200 MHz-Band Broadband Wireless Communication Systems between Portable BS and MSs

ARIB STANDARD

ARIB STD-T103 Version 1.2

Version 1.0 March 28th 2011
Version 1.1 March 19th 2013
Version 1.2 March 17th 2015

Association of Radio Industries and Businesses

General Notes to the English Translation of ARIB Standards and Technical Reports

1. Notes on Copyright

2. Notes on English Translation

- ARIB Standards and Technical Reports are usually written in Japanese. This document is a translation into English of the original document for the purpose of convenience of users. If there are any discrepancies in the content, expressions, etc. between the original document and this translated document, the original document shall prevail.

- ARIB Standards and Technical Reports, in the original language, are made publicly available through web posting. The original document of this translation may have been further revised and therefore users are encouraged to check the latest version at an appropriate page under the following URL: http://www.arib.or.jp/english/index.html.

Foreword

The Association of Radio Industries and Businesses (ARIB) investigates and summarizes the basic technical requirements for various radio systems in the form of "ARIB Standards". These standards are developed with the participation of and through discussions amongst radio equipment manufacturers, telecommunication operators, broadcasting equipment manufacturers, broadcasters and users.

ARIB Standards include "government technical regulations" (mandatory standard) that are set for the purpose of encouraging effective use of frequency and preventing interference with other spectrum users, and "private technical standards" (voluntary standards) that are defined in order to ensure compatibility and adequate quality of radio equipment and broadcasting equipment as well as to offer greater convenience to radio equipment manufacturers, telecommunication operators, broadcasting equipment manufacturers, broadcasters and users.

This ARIB Standard is developed for "200 MHz-band Broadband Wireless Communication Systems between Portable Base Station and Mobile Stations". In order to ensure fairness and transparency in the defining stage, the standard was set by consensus at the ARIB Standard Assembly with the participation of both domestic and foreign interested parties from radio equipment manufacturers, telecommunication operators, broadcasting equipment manufacturers, broadcasters and users.

This standard is the adoption of IEEE Std 802.16-2009, "IEEE Standard for Local and metropolitan area networks – Part 16: Air Interface for Broadband Wireless Access Systems and consists of two modes, Mode 1 and Mode 2. Mode 1 and Mode 2 are based on IEEE Std 802.16-2009 PHY and MAC specifications. Mode 1 is compliant with "Wireless MAN-OFDMA" in IEEE Std 802.16-2009, which provides two sets of parameter choice for FFT size, 512 and 1024. In Mode 2, on the other hand, some parameters are modified from Mode 1 to cover country-specific issues, commonly known as national deviations ("National Deviations"), that is the operational frequency band (200 MHz band) allocated in Japan. In order to cover the "National Deviations" above, pilot subcarriers patterns for channel estimation and the related items are modified in Mode 2. The modified sections due to the "National Deviations" are Sections 4.6.1.2.2, 4.6.2.1.2, 4.6.2.2.2, 4.6.2.3.2, 4.9, 4.10.3.2 and 4.16.2 as described in the column of Mode 2 in the Table of Attachment 1. IEEE Std 802.16-2009, "IEEE Standard for Local and metropolitan area networks Part 16: Air Interface for Broadband Wireless Access Systems", that this standard adopts, is attached.

ARIB sincerely hopes that this ARIB Standard will be widely used by radio equipment manufacturers, telecommunication operators, broadcasting equipment manufacturers, broadcasters and users.

There are original English version and its translated Japanese version of the ARIB STANDARD for 200 MHz-Band Broadband Wireless Communication Systems between Portable Base Station and Mobile Stations.

In case that there is any discrepancy in their contents or expressions, etc. between the original English version and its translated Japanese one, the original English version prevails.

NOTE:

Although this ARIB Standard contains no specific reference to any Essential Industrial Property Rights relating thereto, the holders of such Essential Industrial Property Rights state to the effect that the rights listed in the Attachment 1 and 2, which are the Industrial Property Rights relating to this standard, are held by the parties also listed therein, and that to the users of this standard, in the case of Attachment 1, such holders shall not assert any rights and shall unconditionally grant a license to practice such Industrial Property Rights contained therein, and in the case of Attachment 2, the holders shall grant, under reasonable terms and conditions, a non-exclusive and non-discriminatory license to practice the Industrial Property Rights contained therein. However, this does not apply to anyone who uses this ARIB Standard and also owns and lays claim to any other Essential Industrial Property Rights of which is covered in whole or part in the contents of the provisions of this ARIB Standard.

Attachment1 (selection of option 1)

(N/A)

Attachment2 (selection of option 2)

特許出願人 (PATENT HOLDER)	発明の名称 (NAME OF PATENT)	出願番号等 (REGISTRATION NO. /APPLICATION NO.)	備考 （出願国名） REMARKS
富士通株式会社	ARIB STD-T103 Ver1.0 について包括確認書を提出		
NOKIA CORPORATION	Multiple access radio system	JP19940120447, 3090300	DE, EP, FR, GB, US
	Data transmission in a radio telephone network	JP20050005496, 3842805	AT, CN, DE, EE, EP, ES, FI, FR, GB, IT, NL, SE,

			US
	System for transmitting packet data in radio telephone TDMA systems	JP19950140936, 3880642	AT, CN, CH, DE, EP, FI, FR, GB, IN, IT, NL, SE, US
	Dynamic allocation of radio capacity in a TDMA system	JP19960522063, 3155010	CN, DE, GB, KR, RU, US
	Method for the encryption of data transfer	JP20060152164, 4523569	AU, CN, DE, ES, FI, FR, GB, IN, IT, NL, SE, US
	Allocating idle time to a mobile station	JP20060321955, 4638404	CN, DE, EP, FR, GB, IT, US
	Method of controlling communication resources	JP20000505760, 4065367	BE, CA, CH, CN, DE, FI, EP, ES, FR, GB, IN, IT, MX, NL, PH, SE, US, ZA
	Data transmission method and radio link system	JP20000604550, 3726232	AU, BE, BR, CA, CH, CN, DE, FI, EP, ES, FR, GB, IT, NL, SE, US
	Method for radio resource control	JP19970292991, 3542705	BR, CN, DE, ES, EP, FI, FR, GB, HK, IN, IT, KR, NL, SE
	Data transfer in a mobile telephone network	JP20000510263, 3445577	AT, AU, CN, DE, FI, FR, GB, HK, IT, NL, RU, SE, US
	Hochwald construction of unitary matrix codebooks via eigen coordinate	JP20070550865, 4494478	AU, CA, CN, EP, KR, IN, RU, US, ZA

	transformations		
	Method and arrangement for transferring information in a packet radio service	JP20000604577, 2002539680	CN, DE, EP, FI, FR, GB, IT, KR, US
	Data transmission method and system	JP20040507188, 4533742	None
	Data transmission method, and system	JP20040504417, 4223474	CN, EP, US
	Method and system for supporting the quality of service in wireless networks	JP20090229463, 4477694	CN, EP, DK, DE, GR, IE, IT, NL, US
	System and method for space-time-frequency coding in a multi-antenna transmission system	JP20070538532, 4603584	AU, BR, CA, CN, EP, IN, KR, MX, RU, SG, TH, TW, US, ZA
	Method and a system for reserving transmission capacity	US19990448004, 6831894	None
	CDMA radiotelephone having optimized slotted mode and long code operation	US19940178401, 5491718	US
	System for transmitting packet data in digital cellular time division multiple access (TDMA) air interface	US19990255325, RE39375	AT, AU, CN, DE, EP, FI, FR, GB, IN, IT, NL, SE
	Upstream access method in bidirectional telecommunication system	US19980068211, 6243364	None
	METHOD FOR TRANSMITTING PACKET	EP19980917162, 0988731	AT, AU, DE, EP, US

	SWITCHED DATA IN A MOBILE COMMUNICATIONS SYSTEM		
	Method and system for digital signal transmission	US20000514714, 6353638	EP
	Asymmetric high-speed data transmission apparatus and method in a mobile communications network	US19980945387, 6240076	AT, AU, BE, CA, CH, CN, DE, EP, FR, GB, IT, NL, SE
	Security of packet-mode transmission in a mobile communication system	US19970952046, 6118775	AU, BE, CA, CH, CN, DE, EP, ES, FR, GB, IN, IT, NL, SE
	Method for transmitting packet data with hybrid FEC/ARG type II	US19960725250, 5946320	DE, EP, GB, FR
	Method, device and communication network for avoiding collisions in radio communication	US19960724909, 5966378	AT, AU, CN, DE, FI, FR, GB, IT, NL, RU, SE
	Mobile station and network having hierarchical index for cell broadcast service	US19970915052, 6201974	BR, MX
	Method for scheduling packet data transmission	US20080152597, 8054811	BR, CN, DE, EP, FR, HK, GB, KR, SE
	POINT-TO-MULTIPOINT TRANSMISSION IN A MOBILE COMMUNICATION SYSTEM	EP19990925043, 1078540	AT, DE, ES, FI, FR, GB, IT, NL, PT, SE, US

	Non-zero complex weighted space-time code for multiple antenna transmission	US20010819573, 6748024	CA, CN, KR, MX, RU
	Diversity transmission method and system	US20020009128, 6987959	DE, EP, GB
	METHOD FOR CONTROLLING THE DATA SIGNAL WEIGHTING IN MULTI-ELEMENT TRANSCEIVERS AND CORRESPONDING DEVICES AND TELECOMMUNICATIONS NETWORK	EP20000981265, 1334573	BE, DE, ES, FR, GB, IT, NL, US
	Handover method	US20040492915, 7392051	DE, EP, ES, GB, GR, NL
	High rate transmit diversity transmission and reception	US20040500633, 7436896	CA, CN, EP, ID, IN, KR, MX, RU, ZA
	Method supporting the quality of service of data transmission	US19990237513, 6501741	DE, EP, FI, GB
	Resource allocation in packet-format data transmission	US19990370737, 6553006	None
	System and method for discovering network interface capabilities	US20020293952, 7515561	CN, EP
	Method of determining the	US20020306162,	None

	validity of service announcements	7054619	
	Transmission method and transmitter	US20040770395, 7486739	AR, CN, EP, IN, MY, TW
	TECHNIQUES FOR RESOURCE ALLOCATION FOR STATIONS IN A FDD WIRELESS NETWORK	US20080111958, 2009268645	None
	FRAME STRUCTURES WITH FLEXIBLE PARTITION BOUNDARY FOR WIRELESS NETWORKS	US 20080035262, US 2009213766	None

*: These patents are applied to the part defined by ARIB STD-T103 Ver. 1.0.

Reference

This is the list of Essential Industrial Property Rights (IPRs) filed or applied to countries other than Japan. These are listed here as a reference, as the companies voluntarily informed ARIB of these IPRs.

Contents

Chapter 1 General Descriptions

1.1 Outline

This ARIB STANDARD (hereinafter "this standard") specifies the physical (PHY) layer and the media access control (MAC) layer of the radio equipment of "portable" base stations and mobile stations for the broadband wireless communication systems using 200 MHz band stipulated in the Ministry of Internal Affair and Communications (MIC) Ordinance Regulating Radio Equipment (ORE), Article 49.30. This standard consists of two modes, Mode 1 and Mode 2. Table 1-1 compares major parameters of these two modes. Mode 1 is the subset of "WirelessMAN-OFDMA" in the IEEE802.16™ standard, which provides two sets of parameter choice for FFT size, 512 and 1024. In Mode 2, on the other hand, some parameters are modified from Mode 1 to fit the broadband communication operation in the allocated frequency band (200 MHz band). . Main difference between Mode 1 and Mode 2 is the FFT size and the pilot subcarriers patterns for channel estimation. FFT size is 512 or 1024 in Mode 1 and 1024 only in Mode 2. Regarding the pilot subcarriers pattern, the time interval between the pilot subcarriers in one radio resource unit ("tile" in the WirelessMAN-OFDMA) is longer in Mode 2 compared with Mode 1.

Organization of this standard is as follows. Chapter 2 describes the system overview. Chapter 3 describes the general technical requirements of the radio facilities. Chapter4 specifies technical requirements of physical(PHY) layer of the system. Chapter 5 specifies technical requirements of media access control (MAC) layer of the system. Chapter 6 describes measurement method of the equipment. Chapter 7 summarizes terms and abbreviations used in this standard.

In Chapter 4 (PHY) and Chapter 5 (MAC), specifications of Mode 1 and Mode 2 are separately described in each subsection only when there exist differences between Mode 1 and Mode 2.

1.2 Scope of the Standard

MIC ORE, Article 49.30[1] describes the Japanese 200 MHz-band broadband wireless communication systems, which includes several possible operation forms as shown in Figure 1-1. This standard deals with only form (b) consisting of portable BS and MSs. Figure 1-2 shows the scope of this standard. Specifications of PHY and MAC layers of this system are described in this standard. This system does not cover the features of AAS, MIMO, mini-subchannel, etc that may be supported by the form (a) that is so-called "large-zone system".

Table 1-1 Classification of the specifications in this standard

-2 modes (Mode1 and Mode2), two sets in Mode1 (FFT size 512 and 1024),

and possible DL/UL ratios in each set-

	Mode 1 in this standard (*NOTE1)			Mode 2 in this standard			
Base standard	WirelessMAN-OFDMA (IEEE802.16-2009)						
This standard	Subset of IEEE802.16-2009 (Mobile WiMAX)		Subset of IEEE802.16-2009		pilot patterns changed from IEEE802.16-2009 to fit 200 MHz band operation		
Major Technical Requirements (described in Chapter 3 of this standard)							
Channel bandwidth (Occupied BW)	5 MHz (4.9 MHz)						based on "Technical Requirements for Public Broadband Wireless Communication Systems" (ORE 49_30[1])
Multiple access/ Duplex method	OFDMA/TDD						
Transmit power	5 W (37 dBm)						
Major items of PHY and MAC of this standard (described in Chapters 4 and 5 of this standard)							
FFT size	512		1024		1024		subset of IEEE802.16-2009
subcarrier spacing	10.94 kHz		5.47 kHz		5.47 kHz		
frame length	5 msec		10 msec		10 msec		
pilot pattern	IEEE802.16-2009				changed from IEEE802.16-2009		
MAC	IEEE802.16-2009						
ratio of OFDM symbol numbers in DL and UL	35 : 12	26 : 21	35 : 12	26 : 21	9 : 38	37 : 10	23 : 24	9 : 38
others	Mandatory items specified by Mobile WiMAX (HARQ etc.)		optional				

Mobile WiMAX

*NOTE1: In specific, one set of Mode 1 (Mode 1 with 512 FFT size and 5msec frame length, the left column of Table1-1) of this standard complies with a set of "Mobile WiMAX System Profile" in accordance with Reference [6] as specified in Chapters 4 and 5.

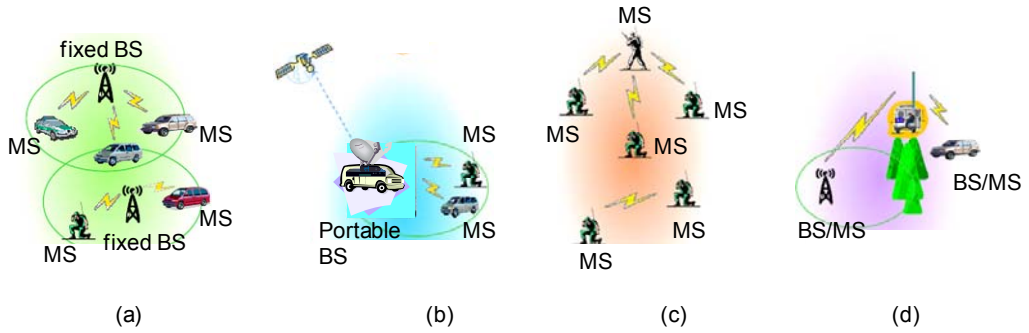

Figure 1-1 Several Operation Forms of Japanese 200-MHz-band Broadband Wireless Communication Systems (a) between fixed BS and MSs, (b) between portable BS and MS, (c) between MSs, (d) radio-relay

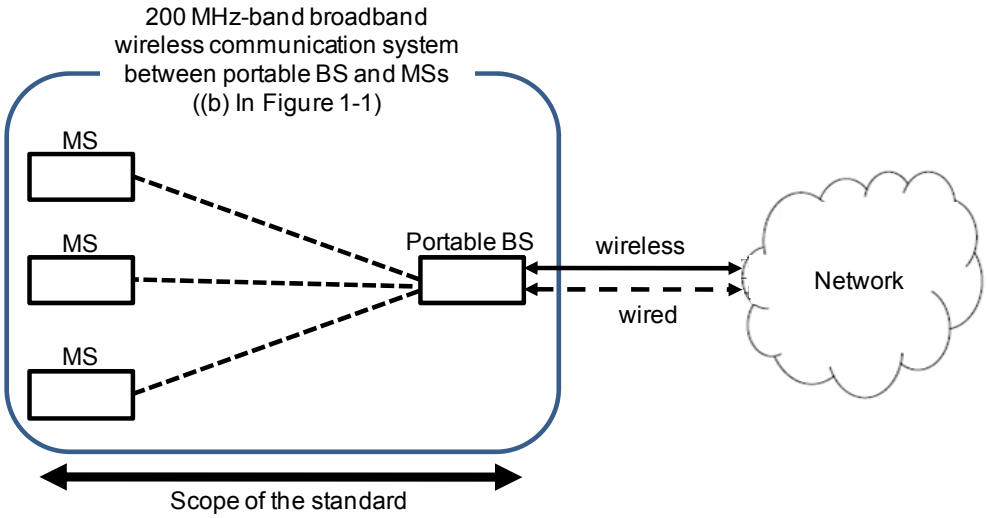

Figure 1-2 Scope of this standard

1.3 Normative References

[1] Japan Ministry of Internal Affairs and Communications (MIC), The Ordinance Regulating Radio Equipment (ORE) in Japanese

[2] Japanese Regulations for Enforcement of Radio Law in Japanese

[3] Japanese Ordinance Concerning Technical Regulations Conformity Certification (OTRCC) of Specified Radio Equipment, Article 2.61 and 2.62 in Japanese

[4] Notification (NT) 307 of MIC, August 25, 2010 in Japanese

[5] IEEE Std 802.16™-2009, IEEE Standard for Local and metropolitan area networks Part 16: Air Interface for Broadband Wireless Access Systems (URL:http://standards.ieee.org/getieee802/download/802.16-2009.pdf)

[6] WiMAX Forum® Air Interface Specification – WiMAX Forum® Mobile System Profile (URL:http://www.wimaxforum.org/sites/wimaxforum.org/files/technical_document/2010/10/WMF-T23-001-R010v09-MSP.pdf)

Chapter 2 General System Outline

2.1 System Overview

This section describes overview of the wireless communication system specified in this standard. As described in Section 1.2, this document covers specifications of Physical layer(PHY) and MAC layer of the Japan 200 MHz-band broadband wireless communication systems between portable base station (BS) and mobile station (MS). Portable BS is a mobile station of the Radio Law, therefore it can be carried to necessary place and set up flexibly. Mobile station is set up near the disaster area, accidental area etc. and video image of the scene can be transmitted from the MS to the Portable BS in real time. This enables appropriate assessment of the situation and results in precise instructions.

Communication/duplex scheme of the system is OFDMA/TDD with the occupied bandwidth of 5 MHz per channel. Basic concept of the system is shown in Fig.2.1-1. Figure 2.1-1 shows one example of the situations that two MSs are communicating the Portable BS by OFDMA/TDD scheme. As shown at the top of Fig.2.1-1, radio resources (d1, d2) consisting of time domain and frequency domain are allocated to the two MSs.

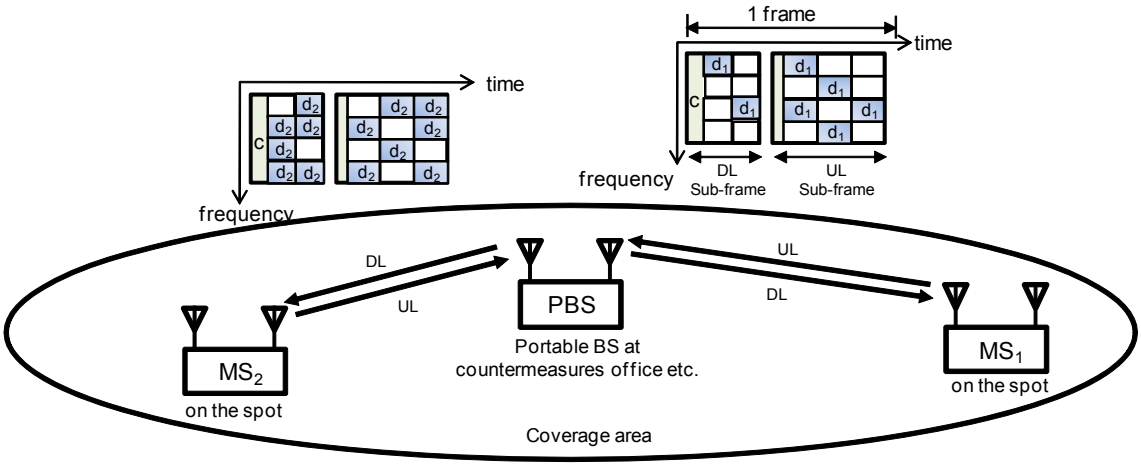

Figure2.1-1 Basic concept of 200 MHz-band broadband wireless communication system between Portable BS and MSs

2.2 System Configuration

The basic system consists of one portable BS and one or multiple MS(s). One set of the system is carried to the area where it is needed. In principle, portable BS is set on the top of building or on the roof-top of a car etc. and being operated without moving. MSs connected to video camera(s)

is(are) situated nearer the spot of disaster, accident etc. One BS and one or multiple MS(s) are communicating and the relevant scene taken by video camera is transmitted from MS(s) to the portable BS in real time.

Chapter 3 General requirements and technical requirements for radio equipment

This chapter provides the regulations and associated technical requirements regarding the radio equipment of the ARIB STD-T103 systems. The requirements are intended for the use in the Japanese 200 MHz band, which are provisions written in Japanese in the regulations in MIC ORE 49.30[1] and related Regulations, Notifications shown in the references [2]-[4] in Section 1.3. The original regulations in Japanese prevail if any ambiguity is found between the requirements in this chapter and the original regulations.

3.1 General Requirements

3.1.1 Communication method (Article 49.30 of [1])

TDD (Time Division Duplex)

3.1.2 Frequency band (Article 49.30 of [1])

170 MHz – 202.5 MHz

3.1.3 Multiplexing method (Article 49.30 of [1])

3.1.3.1 Uplink (The radio transmission from the MS to the Portable BS)

OFDMA（Orthogonal Frequency Division Multiple Access）

3.1.3.2 Downlink (The radio transmission from Portable BS to the MS)

Combination of OFDM (Orthogonal Frequency Division Multiplexing) and TDM (Time Division Multiplexing)

3.1.4 Modulation (Article 49.30 of [1])

3.1.4.1 Uplink

QPSK, 16QAM, 64QAM

3.1.4.2 Downlink

QPSK, 16QAM, 64QAM

3.1.5 Authentication, encryption, information security measure

To prevent unauthorized use of the system, secured protection measures such as user identification by mobile equipment number, user authentication, transmission data encryption, shall be applied as needed.

3.1.6 Electro-Magnetic Compatibility and Protection

In order to mitigate electromagnetic interference between a mobile terminal and a car-mounted electronic device and / or a medical electronic device, adequate measures shall be taken in the equipment.

3.1.7 Compliance to the radio protection policy

The Access Terminal that utilizes radio waveform shall meet the Article 21.3 of [2].

3.1.8 Mobile Identification Number

It is desired that assignment of a mobile identification number and grant for protocol negotiation are determined with consideration of users' sufficient convenience such as flexible network selection, roaming availability, information security measure, radio Access Network policy, etc.

3.1.9 Malfunctioning Mobile Station to abort radio transmission

The system shall be able to apply the following measures independently:

As the base station detects malfunction of a mobile station, it shall be able to enforce the mobile station to abort transmitting radio signals.

As the mobile station detects its malfunction, it shall abort transmitting radio signals upon expiring of its malfunction detection timer.

3.1.10 Data transmission speed(Article 49.30 of [1])

Data transmission speed of the modulated signal shall be 500kbps or more.

3.2 Technical requirements for radio equipment

3.2.1 Transmitter requirements

3.2.1.1 Frequency tolerance (Article 5 of [1])

Less than or equal to 5×10^{-6}

3.2.1.2 Occupied bandwidth (Article 6 of [1])

Less than or equal to 4.9 MHz

3.2.1.3 Output power (Article 49.30 of [1])

Less than or equal to 5 W (37 dBm)

Note: According to ORE, Article 49.30, transmit power is up to 20 W for BS. However, this Standard deals with only the portable system, as described in Chapter 1, by using "portable" BS and MSs. Since portable BS is determined as MS in the Radio Law, the transmit power is limited up to 5 W in this system.

3.2.1.4 Output power tolerance (Article 14 of [1])

Not less than -50 % and not greater than +50 %

3.2.1.5 Adjacent channel leakage power (Article 49.30 of [1])

Less than or equal to -21dBc

(in 4.8 MHz band where 2.6-7.4 MHz offset from the center of the relevant channel)

Less than or equal to -41dBc

(in 4.8 MHz band where 7.6-12.4 MHz offset from the center of the relevant channel)

3.2.1.6 Spurious emission (NT No.307, 2010)

Frequency	Emission Limit
More than 9 kHz and 150 kHz or less	Not exceed 25μW/1kHz, or not exceed 50μW/1kHz for the transmitting equipment with the output power of less than 1W
More than 150 kHz and 30 MHz or less	Not exceed 25μW/10kHz, or not exceed 50μW/10kHz for the transmitting equipment with the output power of less than 1W
More than 30 MHz and 160 MHz or less	Not exceed 25μW/100kHz, or not exceed 50μW/100kHz for the transmitting equipment with the output power of less than 1W
More than 160 MHz and 170 MHz or less	Not exceed -30dBm/100kHz
More than 207.5 MHz and 215 MHz or less	Not exceed -30dBm/100kHz
More than 215 MHz and 1 GHz or less	Not exceed 25μW/100kHz, or not exceed 50μW/100kHz for the transmitting equipment with the output power of less than 1W
More than 1 GHz	Not exceed 25μW/1MHz, or not exceed 50μW/1MHz for the transmitting equipment with the output power of less than 1W

3.2.1.7 Antenna gain (Article 49.30 of [1])

Not exceed 10dBi (In the case EIRP is less than that when 5W output power is applied to the antenna with 10dBi absolute gain, increase of antenna gain compensating EIRP lack is admitted.)

3.2.1.8 Others

Residual emission limit when carrier output is off and Emission from terminal chassis should be taken into consideration.

3.2.2 Receiver requirements

3.2.2.1 Conducted spurious (Article 24 of [1])

Frequency	Emission Limit
9 kHz or greater and less than 150 kHz	Not exceed -54dBm/1kHz
150 kHz or greater and less than 30 MHz	Not exceed -54dBm/10kHz
30 MHz or greater and less than 1 GHz	Not exceed -54dBm/100kHz
1 GHz or greater and less than 2505 MHz	Not exceed -47dBm/1MHz
2505 MHz or greater and less than 2535 MHz	Not exceed -70dBm/1MHz
2535 MHz or greater	Not exceed -47dBm/1MHz

3.2.2.2 Others

Receiver sensitivity, Spurious response, Adjacent channel selectivity, Intermodulation selectivity should be taken into consideration.

Chapter 4 Communication control method for PHY

4.1 Introduction

In this Chapter, the PHY layer specification of the 200 MHz-band Wireless Broadband Communication System is described. As described in Chapter 1, this standard consists of two modes, Mode 1 and Mode 2. Since there are many common specifications between Mode 1 and Mode 2, specifications of Mode 1 and Mode 2 are separately described in each subsection in case that there exist differences between Mode 1 and Mode 2. Parameters used in the 200 MHz-band system are chosen from the parameter set of IEEE802.16-2009.

This chapter specifies the required parameters selected from the basement document of IEEE802.16-2009. Those sets include both the Mobile WiMAX [6] as is basis and a subset of IEEE802.16-2009 for Mode1, and Mode2. The parameters labeled with (optional) shows that is contained in WiMAX as mandatory. Attachment 1 lists those differences in the parameter sets among these three base systems.

Mode 1 based on at least one of the FFT sizes 1024 and 512, and Mode 2 based on the FFT size 1024 shall be supported for the channel bandwidth of 5 MHz.

4.2 OFDMA symbol description, symbol parameters and transmitted signal

4.2.1 Time domain description

Refer to " 8.4.2.1 Time domain description" of [5].

4.2.2 Frequency domain description

Refer to " 8.4.2.2 Frequency domain description" of [5].

4.2.3 Primitive parameters

The following four primitive parameters characterize the OFDMA symbol:

- BW: The nominal channel bandwidth (5 MHz).
- N_{used}: Number of used subcarriers (which includes the DC subcarrier).
- n : Sampling factor. (n= 28/25).
- G: This is the ratio of CP time to "useful" time. The following values shall be supported: 1/32, 1/16, 1/8, and 1/4.

4.2.4 Derived parameters

Refer to " 8.4.2.4 Derived parameters" of [5].

4.2.5 Transmitted signal

Refer to " 8.4.2.5 Transmitted signal" of [5].

4.3 OFDMA basic terms definition

4.3.1 Slot and data region

Refer to " 8.4.3.1 Slot and data region" of [5]. In this system, subcarrier allocation scheme of PUSC (defined later) is used for both UL and DL.

4.3.2 Segment

Refer to " 8.4.3.2 Segment" of [5].

4.3.3 Permutation zone

Refer to " 8.4.3.3 Permutation zone" of [5].

4.3.4 OFDMA data mapping

Refer to " 8.4.3.4 OFDMA data mapping" of [5].

4.4 Frame structure

The duplex method shall be TDD as shown in Section 3.1.1.

4.4.1 TDD frame structure

Refer to " 8.4.4.1 TDD frame structure" of [5].

4.4.2 OFDMA Frame Parameters and Operations

Refer to "8.4.4.3 OFDMA Frame Parameters and Operations" of [5]. In this system, subcarrier allocation scheme of PUSC (defined later) is used for both UL (the link from mobile station to portable base station) and DL (the link from portable base station to mobile station). Duplex method is TDD.

4.4.3 DL frame prefix

Refer to " 8.4.4.4 DL frame prefix" of [5]. In Table 314 in Section 8.4.4.4, DL frame prefix of CC encoding used on DL-MAP or CTC encoding used on DL-MAP are selected as "Coding Indication". In Table 315 in the Section 8.4.4.4 of [5], 512 or 1024 is used as FFT size.

4.4.4 Allocation of subchannels for FCH and DL-MAP and logical subchannel numbering

Refer to " 8.4.4.5 Allocation of subchannels for FCH and DL-MAP and logical subchannel numbering.

4.4.5 UL transmission allocations

Refer to " 8.4.4.6 UL transmission allocations" of [5]. Duplex method is TDD.

4.5 Map message fields and IEs

4.5.1 DL-MAP PHY Synchronization field

Refer to " 8.4.5.1 DL-MAP PHY Synchronization field" of [5].

4.5.2 Frame duration codes

Refer to " 8.4.5.2 Frame duration codes" of [5].

4.5.3 DL-MAP IE format

Refer to " 8.4.5.3 DL-MAP IE format" of [5].

4.5.3.1 DIUC allocation

Refer to " 8.4.5.3.1 DIUC allocation" of [5].

4.5.3.2 HARQ and Sub-MAP Pointer IE (Optional)

Refer to " 8.4.5.3.10 HARQ and Sub-MAP Pointer IE" of [5].

4.5.3.3 HARQ DL MAP IE (Optional)

Refer to " 8.4.5.3.21 HARQ DL MAP IE" of [5].

4.5.3.4 DL HARQ ACK IE (Optional)

Refer to " 8.4.5.3.22 DL HARQ ACK IE" of [5].

4.5.4 UL-MAP IE format

Refer to " 8.4.5.4 UL-MAP IE format" of [5].

4.5.4.1 UIUC allocation

Refer to “ 8.4.5.4.1 UIUC allocation” of [5].

4.5.4.2 CDMA Allocation UL-MAP IE format

Refer to “ 8.4.5.4.3 CDMA Allocation UL-MAP IE format” of [5].

4.5.4.3 HARQ UL-MAP IE (Optional)

Refer to “ 8.4.5.4.22 HARQ UL-MAP IE” of [5].

4.5.4.4 HARQ ACK Region Allocation IE (Optional)

Refer to “ 8.4.5.4.23 HARQ ACK Region Allocation IE” of [5].

4.5.5 Burst profile format

Refer to “ 8.4.5.5 Burst profile format” of [5].

4.5.6 Compressed maps

Refer to “ 8.4.5.6 Compressed maps” of [5].

4.5.6.1 Compressed DL-MAP.

Refer to “ 8.4.5.6.1 Compressed DL-MAP” of [5].

4.5.6.2 Compressed UL-MAP.

Refer to “ 8.4.5.6.2 Compressed UL-MAP” of [5].

4.6 OFDMA subcarrier allocations

Refer to “ 8.4.6 OFDMA subcarrier allocations” of [5]. In this system, sampling factor is 28/25 for the channel bandwidth of 5 MHz and also subcarrier allocation scheme of PUSC (defined in later) is used for both UL and DL

4.6.1 Downlink (DL)

Refer to “ 8.4.6.1 Downlink (DL)” of [5].

4.6.1.1 Preamble

Refer to “ 8.4.6.1.1 Preamble” of [5]. 512 or 1024 is used as FFT size.

4.6.1.1.1 Common SYNC symbol sequence

Refer to “ 8.4.6.1.1.2 Common SYNC symbol sequence” of [5].

4.6.1.2 Symbol structure

4.6.1.2.1 Mode1

Refer to “ 8.4.6.1.2.1 Symbol structure for PUSC” of [5].

4.6.1.2.2 Mode2

A slot in the DL of Mode 2 is composed of four (4) OFDMA symbols and one subchannel. Within each slot, there are 48 data subcarriers and 16 fixed-location pilots. The subchannel is constructed from four (4) DL tiles. Each tile has four successive active subcarriers, and its configuration is illustrated in Figure 4.6.1.2.2-1.

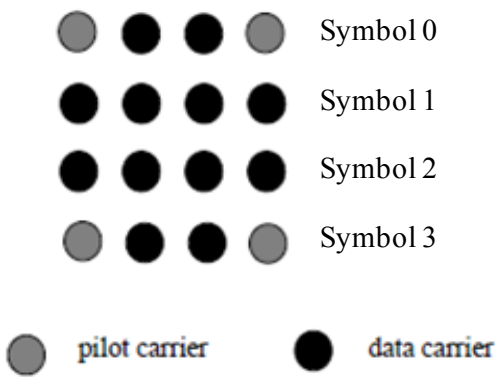

Figure 4.6.1.2.2-1 Description of DL tile in Mode 2

4.6.2 Uplink (UL)

For Mode 1, refer to “ 8.4.6.2 Uplink (UL)” of [5]. Optional PUSC permutation is excluded and FFT size is either 512 or 1024. Parameters for Mode2 are summarized in Table 4.6.2-1.

Table 4.6.2-1 1024-FFT OFDMA UL subcarriers allocations for Mode 2

Parameters	Value	Notes
Number of DC subcarriers	1	
N_{used}	841	Number of all subcarriers used within a symbol
Guard Subcarriers: left, right	92, 91	–
Tile Permutation	{ 3, 52, 35, 67,94, 13, 80, 6, 34, 45, 43, 68, 84, 66, 7, 37, 71, 89, 55, 101, 27, 60, 51, 14, 21, 17, 93, 72, 95, 73, 81, 24, 103, 86, 39, 29, 56, 62, 70, 64, 23, 22, 54, 15, 90, 76, 100, 3, 36, 18, 9, 91, 19, 26, 12, 92, 48, 25, 87, 74, 5, 31, 85, 40, 104, 2, 102, 69, 57, 50, 1, 44, 0, 20, 88, 79, 16, 28, 46, 42, 41, 59, 96, 97, 99, 82, 30, 49, 65, 77, 63, 11, 8, 75, 98, 38, 32, 83, 4, 47, 58, 61, 78, 10, 53}	Used to allocate tiles to subchannels
$N_{subchannels}$	105	–
N_{tiles}	210	–
Number of subcarriers per tile	4	Number of all subcarriers used within tile
Tiles per subchannel	2	–

4.6.2.1 Symbol structure for subchannel

4.6.2.1.1 Mode1

Refer to " 8.4.6.2.1 Symbol structure for subchannel (PUSC)" of [5].

4.6.2.1.2 Mode2

A slot in the UL of Mode 2 is composed of seven (7) OFDMA symbols and one subchannel (two tiles). Within each slot, there are forty eight (48) data subcarriers and eight (8) fixed-location pilots. The subchannel is constructed from two UL tiles. Each tile has four successive active subcarriers, and its configuration is illustrated in Figure 4.6.2.1.2-1.

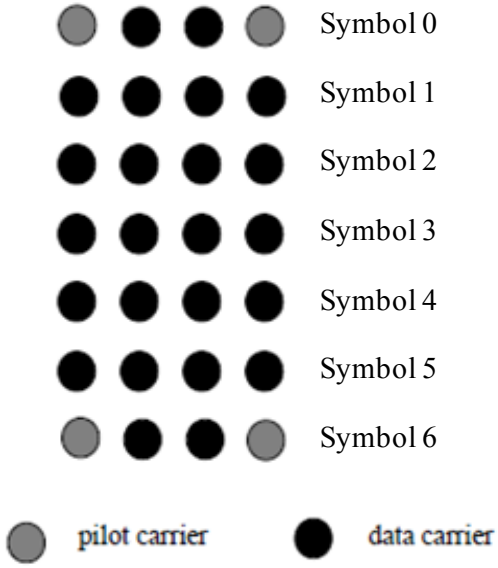

Figure 4.6.2.1.2-1 Description of UL tile in Mode 2

4.6.2.2 Partitioning of subcarriers into subchannels in the UL

4.6.2.2.1 Mode 1

Refer to " 8.4.6.2.2 Partitioning of subcarriers into subchannels in the UL" of [5].

4.6.2.2.2 Mode 2

The usable subcarriers in the allocated frequency band shall be divided into N_{tiles} physical tiles with parameters specified by Table 4.6.2-1.. The allocation of physical tiles to logical tiles in subchannels is performed in the following manner:

Logical tiles are mapped to physical tiles in the FFT using Equation 4.6.2.2.2-1.

$$Tiles(s, n) = N_{subchannels} \cdot n + (Pt[(s+n) \bmod N_{subchannels}] + \text{UL\_PermBase}) \bmod N_{subchannels} \qquad \text{(Eq.4.6.2.2.2-1)}$$

where

$Tiles(s, n)$ is the physical tile index in the FFT with tiles being ordered consecutively from the most negative to the most positive used subcarrier (0 is the starting tile index)

n is the tile index 0,1 in a subchannel

Pt is the tile permutation shown below

Pt= {3, 52, 35, 67,94, 13, 80, 6, 34, 45, 43, 68, 84, 66, 7, 37, 71, 89, 55, 101, 27, 60, 51, 14, 21, 17, 93, 72, 95, 73, 81, 24, 103, 86, 39, 29, 56, 62, 70, 64, 23, 22, 54, 15, 90, 76, 100, 3, 36, 18, 9, 91, 19, 26, 12,

92, 48, 25, 87, 74, 5, 31, 85, 40, 104, 2, 102, 69, 57, 50, 1, 44, 0, 20, 88, 79, 16, 28, 46, 42, 41, 59, 96, 97, 99, 82, 30, 49, 65, 77, 63, 11, 8, 75, 98, 38, 32, 83, 4, 47, 58, 61, 78, 10, 53}

s is the subchannel number in the range 0…$N_{subchannels}$–1

UL_PermBase is an integer value which is assigned by a management entity

$N_{subcarriers}$ is the number of subchannels: 105

After mapping the physical tiles in the FFT to logical tiles for each subchannel, the data subcarriers per slot are enumerated by the following process:

a) After allocating the pilot carriers within each tile, indexing of the data subcarriers within each slot is performed starting from the first symbol at the lowest indexed subcarrier of the lowest indexed tile, continuing in an ascending manner through the subcarriers in the same symbol, then going to the next symbol at the lowest indexed data subcarrier, and so on. Data subcarriers shall be indexed from 0 to 47.

b) The mapping of data onto the subcarriers shall follow Equation 4.6.2.2.2-2. This equation calculates the subcarrier index to which the data constellation point is to be mapped.

$$Subcarrier(n, s) = (n + 13 \cdot s) \bmod N_{subcarriers} \qquad \text{(Eq.4.6.2.2.2-2)}$$

where

$Subcarrier(n, s)$ is the permutated subcarrier index corresponding to data subcarrier

n is a running index 0…47, indicating the data constellation point

s is the subchannel number 0…104

$N_{subcarriers}$ is the number of subcarriers per slot: 48

For example, for subchannel 1 (s = 1), the first data constellation point (n = 0) is mapped onto $Subcarrier(0,1)$ = 13, where 13 is the subcarrier with index 13 according to step a) in this subclause. Considering the PUSC tile structure, it can be seen that this is the second indexed subcarrier on the third symbol within the slot. Similarly, for subchannel 3, the ninth data constellation point (n = 8) is mapped onto $Subcarrier(8, 3)$ =47. According to step a), this is the last indexed subcarrier of the seventh symbol within the slot.

Subcarrier enumeration shall not be applied to the slots in the UL-MAP indicated by either UIUC = 0, UIUC = 11 (Extended-2 UIUC) with Type=8, UIUC = 12, or UIUC = 13.

4.6.2.3 UL permutation example

4.6.2.3.1 Mode 1

Refer to " 8.4.6.2.3 UL permutation example" of [5].

4.6.2.3.2 Mode 2

To illustrate the use of the permutations, an example is provided to clarify the operation of the permutation formula, Equation 4.6.2.2.2-1.

The tiles used for subchannel s = 3 in UL_PermBase = 2 are computed for 1024 FFT size. The relevant parameters characterizing the UL are, therefore, taken from Table 4.6.2-1:

- Number of subchannels: $N_{subchannels}$ = 105
- Number of subcarriers in each OFDMA symbol = 8
- Number of data subcarriers in each slot: $N_{subcarriers}$ = 48
- Tile Permutation ={ 3, 52, 35, 67,94, 13, 80, 6, 34, 45, 43, 68, 84, 66, 7, 37, 71, 89, 55, 101, 27, 60, 51, 14, 21, 17, 93, 72, 95, 73, 81, 24, 103, 86, 39, 29, 56, 62, 70, 64, 23, 22, 54, 15, 90, 76, 100, 3, 36, 18, 9, 91, 19, 26, 12, 92, 48, 25, 87, 74, 5, 31, 85, 40, 104, 2, 102, 69, 57, 50, 1, 44, 0, 20, 88, 79, 16, 28, 46, 42, 41, 59, 96, 97, 99, 82, 30, 49, 65, 77, 63, 11, 8, 75, 98, 38, 32, 83, 4, 47, 58, 61, 78, 10, 53}

Using Equation 4.6.2.2.2-1

The basic series of 105 numbers is { 3, 52, 35, 67,94, 13, 80, 6, 34, 45, 43, 68, 84, 66, 7, 37, 71, 89, 55, 101, 27, 60, 51, 14, 21, 17, 93, 72, 95, 73, 81, 24, 103, 86, 39, 29, 56, 62, 70, 64, 23, 22, 54, 15, 90, 76, 100, 3, 36, 18, 9, 91, 19, 26, 12, 92, 48, 25, 87, 74, 5, 31, 85, 40, 104, 2, 102, 69, 57, 50, 1, 44, 0, 20, 88, 79, 16, 28, 46, 42, 41, 59, 96, 97, 99, 82, 30, 49, 65, 77, 63, 11, 8, 75, 98, 38, 32, 83, 4, 47, 58, 61, 78, 10, 53}.

Apply the permutation due to the selection of the subchannel (s), rotate three times: {78, 10, 53, 3, 52, 35, 67,94, 13, 80, 6, 34, 45, 43, 68, 84, 66, 7, 37, 71, 89, 55, 101, 27, 60, 51, 14, 21, 17, 93, 72, 95, 73, 81, 24, 103, 86, 39, 29, 56, 62, 70, 64, 23, 22, 54, 15, 90, 76, 100, 3, 36, 18, 9, 91, 19, 26, 12, 92, 48, 25, 87, 74, 5, 31, 85, 40, 104, 2, 102, 69, 57, 50, 1, 44, 0, 20, 88, 79, 16, 28, 46, 42, 41, 59, 96, 97, 99, 82, 30, 49, 65, 77, 63, 11, 8, 75, 98, 38, 32, 83, 4, 47, 58, 61}.

Take the first 2 numbers, and add the UL_PermBase (perform modulo operation if needed): {80, 12}.

Finally, add the appropriate shift: {80, 47}.

4.6.2.4 Data subchannel rotation scheme

Refer to " 8.4.6.2.6 Data subchannel rotation scheme" of [5]. Optional PUSC UL is not used.

4.7 OFDMA ranging

Refer to " 8.4.7 OFDMA ranging" of [5].

4.7.1 Initial ranging

Refer to " 8.4.7.1 Initial ranging and HO ranging transmissions" of [5]. HO ranging is not used.

4.7.2 Periodic ranging and BR transmissions

Refer to " 8.4.7.2 Periodic ranging and BR transmissions" of [5].

4.7.3 Ranging codes

Refer to " 8.4.7.3 Ranging codes" of [5].

4.7.4 Ranging and BR opportunity size

Refer to " 8.4.7.4 Ranging and BR opportunity size" of [5].

4.8 Space-time coding (STC) (optional in Mode 1)

Refer to " 8.4.8 Space-time coding (STC) (optional)" of [5].

4.8.1 STC using two antennas

Refer to "8.4.8.1 STC using two antennas" of [5].

4.9 Transmit Diversity Schemes (optional in Mode 2)

4.9.1 Closed-Loop Transmit Diversity using two antennas

4.9.1.1 Interference Assisted Scheme (IAS)

In the case Channel State Information (CSI) is available at the transmitter side, diversity improvement can be achieved, however, with the cost of feedback from receiver to transmitter. Full CSI at the transmitter requires very high amount of feedback, therefore, schemes taking advantage of limited CSI knowledge at the transmitter (few bits feedback) are preferable.

The following figure describes the structure of closed loop IAS based system with an array of 2 transmit antennas ($n_t = 2$).

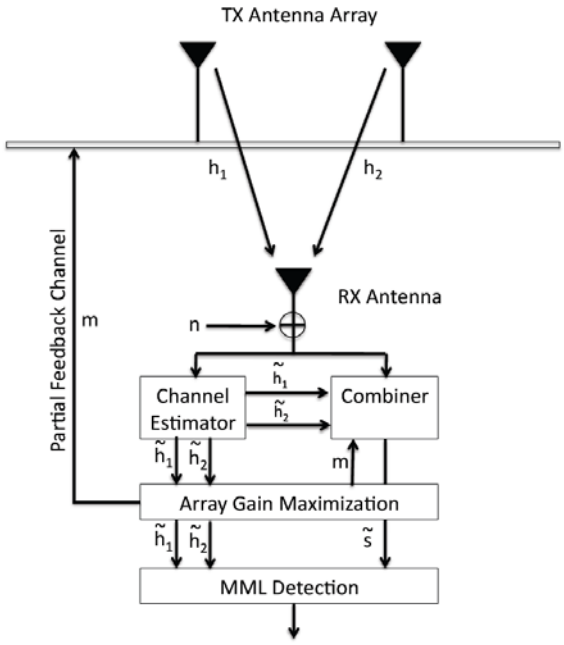

Figure 4.9.2.1-1 Transmit Diversity based on IAS for 2 TX Antennas

The multiple-input-single-output (MISO) channel vector $\mathbf{H} = [h_1\ h_2] \in \mathbb{C}^{1\times nt}$ between the base station and the single antennae receiver (RX) device is considered to be either quasi-static with very low time selectivity, owing to the low Doppler spread inherent to the 200 MHz frequency band.

Upon the reception of Report Command parameter 'Channel Type Request = 100' (for 2 TX antennas) or 'Channel Type Request = 101' (for 4 TX antenna case) transmitted by TX, the RX is enabled to employ IAS.

For a system with 2 TX antennas, a total of two unique transmit vectors G_m, for $m \in \{0,1\}$, with each G_m yielding one single aligned array interference I_{Am}. It should be noted that I_{Am} are functions of the fading channel $\mathbf{H}$, and consequently, can be calculated beforehand. Therefore, I_{Am} can be stored in RX device memory.

After channel estimation is performed by the 'channel estimator' block, the 'array gain maximization' block compares the I_{Am} and selects the one that has the maximum value,

$$\arg\max_{m}(I_{Am}), \forall m \in \{0,1\} \qquad \text{(Eq.4.9.1.1-1)}$$

Following, 'the array gain maximization' block feedbacks the index m, in binary to the TX through the "partial feedback channel" and also sends it to the 'combiner' block, which is collocated in the same RX device.

The following G_m to be transmitted over the channel $\mathbf{H}$ will yield the maximum overall gain (assuming $\mathbf{H}$ does not vary due to the low Doppler frequency of a 200MHz system). For instance, if the feed backed index m from RX is '1', the TX transmits G_1 since it assumes that this transmit

vector produces the most aligned array interference while the 'combiner' block will utilize the weight w_1, when it receives the signal from TX.

Once communication starts with the decided transmit vector G_m, 'channel estimator' block provides the 'combiner' block with channel estimates and the later, after doing the proper signal manipulation (combination), provides symbol estimate to the 'maximum likelihood (MML) detector' block. The 'array gain maximization' block continues to search for the maximum aligned array interference I_{Am} based on the channel estimates it receives constantly from 'channel estimator' block.

The channel **H** is calculated by using pilot subcarriers in IAS operation mode shown below.

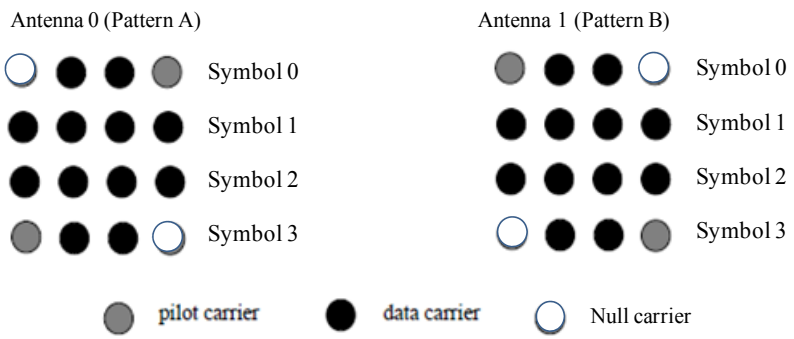

Figure 4.9.2.1-2 Cluster structure for 2 TX antennas in IAS mode (only for Mode 2)

4.9.1.1.1 Array Gain Maximization Block

In the array gain maximization block, the array interference I_{Am} is stored as a function of **H.**

- Array Interference I_{A0}

$$I_{A0} = h_1^* h_2 + h_1 h_2^* \qquad \text{(Eq.4.9.1.1.1-1)}$$

- Array Interference I_{A1}

$$I_{A1} = -h_1^* h_2 - h_1 h_2^* \qquad \text{(Eq.4.9.1.1.1-2)}$$

In order to select the most aligned interference, the 'array gain maximization' block performs

$$\arg\max_m (I_{Am}), \forall m \in \{0,1\} \qquad \text{(Eq.4.9.1.1.1-3)}$$

The index m of the selected interference is feed backed through the 'partial feedback channel' to the transmitter (in 8bits) as well as to the 'combiner block', collocated in the same device.

4.9.1.1.2 IAS Transmitter

- Transmit $G_0 = [\ s\ \ s]$ if the feedback received through 'partial feedback channel' is '00000000';
- Transmit $G_1 = [\ s\ \text{-}s]$ if the feedback received through 'partial feedback channel' is '00000001';

4.9.1.1.3 Combiner Block

Let $H = [h_1\ h_2]$ and ^{T} denotes transpose operation and *n*, the zero-mean additive white Gaussian noise (AWGN).

- If the 'combiner' block receives *m = 0* from the 'array gain maximization' block, the received signal is

$$y = G_0 \cdot H^T + n \qquad \text{(Eq.4.9.1.1.3-1)}$$

The combiner, then, utilizes

$$w_0 = [\ 1\ \ 1] \qquad \text{(Eq.4.9.1.1.3-2)}$$

for the combination. However, for the specific case of m = 0, multiplying vector w_m is not necessary and left here for illustration purposes only. The 'combiner' block performs the following combination,

$$\tilde{S} = yH^* \cdot w_0^T \qquad \text{(Eq.4.9.1.1.3-3)}$$

$$\tilde{S} = y[h_1^* h_2^*] \cdot \begin{pmatrix} 1 \\ 1 \end{pmatrix} \qquad \text{(Eq.4.9.1.1.3-4)}$$

$$\tilde{S} = S(|h_1|^2 + |h_2|^2) + S(h_1^* h_2 + h_1 h_2^*) + nh_1^* + nh_2^* \qquad \text{(Eq.4.9.1.1.3-5)}$$

which is, then, passed to the MML detector to perform the symbol estimation.

- If the 'combiner' block receives *m = 1*, then,

$$y = G_1 \cdot H^T + n \qquad \text{(Eq.4.9.1.1.3-6)}$$

The combiner, then, utilizes

$$w_1 = [\ 1\ \text{-}1] \qquad \text{(Eq.4.9.1.1.3-7)}$$

yielding,

$$\tilde{S} = yH^* \cdot w_1^T \qquad \text{(Eq.4.9.1.1.3-8)}$$

$$\tilde{S} = y[h_1^* h_2^*] \cdot \begin{pmatrix} 1 \\ -1 \end{pmatrix}$$ (Eq.4.9.1.1.3-9)

$$\tilde{S} = S(|h_1|^2 + |h_2|^2) + S(-h_1^* h_2 - h_1 h_2^*) + nh_1^* - nh_2^*$$ (Eq.4.9.1.1.3-10)

This is, then, passed to the MML detector to perform the symbol estimation.

4.9.2 Closed-Loop Transmit Diversity using four antennas

The channel **H** is calculated by using pilot subcarriers in IAS operation mode shown below.

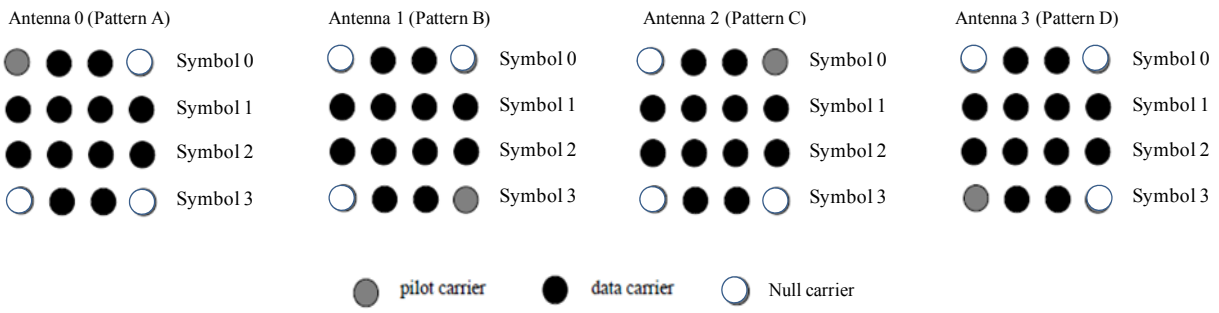

Figure 4.9.2.1-3 Cluster structure for 4 TX antennas in IAS mode (only for Mode 2)

4.9.2.1 Interference Assisted Scheme (IAS)

4.9.2.1.1 Array Gain Maximization Block

In the case of 4 TX antennas, there are eight unique G_m together with their respective I_{Am} as well as w_m, m ∈ {0,1,2,3,4,5,6,7}.

$$I_{A0} = h_1^* h_2 + h_1 h_2^* + h_1^* h_3 + h_1 h_3^* + h_1^* h_4 + h_1 h_4^* + h_2^* h_3 + h_2 h_3^* + h_2^* h_4 + h_2 h_4^* + h_3^* h_4 + h_3 h_4^*$$

(Eq.4.9.2.1.1-1)

$$I_{A1} = -h_1^* h_2 - h_1 h_2^* - h_1^* h_4 - h_1 h_4^* - h_2^* h_3 - h_2 h_3^* - h_3^* h_4 - h_3 h_4^* + h_1^* h_3 + h_1 h_3^* + h_2^* h_4 + h_2 h_4^*$$

(Eq.4.9.2.1.1-2)

$$I_{A2} = -h_1^* h_3 - h_1 h_3^* - h_1^* h_4 - h_1 h_4^* - h_2^* h_3 - h_2 h_3^* - h_2^* h_4 - h_2 h_4^* + h_1^* h_2 + h_1 h_2^* + h_3^* h_4 + h_3 h_4^*$$

(Eq.4.9.2.1.1-3)

$$I_{A3} = -h_1^* h_2 - h_1 h_2^* - h_1^* h_3 - h_1 h_3^* - h_2^* h_4 - h_2 h_4^* - h_3^* h_4 - h_3 h_4^* + h_1^* h_4 + h_1 h_4^* + h_2^* h_3 + h_2 h_3^*$$

(Eq.4.9.2.1.1-4)

$$I_{A4} = -h_1^* h_4 - h_1 h_4^* - h_2^* h_4 - h_2 h_4^* - h_3^* h_4 - h_3 h_4^* + h_1^* h_2 + h_1 h_2^* + h_1^* h_3 + h_1 h_3^* + h_2^* h_3 + h_2 h_3^*$$

(Eq.4.9.2.1.1-5)

$$I_{A5} = -h_1^* h_3 - h_1 h_3^* - h_2^* h_3 - h_2 h_3^* - h_3^* h_4 - h_3 h_4^* + h_1^* h_2 + h_1 h_2^* + h_1^* h_4 + h_1 h_4^* + h_2^* h_4 + h_2 h_4^*$$

(Eq.4.9.2.1.1-6)

$$I_{A6} = -h_1^* h_2 - h_1 h_2^* - h_2^* h_3 - h_2 h_3^* - h_2^* h_4 - h_2 h_4^* + h_1^* h_3 + h_1 h_3^* + h_1^* h_4 + h_1 h_4^* + h_3^* h_4 + h_3 h_4^*$$

(Eq.4.9.2.1.1-7)

$$I_{A7} = -h_1^* h_2 - h_1 h_2^* - h_1^* h_3 - h_1 h_3^* - h_1^* h_4 - h_1 h_4^* + h_2^* h_3 + h_2 h_3^* + h_2^* h_4 + h_2 h_4^* + h_3^* h_4 + h_3 h_4^*$$

(Eq.4.9.2.1.1-8)

In order to select the most aligned interference, the 'array gain maximization' block performs

$$\arg\max_m (I_{Am}), \forall m \in \{0,1,2,3,4,5,6,7\}$$ (Eq.4.9.2.1.1-9)

The index m of the selected interference is feed backed through the 'partial feedback channel' to the transmitter (in 8 bits) as well as to the 'combiner block', collocated in the same device.

4.9.2.1.2 IAS Transmitter

- Transmit $G_0 = [\ s\ \ s\ \ s\ \ s]$ if the feedback received from RX is '00000000';
- Transmit $G_1 = [\ s\ \text{-}s\ \ s\ \text{-}s]$ if the feedback received from RX is '00000001';
- Transmit $G_2 = [\ s\ \ s\ \text{-}s\ \text{-}s]$ if the feedback received from RX is '00000010';
- Transmit $G_3 = [\ s\ \text{-}s\ \text{-}s\ \ s]$ if the feedback received from RX is '00000011';
- Transmit $G_4 = [\ s\ \ s\ \ s\ \text{-}s]$ if the feedback received from RX is '00000100';
- Transmit $G_5 = [\ s\ \ s\ \text{-}s\ \ s]$ if the feedback received from RX is '00000101';
- Transmit $G_6 = [\ s\ \text{-}s\ \ s\ \ s]$ if the feedback received from RX is '00000110';
- Transmit $G_7 = [\text{-}s\ \ s\ \ s\ \ s]$ if the feedback received from RX is '00000111';

4.9.2.1.3 Combiner Block

Let $H = [h_1\ h_2\ h_3\ h_4]$ and $\tilde{H} = H$.

- If the 'combiner' block receives $m = 000$ from the 'array gain maximization' block, it utilizes

$$w_0 = [\ 1\ 1\ 1\ 1]$$

(Eq.4.9.2.1.3-1)

to perform the combination

$$\tilde{S} = yH^* \cdot w_0^T$$

(Eq.4.9.2.1.3-2)

$$\tilde{S} = y[h_1^* h_2^* h_3^* h_4^*] \cdot \begin{pmatrix} 1 \\ 1 \\ 1 \\ 1 \end{pmatrix}$$

(Eq.4.9.2.1.3-3)

$$\tilde{S} = S(|h_1|^2 + |h_2|^2 + |h_3|^2 + |h_4|^2) + S(h_1^* h_2 + h_1 h_2^* + h_1^* h_3 + h_1 h_3^* + h_1^* h_4 + h_1 h_4^* + h_2^* h_3 + h_2 h_3^* + h_2^* h_4 + h_2 h_4^* + h_3^* h_4 + h_3 h_4^*) + nh_1^* + nh_2^* + nh_3^* + nh_4^*$$

(Eq.4.9.2.1.3-4)

which is, then, passed to the MML detector to perform the symbol estimation.

- If the 'combiner' block receives *m = 001* from the 'array gain maximization' block, it utilizes

$$w_1 = [\ 1\ \text{-}1\ \ 1\ \text{-}1]$$

(Eq.4.9.2.1.3-5)

and performs the following combination,

$$\tilde{S} = yH^* \cdot w_1^T$$

(Eq.4.9.2.1.3-6)

$$\tilde{S} = y[h_1^* h_2^* h_3^* h_4^*] \cdot \begin{pmatrix} 1 \\ -1 \\ 1 \\ -1 \end{pmatrix}$$

(Eq.4.9.2.1.3-7)

$$\tilde{S} = S(|h_1|^2 + |h_2|^2 + |h_3|^2 + |h_4|^2) + S(-h_1^* h_2 - h_1 h_2^* - h_1^* h_4 - h_1 h_4^* - h_2^* h_3 - h_2 h_3^* - h_3^* h_4 - h_3 h_4^* + h_1^* h_3 + h_1 h_3^* + h_2^* h_4 + h_2 h_4^*) + nh_1^* - nh_2^* + nh_3^* - nh_4^*$$

(Eq.4.9.2.1.3-8)

which is, then, passed to the MML detector to perform the symbol estimation.

- If the 'combiner' block receives *m = 010* from the 'array gain maximization' block, it utilizes

$$w_2 = [\ 1\ \ 1\ \text{-}1\ \text{-}1]$$

(Eq.4.9.2.1.3-9)

and performs the following combination,

$$\tilde{S} = yH^* \cdot w_2^T$$

(Eq.4.9.2.1.3-10)

$$\tilde{S} = y[h_1^* h_2^* h_3^* h_4^*] \cdot \begin{pmatrix} 1 \\ 1 \\ -1 \\ -1 \end{pmatrix}$$

(Eq.4.9.2.1.3-11)

$$\tilde{S} = S(|h_1|^2 + |h_2|^2 + |h_3|^2 + |h_4|^2) + S(-h_1^* h_3 - h_1 h_3^* - h_1^* h_4 - h_1 h_4^* - h_2^* h_3 - h_2 h_3^* - h_2^* h_4 - h_2 h_4^* + h_1^* h_2 + h_1 h_2^* + h_3^* h_4 + h_3 h_4^*) + nh_1^* + nh_2^* - nh_3^* - nh_4^*$$

(Eq.4.9.2.1.3-12)

which is, then, passed to the MML detector to perform the symbol estimation.

- If the 'combiner' block receives *m = 011* from the 'array gain maximization' block, it utilizes

$$w_3 = [\ 1\ \ -1\ \ -1\ \ \ 1\ ]$$

(Eq.4.9.2.1.3-13)

and performs the following combination,

$$\tilde{S} = yH^* \cdot w_3^T$$

(Eq.4.9.2.1.3-14)

$$\tilde{S} = y[h_1^* h_2^* h_3^* h_4^*] \cdot \begin{pmatrix} 1 \\ -1 \\ -1 \\ 1 \end{pmatrix}$$

(Eq.4.9.2.1.3-15)

$$\tilde{S} = S(|h_1|^2 + |h_2|^2 + |h_3|^2 + |h_4|^2) + S(-h_1^* h_2 - h_1 h_2^* - h_1^* h_3 - h_1 h_3^* - h_2^* h_4 - h_2 h_4^* - h_3^* h_4 - h_3 h_4^* + h_1^* h_4 + h_1 h_4^* + h_2^* h_3 + h_2 h_3^*) + nh_1^* - nh_2^* - nh_3^* + nh_4^*$$

(Eq.4.9.2.1.3-16)

which is, then, passed to the MML detector to perform the symbol estimation.

- If the 'combiner' block receives *m = 100* from the 'array gain maximization' block, it utilizes

$$w_4 = [\ 1\ \ \ 1\ \ \ 1\ \ -1\ ]$$

(Eq.4.9.2.1.3-17)

and performs the following combination,

$$\tilde{S} = yH^* \cdot w_4^T$$

(Eq.4.9.2.1.3-18)

$$\tilde{S} = y[h_1^* h_2^* h_3^* h_4^*] \cdot \begin{pmatrix} 1 \\ 1 \\ 1 \\ -1 \end{pmatrix}$$

(Eq.4.9.2.1.3-19)

$$\tilde{S} = S(|h_1|^2 + |h_2|^2 + |h_3|^2 + |h_4|^2) + S(-h_1^* h_4 - h_1 h_4^* - h_2^* h_4 - h_2 h_4^* - h_3^* h_4 - h_3 h_4^* + h_1^* h_2 + h_1 h_2^* + h_1^* h_3 + h_1 h_3^* + h_2^* h_3 + h_2 h_3^*) + nh_1^* + nh_2^* + nh_3^* - nh_4^*$$

(Eq.4.9.2.1.3-20)

which is, then, passed to the MML detector to perform the symbol estimation.

- If the 'combiner' block receives *m = 101* from the 'array gain maximization' block, it utilizes

$$w_5 = [\ 1\ \ 1\ \ -1\ \ 1\ ]$$

(Eq.4.9.2.1.3-21)

and performs the following combination,

$$\tilde{S} = yH^* \cdot w_5^T$$

(Eq.4.9.2.1.3-22)

$$\tilde{S} = y[h_1^* h_2^* h_3^* h_4^*] \cdot \begin{pmatrix} 1 \\ 1 \\ -1 \\ 1 \end{pmatrix}$$

(Eq.4.9.2.1.3-23)

$$\tilde{S} = S(|h_1|^2 + |h_2|^2 + |h_3|^2 + |h_4|^2) + S(-h_1^* h_3 - h_1 h_3^* - h_2^* h_3 - h_2 h_3^* - h_3^* h_4 - h_3 h_4^* + h_1^* h_2 + h_1 h_2^* + h_1^* h_4 + h_1 h_4^* + h_2^* h_4 + h_2 h_4^*) + nh_1^* + nh_2^* - nh_3^* + nh_4^*$$

(Eq.4.9.2.1.3-24)

which is, then, passed to the MML detector to perform the symbol estimation.

- If the 'combiner' block receives *m = 110* from the 'array gain maximization' block, it utilizes

$$w_6 = [\ 1\ \ -1\ \ 1\ \ 1\ ]$$

(Eq.4.9.2.1.3-25)

and performs the following combination,

$$\tilde{S} = yH^* \cdot w_6^T$$

(Eq.4.9.2.1.3-26)

$$\tilde{S} = y[h_1^* h_2^* h_3^* h_4^*] \cdot \begin{pmatrix} 1 \\ -1 \\ 1 \\ 1 \end{pmatrix}$$

(Eq.4.9.2.1.3-27)

$$\tilde{S} = S(|h_1|^2 + |h_2|^2 + |h_3|^2 + |h_4|^2) + S(-h_1^* h_2 - h_1 h_2^* - h_2^* h_3 - h_2 h_3^* - h_2^* h_4 - h_2 h_4^* + h_1^* h_3 + h_1 h_3^* + h_1^* h_4 + h_1 h_4^* + h_3^* h_4 + h_3 h_4^*) + nh_1^* - nh_2^* + nh_3^* + nh_4^*$$

(Eq.4.9.2.1.3-28)

which is, then, passed to the MML detector to perform the symbol estimation.

- If the 'combiner' block receives *m = 111* from the 'array gain maximization' block, it utilizes

$$w_7 = [-1 \quad 1 \quad 1 \quad 1] \qquad \text{(Eq.4.9.2.1.3-29)}$$

and performs the following combination,

$$\tilde{S} = yH^* \cdot w_7^T \qquad \text{(Eq.4.9.2.1.3-30)}$$

$$\tilde{S} = y[h_1^* h_2^* h_3^* h_4^*] \cdot \begin{pmatrix} -1 \\ 1 \\ 1 \\ 1 \end{pmatrix} \qquad \text{(Eq.4.9.2.1.3-31)}$$

$$\tilde{S} = S(|h_1|^2 + |h_2|^2 + |h_3|^2 + |h_4|^2) + S(-h_1^* h_2 - h_1 h_2^* - h_1^* h_3 - h_1 h_3^* - h_1^* h_4 - h_1 h_4^* + h_2^* h_3 + h_2 h_3^* + h_2^* h_4 + h_2 h_4^* + h_3^* h_4 + h_3 h_4^*) - nh_1^* + nh_2^* + nh_3^* + nh_4^*$$

(Eq.4.9.2.1.3-32)

which is, then, passed to the MML detector to perform the symbol estimation.

4.9.3 IAS with Maximum Ratio Combining (MRC)

When two antennas are available in the receive terminal, maximum ratio combining (MRC) can be utilized, therefore significantly enhancing link reliability.

In order to use MRC, little modification is necessary. The 'Array Gain Maximization' block, now, performs

$$\arg\max_m (I_{Am} + I'_{Am}), \forall m \in \{0,1\} \qquad \text{(Eq.4.9.3-1)}$$

for 2 TX antennas, and

$$\arg\max_m (I_{Am} + I'_{Am}), \forall m \in \{0,1,2,3,4,5,6,7\} \qquad \text{(Eq.4.9.3-2)}$$

for 4 TX antennas. Here, I_{Am} is the array interference in the first RX antenna, given in the previous sections and I'_{Am} represents the array interferences in the second RX antenna. Since the channel to the second RX antenna is given by **H** = [h_3 h_4], for two TX antennas, and **H** = [h_5 h_6 h_7 h_8], for 4 TX antennas, I'_{Am} becomes

$$I_{A0} = h_3^* h_4 + h_3 h_4^* \qquad \text{(Eq.4.9.3-3)}$$

$$I_{A1} = -h_3^* h_4 - h_3 h_4^* \qquad \text{(Eq.4.9.3-4)}$$

or

$$I_{A0} = h_5^* h_6 + h_5 h_6^* + h_5^* h_7 + h_5 h_7^* + h_5^* h_8 + h_5 h_8^* + h_6^* h_7 + h_6 h_7^* + h_6^* h_8 + h_6 h_8^* + h_7^* h_8 + h_7 h_8^*$$

(Eq.4.9.3-5)

$$I_{A1} = -h_5^* h_6 - h_5 h_6^* - h_5^* h_8 - h_5 h_8^* - h_6^* h_7 - h_6 h_7^* - h_7^* h_8 - h_7 h_8^* + h_5^* h_7 + h_5 h_7^* + h_6^* h_8 + h_6 h_8^*$$

(Eq.4.9.3-6)

$$I_{A2} = -h_5^* h_7 - h_5 h_7^* - h_5^* h_8 - h_5 h_8^* - h_6^* h_7 - h_6 h_7^* - h_6^* h_8 - h_6 h_8^* + h_5^* h_6 + h_5 h_6^* + h_7^* h_8 + h_7 h_8^*$$

(Eq.4.9.3-7)

$$I_{A3} = -h_5^* h_6 - h_5 h_6^* - h_5^* h_7 - h_5 h_7^* - h_6^* h_8 - h_6 h_8^* - h_7^* h_8 - h_7 h_8^* + h_5^* h_8 + h_5 h_8^* + h_6^* h_7 + h_6 h_7^*$$

(Eq.4.9.3-8)

$$I_{A4} = -h_5^* h_8 - h_5 h_8^* - h_6^* h_8 - h_6 h_8^* - h_7^* h_8 - h_7 h_8^* + h_5^* h_6 + h_5 h_6^* + h_5^* h_7 + h_5 h_7^* + h_6^* h_7 + h_6 h_7^*$$

(Eq.4.9.3-9)

$$I_{A5} = -h_5^* h_7 - h_5 h_7^* - h_6^* h_7 - h_6 h_7^* - h_7^* h_8 - h_7 h_8^* + h_5^* h_6 + h_5 h_6^* + h_5^* h_8 + h_5 h_8^* + h_6^* h_8 + h_6 h_8^*$$

(Eq.4.9.3-10)

$$I_{A6} = -h_5^* h_6 - h_5 h_6^* - h_6^* h_7 - h_6 h_7^* - h_6^* h_8 - h_6 h_8^* + h_5^* h_7 + h_5 h_7^* + h_5^* h_8 + h_5 h_8^* + h_7^* h_8 + h_7 h_8^*$$

(Eq.4.9.3-11)

$$I_{A7} = -h_5^* h_6 - h_5 h_6^* - h_5^* h_7 - h_5 h_7^* - h_5^* h_8 - h_5 h_8^* + h_6^* h_7 + h_6 h_7^* + h_6^* h_8 + h_6 h_8^* + h_7^* h_8 + h_7 h_8^* .$$

(Eq.4.9.3-12)

The m that maximizes the summation (I_{Am} + I'_{Am}) is feedbacked to the transmitter (in 8 bits) and to the 'combiner' block, which, will combine the received signal, just as described in the previous sections, in order to deliver $\tilde{S}+\tilde{S}`$ to the ML detector. Note that $\tilde{S}$ is given in the previous sections and $\tilde{S}`$ is given by

$$\tilde{S}' = y' H^* \cdot w_m^T$$

(Eq.4.9.3-13)

with y' being the signal received by the second RX antenna and **H** = [h_3 h_4], for 2TX, or **H** = [h_5 h_6 h_7 h_8], for 4 TX.

4.9.4 Relevant changes

When using the scheme specified in Section4.9, the following changes shall be made.

Table 11.11 REP-REQ management message encodings of [5] is replaced with the following Table.

Name	Type	Length	Value
Channel Type Request	1.3	1	000: Normal subchannel. 001: Band AMC channel. 010: Safety channel. 011: Sounding. 100: Array interference (2 TX antenna) 101: Array interference (4 TX antenna)

Table 11.12 REP-RSP management message encodings of [5] is replaced with the following Table.

REP-REQ Channel type request	Name	Type	Length	Value
Channel Type = 000	Normal Subchannel Report	2.1	1	5 LSBs CINR measurement report. The rest of the bits are reserved (set to zero).
Channel Type = 001	Band AMC Report	2.2	4	Bit 31–Bit 20: Band Indication Bitmap (Bit 31 for Band with index 11, Bit 30 for Band with index 10, ... Bit 20 for Band with index 0) Bit 19–Bit 0: CINR reports for 4 selected Bands. (5bits per each band. Band with lower index has lower significant 5 bits)
Channel Type = 001	Enhanced Band AMC Report	2.4	5	Bit 39–Bit 28: Band Indication Bitmap (Bit 39 for Band with index 11, Bit 38 for Band with index 10 ... Bit 28 for Band with index 0) Bit 27–Bit 3: CINR reports for 5 selected Bands. (5 bits per each band. Band with lower index has lower

				significant 5 bits) Bit 2–Bit 0: Reserved
Channel Type = 010	Safety Channel Report	2.3	5	Bit 39–Bit 20: Reported Bin Indication Bitmap (Bit 39 for Bin with index 19, Bit 38 for Bin with index 18 ... Bit 20 for Bin with index 0) Bit 19–Bit 0: CINR reports for 4 selected Bins. (5 bits per each bin. Bin with lower index has lower significant 5 bits)
Channel Type = 011	Sounding Report	2.5	1	Average SINR. 8 bits in the same format used in 8.4.12.3.
Channel Type = 100	Array Interference Report for 2 TX antennas	2.30	1	The most aligned interference. Bit 8: aligned interference index for 2TX.
Channel Type = 101	Array Interference Report for 4 TX antennas	2.31	1	The most aligned interference. Bit 8-6: aligned interference index for 4TX.

4.10 Channel coding

Refer to “ 8.4.9 Channel coding” of [5].

4.10.1 Randomization

Refer to “ 8.4.9.1 Randomization” of [5].

4.10.2 Encoding

Refer to “ 8.4.9.2 Encoding” of [5].

4.10.2.1 Convolutional coding (CC)

Refer to “ 8.4.9.2.1 Convolutional coding (CC) (excluding 8.4.9.2.1.1)” of [5].

4.10.2.2 Convolutional turbo codes (CTCs) (optional)

Refer to “ 8.4.9.2.3 Convolutional turbo codes (CTCs) (optional)” of [5].

4.10.3 Interleaving

4.10.3.1 Mode 1

Refer to “ 8.4.9.3 Interleaving” of [5].

4.10.3.2 Mode 2

Refer to “ 8.4.9.3 Interleaving” of [5]. However, value of N_{cbps} in the equations shall be replaced by eighteen (18).

4.10.4 Modulation

Refer to “ 8.4.9.4 Modulation” of [5].

4.10.4.1 Subcarrier randomization

Refer to “ 8.4.9.4.1 Subcarrier randomization” of [5].

4.10.4.2 Data modulation

Refer to “ 8.4.9.4.2 Data modulation” of [5].

4.10.4.3 Pilot modulation

Refer to “ 8.4.9.4.3 Pilot modulation” of [5].

4.10.4.4 Example of OFDMA UL CC encoding

Refer to “ 8.4.9.4.4 Example of OFDMA UL CC encoding” of [5].

4.10.5 Repetition

Refer to “ 8.4.9.5 Repetition” of [5].

4.10.6 Zone boosting

Refer to “ 8.4.9.6 Zone boosting” of [5].

4.11 Control mechanisms

4.11.1 Synchronization

Refer to “ 8.4.10.1 Synchronization” of [5].

4.11.1.1 Network synchronization (Optional)

Refer to “ 8.4.10.1.1 Network synchronization” of [5].

4.11.1.2 SS synchronization

Refer to “ 8.4.10.1.2 SS synchronization” of [5].

4.11.2 Ranging

Refer to “ 8.4.10.2 Ranging” of [5].

4.11.3 Power control

Refer to “ 8.4.10.3 Power control” of [5].

4.11.3.1 Closed-loop power control.

Refer to “ 8.4.10.3.1 Closed-loop power control” of [5].

4.11.3.2 Optional open-loop power control

Refer to “ 8.4.10.3.2 Optional open-loop power control” of [5].

4.12 Fast-feedback channels

Refer to “ 8.4.11 Fast-feedback channels” of [5].

4.12.1 Fast DL measurement feedback

Refer to “ 8.4.11.1 Fast DL measurement feedback” of [5].

4.12.2 Effective CINR feedback for fast-feedback channel

Refer to “ 8.4.11.4 Effective CINR feedback for fast-feedback channel” of [5].

4.12.3 Enhanced fast-feedback channels

Refer to “ 8.4.11.5 Enhanced fast-feedback channels” of [5].

4.12.4 Fast DL measurement feedback for enhanced fast-feedback channel

Refer to “ 8.4.11.6 Fast DL measurement feedback for enhanced fast-feedback channel” of [5].

4.12.5 Anchor BS report

Refer to “ 8.4.11.9 Anchor BS report” of [5].

4.12.6 UEP fast-feedback.

Refer to “ 8.4.11.10 UEP fast-feedback” of [5].

4.12.7 Band AMC differential CINR feedback for enhanced fast-feedback channel.

Refer to “ 8.4.11.11 Band AMC differential CINR feedback for enhanced fast-feedback channel” of [5].

4.12.8 Indication flag feedback

Refer to “ 8.4.11.12 Indication flag feedback” of [5].

4.12.9 Primary and secondary fast-feedback channels

Refer to “ 8.4.11.13 Primary and secondary fast-feedback channels” of [5].

4.12.10 MAP ACK Channel

Refer to “ 8.4.11.16 MAP ACK Channel” of [5].

4.12.11 MAP NACK Channel

Refer to “ 8.4.11.17 MAP NACK Channel” of [5].

4.13 Channel quality measurements

4.13.1 Introduction

Refer to “ 8.4.12.1 Introduction” of [5].

4.13.2 RSSI mean and standard deviation

Refer to “ 8.4.12.2 RSSI mean and standard deviation” of [5].

4.13.3 CINR mean and standard deviation

Refer to “ 8.4.12.3 CINR mean and standard deviation” of [5].

4.13.4 Optional frequency selectivity characterization

Refer to “ 8.4.12.4 Optional frequency selectivity characterization” of [5].

4.14 Transmitter requirements

4.14.1 TX power level control

Refer to " 8.4.13.1 Tx power level control" of [5].

4.14.2 Calculation of RMS constellation error

Refer to " 8.4.13.3.3 Calculation of RMS constellation error" of [5].

4.14.3 Unmodulated subcarrier errors for SS

Refer to " 8.4.13.3.4 Unmodulated subcarrier errors for SS" of [5].

4.14.4 Transmitter reference timing accuracy.

Refer to "8.4.13.4 Transmitter reference timing accuracy" of [5].

4.15 Receiver requirements

4.15.1 Receiver adjacent and nonadjacent channel rejection.

Refer to " 8.4.14.2 Receiver adjacent and nonadjacent channel rejection" of [5].

4.15.2 Receiver maximum input signal

Refer to " 8.4.14.3.1 SS receiver maximum input signal" of [5].

4.15.3 Receiver maximum tolerable signal

Refer to " 8.4.14.4.1 SS receiver maximum tolerable signal" of [5].

4.16 PHY Parameters and constants

Refer to " 10.3 PHY-specific values" of [5]. Regarding the ratio of subframe length of DL and UL, the ratio is defined by the ratio of the number of OFDM symbol in the DL and UL, respectively. Total number of OFDM symbol in the frame unit is 47 for both Mode 1 and Mode 2.

4.16.1 Mode 1

FFT-size 512, chosen out of (35:12) , (26:21)

FFT-size 1024, chosen out of (35:12), (26:21), (9:38)

4.16.2 Mode2

chosen out of (37:10), (23:24), (9:38)

Chapter 5 Communication control method for MAC

5.1 Introduction

In this chapter, the Medium Access Control (MAC) Layer specification of the 200 MHz-band Wireless Broadband Communication System is described. Service-specific Convergence Sublayer (CS) and MAC common part sublayer are described in 5.2 and 5.3 respectively.

This chapter specifies the required parameters selected from the basement document of IEEE802.16-2009. Those sets include both the Mobile WiMAX [6] as is basis and a subset of IEEE802.16-2009 for Mode1, and Mode2. The parameters labeled with (optional) shows that is contained in WiMAX as mandatory. Appendix X lists those differences in the parameter sets among these three base systems.

5.2 Service-specific CS

5.2.1 Packet CS

5.2.1.1 MAC SDU format

Refer to " 5.2.1 MAC SDU format" of [5].

5.2.1.2 Classification

Refer to " 5.2.2 Classification" of [5].

5.2.1.3 Payload header suppression (PHS)

Refer to " 5.2.3 Payload header suppression (PHS)" of [5].

5.2.1.3.1 PHS operation

Refer to " 5.2.3.1 PHS operation" of [5].

5.2.1.3.2 PHS signaling

Refer to " 5.2.3.2 PHS signaling" of [5].

5.2.1.4 IP specific part

Refer to " 5.2.5 IP specific part" of [5].

5.2.1.4.1 IP CS PDU format

Refer to " 5.2.5.1 IP CS PDU format" of [5].

5.3 MAC common part sublayer

5.3.1 Data/Control plane

5.3.1.1 Addressing and connections

5.3.1.1.1 Point-to-multipoint (PMP) operation overview

Refer to “6.1 Point-to-multipoint (PMP) operation overview” of [5].

5.3.1.2 MAC PDU formats

Refer to “ 6.3.2 MAC PDU formats” of [5].

5.3.1.2.1 MAC header formats

Refer to “ 6.3.2.1 MAC header formats” of [5].

5.3.1.2.1.1 Generic MAC header

Refer to “ 6.3.2.1.1 Generic MAC header” of [5].

5.3.1.2.1.2 MAC header without payload

Refer to “ 6.3.2.1.2 MAC header without payload” of [5].

5.3.1.2.1.2.1 Bandwidth request (BR) header

Refer to “ 6.3.2.1.2 .1.1 Bandwidth request(BR) header” of [5].

5.3.1.2.2 MAC subheaders and special payloads

Refer to “ 6.3.2.2 MAC subheaders and special payloads” of [5].

5.3.1.2.2.1 Fragmentation subheader (FSH)

Refer to “ 6.3.2.2.1 Fragmentation subheader (FSH)” of [5].

5.3.1.2.3 MAC management messages

Refer to “ 6.3.2.3 MAC management messages” of [5].

5.3.1.2.3.1 DCD (DL channel descriptor) message

Refer to “ 6.3.2.3.1 DCD (DL channel descriptor) message” of [5].

5.3.1.2.3.2 DL-MAP (Downlink map) message

Refer to “ 6.3.2.3.2 DL-MAP (Downlink map) message” of [5].

5.3.1.2.3.3 UCD (UL channel descriptor) message

Refer to “ 6.3.2.3.3 UCD (UL channel descriptor) message” of [5].

5.3.1.2.3.4 UL-MAP (UL map) message

Refer to “ 6.3.2.3.4 UL-MAP (UL map) message” of [5].

5.3.1.2.3.5 RNG-REQ (ranging request) message

Refer to “ 6.3.2.3.5 RNG-REQ (ranging request) message” of [5].

5.3.1.2.3.6 RNG-RSP (ranging response) message

Refer to “ 6.3.2.3.6 RNG-RSP (ranging response) message” of [5].

5.3.1.2.3.7 REG-REQ (registration request) message

Refer to “ 6.3.2.3.7 REG-REQ (registration request) message” of [5].

5.3.1.2.3.8 REG-RSP (registration response) message

Refer to “ 6.3.2.3.8 REG-RSP (registration response) message” of [5].

5.3.1.2.3.9 DSA-REQ message

Refer to “ 6.3.2.3.10　DSA-REQ message” of [5].

5.3.1.2.3.9.1 BS-Initiated DSA

Refer to “ 6.3.2.3.10.2　BS-Initiated DSA” of [5].

5.3.1.2.3.10 DSA-RSP message

Refer to “ 6.3.2.3.11 DSA-RSP message” of [5].

5.3.1.2.3.10.1 BS-Initiated DSA

Refer to “ 6.3.2.3.11.2　BS-Initiated DSA” of [5].

5.3.1.2.3.11 DSA-ACK message

Refer to “ 6.3.2.3.12 DSA-ACK message” of [5].

5.3.1.2.3.12 SBC-REQ (SS basic capability request) message

Refer to “ 6.3.2.3.23 SBC-REQ (SS basic capability request) message” of [5].

5.3.1.2.3.13 SBC-RSP (SS basic capability response) message

Refer to “ 6.3.2.3.24 SBC-RSP (SS basic capability response) message” of [5].

5.3.1.2.3.14 DREG-CMD (de/reregister command) message

Refer to “ 6.3.2.3.26 DREG-CMD (de/reregister command) message” of [5].

5.3.1.2.3.15 ARQ-Feedback message

Refer to “ 6.3.2.3.30 ARQ-Feedback message” of [5].

5.3.1.2.3.16 ARQ-Discard message

Refer to “ 6.3.2.3.31 ARQ-Discard message” of [5].

5.3.1.2.3.17 ARQ-Reset message

Refer to “ 6.3.2.3.32 ARQ-Reset message” of [5].

5.3.1.2.3.18 Channel Measurement REP-REQ/RSP (report request/response)

Refer to “ 6.3.2.3.33 Channel Measurement REP-REQ/RSP (report request/response)” of [5].

5.3.1.2.3.19 DREG-REQ (SS deregistration request) message

Refer to “ 6.3.2.3.37 DREG-REQ(SS deregistration request) messge” of [5].

5.3.1.2.3.20 HARQ MAP message(Optional)

Refer to “ 6.3.2.3.38 HARQ MAP message” of [5]”

5.3.1.3 Construction and transmission of MAC PDUs

Refer to “ 6.3.3 Construction and transmission of MAC PDUs” of [5].

5.3.1.3.1 Conventions

Refer to “ 6.3.3.1 Conventions” of [5].

5.3.1.3.2 Concatenation

Refer to “ 6.3.3.2 Concatenation” of [5].

5.3.1.3.3 Fragmentation

Refer to “ 6.3.3.3 Fragmentation” of [5].

5.3.1.3.3.1 Non-ARQ connections

Refer to “ 6.3.3.3.1 Non-ARQ connections” of [5].

5.3.1.3.3.2 ARQ-enabled connections

Refer to “ 6.3.3.3.2 ARQ-enabled connections” of [5].

5.3.1.3.4 CRC calculation

Refer to “ 6.3.3.5 CRC calculation” of [5].

5.3.1.3.5 CRC32 calculation for OFDMA mode

Refer to “ 6.3.3.5.2 CRC32 calculation for OFDMA mode” of [5].

5.3.1.3.6 Padding

Refer to “ 6.3.3.7 Padding” of [5].

5.3.1.4 ARQ mechanism

Refer to “ 6.3.4 ARQ mechanism” of [5].

5.3.1.4.1 ARQ block usage

Refer to “ 6.3.4.1 ARQ block usage” of [5].

5.3.1.4.2 ARQ Feedback IE format

Refer to “ 6.3.4.2 ARQ Feedback IE format” of [5].

5.3.1.4.3 ARQ parameters

Refer to “ 6.3.4.3 ARQ parameters” of [5].

5.3.1.4.3.1 ARQ_BSN_MODULUS

Refer to “ 6.3.4.3.1 ARQ_BSN_MODULUS” of [5].

5.3.1.4.3.2 ARQ_WINDOW_SIZE

Refer to “ 6.3.4.3.2 ARQ_WINDOW_SIZE” of [5].

5.3.1.4.3.3 ARQ_BLOCK_LIFETIME

Refer to “ 6.3.4.3.3 ARQ_BLOCK_LIFETIME” of [5].

5.3.1.4.3.4 ARQ_RETRY_TIMEOUT

Refer to “ 6.3.4.3.4 ARQ_RETRY_TIMEOUT” of [5].

5.3.1.4.3.5 ARQ_SYNC_LOSS_TIMEOUT

Refer to “ 6.3.4.3.5 ARQ_SYNC_LOSS_TIMEOUT” of [5].

5.3.1.4.3.6 ARQ_RX_PURGE_TIMEOUT

Refer to “ 6.3.4.3.6 ARQ_RX_PURGE_TIMEOUT” of [5].

5.3.1.4.3.7 ARQ_BLOCK_SIZE

Refer to “ 6.3.4.3.7 ARQ_BLOCK_SIZE” of [5].

5.3.1.4.4 ARQ procedures

5.3.1.4.4.1 ARQ state machine variables

Refer to “ 6.3.4.4.1 ARQ state machine variables” of [5].

5.3.1.4.5 ARQ operation

Refer to “ 6.3.4.6 ARQ operation” of [5].

5.3.1.4.6.1 Sequence number comparison

Refer to “ 6.3.4.6.1 Sequence number comparison” of [5].

5.3.1.4.6.2 Transmitter state machine

Refer to “ 6.3.4.6.2 Transmitter state machine” of [5].

5.3.1.4.6.3 Receiver state machine

Refer to “ 6.3.4.6.3 Receiver state machine” of [5].

5.3.1.5 Scheduling services

Refer to “ 6.3.5 Scheduling services” of [5].

5.3.1.5.1 Outbound transmission scheduling

Refer to “ 6.3.5.1 Outbound transmission scheduling” of [5].

5.3.1.5.2 UL request/grant scheduling

Refer to “ 6.3.5.2 UL request/grant scheduling” of [5].

5.3.1.5.2.1 Unsolicited grant service (UGS)

Refer to “ 6.3.5.2.1 Unsolicited grant service (UGS)” of [5].

5.3.1.5.2.2 Best effort (BE) service

Refer to “ 6.3.5.2.4 Best effort (BE) service” of [5].

5.3.1.6 Bandwidth allocation and request mechanisms

Refer to “ 6.3.6 Bandwidth allocation and request mechanisms” of [5].

5.3.1.6.1 Requests

Refer to “ 6.3.6.1 Requests” of [5].

5.3.1.6.2 Grants

Refer to “ 6.3.6.2 Grants” of [5].

5.3.1.6.3 Contention-based CDMA BRs

Refer to “ 6.3.6.5 Contention-based CDMA BRs for WirelessMAN-OFDMA” of [5].

5.3.1.7 MAC support of PHY

Refer to “ 6.3.7 MAC support of PHY” of [5].

5.3.1.7.1 Time division duplex (TDD)

Refer to “ 6.3.7.2 Time division duplex (TDD)” of [5].

5.3.1.7.2 DL-MAP message

Refer to “ 6.3.7.3 DL-MAP message” of [5].

5.3.1.7.3 UL-MAP message

Refer to “ 6.3.7.4 UL-MAP message” of [5].

5.3.1.7.3.1 UL timing

Refer to “ 6.3.7.4.1 UL timing” of [5].

5.3.1.7.3.2 UL allocations

Refer to “ 6.3.7.4.2 UL allocations” of [5].

5.3.1.7.3.3 UL interval definition

Refer to “ 6.3.7.4.3 UL interval definition” of [5].

5.3.1.7.4 Map relevance and synchronization.

Refer to “ 6.3.7.5 Map relevance and synchronization” of [5].

5.3.1.7.4.1 OFDMA PHY

Refer to “ 6.3.7.5.3 WirelessMAN-OFDMA PHY” of [5].

5.3.1.8 Network entry and initialization

Refer to “ 6.3.9 Network entry and initialization” of [5].

5.3.1.8.1 Scanning and synchronization to the DL

Refer to “ 6.3.9.1 Scanning and synchronization to the DL” of [5].

5.3.1.8.2 Obtain DL parameters

Refer to “ 6.3.9.2 Obtain DL parameters” of [5].

5.3.1.8.3 Obtain UL parameters

Refer to “ 6.3.9.3 Obtain UL parameters” of [5].

5.3.1.8.4 Message flows during scanning and UL parameter acquisition

Refer to “ 6.3.9.4 Message flows during scanning and UL parameter acquisition” of [5].

5.3.1.8.5 Initial ranging and automatic adjustments

Refer to “ 6.3.9.5 Initial ranging and automatic adjustments” of [5].

5.3.1.8.5.1 Contention-based initial ranging and automatic adjustments

Refer to “ 6.3.9.5.1 Contention-based initial ranging and automatic adjustments” of [5].

5.3.1.8.6 Ranging parameter adjustment

Refer to “ 6.3.9.6 Ranging parameter adjustment” of [5].

5.3.1.8.7 Negotiate basic capabilities

Refer to “ 6.3.9.7 Negotiate basic capabilities” of [5].

5.3.1.8.8 Registration

Refer to “ 6.3.9.9 Registration” of [5].

5.3.1.8.9 Establishing provisioned connections

Refer to “ 6.3.9.13 Establishing provisioned connections” of [5].

5.3.1.8.10 Forcing MSs to perform network entry at once

Refer to “ 6.3.9.14 Forcing MSs to perform network entry at once” of [5].

5.3.1.9 Ranging

Refer to “ 6.3.10 Ranging” of [5].

5.3.1.9.1 UL periodic ranging

Refer to “ 6.3.10.2 UL periodic ranging” of [5].

5.3.1.9.2 OFDMA-based ranging

Refer to “ 6.3.10.3 OFDMA-based ranging” of [5].

5.3.1.9.2.1 Contention-based initial ranging and automatic adjustments

Refer to “ 6.3.10.3.1 Contention-based initial ranging and automatic adjustments” of [5].

5.3.1.9.2.2 Periodic ranging and automatic adjustments

Refer to “ 6.3.10.3.2 Periodic ranging and automatic adjustments” of [5].

5.3.1.10 Quality of service (QoS)

Refer to “ 6.3.14 Quality of service (QoS)” of [5].

5.3.1.10.1 Theory of operation

Refer to “ 6.3.14.1 Theory of operation” of [5].

5.3.1.10.2 Service flows

Refer to “ 6.3.14.2 Service flows” of [5].

5.3.1.10.3 Object model

Refer to “ 6.3.14.3 Object model” of [5].

5.3.1.10.4 Service classes

Refer to “ 6.3.14.4 Service classes” of [5].

5.3.1.10.4.1 Global service classes

Refer to “ 6.3.14.4.1 Global service classes” of [5].

5.3.1.10.5 Types of service flows

Refer to “ 6.3.14.6 Types of service flows” of [5].

5.3.1.10.5.1 Active service flows

Refer to “ 6.3.14.6.3 Active service flows” of [5].

5.3.1.10.6 Service flow creation

5.3.1.10.6.1 Dynamic service flow creation

Refer to “ 6.3.14.7.1.1 Dynamic service flow creation—SS-initiated” of [5].

5.3.1.10.7 Dynamic service flow modification and deletion

Refer to “ 6.3.14.8 Dynamic service flow modification and deletion” of [5].

5.3.1.10.8 Service flow management

5.3.1.10.8.1 Dynamic service flow state transitions

Refer to “ 6.3.14.9.2 Dynamic service flow state transitions” of [5].

5.3.1.10.8.2 Dynamic service addition (DSA)

Refer to “ 6.3.14.9.3 Dynamic service addition (DSA)” of [5].

5.3.1.10.8.3 Connection release

Refer to “ 6.3.14.9.5 Connection release” of [5].

5.3.1.11 DL CINR report operation

Refer to “ 6.3.17 DL CINR report operation” of [5].

5.3.1.11.1 DL CINR report with REP-RSP MAC message

Refer to “ 6.3.17.1 DL CINR report with REP-RSP MAC message” of [5].

5.3.1.12 Data delivery services for mobile network

Refer to “ 6.3.19 Data delivery services for mobile network” of [5].

5.3.1.12.1 Types of data delivery services

Refer to “6.3.19.1 Types of data delivery services” of [5].

5.3.1.12.1.1 Unsolicited grant service (UGS)

Refer to “ 6.3.19.1.1 Unsolicited grant service (UGS)” of [5].

5.3.1.12.1.2 Best effort (BE) service

Refer to “ 6.3.19.1.4 Best effort (BE) service” of [5].

5.3.1.12.1.3 Extended real-time variable-rate (ERT-VR) service

Refer to “ 6.3.19.1.5 Extended real-time variable-rate (ERT-VR) service” of [5].

5.3.1.13 Sleep mode for mobility-supporting MS(Optional)

Refer to “6.3.20.1 Introduction" of [5]

5.3.1.13.1 Power saving classes of type I

Refer to “ 6.3.20.2 Power saving classes of type I” of [5].

5.3.1.13.2 Periodic ranging in sleep mode.

Refer to “ 6.3.20.5 Periodic ranging in sleep mode” of [5].

5.3.1.13.2.1 Periodic ranging in sleep mode for OFDMA PHY.

Refer to “ 6.3.20.5.2 Periodic ranging in sleep mode for OFDMA PHY” of [5].

5.3.1.14 MAC support for HARQ (optional)

Refer to “ 6.3.16 MAC support for HARQ” of [5].

5.3.1.14.1 Subpacket generation

Refer to “ 6.3.16.1 Subpacket generation” of [5].

5.3.1.14.2 DL/UL ACK/NAK signaling

Refer to “ 6.3.16.2 DL/UL ACK/NAK signaling” of [5].

5.3.1.14.3 HARQ parameter signaling

Refer to “ 6.3.16.3 HARQ parameter signaling” of [5].

Chapter 6 Measurement Method

The measurement methods for the Transmitter and Receiver should be in accordance with those described in Table No.1-1-(3) of "Ordinance concerning Technical Regulations Conformity Certification etc. of Specified Radio Equipment" (http://www.tele.soumu.go.jp/resource/e/equ/tech/octr.pdf) or other those methods equivalent or more with these methods. For those measurement items not covered in these should be, however, in accordance with generally practiced methods.

Telecom Engineering Center, has developed some measurement methods "TELEC-T256: Measurement Methods of Mobile Station and Base Station for 200 MHz-Band Broadband Wireless Communications" based on the provision of MIC Notification 88-2 (January 26th, 2004) in accordance with Table 1-1-(3) of "Ordinance concerning Technical Regulations Conformity Certification etc. of Specified Radio Equipment".

<Blank Page>

Chapter 7 Abbreviation

Abbreviation	Full Word
AAS	Adaptive Antenna System
ACK	ACKnowledgement
ARQ	Automatic Repeat-reQuest
BR	Bandwidth Request
CC	Convolutional Coding
CDMA	Code Division Multiple Access
CINR	Carrier-to-Interference and Noise Ratio
CRC	Cyclic Redundancy Check
CSI	Channel State Information
CTC	Convolutional Turbo Coding
DIUC	Downlink Interval Usage Code
DREG	DeREGisitration
DSA	Dynamic Service Addition
DIUC	Downlink Internal Usage Code
EIRP	Effective Isotropic Radiated Power
FFT	Fast Fourier Transform
HARQ	Hybrid Automatic Repeat-reQuest
IAS	Interference Assisted Scheme
IE	Information Element
ITU-R	International Telecommunication Union Radiocommunications sector
MAC	Medium Access Control layer
MIC	Ministry of Internal affair and Communications
MIMO	Multiple Input Multiple Output
MISO	Multiple Input Single Output
MML	MaxiMum Likelihood
MRC	Maximum Ratio Combining
NT	Notifications of the Ministry of Post and Telecommunications during and before 2000 and the Ministry of Internal Affairs and Communications during and after 2001.
OFDMA	Orthogonal Frequency Division Multiple Access
ORE	Ordinance Regulating Radio Equipment

PDU	Protocol Data Unit
PHY	PHYsical Layer
PUSC	Partially Used SubChannelization
QAM	Quadrature Amplitude Modulation
QPSK	Quadrature Phase Shift Keying
RSSI	Received Signal Strength Indication
SBC	Subscriber station Basic Capability
TDD	Time Division Duplex
UCD	UL Channel Descriptor
UGS	Unsolicited Grant Service
UIUC	Uplink Internal Usage Code

Annex 1 Summary of this ARIB Standard

The following two Tables summarize the description of “Chapter 4 PHY” and “Chpater 5 MAC” of this ARIB standard, respectively, on a section-by-section basis. In many sections, Mode 1 with FFT-512 (Mobile WiMAX), Mode 1 with FFT-1024 and Mode 2 (FFT-1024) have common specifications referring to the relevant sections of IEEE802.16-2009. There are some differences of the specifications among Mode 1 FFT-512, Mode 1 FFT-1024 and Mode 2.

AN1-1 CHAPTER 4 PHY Summary

Section	Description		
	Mode1 FFT-512 (Mobile WiMAX)	Mode 1 FFT-1024	Mode 2 FFT-1024
4.1 INTRODUCTION	original description		
4.2 OFDMA symbol description, symbol parameters and transmitted signal	—		
4.2.1 Time domain description	Refer to “ 8.4.2.1 Time domain description” of [5]		
4.2.2 Frequency domain description	Refer to “ 8.4.2.2 Frequency domain description” of [5]		
4.2.3 Primitive parameters	original description		
4.2.4 Derived parameters	Refer to “ 8.4.2.4 Derived parameters” of [5]		
4.2.5 Transmitted signal	Refer to “ 8.4.2.5 Transmitted signal” of [5]		
4.3 OFDMA BASIC TERMS DEFINITION	Refer to “ 8.4.3 OFDMA basic terms definition” and its subsections of [5]		
4.4 FRAME STRUCTURE	Refer to “ 8.4.4 Frame structure” and its subsections of [5]		
4.5 MAP MESSAGE FIELDS AND IEs	—		
4.5.1 DL-MAP PHY Synchronization field	Refer to “ 8.4.5.1 DL-MAP PHY Synchronization field” of [5]		
4.5.2 Frame duration codes	Refer to “ 8.4.5.2 Frame duration codes” of [5]		
4.5.3 DL-MAP IE format	Refer to “ 8.4.5.3 DL-MAP IE format” of [5]		
4.5.3.1 DIUC allocation	Refer to “ 8.4.5.3.1 DIUC allocation” of [5]		
4.5.3.2 HARQ and Sub-MAP Pointer IE	Refer to “ 8.4.5.3.10 HARQ and Sub-MAP Pointer IE” of [5]	(optional)	
4.5.3.3 HARQ DL MAP IE	Refer to “ 8.4.5.3.21	(optional)	

	HARQ DL MAP IE" of [5]	
4.5.3.4 DL HARQ ACK IE	Refer to " 8.4.5.3.22 DL HARQ ACK IE" of [5]	(optional)
4.5.4 UL-MAP IE format	Refer to " 8.4.5.4 UL-MAP IE format" of [5]	
4.5.4.1 UIUC allocation	Refer to " 8.4.5.4.1 UIUC allocation" of [5]	
4.5.4.2 CDMA Allocation UL-MAP IE format	Refer to " 8.4.5.4.3 CDMA Allocation UL-MAP IE format" of [5]	
4.5.4.3 HARQ UL-MAP IE	Refer to " 8.4.5.4.22 HARQ UL-MAP IE" of [5]	(optional)
4.5.4.4 HARQ ACK Region Allocation IE	Refer to " 8.4.5.4.23 HARQ ACK Region Allocation IE" of [5]	(optional)
4.5.5 Burst profile format	Refer to " 8.4.5.5 Burst profile format" of [5]	
4.5.6 Compressed maps	Refer to " 8.4.5.6 Compressed maps" and its subsections of [5]	
4.6 OFDMA SUBCARRIER ALLOCA-TIONS	original description	
4.6.1 Downlink (DL)	Refer to " 8.4.6.1 Downlink (DL)" of [5]	
4.6.1.1 Preamble	Refer to " 8.4.6.1.1 Preamble" and its subsections of [5]	
4.6.1.2 Symbol structure	4.6.1.2.1 Refer to " 8.4.6.1.2.1 Symbol structure for PUSC" of [5]	4.6.1.2.2 original description
4.6.2 Uplink (UL)	original description	
4.6.2.1 Symbol structure for sub-channel	4.6.2.1.1 Refer to " 8.4.6.2.1 Symbol structure for subchannel (PUSC)" of [5]	4.6.2.1.2 original description
4.6.2.2 Partitioning of sub-carriers into subchannels in the UL	4.6.2.2.1 Refer to " 8.4.6.2.2 Partitioning of subcarriers into subchannels in the UL" of [5]	4.6.2.2.2 original description
4.6.2.3 UL permutation example	4.6.2.3.1	4.6.2.3.2

	Refer to “ 8.4.6.2.3 UL permutation example” of [5]	original description
4.6.2.4 Data subchannel rotation scheme	Refer to “ 8.4.6.2.6 Data subchannel rotation scheme” of [5]	
4.7 OFDMA RANGING	Refer to “ 8.4.7 OFDMA ranging” and its subsections of [5]	
4.8 Space-time coding (STC) (optional in Mode 1)	Refer to “ 8.4.8 Space-time coding (STC) (optional)” of [5]	
4.8.1 STC using two antennas	Refer to “8.4.8.1 STC using two antennas” of [5]	
4.9 Transmit Diversity Schemes (optional in Mode 2)		4.9 original description
4.10 CHANNEL CODING	Refer to “ 8.4.9 Channel coding” of [5]	
4.10.1 Randomization	Refer to “ 8.4.9.1 Randomization” of [5]	
4.10.2 Encoding	Refer to “ 8.4.9.2 Encoding” of [5]	
4.10.2.1 Convolutional coding (CC)	Refer to “ 8.4.9.2.1 Convolutional coding (CC) ” of [5]	
4.10.2.2 Convolutional turbo codes (CTCs)	Refer to “ 8.4.9.2.3 Convolutional turbo codes (CTCs) (optional)” of [5]	(optional)
4.10.3 Interleaving	4.10.3.1 Refer to “ 8.4.9.3 Interleaving” of [5]	4.10.3.2 original description
4.10.4 Modulation	Refer to “ 8.4.9.4 Modulation” and its subsections of [5]	
4.10.5 Repetition	Refer to “ 8.4.9.5 Repetition” of [5]	
4.10.6 Zone boosting	Refer to “ 8.4.9.6 Zone boosting” of [5]	
4.11 CONTROL MECHANISMS	—	
4.11.1 Synchronization	Refer to “ 8.4.10.1 Synchronization” of [5]	
4.11.1.1 Network synchronization	Refer to “ 8.4.10.1.1 Network synchronization” of [5]	(optional)
4.11.1.2 SS synchronization	Refer to “ 8.4.10.1.2 SS synchronization” of [5]	

4.11.2 Ranging	Refer to “ 8.4.10.2 Ranging” of [5]	
4.11.3 Power control	Refer to “ 8.4.10.3 Power control” and its subsections of [5]	
4.12 FAST-FEEDBACK CHANNELS	Refer to “ 8.4.11 Fast-feedback channels” and its subsections of [5]	
4.13 CHANNEL QUALITY MEASUREMENTS	Refer to “ 8.4.12 Channel quality measurements“ and its subsections of [5]	
4.14 TRANSMITTER REQUIREMENTS	Refer to “8.4.13 Transmitter requirements “ and its subsections of [5]	
4.15 RECEIVER REQUIREMENTS	Refer to “8.4.14 Receiver requirements“ and its subsections of [5]	
4.16 PHY PARAMETERS AND CONSTANTS	4.16.1 original description	4.16.2 original description

AN1-2 CHAPTER 5 MAC Summary

Section	Description		
	Mode1 FFT-512 (Mobile WiMAX)	Mode 1 FFT-1024	Mode 2 FFT-1024
5.1 INTRODUCTION	original description		
5.2 SERVICE-SPECIFIC CS	Refer to “5. Service-specific CS“ and its subsections of [5]		
5.3 MAC COMMON PART SUBLAYER	—		
5.3.1 Data/Control plane	—		
5.3.1.1 Addressing and connections	—		
5.3.1.1.1 Point-to-multipoint (PMP) operation overview	Refer to “6.1 Point-to-multipoint (PMP) operation overview” of [5]		
5.3.1.2 MAC PDU formats	Refer to “ 6.3.2 MAC PDU formats” of [5]		
5.3.1.2.1 MAC header formats	Refer to “6.3.2.1 MAC header formats “ and its subsections of [5]		
5.3.1.2.2 MAC subheaders and special payloads	Refer to “6.3.2.2 MAC subheaders and special payloads “ and its subsections of [5]		

5.3.1.2.3 MAC management messages	Refer to “ 6.3.2.3 MAC management messages” of [5]
5.3.1.2.3.1 DCD (DL channel descriptor) message	Refer to “ 6.3.2.3.1 DCD (DL channel descriptor) message” of [5]
5.3.1.2.3.2 DL-MAP (Downlink map) message	Refer to “ 6.3.2.3.2 DL-MAP (Downlink map) message” of [5]
5.3.1.2.3.3 UCD (UL channel descriptor) message	Refer to “ 6.3.2.3.3 UCD (UL channel descriptor) message” of [5]
5.3.1.2.3.4 UL-MAP (UL map) message	Refer to “ 6.3.2.3.4 UL-MAP (UL map) message” of [5]
5.3.1.2.3.5 RNG-REQ (ranging request) message	Refer to “ 6.3.2.3.5 RNG-REQ (ranging request) message” of [5]
5.3.1.2.3.6 RNG-RSP (ranging response) message	Refer to “ 6.3.2.3.6 RNG-RSP (ranging response) message” of [5]
5.3.1.2.3.7 REG-REQ (registration request) message	Refer to “ 6.3.2.3.7 REG-REQ (registration request) message” of [5]
5.3.1.2.3.8 REG-RSP (registration response) message	Refer to “ 6.3.2.3.8 REG-RSP (registration response) message” of [5]
5.3.1.2.3.9 DSA-REQ message	Refer to “ 6.3.2.3.10 DSA-REQ message” of [5]
5.3.1.2.3.10 DSA-RSP message	Refer to “ 6.3.2.3.11 DSA-RSP message” of [5]
5.3.1.2.3.11 DSA-ACK message	Refer to “ 6.3.2.3.9.12 DSA-ACK message” of [5]
5.3.1.2.3.12 SBC-REQ (SS basic capability request) message	Refer to “ 6.3.2.3.23 SBC-REQ (SS basic capability request) message” of [5]
5.3.1.2.3.13 SBC-RSP (SS basic capability response) message	Refer to “ 6.3.2.3.24 SBC-RSP (SS basic capability response) message” of [5]

5.3.1.2.3.14 DREG-CMD (de/reregister command) message	Refer to " 6.3.2.3.26 DREG-CMD (de/reregister command) message" of [5]	
5.3.1.2.3.15 ARQ-Feedback message	Refer to " 6.3.2.3.30 ARQ-Feedback message" of [5]	
5.3.1.2.3.16 ARQ-Discard message	Refer to " 6.3.2.3.31 ARQ-Discard message" of [5]	
5.3.1.2.3.17 ARQ-Reset message	Refer to " 6.3.2.3.32 ARQ-Reset message" of [5]	
5.3.1.2.3.18 Channel Measurement REP-REQ/RSP (report request/response)	Refer to " 6.3.2.3.33 Channel Measurement REP-REQ/RSP (report request/response)" of [5]	
5.3.1.2.3.19 DREG-REQ (SS deregistration request) message	Refer to " 6.3.2.3.37 DREG-REQ(SS deregistration request) messge" of [5]	
5.3.1.2.3.20 HARQ MAP message	Refer to " 6.3.2.3.38 HARQ MAP message" of [5]	(optional)
5.3.1.3 Construction and transmission of MAC PDUs	Refer to "6.3.3 Construction and transmission of MAC PDUs " and its subsections of [5]	
5.3.1.4 ARQ mechanism	Refer to "6.3.4 ARQ mechanism " and its subsections of [5]	
5.3.1.5 Scheduling services	Refer to "6.3.5 Scheduling services " and its subsections of [5]	
5.3.1.6 Bandwidth allocation and request mechanisms	Refer to "6.3.6 Bandwidth allocation and request mechanisms" and its subsections of [5]	
5.3.1.7 MAC support of PHY	Refer to "6.3.7 MAC support of PHY" and its subsections of [5]	
5.3.1.8 Network entry and initialization	Refer to "6.3.9 Network entry and initialization" and its subsections of [5]	
5.3.1.9 Ranging	Refer to "6.3.10 Ranging " and its subsections of [5]	
5.3.1.10 Quality of service (QoS)	Refer to "6.3.14 Quality of service (QoS) " and its subsections of [5]	
5.3.1.11 DL CINR report operation	Refer to "6.3.17 DL CINR report operation " and its	

	subsections of [5]	
5.3.1.12 Data delivery services for mobile network	Refer to “6.3.19 Data delivery services for mobile network“ and its subsections of [5]	
5.3.1.13 Sleep mode for mobility-supporting MS	Refer to “6.3.20 Sleep mode for mobility-supporting MS“ and its subsections of [5]	(optional)
5.3.1.14 MAC support for HARQ	Refer to “6.3.16 MAC support for HARQ “ and its subsections of [5]	(optional)

Annex 2 Relevant IEEE Standard

IEEE Standard for
Local and metropolitan area networks
Part16: Air interface for Broadband
Wireless Access systems

IEEE Std 802.16™ -2009

<Blank Page>

802.16™

IEEE Standard for
Local and metropolitan area networks

Part 16: Air Interface for Broadband Wireless Access Systems

IEEE Computer Society
and the
IEEE Microwave Theory and Techniques Society

Sponsored by the
LAN/MAN Standards Committee

IEEE
3 Park Avenue
New York, NY 10016-5997, USA

29 May 2009

IEEE Std 802.16™-2009
(Revision of
IEEE Std 802.16-2004)

IEEE Std 802.16™-2009
(Revision of
IEEE Std 802.16-2004)

IEEE Standard for
Local and metropolitan area networks

Part 16: Air Interface for Broadband Wireless Access Systems

Sponsor
LAN/MAN Standards Committee
of the
IEEE Computer Society
and the
IEEE Microwave Theory and Techniques Society

Approved 13 May 2009
IEEE-SA Standards Board

Grateful acknowledgment is made to Cable Television Laboratories for the permission to use the following source material:

Radio Frequency Interface Specification (version 1.1), part of Data-Over-Cable Service Interface Specifications, © Copyright 1999, Cable Television Laboratories.

Baseline Privacy Plus Interface Specification, © Copyright 1999, Cable Television Laboratories.

Abstract: This standard specifies the air interface, including the medium access control layer (MAC) and physical layer (PHY), of combined fixed and mobile point-to-multipoint broadband wireless access (BWA) systems providing multiple services. The MAC is structured to support multiple physical layer (PHY) specifications, each suited to a particular operational environment. The standard enables rapid worldwide deployment of innovative, cost effective, and interoperable multivendor broadband wireless access products, facilitates competition in broadband access by providing alternatives to wireline broadband access, encourages consistent worldwide spectrum allocations, and accelerates the commercialization of broadband wireless access systems. The standard is a revision of IEEEE Std 802.16-2004, and consolidates material from IEEE Std 802.16e™-2005, IEEE 802.16-2004/Cor1-2005, IEEE 802.16f™-2005, and IEEE Std 802.16g™-2007, along with additional maintenance items and enhancements to the management information base specifications. This revision supersedes and makes obsolete IEEE Std 802.16-2004 and all of its subsequent amendments and corrigenda.
Keywords: broadband wireless access (BWA), cellular layer, fixed broadband wireless access, MAN, management information base (MIB), microwave, mobile broadband wireless access, OFDM, OFDMA, radio, standard, wireless access systems (WAS), WirelessMAN®, wireless metropolitan area network

---

The Institute of Electrical and Electronics Engineers, Inc.
3 Park Avenue, New York, NY 10016-5997, USA

PDF: ISBN 978-0-7381-5919-5 STD95914

Introduction

This introduction is not part of IEEE Std 802.16-2009, IEEE Standard for Local and metropolitan area networks—Part 16: Air Interface for Broadband Wireless Access Systems.

This standard specifies the air interface of combined fixed broadband wireless access (BWA) systems supporting multimedia services. The medium access control layer (MAC) supports a primarily point-to-multipoint architecture. The MAC is structured to support multiple physical layer (PHY) specifications, each suited to a particular operational environment. For operational frequencies from 10–66 GHz, the WirelessMAN-SC PHY, based on single-carrier modulation, is specified. For frequencies below 11 GHz, where propagation without a direct line of sight must be accommodated, two alternatives are provided: WirelessMAN-OFDM (using orthogonal frequency-division multiplexing) and WirelessMAN-OFDMA (using orthogonal frequency-division multiple access). This standard is a revision of IEEE Std 802.16-2004 and consolidates material from IEEE 802.16e-2005, IEEE 802.16-2004/Cor1-2005, IEEE 802.16f-2005, and IEEE 802.16g-2007, along with additional maintenance items and enhancements to the management information base specifications. This revision supersedes and makes obsolete IEEE Std 802.16-2004 as well as IEEE 802.16e-2005, IEEE 802.16-2004/Cor1-2005, IEEE 802.16f-2005, and IEEE 802.16g-2007.

Conformance test methodology

The multipart conformance test documents for IEEE Std 802.16 are designated by "IEEE Standard 802.16/ConformanceXX."

Notice to users

Laws and regulations

Users of these documents should consult all applicable laws and regulations. Compliance with the provisions of this standard does not imply compliance to any applicable regulatory requirements. Implementers of the standard are responsible for observing or referring to the applicable regulatory requirements. IEEE does not, by the publication of its standards, intend to urge action that is not in compliance with applicable laws, and these documents may not be construed as doing so.

Copyrights

This document is copyrighted by the IEEE. It is made available for a wide variety of both public and private uses. These include both use, by reference, in laws and regulations, and use in private self-regulation, standardization, and the promotion of engineering practices and methods. By making this document available for use and adoption by public authorities and private users, the IEEE does not waive any rights in copyright to this document.

Updating of IEEE documents

Users of IEEE standards should be aware that these documents may be superseded at any time by the issuance of new editions or may be amended from time to time through the issuance of amendments, corrigenda, or errata. An official IEEE document at any point in time consists of the current edition of the document together with any amendments, corrigenda, or errata then in effect. In order to determine whether a given document is the current edition and whether it has been amended through the issuance of amendments, corrigenda, or errata, visit the IEEE Standards Association website at http://ieeexplore.ieee.org/xpl/standards.jsp, or contact the IEEE at the address listed previously.

For more information about the IEEE Standards Association or the IEEE standards development process, visit the IEEE-SA website at http://standards.ieee.org.

Errata

Errata, if any, for this and all other standards can be accessed at the following URL: http://standards.ieee.org/reading/ieee/updates/errata/index.html. Users are encouraged to check this URL for errata periodically.

Interpretations

Current interpretations can be accessed at the following URL: http://standards.ieee.org/reading/ieee/interp/index.html.

Patents

Attention is called to the possibility that implementation of this standard may require use of subject matter covered by patent rights. By publication of this standard no position is taken with respect to the existence or validity of any patent rights in connection therewith. The IEEE is not responsible for identifying Essential Patent Claims for which a license may be required, for conducting inquiries into the legal validity or scope of Patents Claims or determining whether any licensing terms or conditions provided in connection with submission of a Letter of Assurance, if any, or in any licensing agreements are reasonable or non-discriminatory. Users of this (guide, trial-use, standard, or recommended practice) are expressly advised that determination of the validity of any patent rights, and the risk of infringement of such rights, is entirely their own responsibility. Further information may be obtained from the IEEE Standards Association.

Participants

This document was developed by the IEEE 802.16 Working Group on Broadband Wireless Access, which develops the WirelessMAN® Standard for Wireless Metropolitan Area Networks.

IEEE 802.16 Working Group Officers
Roger B. Marks, *Chair*
Jose Puthenkulam, *Vice Chair*
Peiying Zhu, *Secretary*
Jonathan Labs, *Maintenance Task Group Chair*
Joseph Schumacher, *Chief Technical Editor*
Joey Chou, *Assistant Editor*
Itzik Kitroser, *Assistant Editor*
Ron Murias, *Assistant Editor*
Scott Probasco, *Assistant Editor*

The following members of the IEEE 802.16 Working Group on Broadband Wireless Access participated in the Working Group Letter Ballot in which the draft of this standard was prepared and finalized for IEEE Ballot:

Ray Abrishami
Sassan Ahmadi
JunBae Ahn
Dov Andelman
Reza Arefi
Phillip Barber
Kevin Baum
Adrian Boariu
Eckard Bogenfeld
Achim Brandt
Dale Branlund
Terri Brooks
Sean Cai
James Carlo
Jaesun Cha
Suchang Chae
Jae Hwan Chang
Sungcheol Chang
Naftali Chayat
Rémi Chayer
Wei-Peng Chen
Paul Cheng
Aik Chindapol
Hua (Mary) Chion
Jaehee Cho
Jaeweon Cho
Kihyoung Cho
Myeon-Gyun Cho
Hokyu Choi
Hyoung-Jin Choi
Hyung-Nam Choi
In-Kyeong Choi
Jinsoo Choi
Joonyoung Choi
Yang-Seok Choi
Chie Ming Chou
Joey Chou
Jerry Chow
Jimmy Chui
Takafumi Chujo
Jin Young Chun
Erik Colban
David Comstock
José Costa
Steven Crowley
Mark Cudak
Pranav Dayal
Carlos De Segovia
Upkar Dhaliwal
Yoshiharu Doi
Roya Doostnejad
Lester Eastwood
Carl Eklund
Per Elmdahl
Michael Erlihson
Kamran Etemad
Yu-Chang Eun
Torsten Fahldieck
Peretz Feder
Shulan Feng
Mo-Han Fong
Avraham Freedman
I-Kang Fu
Dan Gal
Pieter-Paul Giesberts
Rob Glassford
Mariana Goldhamer
David Grandblaise
Ismail Guvenc
Zion Hadad
GeneBeck Hahn
Shkumbin Hamiti
Jung Ho Han
Mike Hart
Keisuke Higuchi
Minnie Ho
Chang-Lung Hsiao
Ching-Tarng Hsieh
Yu-Tao Hsieh
Hsien-Tsung Hsu
Yuan-Ying Hsu
Teck Hu
Cancan Huang
Junhong Hui
John Humbert
Yerang Hur
In Seok Hwang
Bin-Chul Ihm
Jaehyuk Jang
Hyung Joon Jeon
Moo Ryong Jeong
Sunggeun Jin
Brian Johnson
Kerstin Johnsson
David Johnston
Panyuh Joo
Takeo Kanai
Hyunjeong Kang
Seung Hyun Kang
Ted Kaplan
Ofer Kelman
Brian G. Kiernan
Bong Ho Kim
Changkyoon Kim
Ronny (Yong-Ho) Kim
Sang Youb Kim
Sungkyung Kim
Young Kyun Kim
Young-Il Kim
Young-jae Kim
Youngho Kim
Takaaki Kishigami
Itzik Kitroser
Jeniston Deviraj Klutto Milleth
Ali Koc
Changhoi Koo
Thanasis Korakis

Gokhan Korkmaz
Toshiyuki Kuze
Byung-Jae Kwak
Jin Sam Kwak
Dong Seung Kwon
Yeong-Hyeon Kwon
Jonathan Labs
Pierre Lamoureux
Hyun Lee
Hyunjeong Lee
Jin Lee
Ki-Dong Lee
Kyu Ha Lee
Mi Hyun Lee
Sang-Ho Lee
Seung Joon Lee
Sukwoo Lee
Wookbong Lee
Youn-Tai Lee
Yung-Ting Lee
Matty Levanda
Guangjie Li
Jiang Li
Jun Li
Richard Li
Shaohua Li
Aeri Lim
Geunhwi Lim
Hyoung-Kyu Lim
Kwangjae Lim
Tzu-Ming Lin
Zhibin Lin
Stefan Lindgren
Hang Liu
Michael Livschitz
Titus Lo
Kanchei Loa
Jianmin Lu
Yanling Lu
Michael Lynch
Mohammad Madihian
David Maez
Giovanni Maggi
Shashikant Maheshwari
Ronald Mao
Roger B. Marks
Djamal-Eddine Meddour
Scott Migaldi
Shantidev Mohanty
Andreas Molisch
Ollivier Mont-Reynaud
Sungho Moon
Ron Murias
Yukimasa Nagai
Ayman Naguib
Kenichi Nakamura
Michiharu Nakamura
Minseok Noh
Mitsuo Nohara
John Norin
Changyoon Oh
Min-Seok Oh
Masato Okuda
Kim Olszewski
Philip Orlik
Apostolos Papathanassiou
David Paranchych
DS Park
Jeongho Park
Vijay Patel
Paul Piggin
Robert Popoli
Darcy Poulin
Scott Probasco
Jose Puthenkulam
Xin Qi
Nanjian (Jeff) Qian
Fei Qin
Hongyun Qu
Arvind Raghavan
Shyamal Ramachandran
Ranga K Reddy
Fang-Ching Ren
Maximilian Riegel
Kwanhee Roh
Wonil Roh
Zhigang Rong
Adel Rouz
Philip Rubin
Herbert Ruck
Charles Rush
Kiseon Ryu
Aryan Saed
Yousuf Saifullah
Kenji Saito
Sumeet Sandhu
Ioannis Sarris
Joerg Schaepperle
Gary Schlanger
Joseph Schumacher
Gamini Senarath
Zheng Shang
Ariel Sharon
Wern-Ho Sheen
Peretz Shekalim
Gang Shen
Matthew Sherman
Jaejeong (Brian) Shim
D. J. Shyy
James Simkins
Kathiravetpillai Sivanesan
Sten Sjoberg
Jung Je Son
Yeongmoon Son
Ting-Chen (Tom) Song
Young Seog Song
Roshni Srinivasan
Kenneth Stanwood
David Steer
Aram Sukiasyan
Sheng Sun
Yong Sun
Jaroslaw J Sydir
John Sydor
Mineo Takai
Yukihiro Takatani
Jeffrey Tao
Rakesh Taori
Shawn Taylor
Wen Tong
Arnaud Tonnerre
Shiau-He Tsai
Rainer T. Ullmann
David Urban
Sunil Vadgama
Richard van Leeuwen
Dorin Viorel
Eugene Visotsky
Frederick Vook
Arthur Wang
Guo Qiang Wang
Lei Wang
Michael Wang
Shu-Shaw Wang
Stanley Wang
Yanhong Wang
Fujio Watanabe
Alfred Wieczorek
Geng Wu
Xuyong Wu
Yingzhe Wu
David Xiang
Chengjie Xie
Hua Xu
Ling Xu
Akiyoshi Yagi
Rongzhen Yang
Xiangying Yang
Yunsong Yang
Vladimir Yanover
Hua-Chiang Yin
Chulsik Yoon
Aeran Youn
Jungnam Yun
Sangboh Yun
Masaaki Yuza
Jinyun Zhang
Kaibin Zhang
Hongming Zheng
Fei Frank Zhou
Hua Zhou
Yuefeng Zhou
Chenxi Zhu
Peiying Zhu

The following members of the individual balloting committee voted on this standard. Balloters may have voted for approval, disapproval, or abstention.

Thomas Alexander
Dov Andelman
Butch Anton
Danilo Antonelli
Reza Arefi
Baligh Mohammad
Phillip Barber
Harry Bims
Yair Bourlas
Nancy S. Bravin
William Byrd
Sean Cai
Jing Cao
James Carlo
Juan Carreon
Jay Catelli
Youngbin Chang
Yung-Mu Chen
Aik Chindapol
Jaeweon Cho
Hokyu Choi
Joey Chou
Keith Chow
Jinyong Chung
Erik Colban
Charles Cook
Todor Cooklev
José Costa
Petar Djukic
Mi-Sun Do
Carlo Donati
Sourav Dutta
Lester Eastwood
Mo-Han Fong
Andre Fournier
Prince Francis
Avraham Freedman
Jong-kae Fwu
Pieter-Paul Giesberts
Wee Goh
Mariana Goldhamer
Sergiu Goma
Randall Groves
C. Guy
John Hawkins
Robert F. Heile
SeockDeock Hong
John Humbert
Chan-Soo Hwang
Tae-In Hyon
Atsushi Ito
Raj Jain
St.Clair James
Jaehyuk Jang
Junghoon Jee
Hongkyu Jeong
Choi Joonil
Woochul Jung
Tal Kaitz
Shinkyo Kaku
Chol Kang
Hyunjeong Kang
Stuart J. Kerry
Brian G. Kiernan
Eunkyung Kim
Jaehwa Kim
Sang Youb Kim
Yongbum Kim
Youngdoo Kim
Young-Il Kim
Youngsoo Kim
Itzik Kitroser
Edwin Kwon
Jonathan Labs
Pierre Lamoureux
Jeremy Landt
Chul-ki Lee
Jae Min Lee
Jeong Ho Lee
Kyuman Lee
Sungjin Lee
Tae Hoon Lee
Li Li
Jan-Ray Liao
Arthur Light
Hyoung-Kyu Lim
Xiaoyu Liu
Jianmin Lu
G. Luri
Michael Lynch
Syam Madanapalli
Faramarz Maghsoodlou
Roger B. Marks
Jon Martens
Peter Martini
Sean Mcbeath
Edward Mccall
Michael Mcinnis
Steven Methley
Gary Michel
Wade Midkiff
Apurva Mody
Michael Montemurro
Jose Morales
Ronald G. Murias
Michael S.Newman
Charles Ngethe
Nick S. A.Nikjoo
Richard Noens
John Notor
Robert Novak
Satoshi Obara
Chandra Olson
Chris Osterloh
Satoshi Oyama
Soohong Park
Eldad Perahia
James Petranovich
Paul Piggin
Riku Pirhonen
Michael Probasco
Jose Puthenkulam
Arvind Raghavan
Jayaram Ramasastry
Maximilian Riegel
Robert Robinson
Wonil Roh
Zhigang Rong
Jaeyoung Ryu
Osman Sakr
Behcet Sarikaya
Bartien Sayogo
Joseph Schumacher
Ernest Seagraves
Kathiravetpillai Sivanesan
Sten Sjoberg
Jung Je Son
Yeongmoon Son
Kapil Sood
Amjad Soomro
Anthony Soong
Kenneth Stanwood
Thomas Starai
Walter Struppler
Mark Sturza
Alourdes Sully
Zhifeng Tao
Shawn Taylor
Lai King Anna Tee
Wen Tong
Rainer T. Ullmann
Richard Van Leeuwen
Dmitri Varsanofiev
Prabodh Varshney
Sophie Vrzic
Nico Waes
Lei Wang
Michael Wang
Stanley Wang
Michael Williams
Andreas Wolf
Jong eun Won
Geng Wu
Hassan Yaghoobi
Yunsong Yang
Vladimir Yanover
Derek Yu
Hang Zhang
Peiying Zhu
Wenhao Zhu

When the IEEE-SA Standards Board approved this standard on 13 May 2009, it had the following membership:

Robert M. Grow, *Chair*

Steve M. Mills, *Past Chair*

Thomas Prevost, *Vice Chair*

Judith Gorman, *Secretary*

John Barr
Karen Bartleson
Victor Berman
Ted Burse
Richard DeBlasio
Andy Drozd
Mark Epstein
Alexander Gelman
Jim Hughes
Rich Hulett
Young Kyun Kim
Joseph L. Koepfinger*
John Kulick
David Law
Ted Olsen
Glenn Parsons
Ron Petersen
Thomas Prevost
Narayanan Ramachandran
Jon Rosdahl
Sam Sciacca

*Member Emeritus

Also included are the following nonvoting IEEE-SA Standards Board liaisons:

Satish K. Aggarwal, *NRC Representative*
Michael Janezic, *NIST Representative*
Howard Wolfman, *TAB Representative*

Michelle D. Turner
IEEE Standards Program Manager, Document Development

Michael D. Kipness
IEEE Standards Program Manager, Technical Program Development

Historical information regarding IEEE Std 802.16

The following individuals participated in the IEEE 802.16 working group during various stages of the standard's development. Since the initial publication, many IEEE standards have added functionality or provided updates to material included in this standard. Included is a historical list of participants who have dedicated their valuable time, energy, and knowledge to the creation of this standard.

IEEE 802.16 Standards	Date approved by IEEE	Officers at the time of Working Group Letter Ballot
IEEE Std 802.16-2001	6 December 2001	**Roger B. Marks**: *Working Group Chair, Task Group Chair, Technical Editor* **Brian G. Kiernan**: *Working Group Vice Chair* **Carl J. Bushue**: *Working Group Secretary* **Carl Eklund**: *MAC Chair* **Jay Klein**: *PHY Chair* **Carl Eklund, Kenneth Stanwood, Stanley Wang**: *MAC Editors* **Jay Klein, Lars Lindh**: *PHY Editors*
IEEE Std 802.16c-2002 (amendment)	12 December 2002	**Roger B. Marks**: *Working Group Chair* **Paul F. Struhsaker**: *Working Group Vice Chair* **Dean Chang**: *Working Group Secretary* **Kenneth Stanwood**: *Task Group Chair* **Carl Eklund**: *Technical Editor*
IEEE Std 802.16a-2003 (amendment)	29 January 2003	**Roger B. Marks**: *Working Group Chair* **Carl Eklund**: *Vice Chair* **Dean Chang**: *Working Group and Task Group Secretary* **Brian G. Kiernan**: *Task Group Chair* **Nico van Waes**: *Technical Editor* **Brian Eidson**: *Lead SCa PHY Editor*
IEEE Std 802.16-2004	24 June 2004	**Roger B. Marks,** *Working Group Chair* **Kenneth Stanwood,** *Vice Chair* **Dean Chang,** *Working Group Secretary* **Gordon Antonello,** *Task Group d Chair* **Itzik Kitroser,** *Chief Technical Editor* **Robert Nelson,** *Assistant Editor* **Brian Eidson,** *SCa PHY Editorial Contributor* **Nico van Waes,** *Former Chief Technical Editor*
IEEE Std 802.16f-2005 (amendment)	22 September 2005	**Roger B. Marks,** *Working Group Chair* **Kenneth Stanwood,** *Vice Chair* **Dean Chang,** *Working Group Secretary* **Phillip Barber,** *Task Group Chair* **Changhoi Koo,** *Task Group Vice Chair* **Itzik Kitroser,** *Task Group Vice Chair* **Joey Chou,** *IEEE 802.16f Chief Technical Editor*
IEEE Std 802.16e-2005 and IEEE Std 802.16-2004/Cor1-2005 (amendment and corrigendum)	7 December 2005 (amendment) and 8 November 2005 (corrigendum)	**Roger B. Marks,** *Working Group Chair* **Kenneth Stanwood,** *Vice Chair* **Dean Chang,** *Working Group Secretary* **Brian Kiernan,** *Task Group e Chair* **Ron Murias,** *Chief Technical Editor* **Itzik Kitroser,** *Assistant Editor* **Jose Puthenkulam,** *Assistant Editor* **Jonathan Labs,** *Maintenance Task Group Chair* **Itzik Kitroser,** *Chief Technical Editor* **Ken Stanwood,** *Former Maintenance Task Group Chair*

IEEE 802.16 Standards	Date approved by IEEE	Officers at the time of Working Group Letter Ballot
IEEE Std 802.16g-2007	December 2007	**Roger B. Marks**, *Working Group Chair* **Jose Puthenkulam**, *Vice Chair, Co-Editor* **Peiying Zhu**, *Secretary* **Phillip Barber**, *Task Group Chair* **Achim Brandt**, *Chief Technical Editor*
IEEE Std 802.16-2009	May 2009	**Roger B. Marks**, *Working Group Chair* **Peiying Zhu**, *Secretary* **Jonathan Labs,** *Maintenance Task Group Chair* **Joseph Schumacher,** *Chief Technical Editor* **Joey Chou,** *Assitant Editor* **Itzik Kitroser,** *Assitant Editor* **Ron Murias,** *Assitant Editor* **Scott Probasco,** *Assitant Editor*

The following members of the IEEE 802.16 Working Group on Broadband Wireless Access participated in the Working Group Letter Ballot in which the draft of IEEE Std 802.16-2001 was approved:

Song An
Jori Arrakoski
Arun Arunachalam
Eli Avivi
C. R. Baugh
Carlos Belfiore
Anader Benyamin-Seeyar
Carl Bushue
Baruch Buskila
Dean Chang
Naftali Chayat
Rémi Chayer
Mary Condie
José Costa
Bruce Currivan
Amos Dotan
Keith Doucet
Roger Durand
Brian Eidson
Carl Eklund
David Falconer
George Fishel
Adrian Florea
Jeff Foerster
Robert Foster
Avi Freedman
G. Jack Garrison
Conrad Grell
Phil Guillemette
Zion Hadad
Baruch Halachmi
Michael Hamilton
Baya Hatim
Srinath Hosur
Coleman Hum
Wayne Hunter
Eric Jacobsen
Hamadi Jamali
Jacob Jorgensen
Mika Kasslin
Brian Kiernan
John Kim
Itzik Kitroser
Allan Klein
Jay Klein
Demosthenes Kostas
Yigal Leiba
Barry Lewis
Sergio Licardie
John Liebetreu
Lars Lindh
Willie Lu
Fred Lucas
J. Scott Marin
Roger B. Marks
Andy McGregor
Ronald Meyer
Andrew Middleton
Apurva Mody
Jim Mollenauer
William Myers
Lou Olsen
Yunsang Park
Brian Petry
Wayne Pleasant
Moshe Ran
Stanley Reible
Valentine Rhodes
David Ribner
Gene Robinson
Walt Roehr
Durga Satapathy
Glen Sater
Vito Scaringi
Randall Schwartz
Menashe Shahar
Chet Shirali
George Stamatelos
Karl Stambaugh
Ken Stanwood
Michael Stewart
Paul Thompson
Nico van Waes
Subir Varma
Chao-Chun Wang
Bob Ward
Philip Whitehead
David G. Williams
Vladimir Yanover
Huanchun Ye
Chaoming Zeng
Juan Carlos Zúñiga

The following members of the IEEE 802.16 Working Group on Broadband Wireless Access participated in the Working Group Letter Ballot in which the draft of IEEE Std 802.16c-2002 was prepared and finalized for IEEE Ballot:

Aditya Agrawal
Song An
Gordon Antonello
Reza Arefi
S. Lek Ariyavisitakul
Jori Arrakoski
Malik Audeh
Eli Avivi
Yvon Belec
Anader Benyamin-Seeyar
Carl Bushue
Baruch Buskila
Yuankai Chang
Dean Chang
David Chauncey
Naftali Chayat
Rémi Chayer
Brian Edmonston
Brian Eidson
Henry Eilts
Carl Eklund
Avraham Freedman
Andrew Garrett
G. Jack Garrison
Marianna Goldhammer
Zion Hadad
Yoav Hebron
Wayne Hunter
David Husson
Hamadi Jamali
Jacob Jorgensen
Tal Kaitz
Mika Kasslin
Phil Kelly
Ofer Kelman
Brian Kiernan
Itzik Kitroser
Thomas Kolze
Jerome Krinock
Jonathan Labs
John Langley
Yigal Leiba
Moshe Levinson
Xiaodong (Alex) Li
John Liebetreu
Heinz Lycklama
Roger B. Marks
Russell McKown
Ronald Meyer
Andrew Middleton
Apurva Mody
Ronald Murias
Robert Nelson
Kim Olszewski
Manish Patel
Kenneth Peirce
Subbu Ponnuswamy
Moshe Ran
Gene Robinson
Shane Rogers
Amir Sarajedini
Octavian Sarca
Durga Satapathy
Yossi Segal
Radu Selea
James Simkins
Manoneet Singh
Sean Sonander
Kenneth Stanwood
Michael Stewart
Paul F. Struhsaker
Jose Tellado
Nico van Waes
Subir Varma
Arthur Wang
Lei Wang
Stanley Wang
Philip Whitehead
Curt Wise
Vladimir Yanover
Heejung Yu

The following members of the IEEE 802.16 Working Group on Broadband Wireless Access participated in the Working Group Letter Ballot in which the draft of IEEE Std 802.16a-2003 was prepared and finalized for IEEE Ballot:

Aditya Agrawal
Song An
Gordon Antonello
Reza Arefi
S. Lek Ariyavisitakul
Jori Arrakoski
Malik Audeh
Eli Avivi
Yvon Belec
Anader Benyamin-Seeyar
Carl Bushue
Baruch Buskila
Dean Chang
Yuankai Chang
David Chauncey
Naftali Chayat
Rémi Chayer
Brian Edmonston
Brian Eidson
Henry Eilts
Carl Eklund
Avraham Freedman
Andrew Garrett
G. Jack Garrison
Brian Gieschen
Marianna Goldhammer
Zion Hadad
Yoav Hebron
Wayne Hunter
David Husson
Hamadi Jamali
Jacob Jorgensen
Tal Kaitz
Mika Kasslin
Phil Kelly
Ofer Kelman
Brian Kiernan
Itzik Kitroser
Thomas Kolze
Jerome Krinock
Rajeev Krishnamoorthy
Jonathan Labs
John Langley
Yigal Leiba
Moshe Levinson
Lingjie Li
Xiaodong (Alex) Li
John Liebetreu
Lars Lindh
Hui-Ling Lou
Heinz Lycklama
Roger B. Marks
Russell McKown
Ronald Meyer
Andrew Middleton
Apurva Mody
Ronald Murias
Robert Nelson
Kim Olszewski
Mike Paff
Manish Patel
Kenneth Peirce
Subbu Ponnuswamy
Stanley Reible
Gene Robinson
Shane Rogers
Amir Sarajedini
Octavian Sarca
Durga Satapathy
Carl Scarpa
Randall Schwartz
Yossi Segal
Radu Selea
Olivier Seller
James Simkins
Manoneet Singh
Sean Sonander
Kenneth Stanwood
Michael Stewart
Paul F. Struhsaker
John Sydor
Shawn Taylor
David Trinkwon
Nico van Waes
Subir Varma
Arthur Wang
Lei Wang
Stanley Wang
Philip Whitehead
Curt Wise
Vladimir Yanover
Huanchun Ye
Heejung Yu
Wenhan Zhang

The following members of the IEEE 802.16 Working Group on Broadband Wireless Access participated in the Working Group Letter Ballot in which the draft of IEEE Std 802.16-2004 was prepared and finalized for IEEE Ballot:

Aditya Agrawal
Gordon Antonello
Reza Arefi
Eli Avivi
Dean Chang
Naftali Chayat
Rémi Chayer
Brian Eidson
Carl Eklund
Marc Engels
Avraham Freedman
G. Jack Garrison
Marianna Goldhammer
Zion Hadad
David Johnston
Panyuh Joo
Tal Kaitz
Phil Kelly
Ofer Kelman
Brian Kiernan
Itzik Kitroser
Changhoi Koo
Jonathan Labs
Yigal Leiba
Barry Lewis
Lingjie Li
John Liebetreu
Lars Lindh
Hui-Ling Lou
Heinz Lycklama
Roger B. Marks
Russell McKown
Andrew Middleton
Ronald Murias
Robert Nelson
Kamlesh Rath
Gene Robinson
Yossi Segal
Radu Selea
James Simkins
Kenneth Stanwood
Carl Stevenson
Shawn Taylor
Rainer Ullmann
Nico van Waes
Eyal Verbin
Arthur Wang
Lei Wang
Stanley Wang
Vladimir Yanover

The following members of the IEEE 802.16 Working Group on Broadband Wireless Access participated in the Working Group Letter Ballot in which IEEE Std 802.16f-2005 was prepared and finalized for IEEE Ballot:

Edward Agis
Aditya Agrawal
Baraa Al-Dabagh
Mario Aliotta
Dov Andelman
Gordon Antonello
Sanjeev Athalye
Eli Avivi
Raja Banerjea
Phillip Barber
Kevin Baum
Izhar Bentov
Rajesh Bhalla
Sean Cai
David Castelow
Giulio Cavalli
Dean Chang
Jae Hwan Chang
Yong Chang
Naftali Chayat
Rémi Chayer
Aik Chindapol
Jaeweon Cho
Hyoung-Jin Choi
Joey Chou
Jin Yong Chung
José Costa
Mark Cudak
Frank Draper
John Dring
Lester Eastwood
Brian Eidson
Carl Eklund
Yigal Eliaspur
Roger Eline
Oren Elkayam
Mo-Han Fong
Bogdan Franovici
Avraham Freedman
Mariana Goldhamer
Reza Golshan
Qiang Guo
Zion Hadad
Yung Hahn
Jun Han
John Haskin
Prakash Iyer
Moo Ryong Jeong
Brian Johnson
Panyuh Joo
Tal Kaitz
Olfer Kelman
Adam Kerr
Brian Kiernan
Jeonghwi Kim
Jung Won Kim
Yong Bum Kim
YoungKyun Kim
Itzik Kitroser
Changhoi Koo
Lalit Kotecha
Margaret LaBrecque
Jonathan Labs
Jules Pierre Lamoureux
Chang-jae Lee
Jae Hak Lee
Seong Choon Lee
Yigal Leiba
Barry Lewis
Xiaodong Li
John Liebetreu
Hyoungsoo Lim
Titus Lo
Hui-Ling Lou
Heinz Lycklama
Michael Lynch
Martin Lysejko
Seung Joo Maeng
David Maez
Jeffrey Mandin
Kevin Mankin
Roger B. Marks
Russell McKown
Scott Migaldi
James Mollenauer
Dong-Il (Stephan) Moon
Ronald Murias
Robert Nelson
Gunnar Nitsche
Paul Odlyzko
Shlomo Ovadia
Pyung-Su Park
Trevor Pearman
Greg Phillips
Jose Puthenkulam
Kamlesh Rath
Maximilian Riegel
Chris Rogers
Kiseon Ryu
Andrew Sago
Atul Salvekar
Randall Schwartz
Yossi Segal
Radu Selea
Mohammad Shakouri
N.K. Shankaranarayanan
Eli Shasha
James Simkins
Jung Je Son
Yeong Moon Son
Kenneth Stanwood
Shawn Taylor
Wen Tong
Rainer Ullmann
Mano Vafai
Eyal Verbin
Frederick Vook
Arthur Wang
Irving Wang
Lei Wang
Stanley Wang
Alfred Wieczorek
Hassan Yaghoobi
Vladimir Yanover
Chulsik Yoon
Chang Wahn Yu
Peiying Zhu

The following members of the IEEE 802.16 Working Group on Broadband Wireless Access participated in the Working Group Letter Ballot in which IEEE Std 802.16e-2005 was prepared and finalized for IEEE Ballot:

Aditya Agrawal
Baraa Al-Dabagh
Mario Aliotta
Eli Avivi
Phillip Barber
David Castelow
Dean Chang
Naftali Chayat
Rémi Chayer
Brian Eidson
Carl Eklund
Roger Eline
Avraham Freedman
Marianna Goldhammer
Zion Hadad
David Johnston
Panyuh Joo
Tal Kaitz
Ofer Kelman
Brian Kiernan
Itzik Kitroser
Changhoi Koo
Jonathan Labs
Yigal Leiba
Lingjie Li
John Liebetreu
Hyoungsoo Lim
Lars Lindh
Heinz Lycklama
Roger B. Marks
Russell McKown
Andrew Middleton
Ron Murias
Robert Nelson
Greg Phillips
Kamlesh Rath
Gene Robinson
Randall Schwartz
Yossi Segal
Radu Selea
James Simkins
Ken Stanwood
Carl Stevenson
Shawn Taylor
David Trinkwon
Rainer Ullmann
Eyal Verbin
Lei Wang
Vladimir Yanover
Choong-il Yeh
Chulsik Yoon

The following participated as nonmembers in the Working Group Letter Ballot for IEEE Std 802.16e-2005:

Chang-Jae Lee
Jeffrey Mandin
Jose Puthenkulam

The following members of the IEEE 802.16 Working Group on Broadband Wireless Access participated in the Working Group Letter Ballot in which IEEE Std 802.16-2004/Cor1-2005 was prepared and finalized for IEEE Ballot:

Ray Abrishami
Aditya Agrawal
Baraa Al-Dabagh
Mario Aliotta
Dov Andelman
Sanjeev Athalye
Eli Avivi
Raja Banerjea
Kevin Baum
Izhar Bentov
Rajesh Bhalla
Eckard Bogenfeld
Sean Cai
David Castelow
Giulio Cavalli
Chan-Byoung Chae
Dean Chang
Jae Hwan Chang
Sungcheol Chang
Yong Chang
Naftali Chayat
Rémi Chayer
Tao Chen
Yuehua (Lucy) Chen
Aik Chindapol
Jaehee Cho
Jaeweon Cho
Kihyoung Cho
Seokheon Cho
Hyoung-Jin Choi
Joey Chou
Jin Young Chun
Jin Yong Chung
Kyuhyuk Chung
José Costa
Mark Cudak
Frank Draper
Lester Eastwood
Carl Eklund
Yigal Eliaspur
Roger Eline
Torsten Fahldieck
Yonggang Fang
Mo-Han Fong
Bogdan Franovici
Avraham Freedman
Nikhil Goel
Mariana Goldhamer
Reza Golshan
Jin Guo
Qiang Guo
Zion Hadad
Yung Hahn
Jun Han
Jeff Harrang
Haixiang He
Zhaoyun (Laura) Huang
John Humbert
Seung Ku Hwang
Jiho Jang
Jaeho Jeon
Moo Ryong Jeong
Yong Seok Jin
Brian Johnson
David Johnston
Panyuh Joo
Tal Kaitz
Ravi Kalavakunta
Samuel Kang
Ofer Kelman
Adam Kerr
Brian Kiernan
Beomjoon Kim
Bong Ho Kim
Chong-kwon Kim
Jaeyoel Kim
Jeong-Heon Kim
Jeonghwi Kim
Jung Won Kim
Min Sung Kim
Ronny (Yong-Ho) Kim
Yong Bum Kim
Young Kyun Kim
Itzik Kitroser
Chris Knudsen
Changhoi Koo
Havish Koorapaty
Lalit Kotecha
Denesh Krishnasamy
Dongseung Kwon
Margaret LaBrecque
Jonathan Labs
Jules Pierre Lamoureux
Chang-jae Lee
Jae Hak Lee
Sungjin Lee

Yigal Leiba
Barry Lewis
Jun Li
Xiaodong Li
Geunhwi Lim
Hyoung Kyu Lim
Hyoungsoo Lim
Erik Lindskog
Titus Lo
Hui-Ling Lou
Heinz Lycklama
Michael Lynch
Martin Lysejko
Seung Joo Maeng
David Maez
Jeffrey Mandin
Roger B. Marks
Russell McKown
Scott Migaldi
James Mollenauer
Ollivier Mont-Reynaud
Ronald Murias
K. S. Natarajan
Gunnar Nitsche
Paul Odlyzko
Min Seok Oh
Masoud Olfat
Shlomo Ovadia
Joonho Park
Pyung-Su Park
Youngsoo Park
Trevor Pearman
Greg Phillips
Paul Piggin
Ambroise Popper
Jose Puthenkulam
Kamlesh Rath
Anthony Reid
Eric Reifsnider
Russ Reynolds
Maximilian Riegel
Chris Rogers
Shane Rogers
Wonil Roh
Byung-Han Ryu
Kiseon Ryu
Andrew Sago
Atul Salvekar
Randall Schwartz
Christian Seagren
Yossi Segal
Radu Selea
N.K. Shankaranarayanan
Eli Shasha
James Simkins
Jung Je Son
Yeong Moon Son
Ken Stanwood
Shawn Taylor
Wen Tong
Rainer Ullmann
Mano Vafai
Eyal Verbin
Frederick Vook
Arthur Wang
Guo Qiang Wang
Irving Wang
Jing Wang
Lei Wang
Stanley Wang
Alfred Wieczorek
Geng Wu
Jun Wu
Hassan Yaghoobi
Ran Yaniv
Vladimir Yanover
Choong-Il Yeh
Kunmin Yeo
Chulsik Yoon
Wenzhong Zhang
Keqiang Zhu
Peiying Zhu

The following members of the IEEE 802.16 Working Group on Broadband Wireless Access participated in the Working Group Letter Ballot in which IEEE Std 802.16-2004/Cor1-2005 was prepared and finalized for IEEE Ballot:

Ray Abrishami
Edward Agis
Aditya Agrawal
Siavash Alamouti
Murtaza Ali
Mario Aliotta
Dov Andelman
Gordon Antonello
Eli Avivi
Phillip Barber
Kevin Baum
Rajesh Bhalla
Yufei Blankenship
Eckard Bogenfeld
Achim Brandt
Thomas Brown
Sean Cai
James Carlo
Giulio Cavalli
Jaesun Cha
Chan-Byoung Chae
Dean Chang
Jae Hwan Chang
Sungcheol Chang
Yong Chang
Naftali Chayat
RÈmi Chayer
Jennifer Chen
Yuehua (Lucy) Chen
Aik Chindapol
Hua (Mary) Chion
Jaehee Cho
Jaeweon Cho
Kihyoung Cho
Seijei Cho
Seokheon Cho
Hyoung-Jin Choi
Yang-Seok Choi
Joey Chou
Jin Young Chun
JosÈ Costa
Mark Cudak
Shujun Dang
Wim Diepstraten
Frank Draper
Krzysztof Dudzinski
Lester Eastwood
Tomas Edler
Carl Eklund
Yigal Eliaspur
Frank Exeler
Torsten Fahldieck
Yonggang Fang
Peretz Feder
Dazi Feng
Mo-Han Fong
Avraham Freedman
Yan Fu
Mike Geipel
Pieter-Paul Giesberts
Nikhil Goel
Mariana Goldhamer
Reza Golshan
David Grandblaise
Qiang Guo
Zion Hadad
Jun Han
Jung Ho Han
Seishi Hanaoka
Jeff Harrang
Haixiang He
Gregory Scott Henderson
Michael Hoghooghi
Chang-Lung Hsiao
Haiming Huang
John Humbert
Yerang Hur
InSeok Hwang
Bin-Chul Ihm
Jiho Jang
Jaeho Jeon
David Johnston
Panyuh Joo
Hyunjeong Kang
Ivy Kelly
Ofer Kelman
Brian Kiernan
Beomjoon Kim
Bong Ho Kim
Byoung-Jo Kim
Dae-Joong Kim
Jaeyoel Kim
Jung Won Kim
Min Sung Kim
Ronny (Yong-Ho) Kim
Youngho Kim
Itzik Kitroser
Chris Knudsen
Changhoi Koo
Havish Koorapaty
Lalit Kotecha
Toshiyuki Kuze
Dong Seung Kwon
Jonathan Labs
Kari Laihonen
Jules Pierre Lamoureux
Chang-jae Lee
Chi-Chen Lee
Jae Hak Lee
Mihyun Lee
Sungjin Lee
Yigal Leiba
Jia-Ru Li
Jiang Li
Kemin Li
Li Li
Thomas Li
Xiaodong Li
Yongmao Li
Gaspare Licitra
Aeri Lim
Geunhwi Lim
Hyoung Kyu Lim
Hyoungsoo Lim
Zhibin Lin
Titus Lo
Hui-Ling Lou
Heinz Lycklama
Michael Lynch
Steve Ma
Seung Joo Maeng
David Maez
Mahesh Makhijani
Jeffrey Mandin
Roger B. Marks
David McGinniss
Scott Migaldi
James Mollenauer
Roland Muenzner
Willem Mulder
Ronald Murias
Kenichi Nakamura
K.S. Natarajan
Mitsuo Nohara
Paul Odlyzko
Shlomo Ovadia
David Paranchych
Youngsoo Park
Roger Peterson
Bonnie Petti
Greg Phillips
Paul Piggin
Ambroise Popper
Scott Probasco
Jose Puthenkulam
Nanjian (Jeff) Qian
Hongyun Qu
Shyamal Ramachandran
Frank Rayal
Eric Reifsnider
Francis Retnasothie
Maximilian Riegel
Wonil Roh
Herbert Ruck
Kiseon Ryu
Andrew Sago
Yousuf Saifullah
Kenji Saito
Atul Salvekar
Jˆrg Schmidt
Christian Seagren
Yossi Segal
Radu Selea
N.K. Shankaranarayanan
Eliyahu Shasha
Gang Shen
Yabing Shen

James Simkins
Sten Sjoberg
Jung Je Son
Yeong Moon Son
Kenneth Stanwood
Kyungjoo Suh
Xiangguo +Tang
Yongjoo Tcha
Wen Tong
Shiau-He Tsai
Rainer Ullmann
Mano Vafai
Lucia Valbonesi
Richard Van Leeuwen
Eyal Verbin
Dorin Viorel
Frederick Vook
Arthur Wang
Fan Wang
Guo qiang Wang
Irving Wang
Lei Wang
Stanley Wang
Mattias Wennstrom
Alfred Wieczorek
Geng Wu
Jun Wu
Xuyong Wu
David Xiang
Ling Xu
Shanshan Xu
Hassan Yaghoobi
Weidong Yang
Yunsong Yang
Ran Yaniv
Vladimir Yanover
Choong Il Yeh
Hujun Yin
Chulsik Yoon
Soon Young Yoon
Aeran Youn
Jungnam Yun
Mi-Young Yun
Nader Zein
Wenfeng Zhang
Zhijian Zhang
Ruobin Zheng
Qun Zhou
Peiying Zhu
Ilan Zohar

The following members of the IEEE 802.16 Working Group on Broadband Wireless Access participated in the Working Group Letter Ballot in which IEEE Std 802.16g-2007 was prepared and finalized for IEEE Ballot:

Ray Abrishami
Edward Agis
Aditya Agrawal
Siavash Alamouti
Murtaza Ali
Mario Aliotta
Dov Andelman
Gordon Antonello
Eli Avivi
Phillip Barber
Kevin Baum
Rajesh Bhalla
Yufei Blankenship
Eckard Bogenfeld
Achim Brandt
Thomas Brown
Sean Cai
James Carlo
Giulio Cavalli
Jaesun Cha
Chan-Byoung Chae
Dean Chang
Jae Hwan Chang
Sungcheol Chang
Yong Chang
Naftali Chayat
Rémi Chayer
Jennifer Chen
Yuehua (Lucy) Chen
Aik Chindapol
Hua (Mary) Chion
Jaehee Cho
Jaeweon Cho
Kihyoung Cho
Seijei Cho
Seokheon Cho
Hyoung-Jin Choi
Yang-Seok Choi
Joey Chou
Jin Young Chun
José Costa
Mark Cudak
Shujun Dang
Wim Diepstraten
Frank Draper
Krzysztof Dudzinski
Lester Eastwood
Tomas Edler
Carl Eklund
Yigal Eliaspur
Frank Exeler
Torsten Fahldieck
Yonggang Fang
Peretz Feder
Dazi Feng
Mo-Han Fong
Avraham Freedman
Yan Fu
Mike Geipel
Pieter-Paul Giesberts
Nikhil Goel
Mariana Goldhamer
Reza Golshan
David Grandblaise
Qiang Guo
Zion Hadad
Jun Han
Jung Ho Han
Seishi Hanaoka
Jeff Harrang
Haixiang He
Gregory Scott Henderson
Michael Hoghooghi
Chang-Lung Hsiao
Haiming Huang
John Humbert
Yerang Hur
InSeok Hwang
Bin-Chul Ihm
Jiho Jang
Jaeho Jeon
David Johnston
Panyuh Joo
Hyunjeong Kang
Ivy Kelly
Ofer Kelman
Brian Kiernan
Beomjoon Kim
Bong Ho Kim
Byoung-Jo Kim
Dae-Joong Kim
Jaeyoel Kim
Jung Won Kim
Min Sung Kim
Ronny (Yong-Ho) Kim
Youngho Kim
Itzik Kitroser
Chris Knudsen
Changhoi Koo
Havish Koorapaty
Lalit Kotecha
Toshiyuki Kuze
Dong Seung Kwon
Jonathan Labs
Kari Laihonen
Jules Pierre Lamoureux
Chang-jae Lee
Chi-Chen Lee
Jae Hak Lee
Mihyun Lee
Sungjin Lee
Yigal Leiba
Jia-Ru Li
Jiang Li
Kemin Li

Li Li
Thomas Li
Xiaodong Li
Yongmao Li
Gaspare Licitra
Aeri Lim
Geunhwi Lim
Hyoung Kyu Lim
Hyoungsoo Lim
Zhibin Lin
Titus Lo
Hui-Ling Lou
Heinz Lycklama
Michael Lynch
Steve Ma
Seung Joo Maeng
David Maez
Mahesh Makhijani
Jeffrey Mandin
Roger B. Marks
David McGinniss
Scott Migaldi
James Mollenauer
Roland Muenzner
Willem Mulder
Ronald Murias
Kenichi Nakamura
K.S. Natarajan
Mitsuo Nohara
Paul Odlyzko
Shlomo Ovadia
David Paranchych
Youngsoo Park
Roger Peterson
Bonnie Petti
Greg Phillips
Paul Piggin
Ambroise Popper
Scott Probasco
Jose Puthenkulam
Nanjian (Jeff) Qian
Hongyun Qu
Shyamal Ramachandran
Frank Rayal
Eric Reifsnider
Francis Retnasothie
Maximilian Riegel
Wonil Roh
Herbert Ruck
Kiseon Ryu
Andrew Sago
Yousuf Saifullah
Kenji Saito
Atul Salvekar
Jörg Schmidt
Christian Seagren
Yossi Segal
Radu Selea
N.K. Shankaranarayanan
Eliyahu Shasha
Gang Shen
Yabing Shen
James Simkins
Sten Sjoberg
Jung Je Son
Yeong Moon Son
Kenneth Stanwood
Kyungjoo Suh
Xiangguo Tang
Yongjoo Tcha
Wen Tong
Shiau-He Tsai
Rainer Ullmann
Mano Vafai
Lucia Valbonesi
Richard Van Leeuwen
Eyal Verbin
Dorin Viorel
Frederick Vook
Arthur Wang
Fan Wang
Guo qiang Wang
Irving Wang
Lei Wang
Stanley Wang
Mattias Wennstrom
Alfred Wieczorek
Geng Wu
Jun Wu
Xuyong Wu
David Xiang
Ling Xu
Shanshan Xu
Hassan Yaghoobi
Weidong Yang
Yunsong Yang
Ran Yaniv
Vladimir Yanover
Choong Il Yeh
Hujun Yin
Chulsik Yoon
Soon Young Yoon
Aeran Youn
Jungnam Yun
Mi-Young Yun
Nader Zein
Wenfeng Zhang
Zhijian Zhang
Ruobin Zheng
Qun Zhou
Peiying Zhu
Ilan Zohar

Contents

List of figures

List of tables

IEEE Standard for
Local and metropolitan area networks

Part 16: Air Interface for Broadband Wireless Access Systems

IMPORTANT NOTICE: This standard is not intended to ensure safety, security, health, or environmental protection in all circumstances. Implementers of the standard are responsible for determining appropriate safety, security, environmental, and health practices or regulatory requirements.

This IEEE document is made available for use subject to important notices and legal disclaimers. These notices and disclaimers appear in all publications containing this document and may be found under the heading "Important Notice" or "Important Notices and Disclaimers Concerning IEEE Documents." They can also be obtained on request from IEEE or viewed at http://standards.ieee.org/IPR/disclaimers.html.

1. Overview

1.1 Scope

This standard specifies the air interface, including the medium access control layer (MAC) and physical layer (PHY), of combined fixed and mobile point-to-multipoint broadband wireless access (BWA) systems providing multiple services. The MAC is structured to support multiple PHY specifications, each suited to a particular operational environment.

1.2 Purpose

This standard enables rapid worldwide deployment of innovative, cost-effective, and interoperable multivendor broadband wireless access products, facilitates competition in broadband access by providing alternatives to wireline broadband access, encourages consistent worldwide spectrum allocation, and accelerates the commercialization of broadband wireless access systems.

1.3 Variants and frequency bands

Several conforming variants of this standard are specified. The appropriate variant depends on the radio frequency band in which it operates. The primary bands of interest are described in 1.3.1 through 1.3.3. The variants are listed in 1.3.4.

1.3.1 10–66 GHz licensed bands

The 10–66 GHz bands provide a physical environment where, due to the short wavelength, line-of-sight (LOS) is required and multipath is negligible. In the 10–66 GHz band, channel bandwidths of 25 MHz or 28 MHz are typical. With raw data rates in excess of 120 Mb/s, this environment is well suited for point-to-multipoint (PMP) access serving applications from small office/home office (SOHO) through medium to large office applications.

The single-carrier modulation air interface specified herein for 10–66 GHz shall be known as the "WirelessMAN-SC™" air interface.

1.3.2 Frequencies below 11 GHz

Frequencies below 11 GHz provide a physical environment where, due to the longer wavelength, LOS is not necessary and multipath may be significant. The ability to support near-LOS and non-LOS (NLOS) scenarios requires additional PHY functionality, such as the support of advanced power management techniques, interference mitigation/coexistence, and multiple antennas.

1.3.3 License-exempt frequencies below 11 GHz (primarily 5–6 GHz)

The physical environment for the license-exempt bands below 11 GHz is similar to that of the licensed bands in the same frequency range, as described in 1.3.2. However, the license-exempt nature introduces additional interference and co-existence issues, whereas regulatory constraints limit the allowed radiated power. In addition to the features described in 1.3.2, the PHY and MAC introduce mechanisms to facilitate the detection and avoidance of interference and the prevention of harmful interference into other users including specific spectrum users identified by regulation. This includes a mechanism for regulatory compliance called dynamic frequency selection (DFS).

It is recognized that some administrations require notification of terminal location for certain services in some license-exempt bands, which is a form of licensing. Conversely, it is possible to have uncoordinated usage within a licensed allocation. In these and other similar cases, the pertinent issues for license-exempt usage remain as described in the preceding paragraph.

In the context of this standard, the use of the term "license-exempt frequencies" or "license-exempt bands" should be taken to mean the situation where licensing authorities do not coordinate individual assignments of frequency bands to operators, regardless of whether the spectrum in question has a particular regulatory status as license-exempt or licensed.

1.3.4 Air interface variant nomenclature and compliance

Table 1 summarizes the nomenclature for the various air interface variants in this standard.

Table 1—Air interface variant nomenclature and compliance

Designation	Applicability	PHY specification	System features	Duplexing alternative
WirelessMAN-SC Release 1.0	10–66 GHz	8.1	12.1	TDD FDD
Fixed WirelessMAN-OFDM™	Below 11 GHz licensed bands	8.3	12.3	TDD FDD

Table 1—Air interface variant nomenclature and compliance *(continued)*

Designation	Applicability	PHY specification	System features	Duplexing alternative
Fixed WirelessMAN-OFDMA	Below 11 GHz licensed bands	8.4	12.4	TDD FDD
WirelessMAN-OFDMA TDD Release 1.0	Licensed bands below 11 GHz	8.4	12.5	TDD
WirelessMAN-OFDMA TDD Release 1.5	Licensed bands below 11 GHz	8.4	12.6	TDD
WirelessMAN-OFDMA FDD Release 1.5	Licensed bands below 11 GHz	8.4	12.7	FDD
WirelessHUMAN™	Below 11 GHz license-exempt bands	8.4 and 8.5	AAS (6.3.7.6) ARQ (6.3.4) STC (8.3.8, 8.4.8)	TDD

All implementations of this standard shall comply with the requirements of Clause 6 and Clause 7.

Implementations of this standard for any applicable frequencies between 10 GHz and 66 GHz shall comply with the WirelessMAN-SC PHY as described in 8.1.

Implementations of this standard for licensed frequencies below 11 GHz (such as those listed in B.1) shall either comply with the WirelessMAN-OFDM PHY as described in 8.3, the WirelessMAN-OFDMA PHY as described in 8.4, or the WirelessMAN-SC PHY as described in 8.1 for licensed frequencies above 10 GHz.

Implementations of this standard for license-exempt frequencies below 11 GHz (such as those listed in B.1) shall comply with the WirelessMAN-OFDM PHY as described in 8.3, or the WirelessMAN-OFDMA PHY as described in 8.4. They shall further comply with the DFS protocols (6.3.15) (where mandated by regulation) and with 8.5.

1.4 Reference models

Figure 1 illustrates the reference model and scope of this standard.

The MAC comprises three sublayers. The service-specific convergence sublayer (CS) provides any transformation or mapping of external network data, received through the CS service access point (SAP), into MAC service data units (SDUs) received by the MAC common part sublayer (CPS) through the MAC SAP. This includes classifying external network SDUs and associating them to the proper MAC service flow identifier (SFID) and connection identifier (CID). It may also include such functions as payload header suppression (PHS). Multiple CS specifications are provided for interfacing with various protocols. The internal format of the CS payload is unique to the CS, and the MAC CPS is not required to understand the format of or parse any information from the CS payload.

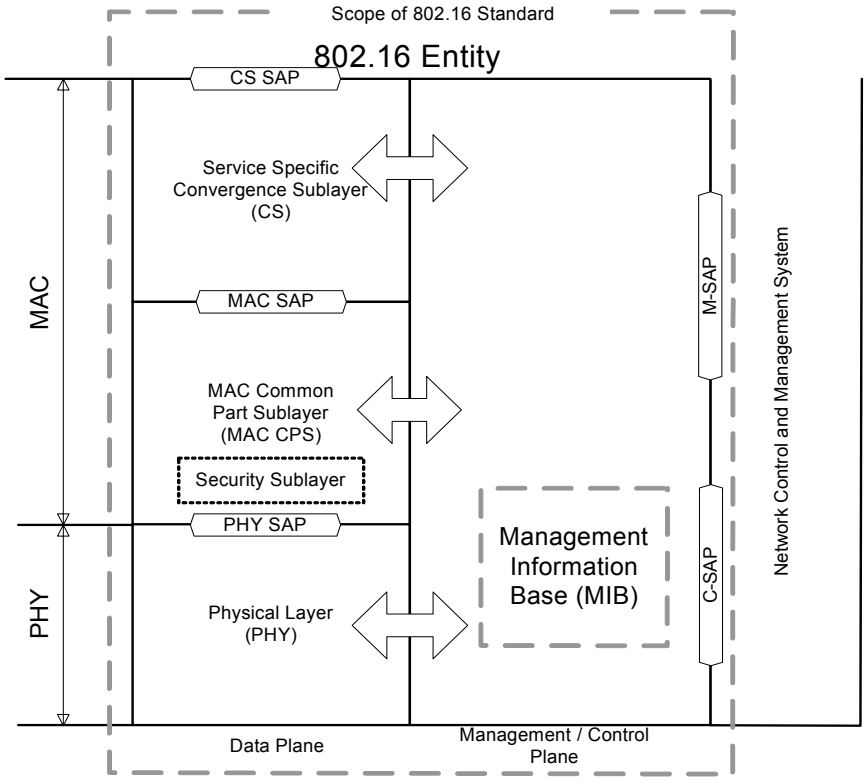

Figure 1— IEEE Std 802.16 Protocol reference model

The MAC CPS provides the core MAC functionality of system access, bandwidth allocation, connection establishment, and connection maintenance. It receives data from the various CSs, through the MAC SAP, classified to particular MAC connections. An example of MAC CPS service definition is given in Annex C. Quality of service (QoS) is applied to the transmission and scheduling of data over the PHY.

The MAC also contains a separate security sublayer providing authentication, secure key exchange, and encryption.

Data, PHY control, and statistics are transferred between the MAC CPS and the PHY via the PHY SAP (which is implementation specific).

The PHY definition includes multiple specifications, each appropriate to a particular frequency range and application. The various PHY specifications supported are discussed in Clause 8.

The IEEE 802.16 devices can include Subscriber Stations (SS) or Mobile Stations (MS), or Base Stations (BS). As the IEEE 802.16 devices may be part of a larger network and therefore would require interfacing with entities for management and control purposes, a Network Control and Management System (NCMS) abstraction has been introduced in this standard as a “black box” containing these entities. The NCMS abstraction allows the PHY/MAC layers specified in IEEE Std 802.16 to be independent of the network architecture, the transport network, and the protocols used at the backend and therefore allows greater flexibility. NCMS logically exists at BS side and SS/MS side of the radio interface, termed NCMS(BS) and NCMS(SS/MS), respectively. Any necessary inter-BS coordination is handled through the NCMS(BS).

This specification includes a Control SAP (C-SAP) and Management SAP (M-SAP) that expose control plane and management plane functions to upper layers. The C_SAP and M-SAP interfaces are described in Clause 14. The NCMS uses the C-SAP and M-SAP to interface with the IEEE 802.16 entity. In order to provide correct MAC operation, NCMS shall be present within each SS/MS. The NCMS is a layer independent entity that may be viewed as a management entity or control entity. General system management entities can perform functions through NCMS and standard management protocols can be implemented in the NCMS.

1.4.1 Management reference model

Figure 2 shows a management reference model of BWA networks. It consists of a network management system (NMS), managed nodes, and a Network Control System. Managed nodes, such as BS, MS and SS, collect and store the managed objects in the format of WirelessMAN Interface MIB (e.g., wmanIfMib) and Device MIB (e.g., wmanDevMib) that are made available to NMSs via management protocols, such as Simple Network Management Protocol (SNMP). A Network Control System contains the service flow and the associated QoS information that have to be populated to BS when a SS or MS enters into a BS network.

The management information between SS/MS and BS will be carried over the secondary management connection for managed SS or MS. If the secondary management connection does not exist, the SNMP messages, or other management protocol messages, may go through another interface in the customer premise or on a transport connection over the air interface.

.

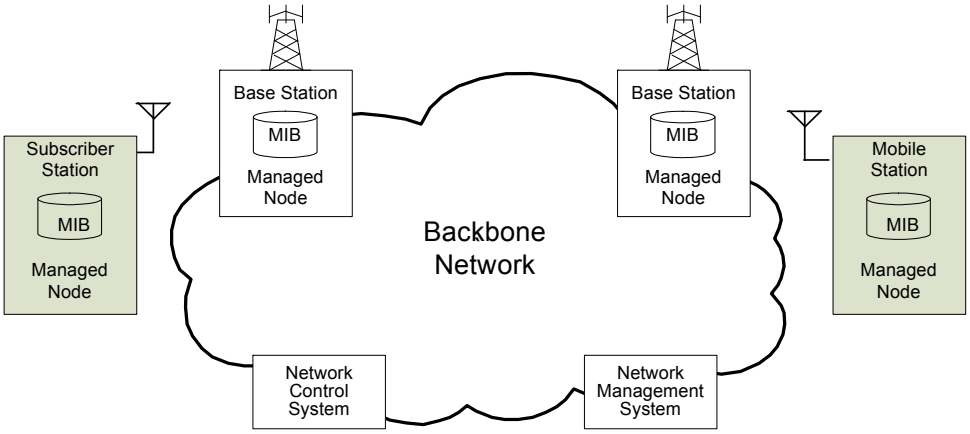

Figure 2— BWA WirelessMAN network management reference model

1.4.2 Handover (HO) process

The HO process in which an MS migrates from the air-interface provided by one BS to the air-interface provided by another BS is defined in 6.3.21.2.

1.4.3 IEEE 802.16 entity

An IEEE 802.16 entity is defined as the logical entity in an SS/MS or BS that comprises the PHY and MAC layers of the Data Plane and the Management/Control Plane.

1.4.4 Network reference model

Figure 3 describes a simplified network reference model. Multiple SS or MS may be attached to a BS. SS or MS communicate to the BS over the U interface using a Primary Management Connection, a Basic Connection, or a Secondary Management Connection.

.

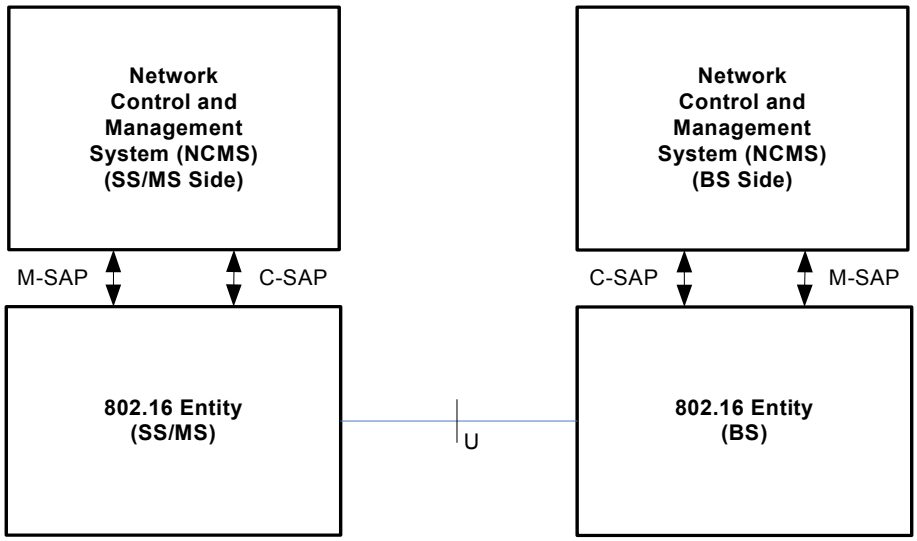

Figure 3—IEEE 802.16 Network reference model

1.4.4.1 SS/MS and BS Interface

This standard observes the following correlation:

— MAC management PDUs that are exchanged on the basic management connection trigger or are triggered by primitives that are exchanged over the C-SAP.
— MAC management PDUs that are exchanged on the primary management connection trigger or are triggered by primitives that are exchanged over either the C-SAP or the M-SAP depending on the particular management or control operation.
— Messages that are exchanged over the secondary management connection trigger or are triggered by primitives that are exchanged over the M-SAP.

1.4.4.2 IEEE 802.16 entity to NCMS Interface

This interface is a set of SAP between an IEEE 802.16 entity and NCMS and is represented in Figure 3. It is decomposed into two parts: the M-SAP is used for less time sensitive Management plane primitives and the C-SAP is used for more time sensitive Control plane primitives that support handovers, security context management, radio resource management, and low power operations (such as idle mode and paging functions).

1.4.5 Management SAP (M-SAP)

The Management SAP may include, but is not limited to primitives related to the following:

— System configuration
— Monitoring statistics
— Notifications/Triggers
— Multi-mode interface management

The NCMS interacts with the MIB through the M-SAP in a method not defined in this standard.

1.4.6 Control SAP (C-SAP)

The Control SAP may include, but is not limited to primitives related to the following:

— Handovers (e.g., notification of HO request from MS)
— Idle mode mobility management (e.g., Mobile entering idle mode)
— Subscriber and session management (e.g., Mobile requesting session setup)
— Radio resource management
— AAA server signaling (e.g., EAP payloads)
— Media Independent Handover Function Services
— Location detection reporting capability

1.5 Managed objects

The definition of managed objects in this standard is expressed in IETF RFC 2578.[1] It supports a management protocol agnostic approach, including SNMP.

[1]Information on references can be found in Clause 2.

2. Normative references

The following referenced documents are indispensable for the application of this standard. For dated references, only the edition cited applies. For undated references, the latest edition of the referenced document (including any amendments or corrigenda) applies.

ATM Forum Specification af-uni-0010.002, ATM User-Network Interface Specification, Version 3.1, September 1994.[2]

ATM Forum Specification af-sig-0061.000, ATM User-Network Interface (UNI) Signalling Specification, Version 4.0, July 1996.

ETSI EN 301 213-3, Fixed Radio Systems; Point-to-multipoint equipment; Point-to-multipoint digital radio systems in frequency bands in the range 24,25 GHz to 29,5 GHz using different access methods; Part 3: Time Division Multiple Access (TDMA) methods, Version 1.3.1, September 2001.[3]

FIPS 46-3, Data Encryption Standard (DES), October 1999.[4]

FIPS 74, Guidelines for Implementing and Using the NBS Data Encryption Standard, April 1981.

FIPS 81, DES Modes of Operation, December 1980.

FIPS 180-1, Secure Hash Standard (SHS), April 1995.

FIPS 186-2, Digital Signature Standard (DSS), January 2000.

FIPS 197, Advanced Encryption Standard (AES).

IEEE Std 802®, IEEE Standards for Local and Metropolitan Area Networks: Overview and Architecture.[5, 6]

IEEE Std 802.1D™, IEEE Standard for Local and metropolitan Area Networks: Media Access Control (MAC) Bridges.[7]

IEEE Std 802.1Q, IEEE Standards for Local and Metropolitan Area Networks: Virtual Bridged Local Area Networks.

IEEE Std 802.2™ (ISO/IEC 8802-2: 1998), Information technology—Telecommunications and information exchange between systems—Local and metropolitan area networks—Specific requirements—Part 2: Logical Link Control.

IEEE Std 802.3™, IEEE Standard for Information technology—Telecommunications and information exchange between systems—Local and metropolitan area networks—Specific requirements—Part 3: Carrier sense multiple access with collision detection (CSMA/CD) access method and physical layer specifications.

[2]ATM Forum publications are available from the ATM Forum at http://www.atmforum.com/.

[3]ETSI publications are available from the European Telecommunications Standards Institute at http://www.etsi.org/.

[4]FIPS publications are available from the National Technical Information Service (NTIS), U. S. Dept. of Commerce, 5285 Port Royal Road, Springfield, VA 22161 (http://www.ntis.gov/).

[5]IEEE and 802 are registered trademarks in the U.S. Patent & Trademark Office, owned by the Institute of Electrical and Electronics Engineers, Incorporated.

[6]IEEE publications are available from the Institute of Electrical and Electronics Engineers, Inc., 445 Hoes Lane, Piscataway, NJ 08854, USA (http://standards.ieee.org/).

[7]IEEE standards referred to in Clause 2 are trademarks owned by the Institute of Electrical and Electronics Engineers, Incorporated.

IEEE Std 802.16.2™, IEEE Recommended Practice for Local and metropolitan area networks—Coexistence of Fixed Broadband Wireless Access Systems.

IEEE Std 802.21™-2008, IEEE Standard for Local and Metropolitan Area Networks: Media Independent Handover Services.

IETF RFC 791, "Internet Protocol," J. Postel, September 1981.[8]

IETF RFC 868, "Time Protocol," J. Postel, K. Harrenstien, May 1983.

IETF RFC 1042, "A Standard for the Transmission of IP Datagrams over IEEE 802 Networks," J. Postel, J. Reynolds, February 1988.

IETF RFC 1123, "Requirements for Internet Hosts—Application and Support," R. Braden, October 1989.

IETF RFC 1157, "A Simple Network Management Protocol (SNMP)," M. Schoffstall, M. Fedor, J. Davin, and J. Case, May 1990.

IETF RFC 1213, "Management Information Base for Network Management of TCP/IP-based internets: MIB-II," March 1991.

IETF RFC 2104, "HMAC: Keyed-Hashing for Message Authentication," H. Krawczyk, M. Bellare, R. Canetti, February 1997.

IETF RFC 2131, "Dynamic Host Configuration Protocol," R. Droms, March 1997.

IETF RFC 2349, "TFTP Timeout Interval and Transfer Size Options," G. Malkin and A. Harkin, May 1998.

IETF RFC 2373, "IP Version 6 Addressing Architecture," R. Hinden, S. Deering, July 1998. (http://www.ietf.org/rfc/rfc2373.txt)

IETF RFC 2459, "Internet X.509 Public Key Infrastructure Certificate and CRL Profile," R. Housley, W. Ford, W. Polk, D. Solo, January 1999.

IETF RFC 2460, "Internet Protocol, Version 6 (IPv6) Specification," S. Deering, R. Hinden, December 1998.

IETF RFC 2462, "IPv6 Stateless Address Autoconfiguration," S. Thomson, T. Narten, December 1998. (http://www.ietf.org/rfc/rfc2462.txt)

IETF RFC 2474, "Definition of the Differentiated Services Field (DS Field) in the IPv4 and IPv6 Headers," K. Nichols, S. Blake, F. Baker, D. Black, December 1998.

IETF RFC 2578, "Structure of Management Information Version 2 (SMIv2)," April 1999.

IETF RFC 2758, "Definitions of Managed Objects for Service Level Agreements Performance Monitoring," K. White, February 2000.

IETF RFC 2789, "Mail Monitoring MIB," N. Freed, S. Kille, March 2000. (http://www.ietf.org/rfc/rfc2789.txt)

IETF RFC 2863, "The Interfaces Group MIB," June, 2000.

IETF RFC 2865, "Remote Authentication Dial In User Service (RADIUS)" C. Rigney, et al, June 2000. (http://www.ietf.org/rfc/rfc2865.txt)

[8]IETF publications are available from the Internet Engineering Task Force at http://www.ietf.org/.

IETF RFC 3012, “Mobile IPv4 Challenge/Response Extensions,” C. Perkins, P. Calhoun, November 2000. (http://www.ietf.org/rfc/rfc3012.txt)

IETF RFC 3095, “RObust Header Compression (ROHC): Framework and four profiles: RTP, UDP, ESP, and uncompressed,” C. Bormann, et al, July 2001. (http://www.ietf.org/rfc/rfc3095.txt)

IETF RFC 3280, “Internet X.509 Public Key Infrastructure Certificate and Certificate Revocation List (CRL) Profile,” R. Housley, W. Polk, W. Ford, D. Solo, April 2002. (http://www.ietf.org/rfc/rfc3280.txt)

IETF RFC 3315, “Dynamic Host Configuration Protocol for IPv6 (DHCPv6),” R. Droms, et al, July 2003. (http://www.ietf.org/rfc/rfc3315.txt)

IETF RFC 3410, “Introduction and Applicability Statements for Internet-Standard Management Framework,” December 2002.

IETF RFC 3411, “An Architecture for Describing Simple Network Management Protocol (SNMP) Management Frameworks,” December 2002.

IETF RFC 3412, “Message Processing and Dispatching for the Simple Network Management Protocol (SNMP),” December 2002.

IETF RFC 3413, “Simple Network Management Protocol (SNMP) Applications,” December 2002.

IETF RFC 3414, “User-based Security Model (USM) for version 3 of the Simple Network Management Protocol (SNMPv3),” December 2002.

IETF RFC 3415, “View-based Access Control Model (VACM) for the Simple Network Management Protocol (SNMP),” December 2002.

IETF RFC 3418, “Management Information Base (MIB) for the Simple Network Management Protocol (SNMP),” December 2002.

IETF RFC 3545, “Enhanced Compressed RTP (CRTP) for Links with High Delay, Packet Loss and Reordering,” T. Koren, S. Casner, J. Geevarghese, B. Thompson, P. Ruddy, July 2003. (http://www.ietf.org/rfc/rfc3545.txt)

IETF RFC 3584, “Coexistence between Version 1, Version 2, and Version 3 of the Internet-standard Network Management Framework,” August 2003.

IETF RFC 3748, “Extensible Authentication Protocol (EAP),” B. Aboba, L. Blunk, J. Vollbrecht, J. Carlson, H. Levkowetz, June 2004. (http://www.ietf.org/rfc/rfc3748.txt)

IETF RFC 3759, “RObust Header Compression (ROHC): Terminology and Channel Mapping Examples,” L-E Jonsson, April 2004. (http://www.ietf.org/rfc/rfc3759.txt)

IETF RFC 3775, “Mobility Support in IPv6,” D. Johnson, C. Perkins, J. Arkko, June 2004. (http://www.ietf.org/rfc/rfc3775.txt)

IETF RFC 3825, “DHCP for Coordinate-based Location Configuration Information,” July 2004.

IETF RFC 4291, “IP Version 6 Addressing Architecture,” R. Hinden, S. Deering, February 2006.

Internet Assigned Numbers Authority (IANA), “Protocol Numbers,” <http://www.iana.org/assignments/protocol-numbers>, June 2001.

ISO/IEC 8824, Information processing systems—Open Systems Interconnection—Specification of Abstract Syntax Notation One (ASN.1), December 1987.[9]

ISO/IEC 8825, Information technology—Open Systems Interconnection—Specification of the Basic Encoding Rules for Abstract Syntax Notation One (ASN.1), May 1999.

ITU-T Recommendation X.25—Interface between Data Terminal Equipment (DTE) and Data Circuit-terminating Equipment (DCE) for terminals operating in the packet mode and connected to public data networks by dedicated circuit, October 1996.[10]

ITU-T Recommendation X.690, Information Technology—ASN.1 Encoding Rules: Specification of Basic Encoding Rules (BER), Canonical Encoding Rules (CER), and Distinguished Encoding Rules (DER), December 1997.

NIST Special Publication 800-38A—Recommendation for Block Cipher Modes of Operation—Methods and Techniques.

NIST Special Publication 800-38B—Recommendation for Block Cipher Modes of Operation: The CMAC Mode for Authentication.

PKCS #1 v2.0, RSA Cryptography Standard, RSA Laboratories, October 1998 <http://www.rsasecurity.com/rsalabs/pkcs/pkcs-1>.

WiMAX Forum® Mobile System Profile Release 1—IMT-2000 Edition.

WiMAX Forum Mobile System Profile Release 1.5—Common Part.

WiMAX Forum Mobile System Profile Release 1.5—FDD Specific Part.

WiMAX Forum Mobile System Profile Release 1.5—TDD Specific Part.

[9]ISO/IEC publications are available from the ISO Central Secretariat, Case Postale 56, 1, ch. de la Voie-Creuse, CH-1211, Geneve 20, Switzerland/Suisse or the IEC Sales Department, Case Postale 131, 3, rue de Varembe, CH-1211, Geneve 20, Switzerland/Suisse. They are also available in the United States from the Sales Department, American National Standards Institute, 11 West 42nd Street, 13th floor, New York, NY 10036, USA.

[10]ITU-T publications are available from the International Telecommunications Union, Place des Nations, CH-1211, Geneva 20, Switzerland/Suisse (http://www.itu.int/).

3. Definitions

For the purposes of this standard, the following terms and definitions apply. *The Authoritative Dictionary of IEEE Standards Terms* [B23][11] should be referenced for terms not defined in this clause.

3.1 active base station (BS): A BS that is informed of the mobile station (MS) capabilities, security parameters, service flows, and full medium access control layer (MAC) context information. For macro diversity handover (MDHO), the MS transmits/receives data to/from all active BSs in the diversity set.

3.2 adaptive antenna system (AAS): An array of antennas and associated signal processing that together is able to change its antenna radiation pattern dynamically to adjust to noise environment, interference and multipath.

3.3 adaptive modulation: A system's ability to communicate with another system using multiple burst profiles and a system's ability to subsequently communicate with multiple systems using different burst profiles.

3.4 adjacent subcarrier allocation: A permutation where the subcarriers are located adjacent to each other.

3.5 anchor base station (BS): For macro diversity handover (MDHO) or fast BS switching (FBSS) supporting mobile stations (MSs), a BS where the MS is registered, is synchronized, performs ranging, and monitors the downlink (DL) for control information. For FBSS supporting MSs, the anchor BS is the serving BS that is designated to transmit/receive data to/from the MS at a given frame.

3.6 Authenticator: Authenticator functionality is part of AAA Services, which is included in the NCMS. An authenticator is an entity at one end of a point-to-point link that facilitates authentication of a supplicant (MS) attached to the other end of that link. It can enforce authentication before allowing access to services that are accessible to the supplicant. The authenticator incorporates an AAA client functionality that enables it to communicate with AAA backend infrastructure (AAA based Authentication Server). The AAA server provides the Authenticator with authentication and authorization services over AAA protocols. The authenticator function contains a Key Distributor and may also include a Key Receiver function.

3.7 automatic repeat request (ARQ) block: A distinct unit of data that is carried on an ARQ-enabled connection. Such a unit is assigned a sequence number and is managed as a distinct entity by the ARQ state machines. Block size is a parameter negotiated during connection establishment.

3.8 backbone network: A communication mechanism by which two or more base stations (BSs) communicate to each other. It may also include communication with other networks. The method of communication for backbone networks is outside the scope of this standard.

3.9 bandwidth stealing: The use, by a subscriber station (SS), of a portion of the bandwidth allocated in response to a bandwidth request (BR) for a connection to send a BR or data for any of its connections.

NOTE—See also 6.3.6.[12]

3.10 base station (BS): A generalized equipment set providing connectivity, management, and control of the subscriber station (SS). *See also:* **active base station (BS)**, **anchor base station (BS), neighbor base station (BS)**, **serving base station (BS)**, **target base station (BS)**.

[11]The numbers in brackets correspond to the numbers of the bibliography in Annex A.

[12]Notes in text, tables, and figures are given for information only and do not contain requirements needed to implement this standard.

3.11 base station (BS) receive/transmit transition gap (RTG): A gap between the last sample of the uplink (UL) burst and the first sample of the subsequent downlink (DL) burst at the antenna port of the BS in a time division duplex (TDD) transceiver. This gap allows time for the BS to switch from receive (Rx) to transmit (Tx) mode. During this gap, the BS is not transmitting modulated data but simply allowing the BS transmitter carrier to ramp up and the Tx/Rx antenna switch to actuate. Not applicable for frequency division duplex (FDD) systems.

3.12 base station (BS) transmit/receive transition gap (TTG): A gap between the last sample of the downlink (DL) burst and the first sample of the subsequent uplink (UL) burst at the antenna port of the BS in a time division duplex (TDD) transceiver. This gap allows time for the BS to switch from transmit (Tx) to receive (Rx) mode. During this gap, the BS is not transmitting modulated data but simply allowing the BS transmitter carrier to ramp down, the Tx/Rx antenna switch to actuate, and the BS receiver section to activate. Not applicable for frequency division duplex (FDD) systems.

3.13 basic connection: Connection that is established during subscriber station (SS) initial ranging and used to transport delay-intolerant medium access control layer (MAC) management messages.

3.14 broadband: Having instantaneous bandwidths greater than around 1 MHz and supporting data rates greater than about 1.5 Mb/s.

3.15 broadband wireless access (BWA): Wireless access in which the connection(s) capabilities are broadband.

3.16 broadcast connection: The management connection used by the base station (BS) to send medium access control layer (MAC) management messages on a downlink (DL) to all subscriber stations (SSs). The broadcast connection is identified by a well-known connection identifier (CID). A fragmentable broadcast connection is a connection that allows fragmentation of broadcast MAC management messages.

NOTE—See Table 558.

3.17 burst profile: Set of parameters that describe the uplink (UL) or downlink (DL) transmission properties associated with an interval usage code. Each profile contains parameters such as modulation type, forward error correction (FEC) type, preamble length, guard times, etc. *See also*: **interval usage code**.

3.18 channel identifier (ChID): An identifier used to distinguish between multiple uplink (UL) channels, all of which are associated with the same downlink (DL) channel.

3.19 concatenation: The act of combining multiple medium access control layer (MAC) protocol data units (PDUs) into a single physical layer (PHY) service data unit (SDU).

3.20 connection: A unidirectional mapping between base station (BS) and subscriber station (SS) medium access control layer (MAC) peers. Connections are identified by a connection identifier (CID). The MAC defines two kinds of connections: management connections and transport connections. *See also*: **connection identifier (CID)**.

3.21 connection identifier (CID): A 16-bit value that identifies a transport connection or an uplink (UL)/ downlink (DL) pair of associated management connections [i.e., belonging to the same subscriber station (SS)] to equivalent peers in the medium access control layer (MAC) of the base station (BS) and SS. The CID address space is common (i.e., shared) between UL and DL and partitioned among the different types of connections. Security associations (SAs) also exist between keying material and CIDs. *See also*: **connection**.

NOTE—Table 558 specifies how the CID address space is partitioned among the different types of connections.

3.22 DC subcarrier: In an orthogonal frequency division multiplexing (OFDM) or orthogonal frequency division multiple access (OFDMA) signal, the subcarrier whose frequency would be equal to the radio frequency (RF) center frequency of the station.

3.23 diversity set: A list of active base stations (BSs) to the mobile station (MS). The diversity set is managed by the MS and BSs and is applicable to macro diversity handover (MDHO) and fast BS switching (FBSS).

3.24 downlink (DL): The direction from the base station (BS) to the subscriber station (SS).

3.25 downlink burst transition gap (DLBTG): The gap included on the trailing edge of each allocated downlink (DL) burst so that ramp-down can occur and delay-spread can clear receivers.

3.26 downlink channel descriptor (DCD): A medium access control layer (MAC) message that describes the physical layer (PHY) characteristics of a downlink (DL) channel.

3.27 downlink interval usage code (DIUC): An interval usage code specific to a downlink (DL). *See also*: **interval usage code**.

3.28 downlink map (DL-MAP): A medium access control layer (MAC) message that defines burst start times for both time division multiplex and time division multiple access (TDMA) by a subscriber station (SS) on the downlink (DL).

3.29 dynamic frequency selection (DFS): The ability of a system to switch to different physical radio frequency (RF) channels based on channel measurement criteria to conform to particular regulatory requirements.

3.30 dynamic service: The set of messages and protocols that allow the base station (BS) and subscriber station (SS) to add, modify, or delete the characteristics of a service flow.

3.31 fast base station switching (FBSS): Base station (BS) switching that utilizes a fast switching mechanism to improve link quality. The mobile station (MS) is only transmitting/receiving data to/from one of the active BS (anchor BS) at any given frame. The anchor BS can change from frame to frame depending on the BS selection scheme.

3.32 fixed wireless access: Wireless access application in which the locations of the base station (BS) and subscriber station (SS) are fixed in location during operation.

3.33 frame: A structured data sequence of fixed duration used by some physical layer (PHY) specifications. A frame may contain both an uplink (UL) subframe and a downlink (DL) subframe.

3.34 frequency assignment (FA): A logical assignment of downlink (DL) center frequency and channel bandwidth programmed to the base station (BS).

3.35 frequency assignment (FA) index: A network-specific logical FA index assignment. FA index assignment is used in combination with operator-specific configuration information provided to the mobile station (MS) in a method outside the scope of this standard.

3.36 frequency division duplex (FDD): A duplex scheme in which uplink (UL) and downlink (DL) transmissions use different frequencies but are typically simultaneous.

3.37 frequency offset index: An index number identifying a particular subcarrier in an orthogonal frequency division multiplexing (OFDM) or orthogonal frequency division multiple access (OFDMA) signal, which is related to its subcarrier index. Frequency offset indices may be positive or negative.

3.38 group key encryption key (GKEK): A random number generated by the base station (BS) or a network entity [e.g., an authentication and service authorization (ASA) server] used to encrypt the group traffic encryption keys (GTEKs) sent in broadcast messages by the BS to mobile stations (MSs) in the same multicast group.

3.39 handover (HO): The process in which a mobile station (MS) migrates from the air-interface provided by one base station (BS) to the air-interface provided by another BS. A break-before-make HO is where service with the target BS starts after a disconnection of service with the previous serving BS. A make-before-break HO is where service with the target BS starts before disconnection of the service with the previous serving BS.

3.40 initial ranging connection: A management connection used by the subscriber station (SS) and the base station (BS) during the initial ranging process. The initial ranging connection is identified by a well-known connection identifier (CID). This CID is defined as a constant value within the protocol since an SS has no addressing information available until the initial ranging process is complete.

NOTE—See Table 558.

3.41 interval usage code: A code identifying a particular burst profile that can be used by a downlink (DL) or uplink (UL) transmission interval.

3.42 Location Based Services (LBS): Services that are based on location data of the MS and/or BS in a network of IEEE 802.16 devices. Examples in location sensitized applications, emergency call origination tracking, equipment tracking etc.

3.43 macro diversity handover (MDHO): The process in which an mobile station (MS) migrates from the air-interface provided by one or more base stations (BSs) to the air-interface provided by one or more other BSs. This process is accomplished in the downlink (DL) by having two or more BSs transmitting the same medium access control layer (MAC) or physical layer (PHY) protocol data unit (PDU) to the MS so that diversity combining can be performed by the MS. In the uplink (UL), it is accomplished by having two or more BSs receiving (demodulating, decoding) the same PDU from the MS so that diversity combining of the received PDU can be performed among the BSs.

3.44 management connection: A connection used for transporting medium access control layer (MAC) management messages or standards-based messages required by the MAC. *For MAC management messages, see also:* **basic connection**, **primary management connection**, **broadcast connection, initial ranging connection**. *For standards-based messages required by the MAC, see also:* **secondary management connection**.

NOTE—Table 38 specifies which MAC management message is transmitted on which of the management connections.

3.45 minislot: A unit of uplink (UL) bandwidth allocation equivalent to n physical slots (PSs), where $n = 2^m$ and m is an integer ranging from 0 through 7.

3.46 mobile station (MS): A station in the mobile service intended to be used while in motion or during halts at unspecified points. An MS is always a subscriber station (SS) unless specifically excepted otherwise in this standard.

3.47 multicast polling group: A group of zero or more subscriber stations (SSs) that are assigned a multicast address for the purposes of polling.

3.48 multiple input multiple output (MIMO): A system employing at least two transmit (Tx) antennas and at least two receive (Rx) antennas to improve the system capacity, coverage, or throughput.

3.49 neighbor base station (BS): For any mobile station (MS), a BS (other than the serving BS) whose downlink (DL) transmission can be received by the MS.

3.50 Operator ID: Operator ID is an identifier of the network provider. The Operator ID is contained in the Base Station ID.

3.51 orderly power-down procedure: The procedure that the mobile station (MS) performs when powering down, for example, as directed by user input or as prompted by a automatic power-down mechanism.

3.52 packing: The act of combining multiple service data units (SDUs) from a higher layer into a single medium access control layer (MAC) protocol data unit (PDU).

3.53 Paging Controller: Paging controller is a unit that belongs to the idle mode services in the NCMS. The paging controller retains the MS state and operational parameters and/or administers paging activity for the MS while in idle mode.

3.54 payload header suppression (PHS): The process of suppressing the repetitive portion of payload headers at the sender and restoring the headers at the receiver.

3.55 Payload Header Suppression field (PHSF): A string of bytes representing the header portion of a protocol data unit (PDU) in which one or more bytes are to be suppressed (i.e., a snapshot of the uncompressed PDU header inclusive of suppressed and unsuppressed bytes).

3.56 payload header suppression index (PHSI): An 8-bit value that references the payload header suppression (PHS) rule.

3.57 payload header suppression mask (PHSM): A bit mask indicating which bytes in the Payload Header Suppression field (PHSF) to suppress and which bytes to not suppress.

3.58 payload header suppression size (PHSS): The length of the suppressed field in bytes. This value is equivalent to the number of bytes in the Payload Header Suppression field (PHSF) and also the number of valid bits in the payload header suppression mask (PHSM).

3.59 payload header suppression valid (PHSV): A flag that tells the sending entity to verify all bytes that are to be suppressed.

3.60 physical slot (PS): A unit of time, dependent on the physical layer (PHY) specification, for allocating bandwidth.

3.61 point-to-point (PtP): A mode of operation whereby a link exists between two network entities.

3.62 primary management connection: A connection that is established during initial subscriber station (SS) ranging and used to transport delay-tolerant medium access control layer (MAC) management messages.

3.63 Privacy Key Management (PKM) Protocol: A client/server model between the base station (BS) and subscriber station (SS) that is used to secure distribution of keying material.

3.64 protocol data unit (PDU): The data unit exchanged between peer entities of the same protocol layer. On the downward direction, it is the data unit generated for the next lower layer. On the upward direction, it is the data unit received from the previous lower layer (see Figure 4).

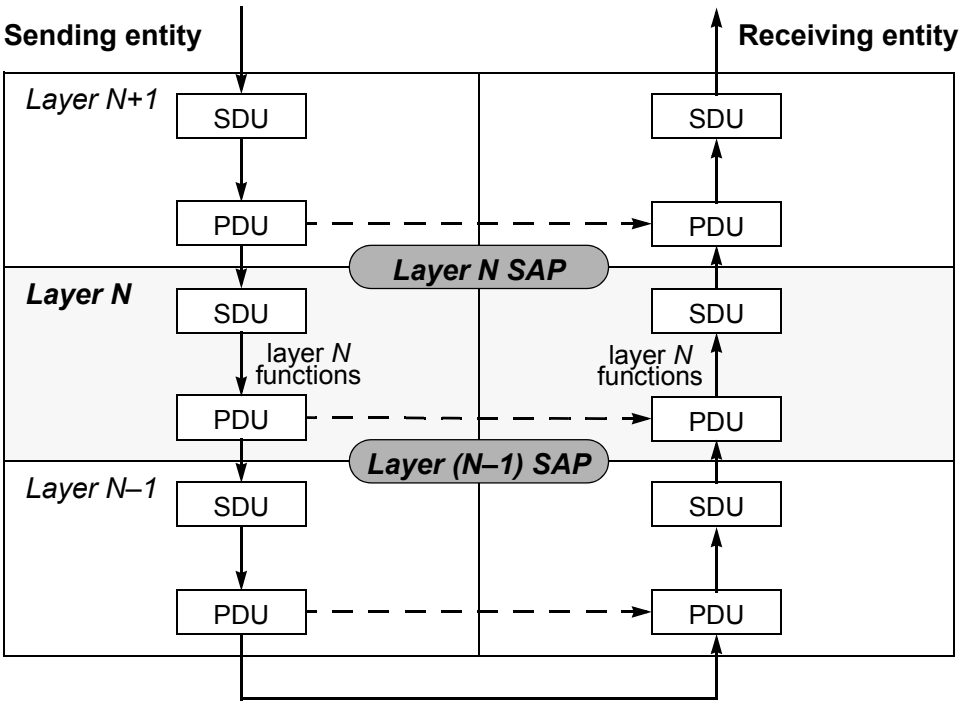

Figure 4—PDU and SDU in a protocol stack

3.65 quality of service (QoS) parameter set: A parameter set associated with a service flow identifier (SFID). The contained traffic parameters define scheduling behavior of uplink (UL) or downlink (DL) flows associated with transport connections.

NOTE—See 6.3.14.1.

3.66 radio frequency (RF) center frequency: The center of the frequency band in which a base station (BS) or subscriber station (SS) is intended to transmit.

3.67 scanning interval: A time period intended for the mobile station (MS) to monitor neighbor base stations (BSs) to determine the suitability of the BSs as targets for handover (HO).

3.68 secondary management connection: A connection that may be established during subscriber station (SS) registration that is used to transport standards-based [e.g, Simple Network Management Protocol (SNMP), Dynamic Host Configuration Protocol (DHCP)] messages.

3.69 security association (SA): The set of security information that a base station (BS) and one or more of its client subscriber stations (SSs) share in order to support secure communications. This shared information includes traffic encryption keys (TEKs) and cipher block chaining (CBC) initialization vectors (IVs).

3.70 security association identifier (SAID): An identifier shared between the base station (BS) and subscriber station (SS) that uniquely identifies a security association (SA). The SAID is unique within MS. The uniqueness of this identifier shall be guaranteed by {MS MAC Address, SAID} pair.

3.71 service access point (SAP): The point in a protocol stack where the services of a lower layer are available to its next higher layer.

3.72 service data unit (SDU): The data unit exchanged between two adjacent protocol layers. On the downward direction, it is the data unit received from the previous higher layer. On the upward direction, it is the data unit sent to the next higher layer.

NOTE—See Figure 4.

3.73 service flow (SF): A unidirectional flow of medium access control layer (MAC) service data units (SDUs) on a connection that is provided a particular quality of service (QoS).

3.74 service flow identifier (SFID): A 32-bit quantity that uniquely identifies a service flow to the subscriber station (SS).

3.75 serving base station (BS): For any mobile station (MS), the BS with which the MS has most recently completed registration at initial network-entry or during a handover (HO).

3.76 STC layer: OFDMA Space Time Coding information-flow fed to the STC encoder as an input. The number of STC layers in a system with vertical encoding is one, while in horizontal encoding, it depends on the number of encoding/modulation paths. This term may be used interchangeably with the word *layer* when used in the context of OFDMA STC.

3.77 STC stream: OFDMA Space Time Coding information path encoded by the STC encoder that is passed to subcarrier mapping and sent through one antenna, or passed on to the beamformer. The number of STC streams in both vertical and horizontal encoding systems is the same as the number of output paths of the STC encoder. This term may be used interchangeably with the word *stream* when used in the context of OFDMA STC.

3.78 subcarrier index: An index number identifying a particular used subcarrier in an orthogonal frequency division multiplexing (OFDM) or orthogonal frequency division multiple access (OFDMA) signal. Subcarrier indices are greater than or equal to zero.

3.79 subscriber station (SS): A generalized equipment set providing connectivity between subscriber equipment and a base station (BS).

3.80 subscriber station receive/transmit gap (SSRTG): The minimum receive-to-transmit turnaround gap. SSRTG is measured from the time of the last sample of the received burst to the first sample of the transmitted burst at the antenna port of the SS.

3.81 subscriber station transmit/receive gap (SSTTG): The minimum transmit-to-receive turnaround gap. SSTTG is measured from the time of the last sample of the transmitted burst to the first sample of the received burst at the antenna port of the SS.

3.82 target base station (BS): The BS with which a mobile station (MS) intends to be registered at the end of a handover (HO).

3.83 time division duplex (TDD): A duplex scheme where uplink (UL) and downlink (DL) transmissions occur at different times but may share the same frequency.

3.84 time division multiple access (TDMA) burst: A contiguous portion of the uplink (UL) or downlink (DL) using physical layer (PHY) parameters, determined by the downlink interval usage code (DIUC) or uplink interval usage code (UIUC), that remain constant for the duration of the burst. TDMA bursts are

separated by preambles and are separated by gaps in transmission if subsequent bursts are from different transmitters.

3.85 time division multiplexing (TDM) burst: A contiguous portion of a TDM data stream using physical layer (PHY) parameters, determined by the downlink interval usage code (DIUC), that remain constant for the duration of the burst. TDM bursts are not separated by gaps or preambles.

3.86 transport connection: A connection used to transport user data. It does not include any traffic over the basic, primary, or secondary management connections. A fragmentable transport connection is a connection that allows fragmentation of service data units (SDUs).

3.87 transport connection identifier (CID): A unique identifier taken from the CID address space that uniquely identifies the transport connection. All user data traffic is carried on transport connections, even for service flows that implement connectionless protocols, such as Internet Protocol (IP). An active or admitted service flow [identified by a service flow identifier (SFID)] maps to a Transport CID assigned by the base station (BS).

3.88 turbo decoding: Iterative decoding, using soft inputs and soft outputs.

3.89 type/length/value (TLV): A formatting scheme that adds a tag to each transmitted parameter containing the parameter type (and implicitly its encoding rules) and the length of the encoded parameter.

3.90 U Interface: The management and control interface that exists between the SS and the BS over the air interface.

3.91 uplink (UL): The direction from a subscriber station (SS) to the base station (BS).

3.92 uplink channel descriptor (UCD): A medium access control layer (MAC) message that describes the physical layer (PHY) characteristics of an uplink (UL).

3.93 uplink interval usage code (UIUC): An interval usage code specific to an uplink (UL).

3.94 uplink map (UL-MAP): A set of information that defines the entire access for a scheduling interval.

3.95 user data: Protocol data units (PDUs) of any protocol above a service-specific convergence sublayer (CS) received over the CS service access point (SAP).

3.96 wireless access: End-user radio connection(s) to core networks.

4. Abbreviations and acronyms

3-DES	triple data encryption standard
AAS	adaptive antenna system
ACM	account management
AES	advanced encryption standard
AGC	automatic gain control
AK	authorization key
AKID	authorization key identifier
AMC	adaptive modulation and coding
ARQ	automatic repeat request
ASA	authentication and service authorization
ASR	anchor switch reporting
ATDD	adaptive time division duplexing
ATM	asynchronous transfer mode
BCC	block convolutional code
BE	best effort
BER	bit error ratio
BPSK	binary phase shift keying
BR	bandwidth request
BS	base station
BSN	block sequence number
BTC	block turbo code
BW	bandwidth (abbreviation used only in equations, tables, and figures)
BWA	broadband wireless access
BWAA	bandwidth allocation/access
C/I	carrier-to-interference ratio
C/N	carrier-to-noise ratio
CA	certification authority
CBC	cipher block chaining
CBC-MAC	cipher block chaining message authentication code
CC	confirmation code
CCH	control subchannel
CCI	co-channel interference
CCM	CTR mode with CBC-MAC
CCS	common channel signaling
CCV	clock comparison value
CDMA	code division multiple access
ChID	channel identifier
CID	connection identifier
CINR	carrier-to-interference-and-noise ratio
CIR	channel impulse response
CLP	cell loss priority
CMAC	cipher-based message authentication code
CP	cyclic prefix
CPS	common part sublayer

CQI	channel quality information
CQICH	channel quality information channel
CRC	cyclic redundancy check
CS	convergence sublayer
CSCF	centralized scheduling configuration
CSCH	centralized scheduling
CSIT	channel state information at the transmitter
CTC	convolutional turbo code
CTR	counter mode encryption
DAMA	demand assigned multiple access
DARS	digital audio radio satellite
dBi	decibels of gain relative to the 0 dB gain of a free-space isotropic radiator
dBm	decibels relative to 1 mW
DCD	downlink channel descriptor
DES	data encryption standard
DFS	dynamic frequency selection
DHCP	Dynamic Host Configuration Protocol
DIUC	downlink interval usage code
DL	downlink
DLFP	downlink frame prefix
DSA	dynamic service addition
DSC	dynamic service change
DSCH	distributed scheduling
DSCP	differentiated services codepoint
DSD	dynamic service deletion
DSx	dynamic service addition, change, or deletion
D-TDOA	Downlink Time Difference Of Arrival
EAP	extensible authentication protocol
EC	encryption control
ECB	electronic code book
ECRTP	a IP-header-compression CS PDU format (IETF RFC 3545)
EDE	encrypt-decrypt-encrypt
EESS	earth exploratory satellite system
EIK	EAP Integrity Key
EIRP	effective isotropic radiated power
EKS	encryption key sequence
EVM	error vector magnitude
FBSS	fast base station switching
FC	fragmentation control
FCAPS	Fault Management, Configuration Management, Account Management, Performance Management, Security Management
FCH	frame control header
FDD	frequency division duplex or duplexing
FEC	forward error correction
FFSH	fast-feedback allocation subheader
FFT	fast Fourier transform

FHDC	frequency hopping diversity coding
FPC	fast power control
FSH	fragmentation subheader
FSN	fragment sequence number
FSS	fixed satellite service
FUSC	full usage of subchannels
GPCS	Generic Packet Convergence Sublayer
GF	galois field
GKEK	group key encryption key
GMSH	grant management subheader
GPS	global positioning system
GS	guard symbol
GTEK	group traffic encryption key
HCS	header check sequence
HEC	header error check
H-FDD	half-duplex frequency division duplex
HMAC	hashed message authentication code
HO	handover
HT	header type
HUMAN	high-speed unlicensed metropolitan area network
I	inphase
IANA	internet assigned numbers authority
IE	information element
IFFT	inverse fast Fourier transform
IMM	idle mode management
IP	Internet Protocol
IV	initialization vector
IWF	interworking function
KEK	key encryption key
LAN	local area network
LBS	location based services
LDPC	low-density parity check
LFSR	linear feedback shift register
LLC	logical link control
LOS	line-of-sight
LSB	least significant bit
MAC	medium access control layer
MAK	MBS authorization key
MAN	metropolitan area network
MBS	multicast and broadcast service
MCID	multicast CID (see Table 557)
MCS	modulation coding scheme
MDHO	macro diversity handover
MDS	multipoint distribution service
MGTEK	MBS group traffic encryption key
MIB	management information base

MIC	message integrity check
MIH	media independent handover
MIHF	MIH Function
MIMO	multiple input multiple output
MMDS	multichannel multipoint distribution service
MPEG	moving pictures experts group
MS	mobile station
MSB	most significant bit
MSK	master session key
NAI	network access identifier
NAS	network access server
NCFG	network configuration
NCMS	network control and management system
NCMS(BS)	network control and management system at the BS side (network side)
NCMS(SS/MS)	network control and management system at the SS/MS side
NEM	network entry management
NENT	network entry
NLOS	non-line-of-sight
NNI	network-to-network interface (or network node interface)
NRM	network reference model
nrtPS	non-real-time polling service
NSP	network service provider
OFDM	orthogonal frequency division multiplexing
OFDMA	orthogonal frequency division multiple access
OID	object identifier
PAK	primary authorization key
PAPR	peak to average power ratio
PBR	piggyback request
PDU	protocol data unit
PER	packet error ratio
PHS	payload header suppression
PHSF	Payload Header Suppression field
PHSI	payload header suppression index
PHSM	payload header suppression mask
PHSS	payload header suppression size
PHSV	payload header suppression valid
PHY	physical layer
PKM	privacy key management
PM	poll-me bit
PMD	physical medium dependent
PMK	pairwise master key
PMP	point-to-multipoint
PN	packet number
PPP	Point-to-Point Protocol
PRBS	pseudo-random binary sequence
PS	physical slot

PSC	power saving class
PSH	packing subheader
PTI	payload type indicator
PtP	point to point
PUSC	partial usage of subchannels
PUSC-ASCA	partial usage of subchannels – adjacent subcarrier allocation
PVC	permanent virtual circuit
Q	quadrature
QAM	quadrature amplitude modulation
QoS	quality of service
QPSK	quadrature phase-shift keying
REQ	request
RLAN	radio local access network
RNG	ranging
ROHC	an IP-header-compression CS PDU format (IETF RFC 3095)
RRA	radio resource agent
RRC	radio resource controller
RRM	radio resource management
RS	Reed–Solomon
RSP	response
RSS	receive signal strength
RSSI	receive signal strength indicator
RTG	receive/transmit transition gap
rtPS	real-time polling service
Rx	receive (abbreviation not used as verb)
RxDS	receiver delay spread clearing interval
SA	security association
SAID	security association identifier
SAP	service access point
SAR	synthetic aperture radar
SC	single carrier
SDMA	spatial division multiple access
SDU	service data unit
SF	service flow
SFM	service flow management
SFID	service flow identifier
SHA	secure hash algorithm
SI	slip indicator
SIQ	service information query
SM	spatial multiplexing
SN	sequence number
SNMP	Simple Network Management Protocol
SNR	signal-to-noise ratio
SS	subscriber station
SSID	subscriber station identification (MAC address)
SSM	subscriber station management

SSTG	subscriber station transition gap
STC	space time coding
STTD	space time transmit diversity
SVC	switched virtual circuit
TCS	transmission convergence sublayer
TCM	trellis coded modulation
TCP	Transmission Control Protocol
TDD	time division duplex or duplexing
TDM	time division multiplexing
TDMA	time division multiple access
TDOA	time difference of arrival
TEK	traffic encryption key
TFTP	Trivial File Transfer Protocol
TLV	type/length/value
TTG	transmit/receive transition gap
TUSC	tile usage of subchannels
Tx	transmit (abbreviation not used as verb)
UCD	uplink channel descriptor
UDP	User Datagram Protocol
UEP	unequal error protection
UGS	unsolicited grant service
UIUC	uplink interval usage code
UL	uplink
UNI	user-to-network interface (or user-network interface)
U-NII	unlicensed national information infrastructure
UTC	universal coordinated time
U-TDOA	uplink time difference of arrival
UW	unique word
VC	virtual channel
VCI	virtual channel identifier
VLAN	virtual local area network
VP	virtual path
VPI	virtual path identifier
WirelessMAN	Wireless Metropolitan Area Networks
WirelessHUMAN	Wireless High-speed Unlicensed Metropolitan Area Networks
WLAN	wireless local area network
XOR	exclusive-or

5. Service-specific CS

The service-specific CS resides on top of the MAC CPS and utilizes, via the MAC SAP, the services provided by the MAC CPS (see Figure 1). The CS performs the following functions:

— Accepting higher layer protocol data units (PDUs) from the higher layer

— Performing classification of higher layer PDUs

— Processing (if required) the higher layer PDUs based on the classification

— Delivering CS PDUs to the appropriate MAC SAP

— Receiving CS PDUs from the peer entity

Currently, three CS specifications are provided: the asynchronous transfer mode (ATM) CS, the packet CS, and the Generic Packet CS. Other CSs may be specified in the future.

5.1 ATM CS

The ATM CS is a logical interface that associates different ATM services with the MAC CPS SAP. The ATM CS accepts ATM cells from the ATM layer, performs *classification* and, if provisioned, *PHS*, and delivers CS PDUs to the appropriate MAC SAP.

5.1.1 CS service definition

The ATM CS is specifically defined to support the convergence of PDUs generated by the ATM layer protocol of an ATM network. Since ATM cell streams are generated according to the ATM standards, no ATM CS service primitive is required.

5.1.2 Data/Control plane

5.1.2.1 PDU formats

The ATM CS PDU shall consist of an ATM CS PDU header, defined in Table 2, and the ATM CS PDU payload. The ATM CS PDU payload shall be equal to the ATM cell payload. The ATM CS PDU is illustrated in Figure 5.

Table 2—ATM CS PDU header

Syntax	Size	Notes
ATM_CS_PDU_Header (){		
if (no PHS) {		
ATM_Header	40 bits	The full ATM cell header
}		
else if (VP-switched) {		
PTI	3 bits	From the ATM cell header
CLP	1 bit	From the ATM cell header
reserved	4 bits	Shall be set to zero
VCI	16 bits	From the ATM cell header
}		
else (VC-switched) {		
PTI	3 bits	From the ATM cell header
CLP	1 bit	From the ATM cell header
Reserved	4 bits	Shall be set to zero
}		
}		

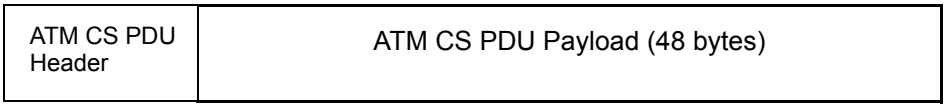

Figure 5—ATM CS PDU format

5.1.2.2 Classification

An ATM connection, which is uniquely identified by a pair of values of virtual path identifier (VPI) and virtual channel identifier (VCI), is either virtual path (VP) switched or virtual channel (VC) switched. In VP-switched mode, all VCIs within one single incoming VPI are automatically mapped to that of an outgoing VPI. In VC-switched mode, input VPI/VCI values are individually mapped to output VPI/VCI values. Thus, when performing PHS, the ATM CS differentiates these two types of connections and performs the suppression accordingly.

A classification rule is a set of matching criteria applied to each ATM cell entering the ATM CS. It consists of some ATM cell matching criteria, such as VPI and VCI, and a reference to a CID. If an ATM cell matches the specified matching criteria, it is delivered to the MAC SAP for delivery on the connection identified by the CID.

5.1.2.2.1 VP-switched mode

For VP-switched mode, the VPI field, 12 bits for a network-to-network interface (NNI) or 8 bits for a user-to-network interface (UNI), is mapped to the 16-bit CID for the MAC connection on which it is transported. Since the QoS and category of service parameters for the connection are set at connection establishment, this mapping of VPI to CID guarantees the correct handling of the traffic by the MAC.

5.1.2.2.2 VC-switched mode

For VC-switched mode, the VPI and VCI fields, 28 bits total for an NNI or 24 bits total for a UNI, are mapped to the 16-bit CID for the MAC connection on which it is transported. Since the QoS and category of service parameters for the connection are set at connection establishment, this mapping of VPI and VCI to CID guarantees the correct handling of the traffic by the MAC. Note that the full range of VPI/VCI combinations (up to 2^{28} for NNI and 2^{24} for UNI) cannot be simultaneously supported in this mode.

5.1.2.3 PHS

In PHS, a repetitive portion of the payload headers of the CS SDUs is suppressed by the sending entity and restored by the receiving entity. On the downlink (DL), the sending entity is the ATM CS on the BS and the receiving entity is the ATM CS on the SS. On the uplink (UL), the sending entity is the ATM CS on the SS, and the receiving entity is the ATM CS on the BS. To further save bandwidth, multiple ATM cells (with or without PHS) that share the same CID may be packed and carried by a single MAC CPS PDU. Note that when PHS is turned off, no part of any ATM cell header including HEC (header error check) field shall be suppressed. This provides an option for protecting the integrity of the cell header. Whether PHS is applied to an ATM connection is signaled in the dynamic service addition (DSA) request (DSA-REQ) message at the connection's creation. Similarly, the VPI (for VP-switched connections) or the VPI/VCI (for VC-switched connections) is also signaled in the classification rule settings of the DSA-REQ message at connection creation.

5.1.2.3.1 PHS for VP-switched ATM connections

In VP-switched mode, the VPI is mapped to a CID. This allows the disposal of the remainder of the ATM cell header except for the VCI, PTI (payload type indicator), and CLP (cell loss priority) fields. These fields shall be encapsulated in the CS PDU header.

Figure 6 shows a CS PDU containing a single VP-switched ATM cell with the cell header suppressed and the format of the ATM CS PDU header for VP-switched ATM connections.

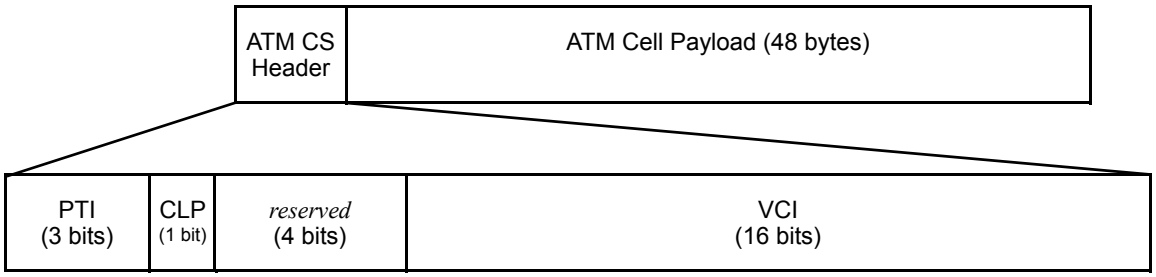

Figure 6—CS PDU format for VP-switched ATM connections

5.1.2.3.2 PHS for VC-switched ATM connections

In VC-switched mode, the VPI/VCI combination is mapped to a CID. This allows the disposal of the remainder of the ATM cell header except for the PTI and CLP fields. These fields shall be encapsulated in the CS PDU header.

Figure 7 shows a CS PDU containing a single VC-switched ATM cell with the cell header suppressed and the format of the ATM CS PDU header for VC-switched ATM connections.

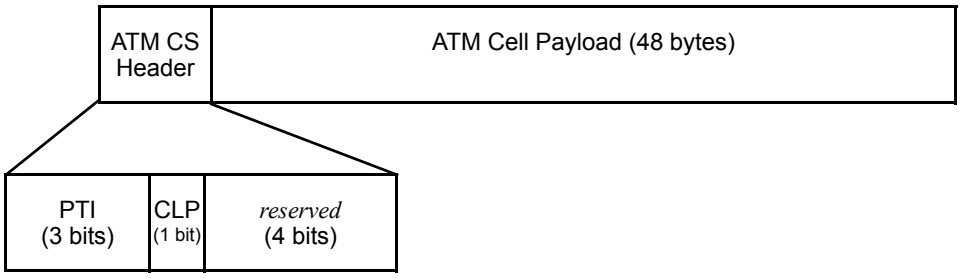

Figure 7—CS PDU format for VC-switched ATM connections

5.1.2.4 Signaling procedure

ATM interfaces support three types of connections, switched virtual circuit (SVC), permanent virtual circuit (PVC), and soft PVC. SVCs are established and terminated dynamically on demand by the use of signaling. The word "permanent" signifies that the circuit is established administratively. Although both PVC and soft PVC are established administratively, PVCs are established by provisioning process, and soft PVCs are established by the use of signaling.

ATM networks use common channel signaling (CCS), where signaling messages are carried over a connection completely independent of user connections and where one signaling channel can carry signaling messages for a number of user connections. With nonassociated signaling (ATM as-sig-0061.000), by default, the signaling channel on VPI = 0 controls all VPs on the same physical interface. In other words, except when the optional proxy signaling capability (Annex 2 of ATM as-sig-0061.000) or when the optional Virtual UNI capability (Annex 8 of ATM as-sig-0061.000) is used, the signaling channel is identified by VPI = 0 and VCI = 5. Note that this specification does not support associated signaling (ATM af-uni-0010.002), where VCI = 5 of each VP is used as the signaling channel for all VCs on the same VP. In addition, this specification does not support either proxy signaling or virtual UNI.

To establish an SVC, it is the responsibility of the calling party to initiate the signaling procedure by issuing the appropriate signaling messages. Either end can establish or release the SVC. Details on how to use these signaling messages are available in ATM as-sig-0061.000. It shall be the responsibility of the implementation of the BS to map ATM signaling messages to corresponding MAC CPS service primitives.

To establish a soft PVC, the network management system provisions one end of the soft PVC with the address identifying the egress ATM interface of the ATM network. The calling end has the responsibility for establishing and releasing the connection. It is also the responsibility of the calling party (if necessary) to reestablish the connection in case of switching system or link failure. It shall be the responsibility of the implementation of the BS to map ATM signaling messages to corresponding MAC CPS service primitives.

On the DL direction, the signaling starts at an "end user" of the ATM backhaul network that implements an ATM UNI and terminates at the BS that shall implement either an ATM UNI or an ATM NNI. The signaling may be mapped by an interworking function (IWF) and extended to some user network on the SS-side. On

the UL direction, the signaling starts at the ATM interface of the BS and ends at the ATM UNI of an "end user." In addition, the signaling may be originated by an "end user" of some user network and mapped by the IWF. Note that mapping of data units carried by the air link shall be limited to only cell-level convergence (5.1.2.2). If required by a user network, other levels of mappings (e.g., the convergence of, say, an Ethernet packet to ATM cells) shall be handled by the user network's IWF exclusively.

During the provisioning process, each SS joining the IEEE 802.16 system shall request a dedicated CID as the signaling connection corresponding to the CCS connection used by ATM networks. Any CID provisioned for this purpose shall not be dynamically changed or terminated. Each IEEE 802.16 system shall provision a set of CIDs for this purpose.

5.2 Packet CS

The packet CS resides on top of the IEEE 802.16 MAC CPS. The CS performs the following functions, utilizing the services of the MAC:

a) Classification of the higher layer protocol PDU into the appropriate transport connection
b) Suppression of payload header information (optional)
c) Delivery of the resulting CS PDU to the MAC SAP associated with the service flow for transport to the peer MAC SAP
d) Receipt of the CS PDU from the peer MAC SAP
e) Rebuilding of any suppressed payload header information (optional)

The sending CS is responsible for delivering the MAC service data unit (MAC SDU) to the MAC SAP. The MAC is responsible for delivery of the MAC SDU to peer MAC SAP in accordance with the QoS, fragmentation, concatenation, and other transport functions associated with a particular connection's service flow characteristics. The receiving CS is responsible for accepting the MAC SDU from the peer MAC SAP and delivering it to a higher layer entity.

The packet CS is used for transport for all packet-based protocols as defined in 11.13.18.3.

5.2.1 MAC SDU format

Once classified and associated with a specific MAC connection, higher layer PDUs shall be encapsulated in the MAC SDU format as illustrated in Figure 8. The 8-bit PHSI (payload header suppression index) field shall be present when a PHS rule has been defined for the associated connection.

PHS is described in 5.2.3.

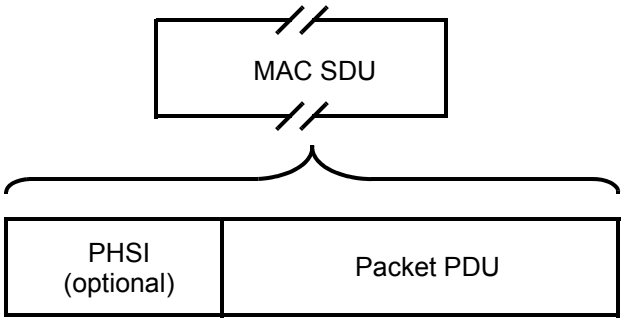

Figure 8—MAC SDU format

5.2.2 Classification

Classification is the process by which a MAC SDU is mapped onto a particular transport connection for transmission between MAC peers. The mapping process associates a MAC SDU with a transport connection, which also creates an association with the service flow characteristics of that connection. This process facilitates the delivery of MAC SDUs with the appropriate QoS constraints.

A classification rule is a set of matching criteria applied to each packet entering the IEEE 802.16 network. It consists of some protocol-specific packet matching criteria (destination IP address, for example), a classification rule priority, and a reference to a CID. If a packet matches the specified packet matching criteria, it is then delivered to the SAP for delivery on the connection defined by the CID. Implementation of each specific classification capability (as, for example, IPv4 based classification) is optional. The service flow characteristics of the connection provide the QoS for that packet.

Several classification rules may each refer to the same service flow. The classification rule priority is used for ordering the application of classification rules to packets. Explicit ordering is necessary because the patterns used by classification rules may overlap. The priority need not be unique, but care shall be taken within a classification rule priority to prevent ambiguity in classification. DL classification rules are applied by the BS to packets it is transmitting and UL classification rules are applied at the SS. Figure 9 and Figure 10 illustrate the mappings discussed in the previous paragraph.

It is possible for a packet to fail to match the set of defined classification rules. In this case, the CS shall discard the packet.

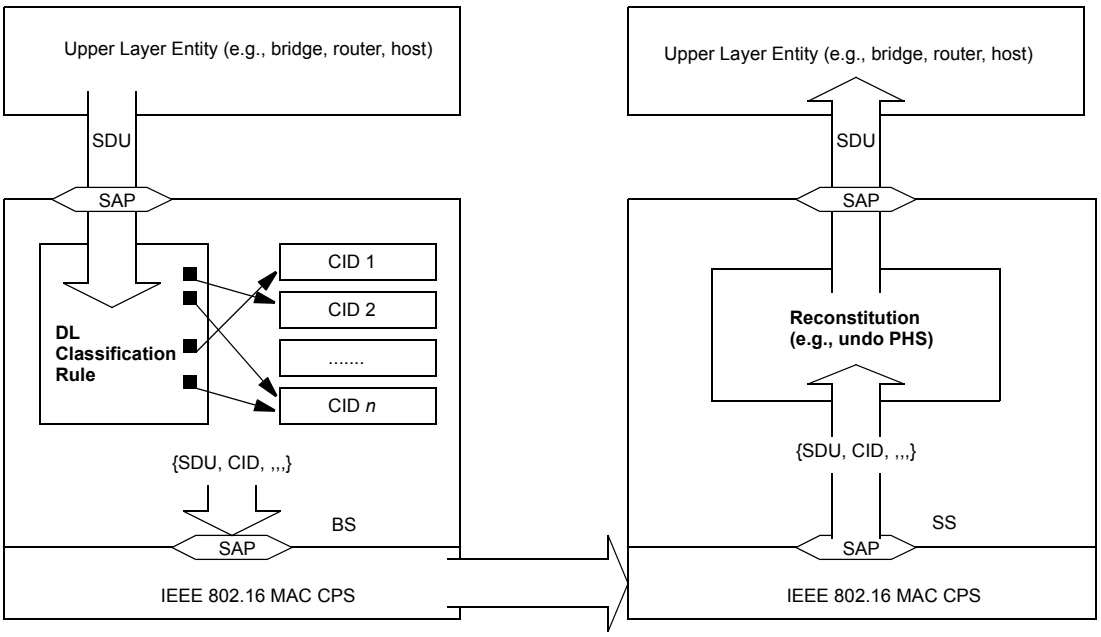

Figure 9—Classification and CID mapping (BS to SS)

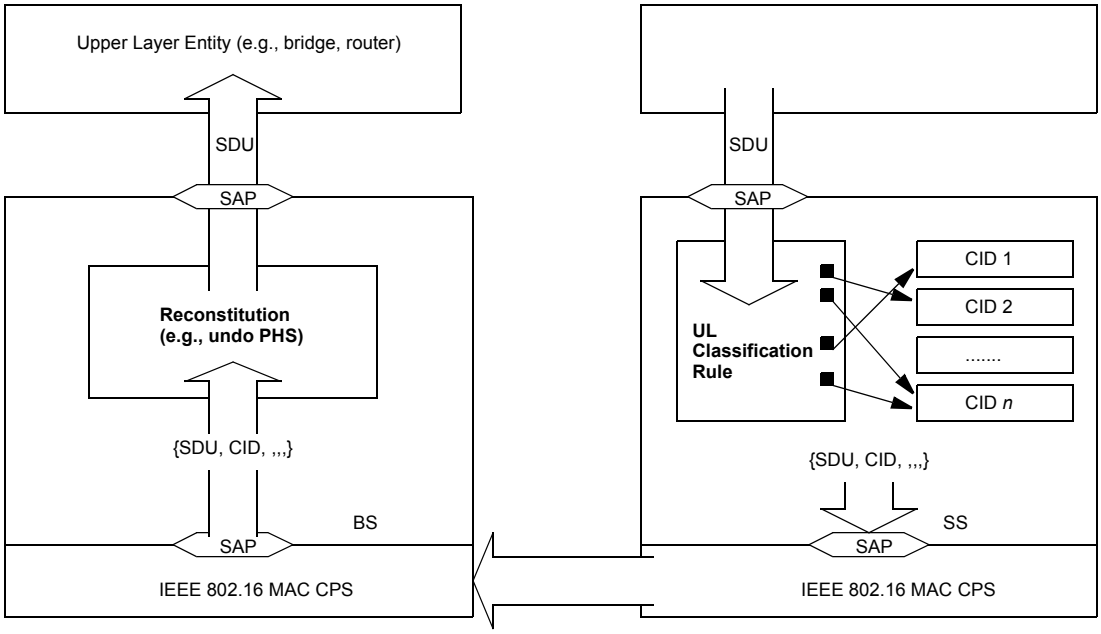

Figure 10—Classification and CID mapping (SS to BS)

5.2.3 Payload header suppression (PHS)

In PHS, a repetitive portion of the payload headers of the higher layer is suppressed in the MAC SDU by the sending entity and restored by the receiving entity. Implementation of PHS capability is optional. On the UL, the sending entity is the SS and the receiving entity is the BS. On the DL, the sending entity is the BS and the receiving entity is the SS. If PHS is enabled at MAC connection, each MAC SDU is prefixed with a PHSI, which references the Payload Header Suppression field (PHSF).

The sending entity uses classification rules to map packets into a service flow. The classification rule uniquely maps packets to its associated PHS Rule. The receiving entity uses the CID and the PHSI to restore the PHSF. Once a PHSF has been assigned to a PHSI, it shall not be changed. To change the value of a PHSF on a service flow, a new PHS rule shall be defined, the old rule is removed from the service flow, and the new rule is added. When all classification rules associated with the PHS rule are deleted, then the PHS rule shall also be deleted.

PHS has a payload header suppression valid (PHSV) option to verify or not verify the payload header before suppressing it. PHS has also a payload header suppression mask (PHSM) option to allow select bytes not to be suppressed. The PHSM facilitates suppression of header fields that remain static within a higher layer session (e.g., IP addresses), while enabling transmission of fields that change from packet to packet (e.g., IP Total Length).

The BS shall assign all PHSI values just as it assigns all CID values. Either the sending or the receiving entity shall specify the PHSF and the payload header suppression size (PHSS). This provision allows for preconfigured headers or for higher level signaling protocols outside the scope of this standard to establish cache entries.

It is the responsibility of the higher layer service entity to generate a PHS Rule that uniquely identifies the suppressed header within the service flow. It is also the responsibility of the higher layer service entity to

guarantee that the byte strings that are being suppressed are constant from packet to packet for the duration of the active service flow.

5.2.3.1 PHS operation

SS and BS implementations are free to implement PHS in any manner as long as the protocol specified in this subclause is followed. Figure 11 illustrates the following procedure.

A packet is submitted to the packet CS. The SS applies its list of classification rules. A match of the rule shall result in an UL service flow and CID and may result in a PHS Rule. The PHS Rule provides PHSF, PHSI, PHSM, PHSS, and PHSV. If PHSV is set or not present, the SS shall compare the bytes in the packet header with the bytes in the PHSF that are to be suppressed as indicated by the PHSM. If they match, the SS shall suppress all the bytes in the UL PHSF except the bytes masked by PHSM. The SS shall then prefix the PDU with the PHSI and present the entire MAC SDU to the MAC SAP for transport on the UL.

When the MAC protocol data unit (MAC PDU) is received by the BS from the air interface, the BS MAC shall determine the associated CID by examination of the generic MAC header. The BS MAC sends the PDU to the MAC SAP associated with that CID. The receiving packet CS uses the CID and the PHSI to look up PHSF, PHSM, and PHSS. The BS reassembles the packet and then proceeds with normal packet processing. The reassembled packet contains bytes from the PHSF. If verification was enabled, then the PHSF bytes equal the original header bytes. If verification was not enabled, then there is no guarantee that the PHSF bytes match the original header bytes.

A similar operation occurs on the DL. The BS applies its list of Classifiers classification rules. A match of the classification shall result in a DL service flow and a PHS rule. The PHS rule provides PHSF, PHSI, PHSM, PHSS, and PHSV. If PHSV is set or not present, the BS shall verify the Downlink Suppression field in the packet with the PHSF. If they match, the BS shall suppress all the bytes in the Downlink Suppression field except the bytes masked by PHSM. The BS shall then prefix the PDU with the PHSI and present the entire MAC SDU to the MAC SAP for transport on the DL.

The SS shall receive the packet based upon the CID Address filtering within the MAC. The SS receives the PDU and then sends it to the CS. The CS then uses the PHSI and CID to lookup PHSF, PHSM, and PHSS. The SS reassembles the packet and then proceeds with normal packet processing.

Figure 12 demonstrates packet suppression and restoration when using PHS masking. Masking allows only bytes that do not change to be suppressed. Note that the PHSF and PHSS span the entire suppression field, included suppressed and unsuppressed bytes.

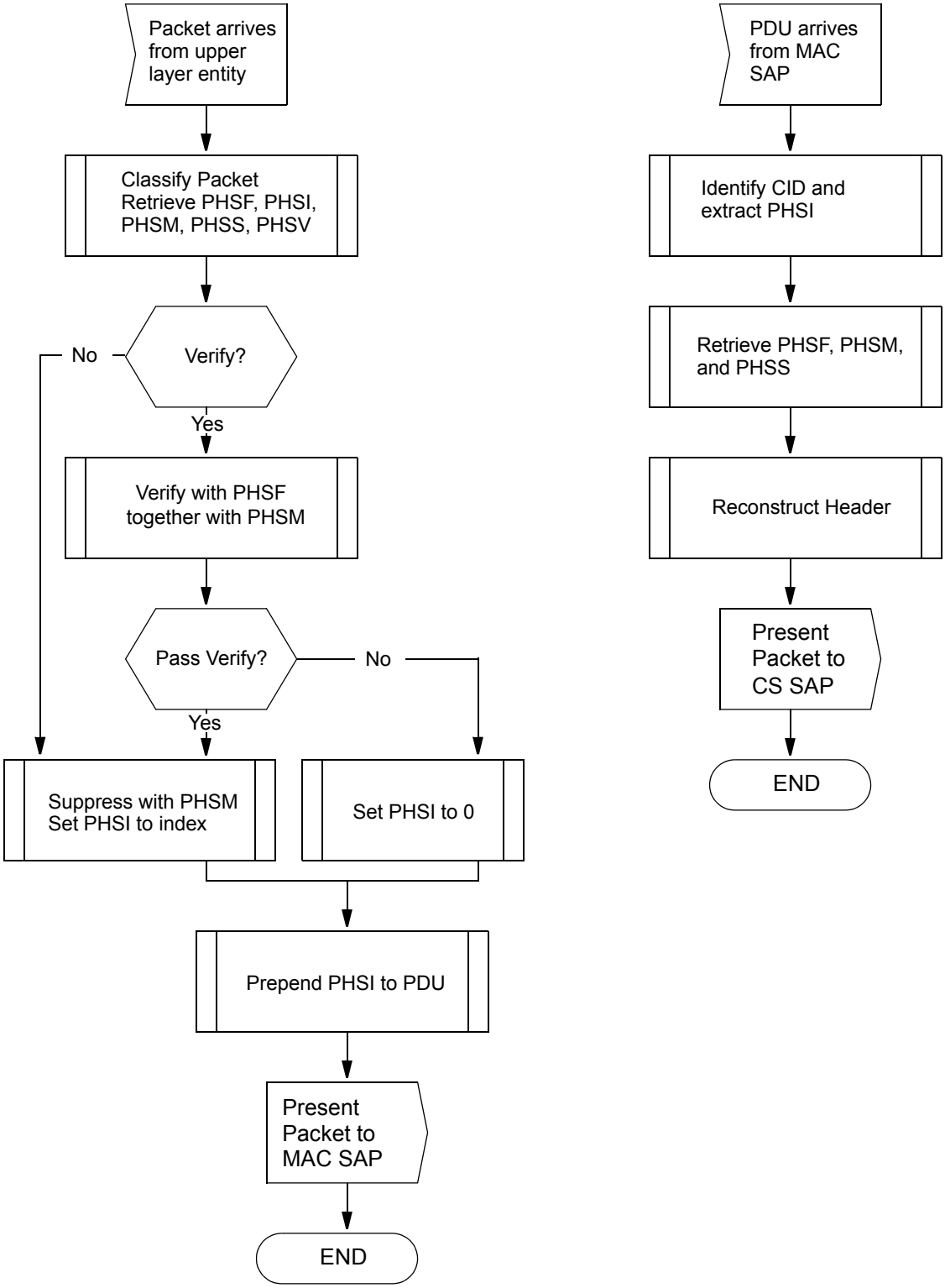

Figure 11—PHS operation

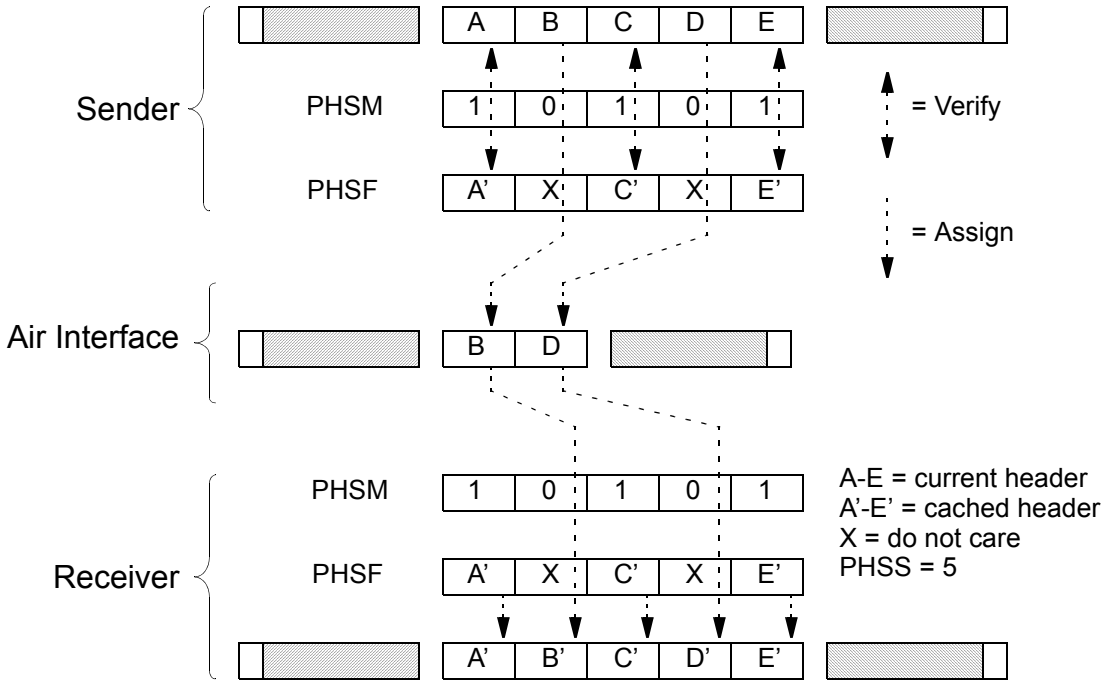

Figure 12—PHS with masking

5.2.3.2 PHS signaling

PHS requires the creation of the following three objects:

a) Service flow
b) Classification rule
c) PHS rule

These three objects may be created either simultaneously or in separate message flows.

PHS rules are created with DSA or dynamic service change (DSC) messages. The BS shall define the PHSI when the PHS Rule is created. PHS rules are deleted with the DSC or dynamic service deletion (DSD) messages. The SS or BS may define the PHSS and PHSF. To change the value of a PHSF on a service flow, a new PHS rule shall be defined, the old rule is removed from the service flow, and the new rule is added.

Figure 13 shows the two ways to signal the creation of a PHS rule.

It is possible to partially specify a PHS rule (in particular the size of the rule) at the time a service flow is created. As an example, it is likely that when a service flow is first provisioned, the header fields to be suppressed will be known. The values of some of the fields [for example: IP addresses, User Datagram Protocol (UDP) port numbers, etc.] may be unknown and would be provided in a subsequent DSC as part of the activation of the service flow (using the "Set PHS Rule" DSC Action). If the PHS rule is being defined in more than one step, each step, whether it is a DSA or DSC message, shall contain both the SFID (or reference) and a PHS index to uniquely identify the PHS rule that is being defined.

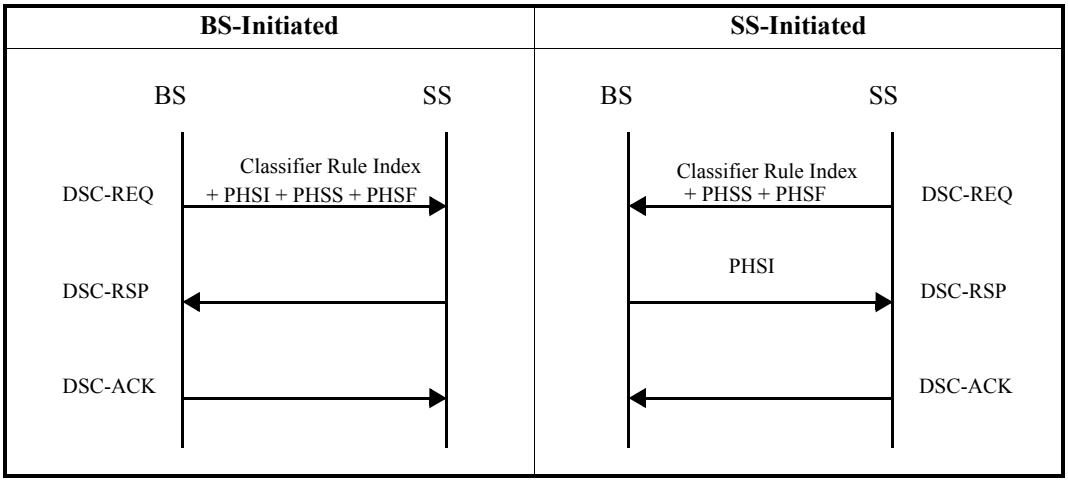

Figure 13—PHS signaling example

5.2.4 IEEE 802.3/Ethernet-specific part

5.2.4.1 IEEE 802.3/Ethernet CS PDU format

The IEEE 802.3/Ethernet PDUs are mapped to MAC SDUs according to Figure 14 (when header suppression is enabled at the connection, but not applied to the CS PDU) or Figure 15 (with header suppression). In the case where PHS is not enabled, PHSI field shall be omitted.

The IEEE 802.3/Ethernet PDU shall not include the Ethernet FCS when transmitted over this CS.

PHSI = 0	IEEE 802.3/Ethernet PDU

Figure 14—IEEE 802.3/Ethernet CS PDU format without header suppression

PHSI ≠ 0	Header-Suppressed IEEE 802.3/Ethernet PDU

Figure 15—IEEE 802.3/Ethernet CS PDU format with header suppression

ROHC (refer to IETF RFC 3095) may be used in addition to PHS to compress the IP header portion of an IP packet over Ethernet frame. The MS and the BS shall set bit 7 of Request/Transmission Policy (see 11.13.11) to 0 to enable ROHC. When ROHC is enabled for a service flow, the service flow constitutes what in RFC 3095 is referred to as a ROHC channel. Two service flows cannot share a ROHC channel, and two ROHC channels cannot share the same service flow. On a service flow for which ROHC has been enabled, all of the IP packet parts of IP over Ethernet frames shall pass through the ROHC compressor on the sender side and the decompressor on the receiver side.

ROHC compression and decompression operation shall be performed in accordance with RFC 3095, RFC 3759, RFC 3243, RFC 4995, RFC 3843, RFC 4996. To enable ROHC, the following two steps are required:

1) Capability negotiation during REG-REQ/RSP message exchange to determine whether ROHC is supported.

2) Indication in DSA-REQ/RSP messages to enable ROHC for the service flow.

5.2.4.2 IEEE 802.3/Ethernet CS classification rules

The following parameters are relevant for IEEE 802.3/Ethernet CS classification rules:

— IEEE 802.3/Ethernet header classification parameters—zero or more of the IEEE 802.3/Ethernet, VLAN and IP headers may be included in the classification. In this case, only the IEEE 802.3/IEEE 802.1Q/IP (11.13.18.3.3.2 through 11.13.18.3.3.12 and 11.13.18.3.3.16) classification parameters are allowed.
— For IP over IEEE 802.3/Ethernet, Ethernet, and VLAN, IP headers may be included in classification. In this case, only the IP, IEEE 802.3 and IEEE 802.1Q (11.13.18.3.3.2 through 11.13.18.3.3.12 and 11.13.18.3.3.16) classification parameters are allowed.
— For IP-header compressed IP over IEEE 802.3/Ethernet, Ethernet and VLAN headers may be included in the classification. In this case, only the IEEE 802.3/IEEE 802.1Q (11.13.18.3.3.8 through 11.13.18.3.3.12) classification parameters are allowed.

5.2.5 IP specific part

This subclause applies when IP (IETF RFC 791 and IETF RFC 2460) is carried over the IEEE 802.16 network.

5.2.5.1 IP CS PDU format

The format of the IP CS PDU shall be as shown in Figure 16 (when header suppression is enabled at the connection, but not applied to the CS PDU) or Figure 17 (with header suppression). In the case where PHS is not enabled, the PHSI field shall be omitted.

PHSI = 0	IP Packet (including header)

Figure 16—IP CS PDU format without header suppression

PHSI ≠ 0	Header-Suppressed IP Packet

Figure 17—IP CS PDU format with header suppression

ROHC (refer to RFC 3095) may be used instead of PHS to compress IP headers. The MS and the BS signal enabling of ROHC by setting bit 7 of Request/Transmission Policy (see 11.13.12) to 0. When ROHC is enabled for a service flow, the service flow constitutes what in RFC 3095 is referred to as a ROHC channel.

Two service flows cannot share a ROHC channel, and two ROHC channels cannot share the same service flow. All IP packets that are classified onto a service flow for which ROHC has been enabled shall pass through the ROHC compressor on the sender side, and the decompressor on the receiver side.

ROHC compression and decompression operation shall be performed in accordance with RFC 3095, RFC 3759, RFC 3243, RFC 4995, RFC 3843, RFC 4996. To enable ROHC, the following two steps are required:

1) Capability negotiation during REG-REQ/RSP message exchange to determine whether ROHC is supported.
2) Indication in DSA-REQ/RSP messages to enable ROHC for the service flow.

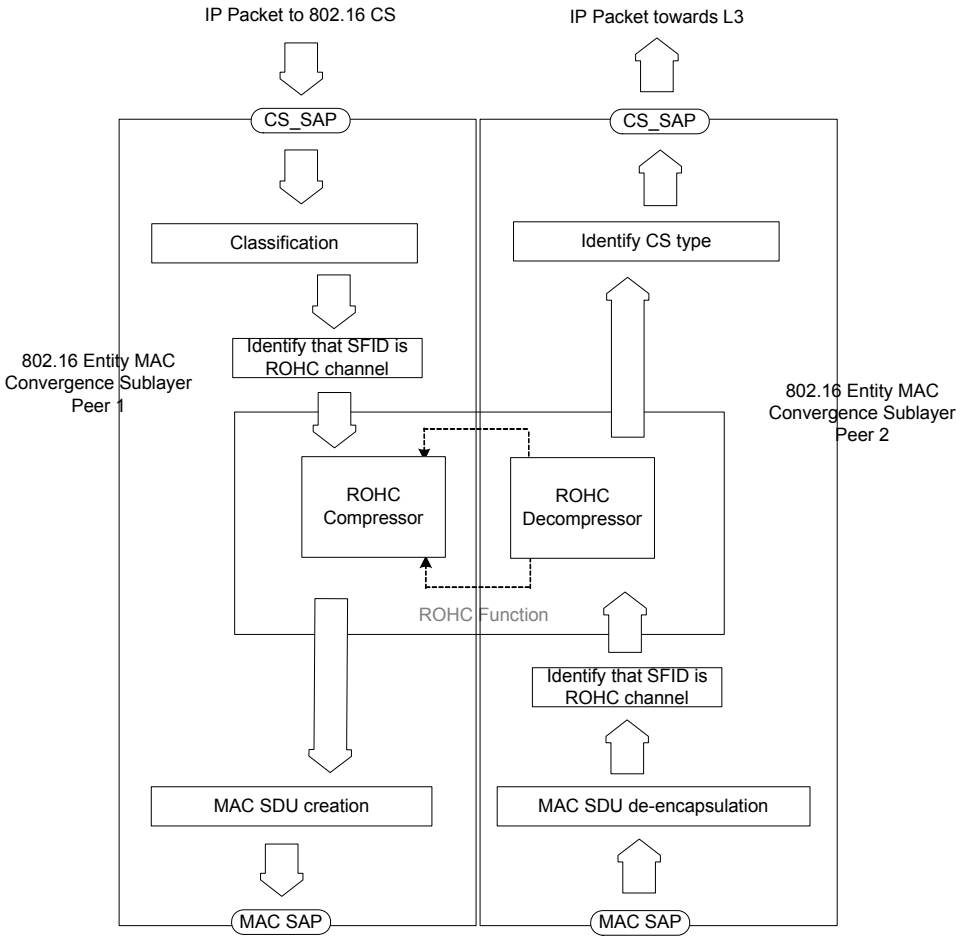

Figure 18—ROHC Function

5.2.5.2 IP classification rules

IP classification rules operate on the fields of the IP header and the transport protocol. The parameters (11.13.18.3.3.2 through 11.13.18.3.3.7 and 11.13.18.3.3.16) may be used in IP classification rules.

5.3 Generic Packet Convergence Sublayer (GPCS)

The Generic Packet CS (GPCS) is an upper layer protocol-independent packet convergence sublayer that supports multiple protocols over an IEEE 802.16 air interface. It is defined as follows:

— GPCS provides a generic packet convergence layer. This layer uses the MAC SAP and exposes a SAP to GPCS applications.

— GPCS does not re-define or replace other convergence sublayers. Instead, it provides a SAP that is not protocol specific.

— With GPCS, packet parsing happens "above" GPCS. The results of packet parsing are classification parameters given to the GPCS SAP for "parameterized classification," but upper layer packet parsing is left to the GPCS application.

— With GPCS, the upper layer protocol that is immediately above the IEEE 802.16 GPCS is identified by a TLV parameter, GPCS protocol type, as defined in 11.13.19.5.1. The GPCS protocol type shall be included in C-SFM primitives and DSx messages during connection establishment.

— GPCS defines a set of SAP parameters as the result of upper layer packet parsing. These are passed from upper layer to the GPCS in addition to the data packet. The SAP parameters include SFID, MS MAC Address, data, and length. Each is defined in 5.3.3.

— GPCS allows multiplexing of multiple layer protocol types (e.g., IPv4, IPv6, Ethernet) over the same IEEE 802.16 connection. An appropriate upper protocol layer that supports protocol multiplexing is used to do this, and it is signaled in the GPCS_PROTOCOL_TYPE TLV in DSx messages to indicate that multiple protocols are supported for a connection/service flow. It is outside the scope of the GPCS to specify how the upper layer multiplexes and demultiplexes multiple protocol data packets over an IEEE 802.16 connection/service flow.

— For interoperability, upper layer protocol type may need an interface specification. Such a standard specification is out of scope of this document.

— With GPCS, the IEEE 802.1D bridging will be supported transparently by the IEEE 802.16 air interface, because the GPCS requires the upper layer to provide the MS MAC Address and SFID with every packet, where the MS MAC Address and SFID can represent a port and a port is either a unicast port or broadcast port.

— PHS as defined in 5.2.3 defines rules for how packets with suppressed fields are reconstructed based on the PHSI and the associated PHS rule. This reconstruction method can also be applied on packets transferred over the GPCS. Details are given in 5.3.6.

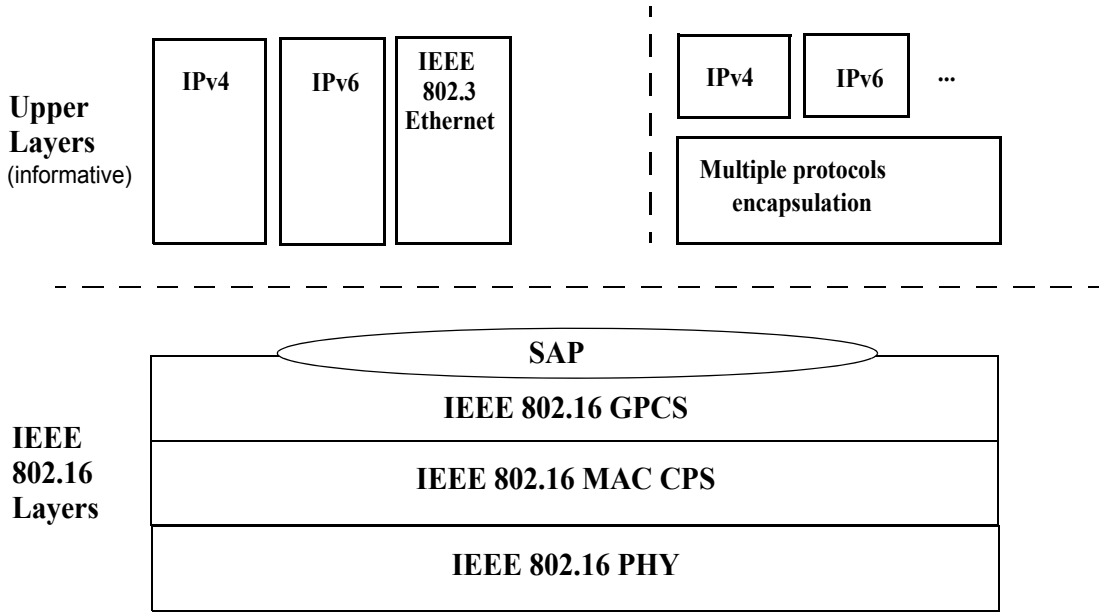

Protocol structure with the Generic Packet Convergence Sublayer (GPCS)

Figure 19—GPCS Layering Model

5.3.1 Mapping of the GPCS service to upper layers

In the case where a GPCS instance services only a single GPCS peer on an SS, the MS MAC Address field of the GPCS_DATA primitive shall be constant and set to the MAC address of the SS. The SFID field of the GPCS_DATA primitive shall be set to the SFID of the service flow being carried.

In the case where a GPCS instance services more than one SS, the MS MAC Address field of the GPCS_DATA primitive will indicate the SS that is the source or destination for the PDU. The SFID field of the GPCS_DATA primitive shall be set to the SFID of the service flow being carried.

5.3.2 Operation of GPCS with SSs that do not support the GPCS

A BS that supports GPCS may interoperate with an SS that does not support GPCS. It can be observed that a GPCS service with GPCS_PROTOCOL_TYPE 0x0000 (Ethernet MAC Service) carries packets formatted identically to the packets used in the IEEE 802.3 specific part of the Packet CS. Also, a GPCS service with GPCS_PROTOCOL_TYPE 0x0003 (Raw IP) carries packets formatted identically to the packets used in the IP specific part of the Packet CS.

A BS may operate using GPCS at the base station, locally using GPCS_PROTOCOL_TYPE=0x0000, while signaling to the SS during connection setup that the IEEE 802.3 specific part of the packet CS is being used.

A BS may operate using GPCS at the base station, locally using GPCS_PROTOCOL_TYPE=0x0003, while signaling to the SS during connection setup that the IP specific part of the packet CS is being used.

5.3.3 GPCS SAP parameters

The GPCS uses the GPCS SAP, an instance of the logical CS SAP. The GPCS SAP parameters enable the upper layer protocols to generically pass information to the GPCS so that the GPCS does not need to interpret upper layer protocol headers in order to map the upper layer data packets into proper IEEE 802.16 MAC connections. Since the SAP parameters are explicit, the parsing portion of the classification process is the responsibility of the upper layer. The parameters are relevant for SAP data path primitives, GPCS_DATA.request and GPCS_DATA.indication as described in 5.3.4 and 5.3.5, respectively.

Service flow ID (SFID)
Unique identifier to identify a unidirectional service flow for an MS. A GPCS implementation shall map the combination of SFID and MS MAC Address directly to a MAC connection ID. During connection / service flow establishment, the 802.16 control plane function shall provide GPCS the mapping information.

MS MAC Address:
48-bit unique identifier used by MS.

DATA:
The payload delivered by the GPCS upper layer to the GPCS, or by the GPCS to the upper layer.

LENGTH:
Number of bytes in DATA.

5.3.4 GPCS_DATA.request

5.3.4.1 Function

This primitive defines the transfer of data from the upper layer to the GPCS.

5.3.4.2 Semantics of the service primitive

The parameters of the primitive are as follows:

GPCS_DATA.request
(
    SFID,
    MS MAC Address,
    length,
    data
)

The parameters SFID, MS MAC Address, length, and data are described in 5.3.3.

5.3.4.3 When generated

This primitive is generated by an upper layer protocol when a GPCS SDU is to be transferred to a peer entity or entities.

5.3.4.4 Effect of receipt

The receipt of this primitive causes GPCS to map the SFID and MS MAC Address to a unidirectional service flow, and thereby a connection. GPCS invokes MAC functions, for example the MAC SAP (an example MAC SAP definition is provided in Annex C) to effect transfer of the SDU to the MAC layer.

5.3.5 GPCS_DATA.indication

5.3.5.1 Function

This primitive defines the transfer of data from the GPCS to an upper layer protocol.

5.3.5.2 Semantics of the service primitive

The parameters of the primitive are as follows:

```
GPCS_DATA.indication
(
    SFID,
    MS MAC Address,
    length,
    data
)
```

The parameters SFID, MS MAC Address, length, and data are described in 5.3.3.

Note that SFID and MS MAC Address are not transferred over the IEEE 802.16 air interface. The GPCS shall map the CID to SFID and MS MAC Address, and then pass them to the upper layer of the GPCS through GPCS_DATA.indication, where the CID is provided in MAC SAP.

5.3.5.3 When generated

This primitive is generated by GPCS whenever a GPCS SDU is to be delivered to an upper layer protocol resulting from receipt of a MAC PDU.

5.3.5.4 Effect of receipt

The effect of receipt of this primitive by the upper layer protocol entity is dependent on the validity and content of the SDU.

5.3.6 PHS operation

PHS header suppression and reconstruction according to 5.2.3 may be deployed on particular GPCS service flows by installing PHS rules at the receiving side of the service flow using the procedures described in 5.2.3.2.

6. MAC common part sublayer

6.1 Point-to-multipoint (PMP) operation overview

The DL, from the BS to the user, operates on a PMP basis. The IEEE 802.16 wireless link operates with a central BS and a sectorized antenna that is capable of handling multiple independent sectors simultaneously. Within a given frequency channel and antenna sector, all stations receive the same transmission, or parts thereof. The BS is the only transmitter operating in this direction, so it transmits without having to coordinate with other stations, except for the overall time division duplexing (TDD) that may divide time into UL and DL transmission periods. The DL is generally broadcast. In cases where the DL-MAP does not explicitly indicate that a portion of the DL subframe is for a specific SS, all SSs capable of listening to that portion of the DL subframe shall listen. The SSs check the CIDs in the received PDUs and retain only those PDUs addressed to them.

SSs share the UL to the BS on a demand basis. Depending on the class of service utilized, the SS may be issued continuing rights to transmit, or the right to transmit may be granted by the BS after receipt of a request from the user.

In addition to individually addressed messages, messages may also be sent on multicast connections (control messages and video distribution are examples of multicast applications) as well as broadcast to all stations.

Within each sector, users adhere to a transmission protocol that controls contention between users and enables the service to be tailored to the delay and bandwidth requirements of each user application. This is accomplished through four different types of UL scheduling mechanisms. These are implemented using unsolicited bandwidth grants, polling, and contention procedures. Mechanisms are defined in the protocol to allow vendors to optimize system performance by using different combinations of these bandwidth allocation techniques while maintaining consistent interoperability definitions. For example, contention may be used to avoid individual polling of SSs that have been inactive for a long period of time.

The use of polling simplifies the access operation and guarantees that applications receive service on a deterministic basis if it is required. In general, data applications are delay tolerant, but real-time applications like voice and video require service on a more uniform basis and sometimes on a very tightly-controlled schedule.

The MAC is connection-oriented. For the purposes of mapping to services on SSs and associating varying levels of QoS, all data communications are in the context of a transport connection. Service flows may be provisioned when an SS is installed in the system. Shortly after SS registration, transport connections are associated with these service flows (one connection per service flow) to provide a reference against which to request bandwidth. Additionally, new transport connections may be established when a customer's service needs change. A transport connection defines both the mapping between peer convergence processes that utilize the MAC and a service flow. The service flow defines the QoS parameters for the PDUs that are exchanged on the connection.

The concept of a service flow on a transport connection is central to the operation of the MAC protocol. Service flows provide a mechanism for UL and DL QoS management. In particular, they are integral to the bandwidth allocation process. An SS requests UL bandwidth on a per-connection basis (implicitly identifying the service flow). Bandwidth is granted by the BS to an SS as an aggregate of grants in response to per-connection requests from the SS.

Transport connections, once established, may require active maintenance. The maintenance requirements vary depending upon the type of service connected. For example, unchannelized T1 services require virtually no connection maintenance since they have a constant bandwidth allocated periodically. Channelized T1 services require some maintenance due to the dynamic (but relatively slowly changing)

bandwidth requirements if compressed, coupled with the requirement that full bandwidth be available on demand. IP services may require a substantial amount of ongoing maintenance due to their bursty nature and due to the high possibility of fragmentation. As with connection establishment, modifiable connections may require maintenance due to stimulus from either the SS or the network side of the connection.

Finally, transport connections may be terminated. This generally occurs only when a customer's service requirements change. The termination of a transport connection is stimulated by the BS or SS.

All three of these transport connection management functions are supported through the use of static configuration and dynamic addition, modification, and deletion of service flows.

6.2 Reserved

6.3 Data/Control plane

6.3.1 Addressing and connections

6.3.1.1 Point-to-multipoint (PMP)

Each air interface in an SS shall have a 48-bit universal MAC address, as defined in IEEE Std 802®. This address uniquely defines the air interface of the SS. It is used during the initial ranging process to establish the appropriate connections for an SS. It is also used as part of the authentication process by which the BS and SS each verify the identity of the other.

Connections are identified by a 16-bit CID. At SS initialization, two pairs of management connections, basic connections (UL and DL) and primary management connections (UL and DL), shall be established between the SS and the BS, and a third pair of management connections (secondary management, DL and UL) may be optionally generated. The three pairs of management connections reflect the fact that there are inherently three different levels of QoS for management traffic between an SS and the BS. The basic connection is used by the BS MAC and SS MAC to exchange short, time-urgent MAC management messages. The primary management connection is used by the BS MAC and SS MAC to exchange longer, more delay-tolerant MAC management messages. Table 38 specifies which MAC management messages are transferred on which of these two connections. In addition, it also specifies which MAC management messages are transported on the broadcast connection. Finally, the secondary management connection is used by the BS and SS to transfer delay-tolerant, standards-based [Dynamic Host Configuration Protocol (DHCP), Trivial File Transfer Protocol (TFTP), SNMP, etc.] messages. Messages carried on the secondary management connection may be packed and/or fragmented. For the OFDM, and OFDMA PHYs, management messages shall have CRC. Use of the secondary management connection is required only for managed SS.

The CIDs for these connections shall be assigned in the RNG-RSP, REG-RSP or MOB_BSHO-REQ/RSP for pre-allocation in handover. When CID pre-allocation is used during HO, a primary management CID may be derived based on Basic CID without assignment in the messages (see 6.3.21.2.11). The message dialogs provide three CID values. The same CID value is assigned to both members (UL and DL) of each connection pair.

For bearer services, the BS and the SS may initiate the set-up of service flows based upon the provisioning information. The registration of an SS, or the modification of the services contracted at an SS, stimulates the higher layers of the BS and/or the SS to initiate the setup of the service flows. When admitted or active, service flows are uniquely associated with transport connections. MAC management messages shall never be transferred over transport connections. Bearer or data services shall never be transferred on the basic, primary, or secondary management connections.

Bearer connection CID reassignments during handover or network re-entry shall be sent using the REG-RSP encodings TLV in the RNG-RSP message, the REG-RSP message, or reassigned autonomously without explicit assignment in any message (see 6.3.21.2.11).

Requests for transmission are based on these CIDs, since the allowable bandwidth may differ for different connections, even within the same service type. For example, an SS unit serving multiple tenants in an office building would make requests on behalf of all of them, though the contractual service limits and other connection parameters may be different for each of them.

Many higher layer sessions may operate over the same wireless CID. For example, many users within a company may be communicating with Transmission Control Protocol (TCP)/IP to different destinations, but since they all operate within the same overall service parameters, all of their traffic is pooled for request/grant purposes. Since the original local area network (LAN) source and destination addresses are encapsulated in the payload portion of the transmission, there is no problem in identifying different user sessions.

The type of service and other current parameters of a service are implicit in the CID; they may be accessed by a lookup indexed by the CID.

6.3.2 MAC PDU formats

MAC PDUs shall be of the form illustrated in Figure 20. Each PDU shall begin with a fixed-length MAC header. The header may be followed by the Payload of the MAC PDU. If present, the Payload shall consist of zero or more subheaders and zero or more MAC SDUs and/or fragments thereof. The payload information may vary in length, so that a MAC PDU may represent a variable number of bytes. This allows the MAC to tunnel various higher layer traffic types without knowledge of the formats or bit patterns of those messages.

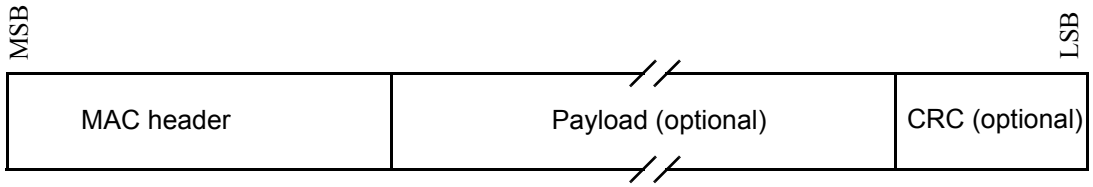

Figure 20— MAC PDU formats

A MAC PDU may contain a CRC, as described in 6.3.3.5. Implementation of CRC capability is mandatory for OFDM and OFDMA PHYs. All reserved fields shall be set to zero on transmission and ignored on reception.

6.3.2.1 MAC header formats

The MAC header formats are defined in Table 3.

Table 3—MAC header formats

Syntax	Size (bit)	Notes
MAC Header() {	—	—
HT	1	0 = Generic MAC header 1 = Bandwidth request (BR) header
EC	1	If HT = 1, EC = 0
if (HT == 0) {	—	—
Type	6	—
Reserved	1	Shall be set to zero
CI	1	—
EKS	2	—
Reserved	1	Shall be set to zero
LEN	11	—
}	—	—
else {	—	—
Type	3	—
BR	19	—
}	—	—
CID	16	—
HCS	8	—
}	—	—

There is one defined DL MAC header, which is the Generic MAC header, which begins each DL MAC PDU containing either MAC management messages or CS data. There are two defined UL MAC header formats. The first is the generic MAC header that begins each MAC PDU containing either MAC management messages or CS data, where the header type (HT) is set to 0 as shown in Table 4. The second is the MAC header format without payload where HT is set to 1 as shown in Table 4. For the latter format, the header is not followed by any MAC PDU payload and CRC.

Table 4—MAC header HT and EC fields encoding

HT	EC[a]	MAC PDU type	Reference figure	Reference table
0	0	Generic MAC header for DL and UL. MAC PDU with data payload, no encryption, with a 6-bit type field, see Table 6 for its type field encodings.	Figure 21	Table 5
0	1	Generic MAC header for DL and UL. MAC PDU with data payload, with encryption with a 6-bit type field, see Table 6 for its type field encodings.	Figure 21	Table 5
1	0	DL: This encoding is not defined UL: MAC signaling header type I. MAC PDU without data payload, with a 3-bit type field, see Table 7 for type encoding definitions.	Figure 22, Figure 23, Figure 24–Figure 29	Table 7, Table 8, Table 9–Table 14
1	1	DL: Compressed/Reduced Private DL-MAP[b] UL: MAC signaling header type II. MAC PDU without data payload, with 1-bit type field, see Table 15 for type encoding definitions.	Figure 30–Figure 32	Table 15, Table 16

[a]Headers with HT = 1 shall not be encrypted. Thus the EC field is used to distinguish between feedback MAC header (UL)/Compress MAP (DL), and all other type headers.

[b]Compressed DL-MAP and Reduced Private MAP do not use MAC headers as defined in 6.3.2.1; however, the first two bits of these maps replace the HT/EC fields and are always set to 0b11 to identify them as such (see 8.3.6.3, 8.3.6.7, 8.4.5.6, and 8.4.5.8). If the most significant bit of the Type field is set to 0, it indicates the presence of a compressed/reduced private DL-MAP. If the most significant bit of the Type field is set to 1, it indicates the presence of a SUB-DL-UL-MAP.

6.3.2.1.1 Generic MAC header

The generic MAC header is illustrated in Figure 21.

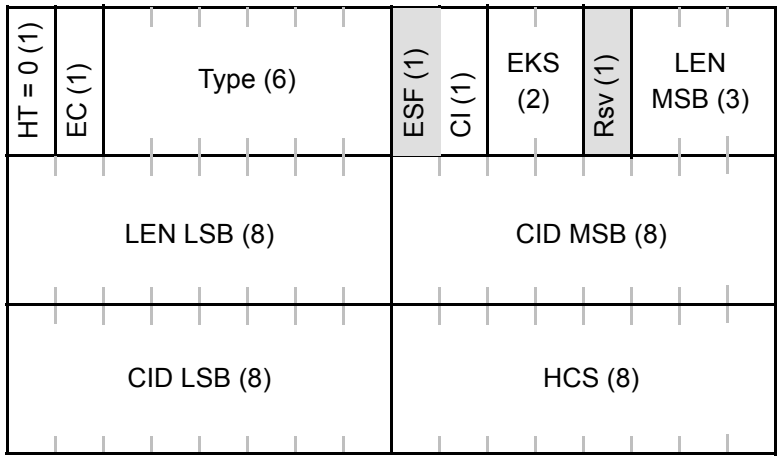

Figure 21—Generic MAC header format

The fields of the generic MAC header are defined in Table 5. Every header is encoded, starting with the HT and encryption control (EC) fields. The coding of these fields is such that the first byte of a MAC header shall never have the value of 0xFX, where "X" means "do not care." This prevents false detection on the stuff byte used in the transmission convergence sublayer (TCS).

Table 5—Generic MAC header fields

Name	Length (bit)	Description
CI	1	CRC indicator. 1 = CRC is included in the PDU by appending it to the PDU payload after encryption, if any. 0 = No CRC is included.
CID	16	Connection identifier.
EC	1	Encryption control. 0 = Payload is not encrypted or payload is not included. 1 = Payload is encrypted.
EKS	2	Encryption key sequence. The index of the traffic encryption key (TEK) and initialization vector (IV) used to encrypt the payload. This field is only meaningful if the EC field is set to 1.
ESF	1	Extended Subheader field. If ESF = 0, the extended subheader is absent. If ESF = 1, the extended subheader is present and shall follow the generic MAC header immediately. (See 6.3.2.2.7.) The ESF is applicable both in the DL and in the UL.
HCS	8	Header check sequence. An 8-bit field used to detect errors in the header. The transmitter shall calculate the HCS value for the first five bytes of the cell header, and insert the result into the HCS field (the last byte of the MAC header). It shall be the remainder of the division (Modulo 2) by the generator polynomial $g(D = D^8 + D^2 + D + 1$ of the polynomial D^8 multiplied by the content of the header excluding the HCS field. (Example: [HT EC Type] = 0x80, BR = 0xAAAA, CID = 0x0F0F; HCS would then be set to 0xD5).

Table 5—Generic MAC header fields *(continued)*

Name	Length (bit)	Description
HT	1	Header type. Shall be set to zero.
LEN	11	Length. The length in bytes of the MAC PDU including the MAC header and the CRC if present.
Type	6	This field indicates the subheaders and special payload types present in the message payload.

The ESF bit in the Generic MAC header indicates that the extended subheader is present. Using this field, a number of additional subheaders can be used within a PDU. The extended subheader shall always appear immediately after the Generic MAC header and before all other subheaders. Contrary to the other subheaders, extended subheaders are not considered part of the MAC PDU payload and, hence are not encrypted. When an entity transmits a MAC PDU without a payload, it shall set the EC bit in the Generic MAC header to 0, even if the connection on which it transmits the MAC PDU is associated with data encryption. When an entity receives a MAC PDU that does not contain a payload, it shall process this MAC PDU if the EC bit is set to 0, and should discard this MAC PDU if the EC bit is set to 1.

The definition of the Type field is indicated in Table 6.

Table 6—Type encodings

Type bit	Value
#5 most significant bit (MSB)	*Reserved*
#4	ARQ feedback payload 1 = present, 0 = absent
#3	Extended type Indicates whether the present packing subheader (PSH) or fragmentation sub-header (FSH) is extended for non-ARQ-enabled connections 1 = Extended 0 = Not extended For ARQ-enabled connections, this bit shall be set to 1.
#2	Fragmentation subheader (FSH) 1 = present, 0 = absent
#1	Packing subheader (PSH) 1 = present, 0 = absent
#0 least significant bit (LSB)	DL: Fast-feedback allocation subheader (FFSH) UL: Grant management subheader (GMSH) 1 = present, 0 = absent

6.3.2.1.2 MAC header without payload

This MAC header format is applicable to UL only. The MAC header is not followed by any MAC PDU payload and CRC.

6.3.2.1.2.1 MAC signaling header type I

For this MAC header format, there is no payload following the MAC header. The MAC signaling header type I is illustrated in Figure 22. Table 7 describes the encoding of the 3-bit Type field following the EC field.

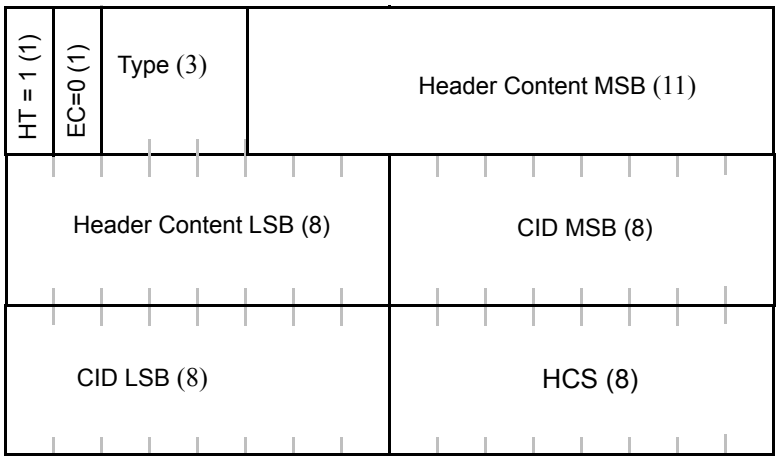

Figure 22—MAC signaling header type I format

Table 7—Type field encodings for MAC signaling header type I

Type field (3 bits)	MAC header type (with HT/EC = 0b10)	Reference figure	Reference table
000	BR incremental	Figure 23	Table 8
001	BR aggregate	Figure 23	Table 8
010	PHY channel report	Figure 27	Table 12
011	BR with UL Tx power report	Figure 24	Table 9
100	BR and CINR report	Figure 25	Table 10
101	BR with UL sleep control	Figure 28	Table 13
110	SN Report	Figure 29	Table 14
111	CQICH allocation request	Figure 26	Table 11

6.3.2.1.2.1.1 Bandwidth request (BR) header

The BR PDU shall consist of BR header alone and shall not contain a payload. The BR header is illustrated in Figure 23. An MS receiving a BR header on the DL shall discard the PDU.

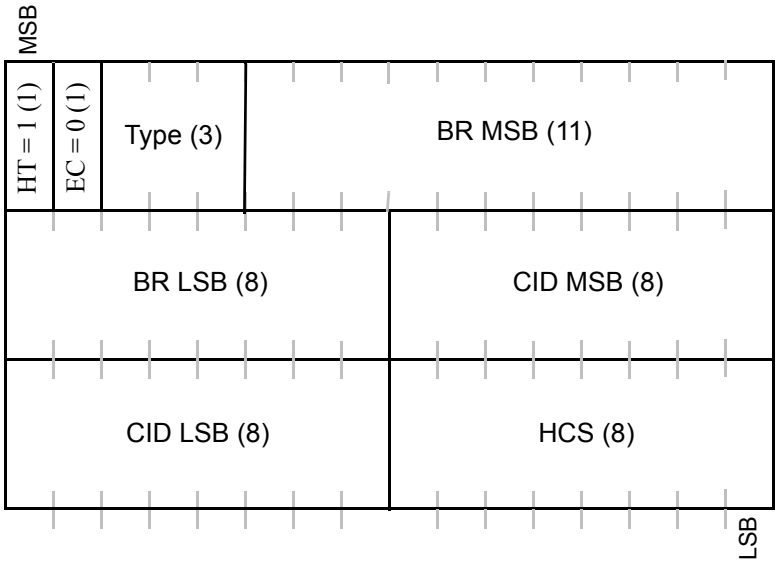

Figure 23—BR header format

The BR header shall have the following properties:

a) It is a MAC signaling header type I.
b) The CID shall indicate the connection for which UL bandwidth is requested.
c) The BR field shall indicate the number of bytes requested.
d) The allowed types of BRs are defined in Table 7.

An SS receiving a BR header on the DL shall discard the PDU.

The fields of the BR header are defined in Table 8.

Table 8—BR header fields

Name	Length (bit)	Description
BR	19	Bandwidth request. The number of bytes of UL bandwidth requested by the SS. The BR is for the CID. The request shall be independent of the physical layer modulation and coding.
CID	16	Connection identifier.
EC	1	Always set to zero.
HCS	8	Header check sequence. Same usage as HCS entry in Table 5.
HT	1	Header type = 1.
Type	3	Indicates the type of BR header.

6.3.2.1.2.1.2 Bandwidth request and UL Tx power report header

The BR and UL Tx power report PDU shall consist of BR and UL Tx power report header alone and shall not contain a payload. The BR and UL Tx power report header is illustrated in Figure 24.

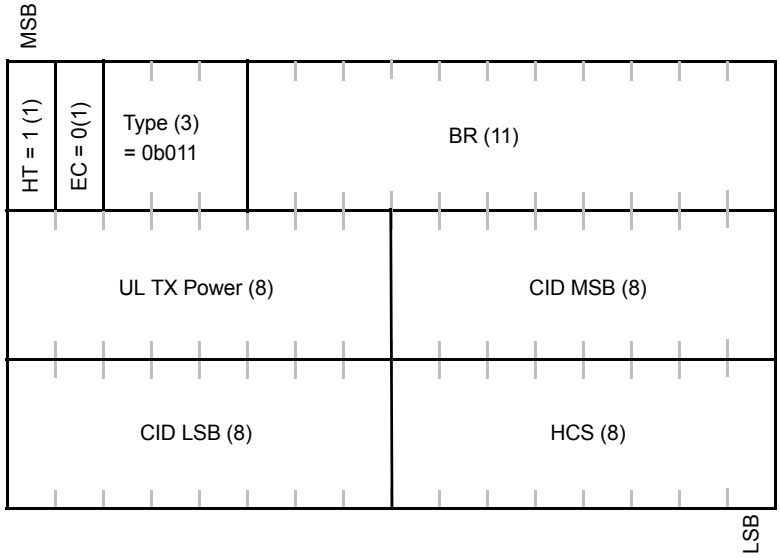

Figure 24—BR and UL Tx power report header format

The BR and UL Tx power report header shall have the following properties:

a) This is a MAC signaling header type I.
b) The CID shall indicate the connection for which UL bandwidth is requested.
c) The allowed type for BR and UL Tx power report is defined in Table 7. The requested bandwidth is incremental.

The fields of the BR and UL Tx power report header are defined in Table 9.

Table 9—Description of fields BR and UL Tx power report header

Name	Size (bit)	Description
Type	3	The type of BR and UL Tx power report header is defined in Table 7.
BR	11	Bandwidth request. The number of bytes of UL bandwidth requested by the MS. The BR is for the CID. The request shall be independent of the physical layer modulation and coding. It is an incremental BR. In case of the Extended rtPS, the BS changes its grant size to the value specified in this field.
UL Tx power	8	UL Tx power level in dBm for the burst that carries this header (as described in 11.1.1). The value shall be estimated and reported for the burst.
CID	16	The connection identifier that shall indicate the connection for which UL bandwidth is requested.
HCS	8	Header check sequence (same usage as HCS entry in Table 5).

Support of this subheader shall be negotiated between the BS and MS as part of the registration dialog (REG-REQ/RSP).

6.3.2.1.2.1.3 BR and CINR report header

BR and CINR report PDU shall consist of BR and CINR report header alone, and shall not contain a payload (see Figure 25).

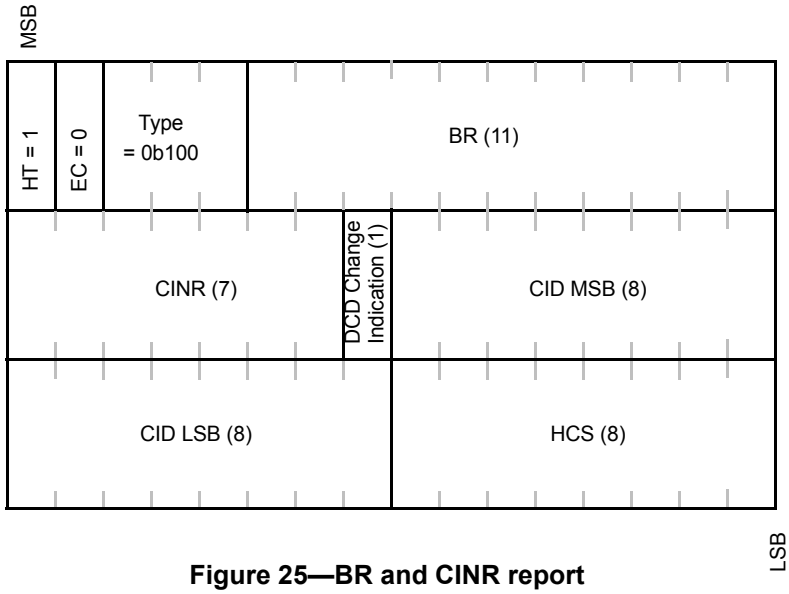

Figure 25—BR and CINR report

The BR and CINR report header shall have the following properties:

a) This is a MAC signaling header type I.
b) The CID shall indicate the connection for which UL bandwidth is requested.
c) The allowed type for BR and CINR report header is defined in Table 7. The requested bandwidth is incremental.

The fields of the BR and CINR report header are defined in Table 10.

Table 10—Description of the fields of BR and CINR report header

Name	Length (bit)	Description
Type	3	The type of BR and CINR report header is defined in Table 7.
BR	11	Bandwidth request: The number of bytes of UL bandwidth requested by the MS. The BR is for the CID. The request shall not include any PHY overhead. It is an incremental BR. In the case of Extended rtPS, the BS changes its grant size to the value specified in this field.
CINR	7	—
DCD Change Indications	1	—
CID	16	The connection identifier that shall indicate the connection for which UL bandwidth is requested.
HCS	8	Header check sequence (same usage as HCS entry in Table 5).

CINR

This parameter indicates the CINR measured by the MS from the BS. It shall be interpreted as a single value from –16.0 dB to 47.5 dB in units of 0.5 dB.

DCD Change Indication

This parameter is set to 1 if the DCD change count stored at the MS is not equal to that in the received DL-MAP message. Otherwise, it is set to 0.

Support of this subheader shall be negotiated between the BS and MS as part of the registration dialog (REG-REQ/RSP).

6.3.2.1.2.1.4 CQICH allocation request header

The CQICH allocation request PDU shall consist of a CQICH allocation request header alone and shall not contain a payload. This header is sent by the MS to request the allocation of a CQICH. The CQICH allocation request header is illustrated in Figure 26.

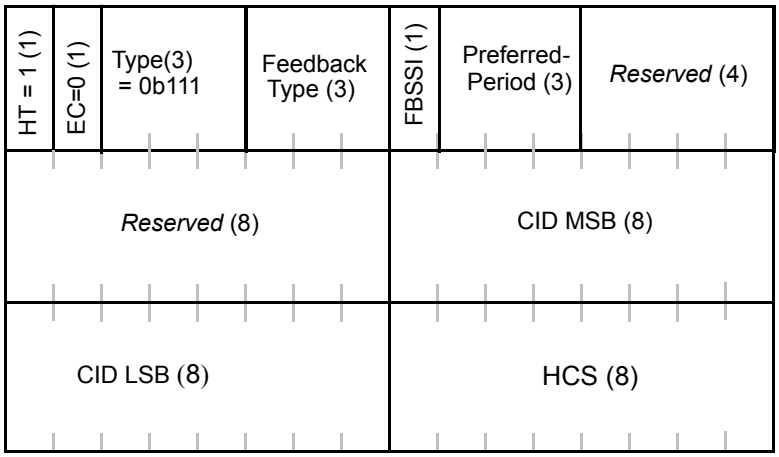

Figure 26— CQICH allocation request

The CQICH allocation request header shall have the following properties:

a) This is a MAC signaling header type I.
b) The CID shall indicate the MS Basic CID.
c) The allowed type for CQICH allocation request is defined in Table 7.

The fields of the CQICH allocation request header are defined in Table 11.

Table 11—Description of the fields of CQICH allocation request header

Name	Length (bit)	Description
Type	3	The type of CQICH allocation request header is defined in Table 7.
Feedback Type	3	Set according to feedback type defined in Table 396. When FBSSI is set to 1, this field is neglected.
FBSSI	1	FBSS Indicator: Set when MS request CQICH during FBSS HO.
Preferred-Period(=p)	3	CQICH allocation period MS prefers. The value is defined in units of frames. When FBSSI is set to 1, the value contained in this field shall be neglected.
Reserved	12	Shall be set to zero.
CID	16	MS basic connection identifier.
HCS	8	Header check sequence (same usage as HCS entry in Table 5).

Support of this subheader shall be negotiated between the BS and MS as part of the registration dialog (REG-REQ/RSP).

6.3.2.1.2.1.5 PHY channel report header

The PHY channel report PDU shall consist of a PHY channel report header alone and shall not contain a payload. The PHY channel report header is illustrated in Figure 27.

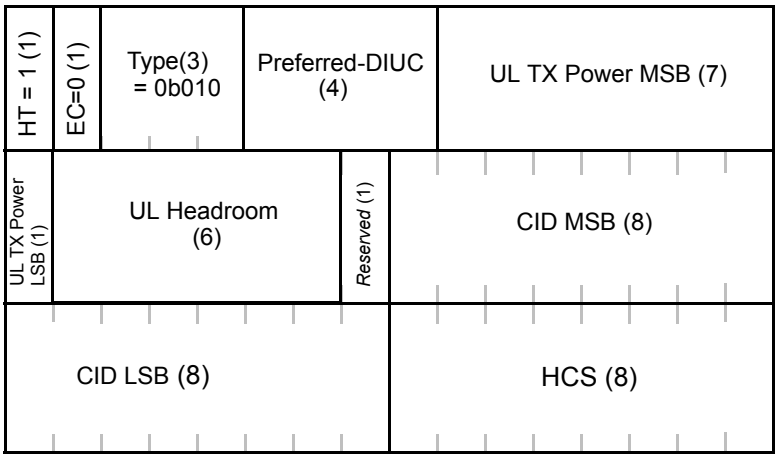

Figure 27—PHY channel report header

The PHY channel report shall have the following properties:

a) This is a MAC signaling header type I.
b) The CID shall indicate the MS Basic CID.
c) The allowed type for PHY channel report is defined in Table 7.

An MS receiving a PHY channel report header on the DL shall discard the PDU.

The fields of the PHY channel report header are defined in Table 12.

Table 12—PHY channel report header fields

Name	Length (bit)	Description
Type	3	The type of PHY channel report header is defined in Table 7.
PREFERRED-DIUC	4	Index of the DIUC preferred by the MS.
UL-TX-POWER	8	UL Tx power level in dBm for the burst that carries this header (11.1.1). The value shall be estimated and reported for the burst.
UL-HEADROOM	6	Headroom to UL maximum power level in dB, for the burst that carries this header, from 0 to 63 in 1 dB steps. Should the headroom exceed 63 dB, the value 63 shall be used. The reported value shall represent the difference between the maximum output power and the maximum power transmitted during the burst.
Reserved	1	Set to zero.
CID	16	MS basic connection identifier.
HCS	8	Header check sequence (same usage as HCS entry in Table 5).

Support of this subheader shall be negotiated between the BS and MS as part of the registration dialog (REG-REQ/RSP).

6.3.2.1.2.1.6 BR and UL sleep control header

The BR and UL sleep control header is sent by the MS to request activation/deactivation of certain power saving class. The header also indicates incremental transmission demand. The BR and UL sleep control PDU shall consist of a BR and UL sleep control header alone and shall not contain a payload. The BR and UL sleep control header is illustrated in Figure 28.

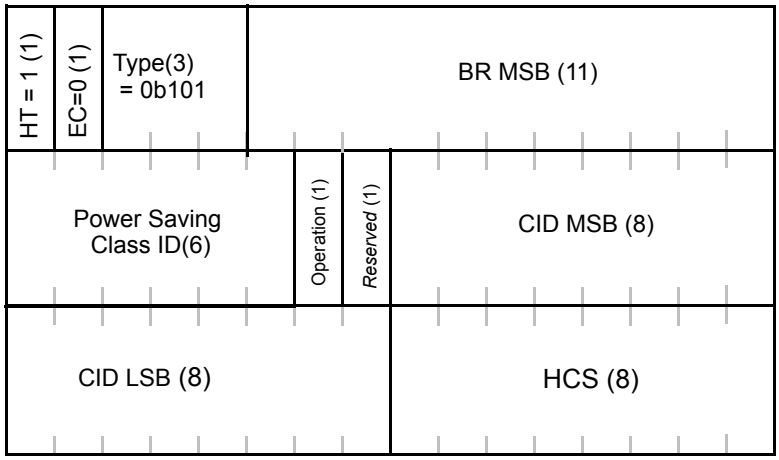

Figure 28—BR and UL sleep control header

The BR and UL sleep control header shall have the following properties:

a) This is a MAC signaling header type I.
b) The CID shall indicate the connection for which the uplink bandwidth is requested.
c) The allowed type for BR and UL sleep control is defined in Table 7.

An MS receiving a BR and UL sleep control header on the DL shall discard the PDU.

The fields of the BR and UL sleep control header are defined in Table 13.

Table 13—BR and UL sleep control header fields

Name	Length (bit)	Description
Type	3	The type of BR and UL sleep control header is defined in Table 7.
BR	11	Bandwidth request: The number of bytes of UL bandwidth requested by the MS. The BR is for the CID. The request shall not include any PHY overhead. It is an incremental BR. In the case of Extended rtPS, the BS changes its grant size to the value specified in this field.
Power_Saving_Class_ID	6	Power saving class identifier.
Operation	1	1: Activate power saving class. 0: Deactivate power saving class.
Reserved	1	Shall be set to zero.
CID	16	The CID shall indicate the connection for which uplink bandwidth is requested.
HCS	8	Header check sequence (same usage as HCS entry in Table 5).

Support of this subheader shall be negotiated between the BS and MS as part of the registration dialog (REG-REQ/RSP).

6.3.2.1.2.1.7 SN report header

The SN report header is sent by the MS to report the LSB of the next ARQ BSN or the virtual MAC SDU Sequence number for the active connections with SN Feedback enabled. The SN report header is illustrated in Figure 29.

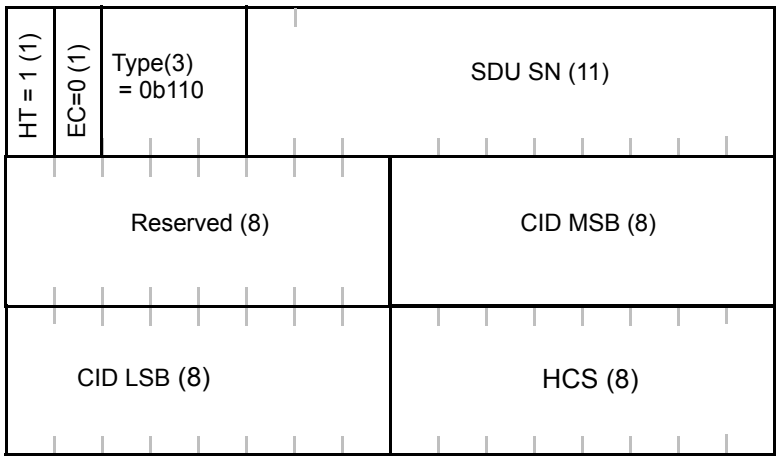

Figure 29—SN report header format

The SN report header shall be of the form illustrated in Figure 29. The SN report header shall have the following properties:

a) This is a MAC signaling header type I.
b) The CID shall indicate the basic connection of the MS for which the SN Report is being sent.
c) The allowed type for SN report header is defined in Table 7.
d) The SDU SN field shall indicate the next ARQ BSN or the virtual MAC SDU Sequence number for the active connections with SN Feedback enabled. In the latter case, the 8-bit virtual MAC SDU Sequence number shall be mapped into the LSBs of the SDU SN and the three MSBs of the SDU SN shall be set to zero.

An MS receiving a SN report header on the DL shall discard the PDU.

The fields of the SN report header are defined in Table 14.

Table 14—SN report header fields

Name	Length (bit)	Description
Type	3	Set to 0b110. Indicates that it is a SN report header.
SDU SN	11	The ARQ BSN or MAC SDU SN for the Service Flow addressed in this header.
Reserved	8	Shall be set to zero.
CID	16	Connection identifier.
HCS	8	Header check sequence.

Support of this subheader shall be negotiated between the BS and MS as part of the registration dialog (REG-REQ/RSP).

6.3.2.1.2.2 MAC signaling header type II

This type of MAC header is UL-specific. There is no payload following the MAC header. The MAC signaling header type II is illustrated in Figure 30. Table 15 describes the encoding of the 1-bit type field following the EC field. The description of DL MAC header format with HT/EC = 0b11, defined as the Compressed DL-MAP, is not part of this subclause. The detailed description can be found in 8.4.5.6.1.

Table 15—Type field encodings for MAC signaling header type II

Type field	MAC header type (with HT/EC = 0b11)	Reference figure	Reference table
0	Feedback header, with another 4-bit type field; see Table 17 for its type encodings.	Figure 31, Figure 32	Table 16
1	*Reserved*	—	—

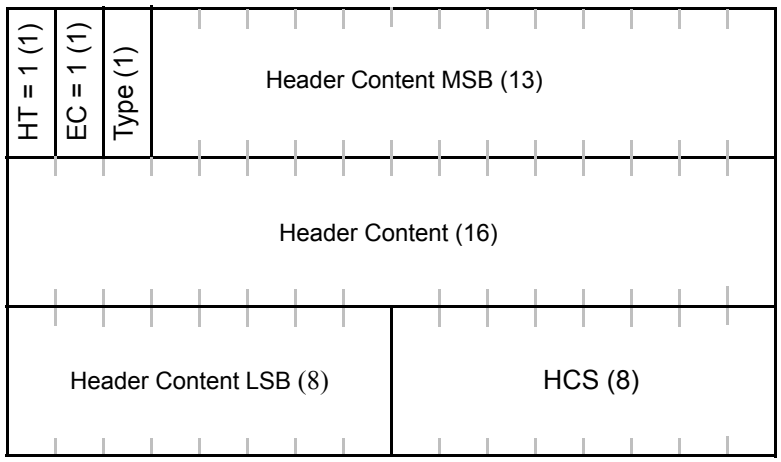

Figure 30—MAC signaling header type II format

6.3.2.1.2.2.1 Feedback header

The feedback header is sent by an MS either as a response to a Feedback Polling IE (see 8.4.5.4.26) or as an unsolicited feedback. When sent as a response to a Feedback Polling IE, the MS shall send a feedback header using the assigned resource indicated in the Feedback Polling IE. When sent as unsolicited feedback, the MS can either send the feedback header on currently allocated UL resource or request additional UL resource by sending an Indication flag on the fast-feedback channel or the enhanced fast-feedback channel (refer to 8.4.11.11) or by sending a BR ranging code.

The feedback PDU shall consist of the feedback header alone and shall not contain a payload. The feedback header with and without the CID field are illustrated in Figure 31 and Figure 32. The feedback header with the CID field shall be used when the UL resource used to send the feedback header is requested through BR ranging. Otherwise, the feedback header without the CID field shall be used.

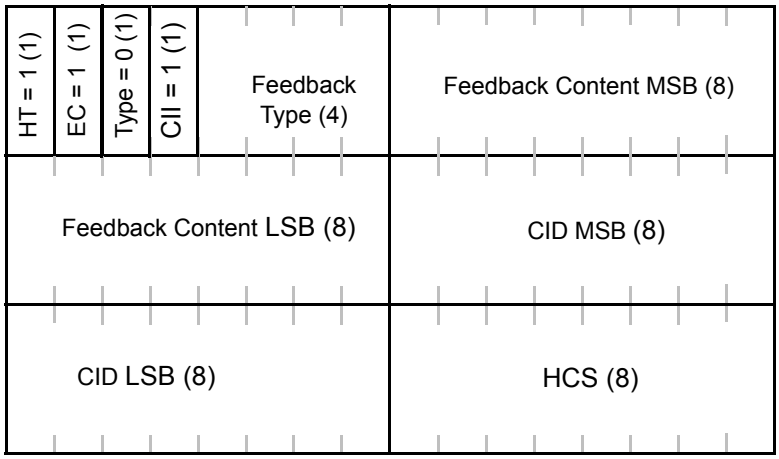

Figure 31— Feedback header with CID field

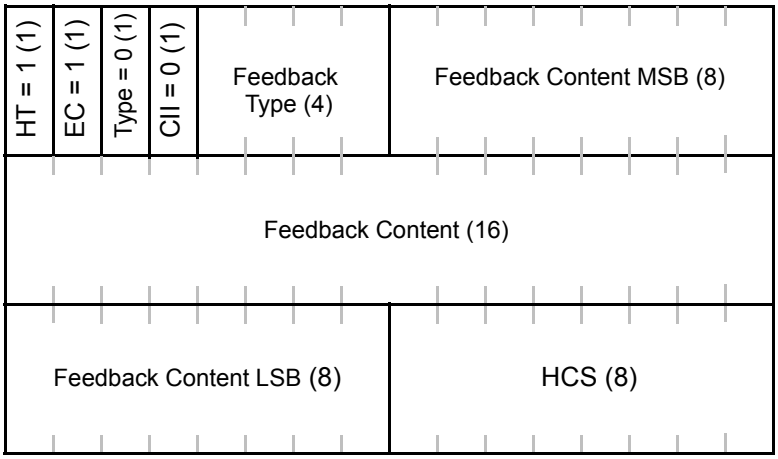

Figure 32—Feedback header without CID field

The fields of feedback header are defined in Table 16.

Table 16—Description of the fields of feedback header

Name	Length (bit)	Description
CII	1	CID inclusion indication. Set to 1 for a feedback header with the CID field; set to 0 for a feedback header without the CID field.
Feedback Type	4	Set according to Table 17.

Table 16—Description of the fields of feedback header *(continued)*

Name	Length (bit)	Description
Feedback Content	16 or 32	Set according to Table 17. Length of 16 bits for a feedback header with the CID field and length of 32 bits for a feedback header without the CID field.
CID	16	(optional) Basic CID
HCS	8	Header check sequence (same usage as HCS entry in Table 5).

The feedback header shall have the following properties:

a) This is a MAC signaling header type II. The length of the header shall always be 6 bytes.
b) The allowed type for feedback header is defined in Table 15.
c) The Feedback Type field shall be set according to Table 17.
d) The CII field (CID Inclusion Indication) shall be set to 1 for the header with CID field and set to 0 for the header without CID field.
e) The Feedback Content field shall be set accordingly based on the value of the feedback type field.
f) When the size of the defined content, as given in Table 17, for any Feedback type is less than the size of the Feedback Contents field, the defined content shall be bit-aligned to the LSB of the Feedback Contents field and all unused bits of the Feedback Contents field shall be set to a value of ‘0’.

The feedback header may be used by the MS to provide its feedback(s). An MS receiving a feedback header on the DL shall discard the PDU.

The support of feedback header is OFDMA-PHY-specific and shall be negotiated between the BS and the MS as part of the registration dialog (REG-REQ/RSP).

Table 17—Feedback type and feedback content

Feedback type (binary)	Feedback contents	Description
0000	MIMO feedback type (3 bits) + feedback payload (6 bits)	CQI and MIMO feedback. The definition of MIMO feedback type (3 bits) and the corresponding feedback payload (6 bits) are the same as that defined in Table 396 and 8.4.11.4, 8.4.11.5, 8.4.11.6, 8.4.11.7, 8.4.11.8, 8.4.11.9, 8.4.11.10 for the enhanced fast-feedback channel.
0001	DL average CINR (5 bits)	DL average CINR of the serving or anchor BS (for the case of FBSS), with 5-bit payload encoding as defined in 8.4.5.4.11.
0010	Number of index, L (2 bits) + L occurrences of Antenna index (2 bits) + MIMO coefficients (5 bits, see definition in 8.4.11.7)	MIMO coefficients feedback for up to four antennas.
0011	Preferred-DIUC (4 bits) + DCD change count (4 bits)	Preferred DL channel DIUC feedback.

Table 17—Feedback type and feedback content *(continued)*

Feedback type (binary)	Feedback contents	Description
0100	UL-TX-Power (8 bits) (see Table 9 for definition)	UL transmission power.
0101	PREFERRED DIUC (4 bits) + UL TX-POWER (8 bits) + UL-HEADROOM (6 bits) (see Table 12 for definitions)	PHY channel feedback.
0110	AMC band indication bitmap (12 bits, see 6.3.2.3.38.2) + N CQI (N × 5 bits). N is the number of ones in the AMC band indication bitmap + CL-MIMO type (2 bits) + 1 bit rank information per band for N best bands (N × 1 bits).	CQIs of up to three (N ≤ 3) AMC bands. The 1 bit rank/band (or number of streams) for N bands are indicated as follows: '0' for rank 1 and 1 for rank 2.
0111	Life span of short-term precoding feedback (4 bits) according to Table 477.	The recommended number of frames for which the short-term precoding feedback can be used.
1000	Number of feedback types, *0* (2 bits) + *0* occurrences of "feedback type (4 bits) + feedback content (variable)"	Multiple types of feedback.
1001	Feedback of index to long-term precoding matrix in codebook (6 bits), rank of precoding codebook (2 bits) and FEC and QAM feedback (6 bits) according to Table 476.	Long-term precoding feedback.
1010	Combined DL average CINR of active BSs (5 bits).	Combined DL average CINR of all active BSs within the diversity set, with 5-bit payload encoding as defined in 8.4.5.4.13.
1011	MIMO channel feedback (see Table 18 for description of feedback content fields).	MIMO mode channel condition feedback.

Table 17—Feedback type and feedback content *(continued)*

Feedback type (binary)	Feedback contents	Description
1100	CINR Mean (8 bits) + CINR Standard Deviation (8 bits)	CINR Feedback (values and coding defined in 8.4.12.3).
1101	CL MIMO type (2 bits) If (CL MIMO type == 0b00 {Antenna grouping index (4 bits) + average CQI (5 bits) } Elseif (CL MIMO type == 0b01 {Number of streams (2 bits) + Antennas selection option index (3 bits) + average CQI (5 bits) of the selected antennas} Elseif (CL MIMO type == 0b10) {Codebook index for N best AMC bands (N × 6 bits)+ 2 bits differential CQI per band for the N best bands (N × 2 bits) }	Closed-loop MIMO feedback CL MIMO type: 0b00: antenna grouping 0b01: antenna selection 0b10: codebook 0b11: indication of transition from closed-loop MIMO to open-loop MIMO Antenna grouping index: 0b0000~ 0b1001 = 0b101110 ~ 0b110110 in Table 525 Antenna selection option index: 0b000 ~0b010 = 0b110000 ~ 0b110010 in Table 474 for 3 Tx antenna 0b000~0b101 = 0b110000~0b110101 in Table 475 for 4 Tx antenna Codebook index: (See 8.4.8.3.6.) The 2 bit differential CQI denotes +2, +1, –1, –2 dB. The number of best bands is up to three (N ≤ 3). A BS may issue the Feedback_Polling _IE to request feedback header type 1101 without requesting feedback type 0110 to trigger the AMC CL MIMO operation, in this case, a MS shall over ride the feedback type 1101 by 0110 for the first report and may over ride the type 1101 whenever necessary. The BS may use the previously reported PMIs and differential CQIs when the MS over ride the feedback type to 0110.
1110–1111	*Reserved for future use*	—

6.3.2.1.2.2.1.1 MIMO channel feedback header

The MIMO channel feedback header is used for MS to provide DL MIMO channel quality feedback to the BS. The MIMO channel feedback header can be used to provide a single or composite channel feedback. The MIMO channel feedback header with or without Basic CID field is illustrated in Figure 33 and Figure 34, respectively.

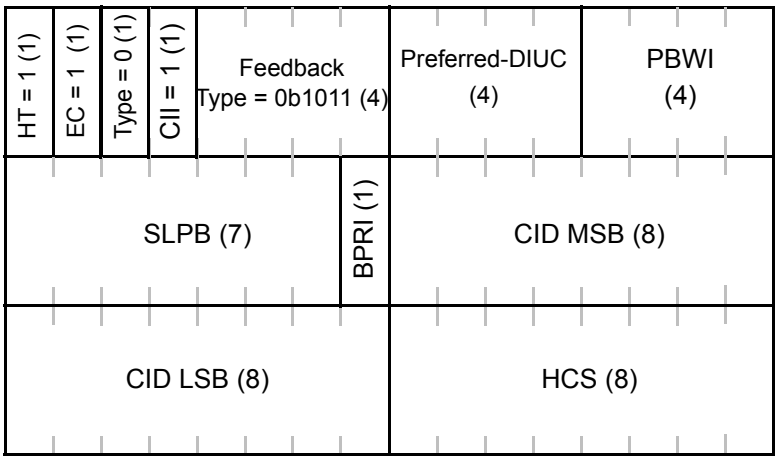

Figure 33—MIMO channel feedback header with CID field

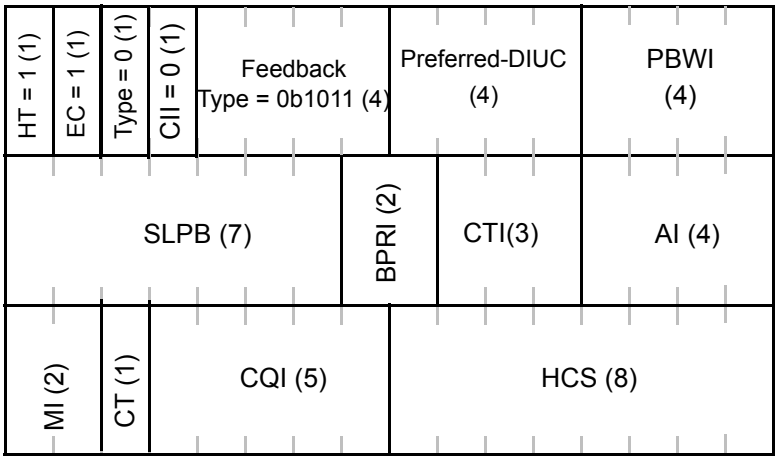

Figure 34—MIMO channel feedback header without CID field

The fields of MIMO channel feedback header are defined in Table 18.

Table 18—Description of MIMO channel feedback header fields

Name	Length (bit)	Description
Feedback Type	4	Feedback type of MIMO channel feedback header is defined in Table 17.
PREFERRED-DIUC	4	Index of the preferred DIUC suggested by the MS.

Table 18—Description of MIMO channel feedback header fields *(continued)*

Name	Length (bit)	Description
PBWI	4	Preferred bandwidth index. This field provides the size of the preferred bandwidth, which can be used for DIUC transmission. PBWI indicates the ratio of the preferred bandwidth over used channel bandwidth: 0b0000: 1 0b0001: 3/4 0b0010: 2/3 0b0011: 1/2 0b0100: 1/3 0b0101: 1/4 0b0110: 1/5 0b0111: 1/6 0b1000: 1/8 0b1001: 1/10 0b1010: 1/12 0b1011: 1/16 0b1100: 1/24 0b1101: 1/32 0b1110: 1/48 0b1111: 1/64 where Ratio = $BW_{preferred}/BW_{used}$, $BW_{preferred}$: Preferred bandwidth for DIUC transmission, BW_{used}: Actual used channel bandwidth (excluding guard bands).
SLPB	7	Starting location of preferred bandwidth: 0–127. This field points to the starting preferred bandwidth location. This field, combined with the PBWI field, tells the BS the exact size and location of the preferred bandwidth in the channel. The effective bandwidth (used bandwidth) is divided into 128 intervals numbered 0 to 127 counting from the lower to the higher band. SLPB indicates the starting location of preferred bandwidth for the DIUC burst profile.
BPRI	1/2	Burst profile ranking indicator. This field can be used to rank up to four preferred burst profiles within the DL channel. BPRI (without Basic CID) indicates the ranking for DL channel condition of the preferred bandwidth as reported in the current header where 0 is the most preferred bandwidth: 0b00: 1st preferred burst profile 0b10: 2nd preferred burst profile 0b01: 3rd preferred burst profile 0b11: 4th preferred burst profile BPRI (including Basic CID): 0b0: 1st preferred burst profile 0b1: 2nd preferred burst profile This field is 1 bit when CII is set to 1; otherwise, this field is 2 bits.
CTI	3	Coherent time index. This field provides coherent time information. CTI indicates the estimated duration of the valid MIMO channel conditions: 0b000: Infinite 0b001: 1 frame 0b010: 2 frames 0b011: 3 frames 0b100: 4 frames 0b101: 8 frames 0b110: 14 frames 0b111: 24 frames This field is present only when CII is set to 0.

Table 18—Description of MIMO channel feedback header fields *(continued)*

Name	Length (bit)	Description
AI	4	Antenna index. This field is for antenna indication. It can support up to four antennas. This feedback header can report a composite channel condition; each bit represents for each antenna: "1" is applicable, "0" is not applicable. AI: Bit 0 (MSB)– Antenna 0 Bit 1 – Antenna 1 Bit 2 – Antenna 2 Bit 3 (LSB) – Antenna 3 This field is present only when CII is set to 0.
MI	2	Matrix indicator. This field suggests the preferred STC/MIMO matrix for the MS: 0b00: No STC 0b01: Matrix A 0b10: Matrix B 0b11: Matrix C This field is present only when CII is set to 0.
CT	1	CQI type. This field indicates the type of CQI feedback in the CQI field: 0: DL average CQI feedback 1: CQI feedback for the preferred bandwidth indicated in the current header This field is present only when CII is set to 0.
CQI	5	CQI feedback. This field is present only when CII is set to 0.
CID	16	MS basic connection identifier. This field is present only when CII is set to 1.
HCS	8	Header check sequence (same usage as HCS entry in Table 5).

6.3.2.2 MAC subheaders and special payloads

Five types of subheaders may be present in a MAC PDU with generic MAC header; four per-PDU subheader types and one per-SDU subheader type. The per-PDU subheaders (i.e., extended subheaders, FSH, FFSH, and GMSH) may be inserted in the MAC PDUs immediately following the generic MAC header. If both the FSH and GMSH are indicated, the GMSH shall come first. In the DL, the FFSH shall always appear as the last per-PDU subheader. The ESF bit in the generic MAC header indicates that one or more extended subheaders are present in the PDU. The extended subheaders shall always appear immediately after the generic MAC header and before all other subheaders. All extended subheaders are not encrypted. (See 6.3.2.2.7.)

The only per-SDU subheader is the PSH. It may be inserted before each MAC SDU if so indicated by the Type field. The PSH and FSH are mutually exclusive and shall not both be present within the same MAC PDU.

When present, per-PDU subheaders shall always precede the first per-SDU subheader.

6.3.2.2.1 Fragmentation subheader (FSH)

The FSH is shown in Table 19.

Table 19—FSH format

Syntax	Size (bit)	Notes
Fragmentation Subheader() {	—	—
FC	2	Indicates the fragmentation state of the payload: 00 = No fragmentation 01 = Last fragment 10 = First fragment 11 = Continuing (middle) fragment
if (ARQ-enabled Connection)	—	—
BSN	11	Sequence number of the first block in the current SDU fragment.
else {	—	—
if (**Type** bit **Extended Type**)	—	See Table 6.
FSN	11	Sequence number of the current SDU fragment. The FSN value increments by one (modulo 2048) for each fragment, including unfragmented SDUs.
else	—	—
FSN	3	Sequence number of the current SDU fragment. The FSN value increments by one (modulo 8) for each fragment, including unfragmented SDUs.
}	—	—
Reserved	3	Shall be set to zero.
}	—	—

6.3.2.2.2 Grant management subheader (GMSH)

The GMSH is 2 bytes in length and is used by the SS to convey bandwidth management needs to the BS. This subheader is encoded differently based upon the type of UL scheduling service for the connection (as given by the CID). The use of this subheader is defined in 6.3.6. The GMSH is shown in Table 20. Its fields are defined in Table 21. The capability of GMSH at both BS and SS is optional.

Table 20—GMSH format

Syntax	Size (bit)	Notes
Grant Management Subheader {	—	—
if (scheduling service type == UGS) {	—	—
SI	1	
PM	1	
FLI	1	—
FL	4	—
Reserved	9	Shall be set to zero
} else if (scheduling service type == Extended rtPS) {	—	—
Extended piggyback request	11	—
FLI	1	—
FL	4	—
} else {	—	—
PiggyBack Request	16	—
}	—	—
}	—	—

Table 21—GMSH fields

Name	Length (bit)	Description
FLI	1	Frame latency indication 0 = FL field disabled for this grant 1 = FL field enabled for this grant
FL	4	Frame latency. The number of frames previous to the current one in which the transmitted data was available. When the latency is greater than 15 then the FL field shall be set to 15.
Extended Piggyback Request	11	The number of bytes of UL bandwidth requested by the MS. The BR is for the CID. The request shall not include any PHY overhead. In case of Extended rtPS, the BS changes its grant size to the size specified in this field.
PBR	16	Piggyback request. The number of bytes of UL bandwidth requested by the SS. The BR is for the CID. The request shall not include any PHY overhead. The request shall be incremental.
PM	1	Poll me 0 = No action 1 = Used by the SS to request a bandwidth poll.
Reserved	9	—
SI	1	Slip indicator 0 = No action 1 = Used by the SS to indicate a slip of UL grants relative to the UL queue depth.

6.3.2.2.3 Packing subheader (PSH)

When packing (see 6.3.3.4) is used, the MAC may pack multiple SDUs into a single MAC PDU. When packing variable-length MAC SDUs, the MAC precedes each one with a PSH. The PSH is defined in Table 22.

Table 22—PSH format

Syntax	Size (bit)	Notes
Packing Subheader() {	—	—
FC	2	Indicates the fragmentation state of the payload: 00 = no fragmentation 01 = last fragment 10 = first fragment 11 = continuing (middle) fragment
if (ARQ-enabled Connection)	—	—
BSN	11	Sequence number of the first block in the current SDU fragment.
else {	—	—
if (**Type** bit **Extended Type**)	—	See Table 6.
FSN	11	Sequence number of the current SDU fragment. The FSN value shall increment by one (modulo 2048) for each fragment, including unfragmented SDUs and unpacked SDU or SDU fragments.
else	—	—
FSN	3	Sequence number of the current SDU fragment. The FSN value shall increment by one (modulo 8) for each fragment, including unfragmented SDUs and unpacked SDU or SDU fragments.
}	—	—
Length	11	Length of the SDU fragment in bytes including the PSH.
}	—	—

6.3.2.2.4 ARQ feedback

If the ARQ Feedback Payload bit in the MAC Type field (see Table 6) is set, the ARQ Feedback Payload shall be transported. If packing is used, it shall be transported as the first packed payload. See 6.3.3.4.3. Note that this bit does not address the ARQ Feedback payload contained inside an ARQ Feedback message.

6.3.2.2.5 Reserved

6.3.2.2.6 Fast-feedback allocation subheader (FFSH)

The format of the FFSH is specified in Table 23. The FFSH, when used, shall always be the last per-PDU subheader as specified in 6.3.2.2. The support of the FFSH is PHY-specification-specific.

Table 23—FFSH format

Syntax	Size (bit)	Notes
Fast-Feedback Allocation Subheader {		
Allocation offset	6	
Feedback type	2	00 – Fast DL measurement 01 – Fast MIMO feedback, antenna #0 10 – Fast MIMO feedback, antenna #1 11 – MIMO mode and permutation mode feedback
}		

Allocation offset

Defines the offset, in units of slots, from the beginning of the fast-feedback UL bandwidth allocation (8.4.5.4.9), of the slot in which the SS servicing the CID appearing in the generic MAC header shall send a fast-feedback message. Range of values is 0 to 63. The allocation applies to the UL subframe two frames after the frame including the FFSH.

6.3.2.2.7 Extended subheader format

The extended subheader group (see Figure 35), when used, shall always appear immediately after the generic MAC header and before all subheaders, and, if the MAC PDU contains an encrypted payload (i.e., the EC bit is set to 1), the packet number (PN), as described in 6.3.2.2. The extended subheader group format is specified in Table 24, Table 25, and Table 26. Extended subheaders shall not be encrypted.

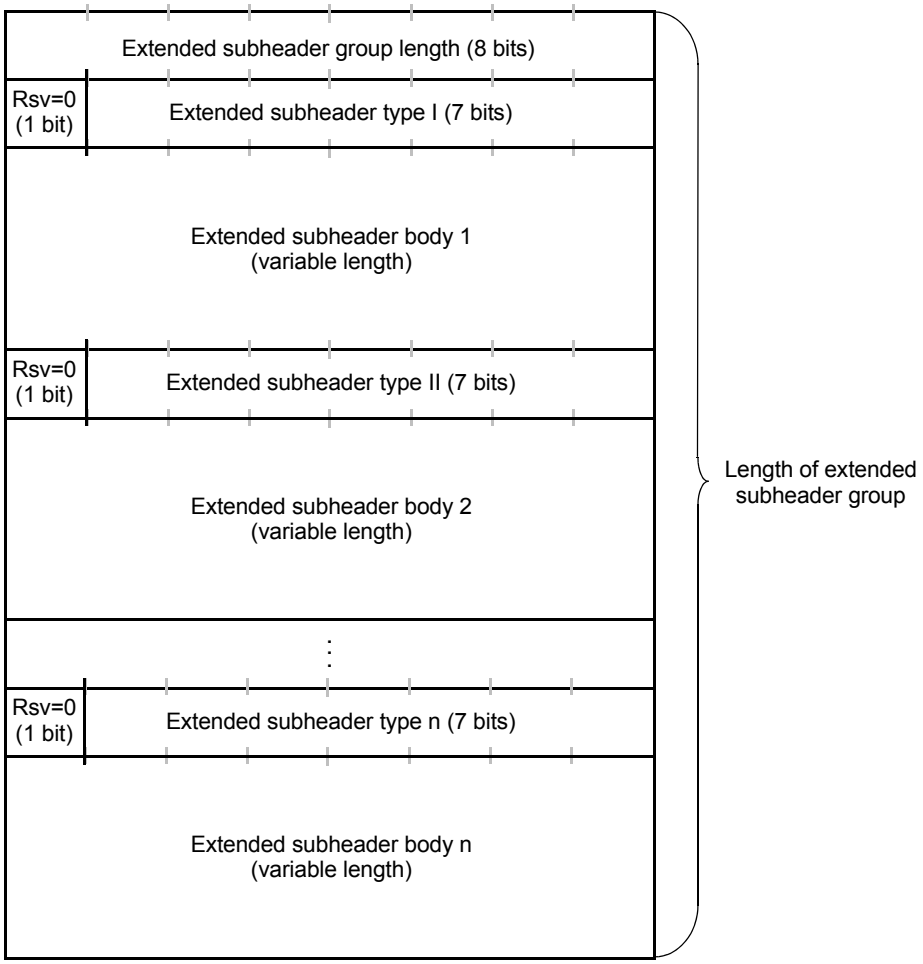

Figure 35—Extended subheader group format

The fields of the extended subheader group structure are described in Table 24.

Table 24—Extended subheader group format

Name	Size (bit)	Description
Extended Subheader Group Length	8	The Extended Subheader Group Length field indicates the total length of the subheader group, including all the extended subheaders and the length byte.
Reserved	1	*Reserved* = 0
Extended Subheader Type	7	Type of subheader as defined in Table 25 and Table 26.
Extended Subheader Body	*variable*	The size of the extended subheader is determined by extended subheader type as specified in Table 25 and Table 26. The size of the extended subheader body is byte aligned.

The extended subheader group starts with an 8-bit Extended Subheader Group Length field that is followed by one or multiple extended subheaders. The length field specifies the total length in bytes of the subheader group, including all the extended subheaders and the length byte. Each extended subheader consists of a reserved bit, a 7-bit Extended Subheader Type field, and a variable-size extended subheader body. The size of each extended subheader is determined by the extended subheader type as specified in Table 25.

The list of defined extended subheaders is given in Table 25 for the DL and in Table 26 for the UL. The support of each extended subheader shall be negotiated between the BS and the MS as part of the registration dialog (REG-REQ/RSP).

Table 25—Description of extended subheaders types (DL)

Extended subheader type	Name	Extended subheader body size (byte)	Description
0	SDU_SN extended subheader	1	See 6.3.2.2.7.1
1	DL sleep control extended subheader	3	See 6.3.2.2.7.2
2	Feedback request extended subheader	3	See 6.3.2.2.7.3
3	SN request extended subheader	1	See 6.3.2.2.7.7
4	PDU SN(short) extended subheader	1	See 6.3.2.2.7.8
5	PDU SN(long) extended subheader	2	See 6.3.2.2.7.8
6–127	*Reserved*	—	—

Table 26—Description of extended subheaders types (UL)

Extended subheader type	Name	Extended subheader body size (byte)	Description
0	MIMO mode feedback extended subheader	1	See 6.3.2.2.7.4
1	UL Tx power report extended subheader	1	See 6.3.2.2.7.5
2	Mini-feedback extended subheader	2	See 6.3.2.2.7.6
3	PDU SN(short) extended subheader	1	See 6.3.2.2.7.8
4	PDU SN(long) extended subheader	2	See 6.3.2.2.7.8
5	Persistent Allocation Error Event	1	See 6.3.2.2.7.10
6	ertPS resumption bitmap extended sub-header	1	See 6.3.2.2.7.9
7–127	*Reserved*	—	—

6.3.2.2.7.1 SDU SN extended subheader

The SDU SN extended subheader shall only be sent by the BS if SDU SN extended subheader capability is supported (negotiated through REG-REQ/RSP) and if SDU_SN Feedback is enabled for a DL connection (negotiated through DSA-REQ/RSP). The SDU SN extended subheader shall contain the last virtual MAC SDU sequence number of current MAC PDU. The format of the SDU SN extended subheader is as described in Table 27.

Table 27—SDU SN extended subheader format

Name	Size (bit)	Description
SDU sequence number	8	Last virtual MAC SDU sequence number in the current MAC PDU.

6.3.2.2.7.2 DL sleep control extended subheader

The DL sleep control extended subheader is sent by the BS to activate/deactivate certain power saving class. The requested operation is effective from the start frame carried in the DL sleep control extended subheader according to the format defined in Table 28. The format of DL sleep control extended subheader is as described in Table 28. The BS may transmit this message to reactivate the Power Saving Class after the BS determines the end of data transmission.

Table 28—DL sleep control extended subheader format

Name	Size (bit)	Description
Power_Saving_Class_ID	6	Indicates the power saving class ID to which this command refers.
Operation	1	1 = Activate power saving class. 0 = Deactivate power saving class.
Final_Sleep_Window_Exponent	3	For power saving class type III only: assigned factor by which the final-sleep window base is multiplied in order to calculate the duration of single sleep window requested by the message.
Final_Sleep_Window_Base	7	For power saving class type III only: the base for duration of single sleep window requested by the message.
Stop_CQI_Allocation_Flag	1 bit	1 = Any CQICH allocations to this MS are cancelled. 0 = CQICH allocations to this MS are still allocated and the MS shall continue to transmit channel quality information on them during its availability intervals.
Start frame	6 bits	6 LSB of frame number to start activation of PSC.

6.3.2.2.7.3 Feedback request extended subheader

Feedback request extended subheader shall only be sent by the BS to provide a UL allocation for a fast-feedback channel transmission (see 8.4.11). The BS shall indicate in the fast-feedback request subheader transmission the applied frame for the UL allocation.

The format of the feedback request extended subheader is as described in Table 29.

Table 29—Feedback request extended subheader format

Name	Size (bit)	Description
UIUC	4	—
Feedback type	4	Shall be set according to Table 17.
OFDMA Symbol offset	6	The offset is relevant to the Allocation Start Time field given in the UL-MAP message.
Subchannel offset	6	The lowest index subchannel used for carrying the burst, starting from subchannel 0.
No. slot	3	The number of slots allocated for the burst.
Frame offset (F)	1	Indicate to report at the frame. If F == 0, the allocation applies to the UL sub-frame two frames ahead of the current frame. If F == 1, four frames ahead of the current frame.

6.3.2.2.7.4 MIMO mode feedback extended subheader

An MS uses the MIMO feedback extended subheader to provide its feedback in terms of MIMO mode feedback. When there is an UL MAC PDU payload to be transmitted at the same time. The format of the MIMO mode feedback extended subheader is as described in Table 30.

Table 30—MIMO mode feedback extended subheader format

Name	Length (bit)	Description
Feedback Type	2	0b00: feedback type 0b000 as defined in Table 396 0b01: feedback type 0b001 as defined in Table 396 0b10: feedback type 0b010 as defined in Table 396 0b11: feedback type 0b011 as defined in Table 396
Feedback Content	6	Feedback contents and the corresponding feedback payload (6 bits) are the same as that defined in Table 396 and 8.4.11.4, 8.4.11.5, 8.4.11.6, 8.4.11.7, 8.4.11.8, 8.4.11.9, 8.4.11.10 for the enhanced fast-feedback channel

For each MS, if a MIMO mode feedback extended subheader is present, it shall only appear in the first unicast PDU transmitted by that MS in that frame.

6.3.2.2.7.5 UL Tx power report extended subheader

This subheader is sent from MS to BS to report the Tx power of the burst that carries this subheader. The format of the UL Tx power report extended subheader is as described in Table 31.

Table 31—UL Tx power report extended subheader format

Name	Size (bit)	Description
UL Tx Power	8	Tx power level for the burst carries this header (11.1.1). The value shall be estimated and reported for the burst.

6.3.2.2.7.6 Mini-feedback extended subheader

The format of the mini-feedback extended subheader is shown in Table 32.

Table 32—Description of mini-feedback extended subheaders (UL)

Name	Size (bit)	Description
Feedback Type	4	Type of feedback: see Table 17
Feedback Content	12	—

6.3.2.2.7.7 SN request extended subheader

The SN request extended subheader is sent by the BS to request the MS to send the SN report header. The fields of the SN request extended subheader are defined in Table 33.

Table 33—Description of SN request extended subheader

Name	Size (bit)	Description
SN Report Indication	1	Bit 0: Set to 1 to request transmission
Reserved	7	Shall be set to zero

6.3.2.2.7.8 PDU SN extended subheader

Specify the PDU sequence number in a monotonic increasing manner. The format of the PDU SN extended subheader is as described in Table 34 and Table 35.

Table 34—PDU SN (short) extended subheader

Name	Size (bit)	Description
PDU SN(short)	8	Specify the PDU SN number

Table 35—PDU SN (long) extended subheader

Name	Size (bit)	Description
PDU SN(long)	16	Specify the PDU SN number

6.3.2.2.7.9 ertPS resumption bitmap extended subheader

An MS may have multiple ertPS service flows that have been stopped by the MS by sending BR headers with BR = 0. When the MS has more than one ertPS service flow to resume at the same time, the MS may include the following extended subheader in a MAC PDU to request the serving BS to resume scheduling of the identified ertPS service flows. When the BS receives this extended subheader, the BS shall allocate a UL burst for each UL ertPS service flow identified by the extended subheader.

Table 36—ertPS resumption bitmap extended subheader

Name	Size (bit)	Description
UL ertPS resumption bitmap	8	One bit is assigned to each UL ertPS service flow in descending order of their SFID (i.e., bit 7 is mapped to the UL ertPS service flow with the highest SFID, bit 6 is mapped to the UL ertPS service flow with the second highest SF, etc.). 1 : Request for resumption of the corresponding ertPS service flow 0 : No request for resumption of the corresponding ertPS service flow

6.3.2.2.7.10 Persistent Allocation Error Event

The Persistent Allocation Error Event is used by the MS to indicate failure with a persistent allocation. The fields of the Persistent Allocation Error Event extended subheader are defined in Table 37.

Table 37—Persistent allocation error event extended subheader

Name	Size (bit)	Description
CID	16	Basic CID

6.3.2.3 MAC management messages

A set of MAC management messages are defined. These messages shall be carried in the Payload of the MAC PDU. All MAC management messages begin with a Management Message Type field and may contain additional fields. MAC management messages on the basic, broadcast, and initial ranging connections shall be neither fragmented nor packed. MAC management messages on the primary management connection may be packed and/or fragmented. MAC management messages on the fragmentable broadcast connection may be fragmented. For the OFDM, and OFDMA PHYs, management messages carried on the initial ranging, broadcast, fragmentable broadcast, basic, and primary management connections shall have CRC usage enabled. The format of the management message is given in Figure 36. The encoding of the Management Message Type field is given in Table 38. MAC management messages shall not be carried on transport connections. MAC management messages that have a Type value specified in Table 38 as reserved, or those not containing all required parameters or containing erroneously encoded parameters, shall be silently discarded. In case of MAC management messages with multiple presentations of the same TLV and/or encoded parameter information, the last presentation shall be used, unless otherwise specified that multiple presentations are allowed (e.g., Downlink_Burst_Profile TLV in DCD message), in which case all presentations shall be used.

Management Message Type	Management Message Payload

Figure 36—MAC management message format

Table 38—MAC management messages

Type	Message name	Message description	Connection
0	UCD	UL channel descriptor	Fragmentable broadcast
1	DCD	DL channel descriptor	Fragmentable broadcast
2	DL-MAP	DL access definition	Broadcast
3	UL-MAP	UL access definition	Broadcast
4	RNG-REQ	Ranging request	Initial ranging or basic
5	RNG-RSP	Ranging response	Initial ranging or basic
6	REG-REQ	Registration request	Primary management
7	REG-RSP	Registration response	Primary management

Table 38—MAC management messages *(continued)*

Type	Message name	Message description	Connection
8	—	*Reserved*	—
9	PKM-REQ	Privacy key management request	Primary management
10	PKM-RSP	Privacy key management response	Primary management or broadcast[a]
11	DSA-REQ	Dynamic service addition request	Primary management
12	DSA-RSP	Dynamic service addition response	Primary management
13	DSA-ACK	Dynamic service addition acknowledge	Primary management
14	DSC-REQ	Dynamic service change request	Primary management
15	DSC-RSP	Dynamic service change response	Primary management
16	DSC-ACK	Dynamic service change acknowledge	Primary management
17	DSD-REQ	Dynamic service deletion request	Primary management
18	DSD-RSP	Dynamic service deletion response	Primary management
19	—	*Reserved*	—
20	—	*Reserved*	—
21	MCA-REQ	Multicast assignment request	Primary management
22	MCA-RSP	Multicast assignment response	Primary management
23	DBPC-REQ	DL burst profile change request	Basic
24	DBPC-RSP	DL burst profile change response	Basic
25	RES-CMD	Reset command	Basic
26	SBC-REQ	SS basic capability request	Basic
27	SBC-RSP	SS basic capability response	Basic
28	CLK-CMP	SS network clock comparison	Broadcast
29	DREG-CMD	De/Reregister command	Basic
30	DSX-RVD	DSx received message	Primary management
31	TFTP-CPLT	Config file TFTP complete message	Primary management
32	TFTP-RSP	Config file TFTP complete response	Primary management
33	ARQ-Feedback	Stand-alone ARQ feedback	Basic
34	ARQ-Discard	ARQ discard message	Basic
35	ARQ-Reset	ARQ reset message	Basic
36	REP-REQ	Channel measurement report request	Basic
37	REP-RSP	Channel measurement report response	Basic
38	FPC	Fast power control	Broadcast
39	*Reserved*	—	—
40	*Reserved*	—	—

Table 38—MAC management messages *(continued)*

Type	Message name	Message description	Connection
41	*Reserved*	—	—
42	*Reserved*	—	—
43	*Reserved*	—	—
44	AAS-FBCK-REQ	AAS feedback request	Basic
45	AAS-FBCK-RSP	AAS feedback response	Basic
46	AAS_Beam_Select	AAS beam select message	Basic
47	AAS_BEAM_REQ	AAS beam request message	Basic
48	AAS_BEAM_RSP	AAS beam response message	Basic
49	DREG-REQ	SS deregistration message	Basic
50	MOB_SLP-REQ	Sleep request message	Basic
51	MOB_SLP-RSP	Sleep response message	Basic or broadcast
52	MOB_TRF-IND	Traffic indication message	Broadcast
53	MOB_NBR-ADV	Neighbor advertisement message	Broadcast, Primary management
54	MOB_SCN-REQ	Scanning interval allocation request	Basic
55	MOB_SCN-RSP	Scanning interval allocation response	Basic
56	MOB_BSHO-REQ	BS HO request message	Basic
57	MOB_MSHO-REQ	MS HO request message	Basic
58	MOB_BSHO-RSP	BS HO response message	Basic
59	MOB_HO-IND	HO indication message	Basic
60	MOB_SCN-REP	Scanning result report message	Primary management
61	MOB_PAG-ADV	BS broadcast paging message	Broadcast
62	MBS_MAP	Multicast and broadcast service MAP message	—
63	PMC_REQ	Power control mode change request message	Basic
64	PMC_RSP	Power control mode change response message	Basic
65	PRC-LT-CTRL	Setup/Tear-down of long-term MIMO precoding	Basic
66	MOB_ASC-REP	Association result report message	Primary management
67	MOB_MIH-MSG	MIH Payload Transfer message	Primary management
68	SII-ADV	Service Identity Information Advertisement broadcast message	Fragmentable broadcast
69	LBS-ADV	Location information broadcast for LBS	Broadcast
70–255	—	*Reserved*	—

[a]For SSs and BSs that support PKMv2, PKM-RSP is sometimes transmitted on the broadcast connection.

In general, the PKM-RSP messages are carried on the Primary Management connection. However, the PKMv2 Group-Key-Update-Command message for the GTEK update mode shall be carried on the Broadcast connection.

During the adaptive antenna system (AAS) portion of the frame, the DL-MAP, UL-MAP, DCD, UCD, MOB_NBR-ADV, MOB_TRF-IND, MOB_PAG-ADV, and CLK-CMP messages may be sent using the Basic CID.

6.3.2.3.1 DCD (DL channel descriptor) message

A DCD shall be transmitted by the BS at a periodic interval (Table 554) to define the characteristics of a DL physical channel.

Table 39—DCD message format

Syntax	Size (bit)	Notes
DCD_Message_Format() {	—	—
Management Message Type = 1	8	—
Reserved	8	Shall be set to zero
Configuration Change Count	8	—
TLV Encoded information for the overall channel	*variable*	TLV-specific
Begin PHY-specific section {	—	See applicable PHY subclause
for (*i* = 1; *i* <= *n*; *i*++) {	—	For each DL burst profile 1 to *n*
Downlink_Burst_Profile	—	PHY-specific
}	—	—
}	—	—
}	—	—

A BS shall generate DCDs in the format shown in Table 39, including all of the following parameters:

Configuration Change Count
Incremented by one (modulo 256) by the BS whenever any of the values of this channel descriptor change, except for the frame number for the OFDM PHY and the Available DL Radio Resources. If the value of this count in a subsequent DCD remains the same, the SS can quickly decide that the remaining fields have not changed and may be able to disregard the remainder of the message. An SS performing initial network entry should decode the Available DL Radio Resources even if the DCD Configuration Change Count remains unchanged.

The following WirelessMAN-OFDM PHY-specific parameter shall be included in the DCD message:

Frame Duration Code
Frame Number

The message parameters following the Configuration Change Count shall be encoded in a TLV form (see 11.4). All channel encodings (see 11.4.1) shall appear first before the Downlink_Burst_Profile encodings.

The Downlink_Burst_Profile is a compound TLV encoding that defines, and associates with a particular DL interval usage code (DIUC), the PHY characteristics that shall be used with that DIUC. Within each Downlink_Burst_Profile shall be an unordered list of PHY attributes, encoded as TLV values (see 11.4.2). Each interval is assigned a DIUC by the DL-MAP message. A Downlink_Burst_Profile shall be included for each DIUC to be used in the DL-MAP unless the PHY's Downlink_Burst_Profile is explicitly known.

Downlink_Burst_Profile contents are defined separately for each PHY specification in Clause 8.

For OFDMA PHY, the DCD message (if such exists) shall always be transmitted on a DL burst described by a DL-MAP IE with DIUC=0 and DIUC = 0 shall have burst profile parameters that are the same as those used for transmission of the DL-MAP message.

6.3.2.3.2 DL-MAP (Downlink map) message

The DL-MAP message defines the access to the DL information. If the length of the DL-MAP message is a nonintegral number of bytes, the LEN field in the MAC header is rounded up to the next integral number of bytes. The message shall be padded to match this length, but the SS shall disregard the 4 pad bits.

Table 40—DL-MAP message format

Syntax	Size (bit)	Notes
DL-MAP_Message_Format() {	—	—
Management Message Type = 2	8	—
PHY Synchronization Field	*variable*	See appropriate PHY specification.
DCD Count	8	—
Base Station ID	48	—
Begin PHY-specific section {	—	See applicable PHY subclause.
if (WirelessMAN-OFDMA) {	—	—
No. OFDMA symbols	8	For TDD, the number of OFDMA symbols in the DL subframe including all AAS/permutation zone and including the preamble. For FDD, see 8.4.4.2.2.
}	—	—
for (*i* = 1; *i* <= *n*; *i*++) {	—	For each DL-MAP element 1 to *n*.
DL-MAP_IE()	*variable*	See corresponding PHY specification.
}	—	—
}	—	—
if !(byte boundary) {	—	—

Table 40—DL-MAP message format *(continued)*

Syntax	Size (bit)	Notes
Padding Nibble	4	Padding to reach byte boundary.
}	—	—
}	—	—

A BS shall generate DL-MAP messages in the format shown in Table 40, including all of the following parameters:

PHY Synchronization
The PHY synchronization field is dependent on the PHY specification used. The encoding of this field is given in each PHY specification separately.

DCD Count
Matches the value of the configuration change count of the DCD, which describes the DL burst profiles that apply to this map.

Base Station ID
The Base Station ID is a 48-bit long field identifying the BS. The least significant 24 bits of the Base Station ID shall be programmable. The most significant 24 bits shall be used as the Operator ID. This is a network management hook that can be sent with the DCD message for handling edge-of-sector and edge-of-cell situations. The 24-bit Operator ID shall be assigned as an IEEE 802.16 Operator ID by the IEEE Registration Authority.[13] The IEEE Registration Authority shall be the sole authorized number space administrator for this function.

The encoding of the remaining portions of the DL-MAP message is PHY-specification dependent and may be absent. Refer to the appropriate PHY specification.

The UL-MAP message (when present) shall be always transmitted in the first PDU on the burst described by the first DL-MAP IE of the DL-MAP (or, in the case of the OFDM PHY mode, of the DLFP).

The DL-MAP IEs in the DL-MAP shall be ordered in the increasing order of the transmission start time of the relevant PHY burst. The transmission start time is conveyed by the contents of the DL_MAP IE in a manner that is PHY dependant.

The logical order in which MAC PDUs are mapped to the PHY bursts in the DL is defined as the order of DL-MAP IEs in the DL-MAP message.

6.3.2.3.3 UCD (UL channel descriptor) message

A UCD shall be transmitted by the BS at a periodic interval (Table 554) to define the characteristics of an UL physical channel.

A BS shall generate UCDs in the format shown in Table 41, including all of the following parameters:

[13]The IEEE Registration Authority is a committee of the IEEE Standards Association Board of Governors. General information as well as details on the allocation of IEEE 802.16 Operator ID can be obtained at http://standards.ieee.org/regauth.

Configuration Change Count

Incremented by one (modulo 256) by the BS whenever any of the values of this channel descriptor change, except for the Available UL Radio Resources. If the value of this count in a subsequent UCD remains the same, the SS can quickly decide that the remaining fields have not changed and may be able to disregard the remainder of the message. An SS performing initial network entry should decode the Available UL Radio Resources even if the UCD Configuration Change Count remains unchanged. This value is also referenced from the UL-MAP messages.

Ranging Backoff Start

Initial backoff window size for initial ranging contention, expressed as a power of 2. Values of *n* range 0–15 (the highest order bits shall be unused and set to 0).

Ranging Backoff End

Final backoff window size for initial ranging contention, expressed as a power of 2. Values of *n* range 0–15 (the highest order bits shall be unused and set to 0).

Request Backoff Start

Initial backoff window size for contention BRs, expressed as a power of 2. Values of *n* range 0–15 (the highest order bits shall be unused and set to 0).

Request Backoff End

Final backoff window size for contention BRs, expressed as a power of 2. Values of *n* range 0–15 (the highest order bits shall be unused and set to 0).

Table 41—UCD message format

Syntax	Size (bit)	Notes
UCD_Message_Format() {	—	—
Management Message Type = 0	8	—
Configuration Change Count	8	—
Ranging Backoff Start	8	—
Ranging Backoff End	8	—
Request Backoff Start	8	—
Request Backoff End	8	—
TLV Encoded information for the overall channel	*variable*	TLV-specific.
Begin PHY-specific section {	—	See applicable PHY subclause.
for (*i* = 1; *i* <= *n*; *i*++) {	—	For each UL burst profile 1 to *n*.
Uplink_Burst_Profile	*variable*	PHY-specific.
}	—	—
}	—	—
}	—	—

To provide for flexibility, the remaining message parameters shall be encoded in a TLV form (see 11.3). All Channel encodings (see 11.3.1) shall appear first before the Uplink_Burst_Profile encodings.

The Uplink_Burst_Profile is a compound TLV encoding that defines, and associates with a particular UIUC, the PHY characteristics that shall be used with that UIUC. Within each Uplink_Burst_Profile shall be an unordered list of PHY attributes, encoded as TLV values (see 11.3.1.1 for an example applicable to the 10–66 GHz PHY specification). Each interval is assigned a UIUC by the UL-MAP message. An Uplink_Burst_Profile shall be included for each UIUC to be used in the UL-MAP.

Uplink_Burst_Profile contents are defined separately for each PHY specification in Clause 8.

6.3.2.3.4 UL-MAP (UL map) message

The UL-MAP message allocates access to the UL channel. The UL-MAP message shall be as shown in Table 42.

The BS shall generate the UL-MAP with the following parameters:

UCD Count
Matches the value of the Configuration Change Count of the UCD, which describes the UL burst profiles that apply to this map.

Allocation Start Time
Effective start time of the UL allocation defined by the UL-MAP (units are PHY-specific, see 10.3).

Map IEs
The contents of a UL-MAP IE is PHY-specification dependent.

IEs define UL bandwidth allocations. Each UL-MAP message (except when the PHY is an OFDMA PHY) shall contain at least one information element (IE) that marks the end of the last allocated burst. Ordering of IEs carried by the UL-MAP is PHY-specific.

The CID represents the assignment of the IE to either a unicast, multicast, or broadcast address. When specifically addressed to allocate a bandwidth grant, the CID shall be the Basic CID of the SS. A UIUC shall be used to define the type of UL access and the UL burst profile associated with that access. An Uplink_Burst_Profile shall be included in the UCD for each UIUC to be used in the UL-MAP.

For SC, and OFDMA PHYs, the UL-MAP message (if such exists) shall always be transmitted on the burst described by the first DL-MAP IE (and following the HARQ MAP Pointer IE, if such exists in the OFDMA PHY) of the DL-MAP message. If there are multiple PDUs in the burst described by the first DL-MAP IE, the UL-MAP message shall be the first one.

The logical order in which MAC PDUs are mapped to the PHY bursts in the UL is defined as the order of UL-MAP IEs in the UL-MAP message.

Table 42—UL-MAP message format

Syntax	Size (bit)	Notes
UL-MAP_Message_Format() {	—	—
Management Message Type = 3	8	—
FDD Partition Change Flag	1	For FDD only. Indicates the next possible partition change. 0b0:Possible partition change in next frame 0b1:Minimum number of frames (excluding current frame) before next possible change is given by TLV 'FDD frame partition change timer'
Reserved	7	Shall be set to zero.
UCD Count	8	—
Allocation Start Time	32	—
Begin PHY-specific section {	—	See applicable PHY subclause.
if (WirelessMAN-OFDMA) {	—	—
No. OFDMA symbols	8	For TDD, the number of OFDMA symbols in the UL subframe For FDD, see 8.4.4.2.2
}	—	—
for (i = 1; i <= n; i++) {	—	For each UL-MAP element 1 to n.
UL-MAP_IE()	*variable*	See corresponding PHY specification.
}	—	—
}	—	—
if !(byte boundary) {	—	—
Padding Nibble	4	Padding to reach byte boundary.
}	—	—
}	—	—

6.3.2.3.5 RNG-REQ (ranging request) message

An RNG-REQ shall be transmitted by the SS at initialization and periodically to determine network delay and to request power and/or DL burst profile change. The format of the RNG-REQ message is shown in Table 43. The RNG-REQ message may be sent in initial ranging and data grant intervals.

Table 43—RNG-REQ message format

Syntax	Size (bit)	Notes
RNG-REQ_Message_Format() {	—	—
Management Message Type = 4	8	—
Reserved	8	Shall be set to zero
TLV Encoded Information	*variable*	TLV-specific
}	—	—

The CID field in the MAC header shall assume the following values when sent in an initial ranging interval:

a) Initial Ranging CID if the SS is attempting to join the network.
b) Initial Ranging CID if the SS has not yet registered and is changing DL (or both DL and UL) channels.
c) In all other cases, the Basic CID is used as soon as one is assigned in the RNG-RSP message.

If sent in a data grant interval, the CID is always equal to the Basic CID.

An SS shall generate RNG-REQ messages in the format shown in Table 43.

All parameters are coded as TLV tuples as defined in 11.5.

TLV message elements shall only be included in RNG-REQ messages of adequate UL bandwidth. In OFDMA, when the MS transmits the HO CDMA ranging code, the BS shall provide for initial UL bandwidth allocation of size at least sufficient for transmission of RNG-REQ message with MS MAC address TLV and GMSH. If required TLV message elements cannot be accommodated in the UL bandwidth of a current RNG-REQ message, after the MS obtains a Basic CID from the BS, the MS shall make UL BR of sufficient size to conduct additional RNG-REQ including all required message elements, at the first available opportunity.

The following parameters shall be included in the RNG-REQ message when the SS is attempting initial entry to the network:

Requested Downlink Burst Profile
SS MAC Address

The following parameters shall be included in the RNG-REQ message when transmitted during SS initial entry to the network. The parameter shall be sent on the SS's basic connection or for OFDMA on the following initial ranging connection:

MAC Version (11.1.3)

The following parameters may be included in the RNG-REQ message after the SS has received a RNG-RSP addressed to the SS:

Requested Downlink Burst Profile
Ranging Anomalies

The following parameter may be included in the RNG-REQ message:

AAS broadcast capability

The following parameter may be included in the RNG-REQ message when the MS is attempting to perform reentry, association, or HO:

Requested Downlink Burst Profile

The following parameter shall be included in the RNG-REQ message when the MS is attempting to perform reentry, association, or HO:

Serving BSID
The BSID of the BS to which the MS is currently connected (has completed the registration cycle and is in normal operation). The serving BSID shall not be included if the aging timer is timed-out (serving BSID AGINGTIMER; see Table 554). Inclusion of serving BSID in the RNG-REQ message signals to the target BS that the MS is currently connected to the network through the serving BS and is performing association or is in the process of HO network reentry.

The following TLV parameter shall be included in the RNG-REQ message when the MS is attempting to perform reentry, HO, or location update:

Ranging Purpose Indication
The presence of this item in the message indicates the following MS action:

If Bit 0 is set to 1, in combination with a serving BSID, it indicates that the MS is currently attempting to HO or reentry; or, in combination with a Paging Controller ID, indicates that the MS is attempting network reentry from idle mode to the BS.
If Bit 1 is set to 1, it indicates that the MS is initiating the idle mode location update process.
Bit 2: Seamless HO indication. When this bit is set to 1 in combination with other included information elements, it indicates the MS is initiating ranging as part of seamless HO procedure.
Bit 3: Ranging Request for Emergency Call Setup. When this bit is set to 1, it indicates MS action of Emergency Call Process.
Bit 4: MBS update. When this bit is set to 1, the MS is currently attempting to perform location update due to a need to update service flow management encodings for MBS flows.
Bits 5–7: *Reserved*

The following TLV parameter shall be included in the RNG-REQ message when the MS is attempting to perform reentry or location update:

Paging Controller ID (see 11.1.8.2)
The Paging Controller ID is a logical network identifier for the serving BS or other network entity retaining MS service and operational information and/or administering paging activity for the MS while in idle mode.

The following TLV parameter shall be included in the RNG-REQ message when the MS in Idle Mode is attempting to change Paging Cycle during Location Update:

Paging Cycle Change (see 11.5)
PAGING_CYCLE requested by the MS

The following TLV parameter may be included in RNG-REQ message when an MS is performing initial ranging to the selected target BS:

HO_ID
Optional ID assigned for use in initial ranging to the target BS during HO once the BS is selected as the target BS (see 6.3.21.2.7).

The following parameter may be included in the RNG-REQ message when the MS is attempting to perform reentry, association, or HO:

MS MAC Address
MS MAC Address shall be included if HO_ID is omitted.

The following TLV parameter may be included in the RNG-REQ message when MS is attempting to perform location update:

MAC Hash Skip Threshold (see 11.1.8.1)
Maximum number of successive MOB_PAG-ADV messages that may be sent from a BS without individual notification for an MS, including MAC address hash of an MS for which the action code is 00 (No Action Required).

The following TLV parameter shall be included in the RNG-REQ message when the MS is attempting to perform location update due to power down:

Power Down Indicator
Indicates the MS is currently attempting to perform location update due to power down.

The following parameters may be included in RNG-REQ message when the MS is attempting to perform HO and needs to inform target BS of its preference to define Power Saving Class during HO to target BS.

Power_Saving_Class_Parameters
Compound TLV to specify power saving class operation.

The following TLV shall be included whenever the CMAC tuple is included in the RNG-REQ message during re-entry, secure Location Update or handover.

CMAC_KEY_COUNT
This field contains the MSs current value of the CMAC_KEY_COUNT, which is used to generate the CMAC_KEY_U used to generate the CMAC Tuple included in this message. See 7.2.2.2.9.

The following parameter shall be included in the RNG-REQ message when the MS is attempting to perform Network Re-Entry from idle mode, Keep-Alive check in sleep mode, Secure Location Update, or HO and the MS has a hashed message authentication code (HMAC)/cipher-based message authentication code (CMAC) tuple necessary to expedite security authentication.

HMAC/CMAC Tuple (see 11.1.2)
The HMAC/CMAC Tuple shall be the last attribute in the message.

6.3.2.3.6 RNG-RSP (ranging response) message

A RNG-RSP shall be transmitted by the BS in response to a received RNG-REQ. In addition, it may also be transmitted asynchronously to send corrections based on measurements that have been made on other received data or MAC messages. As a result, the SS shall be prepared to receive a RNG-RSP at any time, not just following a RNG-REQ transmission. The format of the RNG-REQ message is shown in Table 44.

To provide for flexibility, the message parameters following the Uplink Channel ID shall be encoded in a TLV form.

All other parameters are coded as TLV tuples, as defined in 11.6.

Table 44—RNG-RSP message format

Syntax	Size (bit)	Notes
RNG-RSP_Message_Format() {	—	—
Management Message Type = 5	8	—
Reserved	8	Shall be set to zero.
TLV Encoded Information	*variable*	TLV-specific
}	—	—

The following parameters shall be included in the RNG-RSP message:

Ranging Status

The following parameters may be included in the RNG-RSP message:

Timing Adjust Information
If this field is not included, no adjustment shall be made

Power Adjust Information
If this field is not included, no adjustment shall be made

Downlink Frequency Override
Uplink Channel ID Override
Downlink Operational Burst Profile
Basic CID
A required parameter if the RNG-RSP message is being sent on the Initial Ranging CID in response to a RNG-REQ message that was sent on the Initial Ranging CID.

Primary Management CID
A required parameter if the RNG-RSP message is being sent on the Initial Ranging CID in response to a RNG-REQ message that was sent on the Initial Ranging CID.

SS MAC Address (48-bit)
A required parameter when the CID in the MAC header is the Initial Ranging CID.

Frequency Adjust Information
AAS Broadcast Permission
Preamble Index Override
Preamble Indices of new target BS(s) where the MS should redo ranging. If the TLV includes two or more Preamble Indices, the first one in the list is the most preferable and the second is the next preferable. When the TLV is used with Downlink frequency override TLV, the MS should redo ranging on the new DL channel identified by the Preamble Indices.

Ranging Abort Timer
Timer defined by a BS to prohibit the MS from attempting network entry at this BS, for a specific time duration.

The following WirelessMAN-OFDM PHY-specific parameters may also be included in the RNG-RSP message:

Frame Number
Frame number in which the corresponding RNG-REQ message or subchannelized initial ranging indication (for OFDM) was received. When Frame Number is included, SS MAC Address shall not appear in the same message.

Initial Ranging Opportunity Number
Initial ranging opportunity within the frame in which the corresponding RNG-REQ message or subchannelized initial ranging indication (for OFDM) was received. If not provided, and Frame Number is included in the message, initial ranging opportunity is assumed to be one.

The following WirelessMAN-OFDM PHY-specific parameter may also be included in the RNG-RSP message:

Ranging Subchannel
The OFDM ranging subchannel index that was used to transmit the initial ranging message.

The following WirelessMAN-OFDMA PHY-specific parameters shall be included in the RNG-RSP message when an initial or periodic ranging message based on code division multiple access (CDMA) is received, in which case the RNG-RSP shall use the Initial Ranging CID.

Ranging code attributes
Indicates the OFDMA time symbols reference, subchannel reference, and frame number used to transmit the ranging code, and the ranging code index that was sent by the SS.

The RNG-RSP is directed to the SS if it is sent on the Basic CID of the SS or if the RNG-RSP contains the MAC address of the SS, or, in the case of OFDMA, if the RNG-RSP contains CDMA-code parameters specifying the code sent by the SS.

When a BS sends a RNG-RSP message in response to a RNG-REQ message containing serving BSID, the BS may include the TLV parameter Service Level Prediction in the RNG-RSP message.

The service level prediction value indicates the level of service the MS can expect from this BS. The following encodings apply:

0 = No service possible for this MS.
1 = Some service is available for one or several service flows authorized for the MS.
2 = For each authorized service flow, a MAC connection can be established with QoS specified by the AuthorizedQoSParamSet.
3 = No service level prediction available.

A Service Level Prediction may be accompanied by a number of service flow encodings as specified in 11.13 sufficient to uniquely identify the AuthorizedQoSParamSet associated with the Service Level Prediction. If service flow encodings are included, then the Service Level Prediction response is specific to the presented AuthorizedQoSParamSet defined by the associated encodings. Included service flow encodings are restricted to the following parameters only:

— Global service class name.
— Service flow QoS parameter set encodings as defined in 11.13 so that the combination of global service class name and any service flow modifying parameters fully defines an AuthorizedQoSParamSet profile being assessed.
— Service flow identifier (SFID).

If individual AuthorizedQoSParamSet profiles are provided for multiple Service Level Predictions, then each Service Level Prediction is specific to its associated AuthorizedQoSParamSet profile and shall include only response options 0 or 2.

When a BS sends a RNG-RSP message in response to a RNG-REQ message containing Paging Controller ID or a Power Down Indicator, the BS shall include the following TLV parameter in the RNG-RSP message:

Location Update Response
Response to idle mode location update request (refer to Table 585)

The following TLV shall be included only if the Location Update Response is set to 0x00 (Success of Idle Mode Location Update) and the Paging Information has changed.

Paging Information (see 11.1.8.3)
New Paging Information assigned to MS.

The following TLV shall be included only if the Location Update Response = 0x00 (Success of Idle Mode Location Update) and if Paging Controller ID has changed.

Paging Controller ID (see 11.1.8.2)
Paging Controller ID is a logical network identifier for the serving BS or other network entity retaining MS service and operational information and/or administering paging activity for the MS while in idle mode.

The following TLV parameter shall be included in the RNG-RSP message when the MS is attempting to perform network reentry or HO and the target BS wishes to identify reentry process management messages that may be omitted during the current HO attempt:

HO Process Optimization
Identifies reentry process management messages that may be omitted during the current HO attempt due to the availability of MS service and operational context information obtained by means that are beyond the scope of this standard, and the MS service and operational status post-HO completion. The target BS may elect to use MS service and operational information obtained over the backbone network to build and send unsolicited SBC-RSP and/or REG-RSP management messages to update MS operational information. The MS shall not enter normal operation with target BS until completing receiving all network reentry, MAC management message responses as indicated in HO process optimization.

The following parameter may be included in RNG-RSP message transmitted in response to RNG-REQ message containing MAC Hash Skip Threshold:

MAC Hash Skip Threshold
Maximum number of successive MOB_PAG-ADV messages that may be sent from a BS without individual notification for an MS, including MAC address hash of an MS for which the action code for the MS is 00 (No Action Required).

The following TLV parameter shall be included in the RNG-RSP message when the periodic ranging in sleep operation completes and the serving BS decides to assign a new SLPID for the MS:

SLPID_Update (see 11.1.7.2)
The SLPID_Update is a compound TLV value that provides a shorthand method for changing the SLPID used by the MS during sleep mode operation. The SLPID_Update TLV specifies new SLPID replacing old SLPID.

The following parameter may be included in RNG-RSP message by the BS to define and/or activate/deactivate power saving class of type I, type II and type III. In case of HO, those TLVs are used only to define the Power Saving Class.

Power_Saving_Class_Parameters (see Table 585)
Unified TLV encoding for Power Saving Class Parameters (see Table 585).

The following TLV parameter may be included in RNG-RSP message transmitted the BS permits an activation of power saving class. This TLV indicates the enabled action that MS performs upon reaching trigger condition in sleep mode.

Enabled-Action-Triggered
Indicates possible action upon reaching trigger condition

The following TLV parameter shall be included in the RNG-RSP message when a BS sends RNG-RSP message as a reply to the RNG-REQ message from an MS which is performing initial ranging during HO and for which the BS has a current HO ID value:

HO_ID
Optional ID assigned for use in initial ranging to the target BS once this BS is selected as the target BS (see 11.5).

The following TLV parameter shall be included for the BS to notify the MS of known future next periodic ranging for the MS with its serving BS:

Next Periodic Ranging
Indicates the Frame Offset for the next periodic ranging opportunity. This value shall be set to zero to indicate that there has been DL traffic addressed to the MS.

The following parameter, necessary to expedite security authentication, shall be included in the RNG-RSP message when the BS notifies the MS through the HO Process Optimization TLV that the PKM-REQ/RSP sequence may be omitted for the current HO reentry attempt, or when the BS wishes to acknowledge a valid HMAC/CMAC Tuple in the acknowledged RNG-REQ management message:

HMAC/CMAC Tuple (see 11.1.2)
The HMAC/CMAC Tuple shall be the last attribute in the message.

The following TLV parameters may be included in an unsolicited RNG-RSP message:

Rendezvous time
This is the offset, measured in units of frame duration, when the BS is expected to provide a non-contention-based ranging opportunity for the MS. The offset is calculated from the frame where RNG-RSP message is transmitted. The BS is expected to provide the non-contention-based ranging opportunity at the frame specified by the rendezvous time parameter.

CDMA code
A unique code assigned to the MS, to be used for dedicated ranging. The code is from the initial ranging codeset.

Transmission Opportunity Offset
A unique transmission opportunity assigned to the MS, to be used for dedicated ranging, in units of symbol duration.

6.3.2.3.7 REG-REQ (registration request) message

An REG-REQ shall be transmitted by an SS at initialization. An SS shall generate REG-REQs in the form shown in Table 45.

Table 45—REG-REQ message format

Syntax	Size (bit)	Notes
REG-REQ_Message_Format() {	—	—
Management Message Type = 6	8	—
TLV Encoded Information	*variable*	TLV-specific
}	—	—

An SS shall generate REG-REQs including the following parameters if authentication is supported:

Primary Management CID *(in the generic MAC header)*
The connection identifier in the generic MAC header is the Primary Management CID for this SS, as assigned in the RNG-RSP message.

All other parameters are coded as TLV tuples.

The REG-REQ shall contain the following TLVs:

Hashed Message Authentication Code (HMAC)/CMAC Tuple
Shall be the final attribute in the message's TLV attribute list (11.1.2.1).

For PMP operation, the REG-REQ shall contain the following TLVs:

CID Support (11.7.6)

For PMP operation with OFDMA the REG-REQ may contain the following TLVs:

SS management support (11.7.2)
IP management mode (11.7.3)

For PMP operation with OFDM the REG-REQ shall contain the following TLVs:

SS management support (11.7.2)
IP management mode (11.7.3)

The REG-REQ may contain the following TLVs:

IP version (11.7.4)
SS capabilities encodings (11.7.8)
Vendor ID encoding (11.1.5)
Vendor-specific information (11.1.6)
Convergence Sublayer capabilities (11.7.7)
ARQ Parameters (11.7.1)
ARQ and fragmentation parameters desired by the SS for establishing the secondary management connection. When the TLV is not supplied, the SS is indicating its desire to not support ARQ on the connection. For purposes of the parameter negotiation dialog, the parameters supplied in this message are equivalent to those supplied in the DSA-REQ message.

For an MS supporting HO, the REG-REQ (on initial network entry) shall contain the following TLVs:

Handover supported field (11.7.12.5)
Mobility parameters support (11.7.13)

For an MS supporting HO, the REG-REQ (on initial network entry) shall contain the following TLV:

HO Process Optimization MS Timer (11.7.12.2)

The REG-REQ may contain the following TLV:

MAC header and extended subheader support (11.7.21)
BS switching timer (11.7.12.7)
Extended capability (11.7.8.11)

The following TLV may be added if the MS supports H-FDD:

H-FDD sleep capabilities (11.7.8.10)

6.3.2.3.8 REG-RSP (registration response) message

A REG-RSP shall be transmitted by the BS in response to received REG-REQ.

To provide for flexibility, the message parameters following the response field shall be encoded in a TLV format.

A BS shall generate REG-RSPs in the form shown in Table 46, including both of the following parameters:

CID *(in the generic MAC header)*
The connection identifier in the generic MAC header is the Primary Management CID for this SS.

Response
A 1 byte quantity with one of the two values:
0 = OK
1 = Message authentication failure

Table 46—REG-RSP message format

Syntax	Size (bit)	Notes
REG-RSP_Message_Format() {	—	—
Management Message Type = 7	8	—
Response	8	—
TLV Encoded Information	*variable*	TLV-specific
}	—	—

For the OFDM PHY, the REG-RSP shall contain the following TLVs:

SS management support (11.7.2)
Response to REG-REQ indicating the mode of SS management operation.

Secondary Management CID (11.7.5)
Present only if the SS has indicated in the REG-REQ that it is a managed SS.

When the Secondary Management CID is present, the following UL QoS parameters may be also included in the message:

Traffic Priority (11.13.5)
Maximum Sustained Traffic Rate (11.13.6)
Minimum Reserved Traffic Rate (11.13.8)
Maximum Latency (11.13.13)

IP management mode (11.7.3)
Response to REG-REQ indication of whether the requester wishes to accept IP-based traffic on the secondary management connection, once the initialization process has completed.

The REG-RSP shall contain the following TLV if authentication is supported:

HMAC/CMAC Tuple (11.1.2.1)
The HMAC/CMAC Tuple attribute shall be the final attribute in the message's TLV attribute list.

The REG-RSP may contain the following TLVs:

SS capabilities encodings (11.7.8)

Response to the capabilities of the requester provided in the REG-REQ. Included in the response if the request included capabilities information. The response indicates whether the capabilities may be used. If a capability is not recognized, the response indicates that this capability shall not be used by the requester. Capabilities returned in the REG-RSP shall not be set to require greater capability of the requester than is indicated in the REG-REQ.

IP Version (11.7.4)
Vendor ID Encoding (of the responder; 11.1.5)
Vendor-specific information (11.1.6)

Included if the RNG-REQ contained the Vendor ID Encoding of the requestor.

Convergence Sublayer capabilities (11.7.7)

Response to the capabilities of the requester provided in the REG-REQ. Included in the response if the request included Convergence Sublayer Capabilities information. The response indicates whether the capabilities may be used. If a capability is not recognized, the response indicates that this capability shall not be used by the requester. Capabilities returned in the REG-RSP shall not be set to require greater capability of the requester than is indicated in the REG-REQ.

ARQ Parameters (11.7.1)

ARQ and fragmentation parameters specified by the BS to complete ARQ parameter negotiation for the secondary management connection. This information is only included in the message if ARQ parameters where supplied by the SS in the original REG-REQ message. For purposes of the parameter negotiation dialog, the parameters supplied in this message are equivalent to those supplied in the DSA-RSP message.

For mobile stations, when the information is available to create the CID update TLV, the target BS shall include the CID_update and SAID_update TLVs in the REG-RSP for an MS recognized by the target BS as performing HO, network reentry from idle mode or location update for MBS update. The BS may include the Compressed CID Update TLV instead of the CID_update TLV in REG-RSP message if the CID update procedure is required. The target BS recognizes an MS performing location update for MBS update by the presence of a Paging Controller ID and Ranging Purpose Indication with Bit 4 set to 1 in the RNG-REQ message.

CID_update

The CID_update is a compound TLV value that provides a shorthand method for replacing the active connections used by the MS in its previous serving BS. Each CID_update TLV specifies a CID in the target BS that shall replace a CID used in the previous serving BS. Multiple instances of CID_update may occur in the REG-RSP to facilitate recreating and reassigning admitted or active service flows for the MS from its previous serving BS. If any of the service flow parameters change, then those service flow parameter encoding TLVs that have changed will be added. If the BS cannot reestablish a particular service flow, it shall not include an instance of CID_update for that service flow.

These TLVs enable the target BS to renew connections used in the previous serving BS, but with different service flow management encodings settings.

Compressed CID_update

The Compressed CID_update TLV also provides a method for replacing the active connections used by the MS in its previous serving BS as CID update TLV. It can diminish the length of REG-RSP message.

SAID_update

The SAID_update is a compound TLV value that provides a shorthand method for renewing active SAs used by the MS in its previous serving BS. The TLVs specify SAID in the target BS that shall replace active SAID used in the previous serving BS. Multiple iterations of these TLVs may occur in the REG-RSP suitable to recreating and reassigning all active Security Associations for the MS from its previous serving BS including Primary, Dynamic and Static SAIDs. If any of the Security Associations parameters change, then those Security Associations parameters encoding TLVs that have changed will be added.

When a BS has Provisioned service flows to transmit to an MS, the BS shall include the following:

Total number of provisioned service flow TLV (11.7.18)

The REG-RSP may contain the following TLV:

MAC header and extended subheader support (11.7.21)
Handover Indication Readiness Timer (11.7.12.6)
Extended capability (11.7.8.11)

For an MS supporting HO, the REG-RSP (on initial network entry) shall contain the following TLVs:

Handover supported field (11.7.12.5)
System Resource_Retain_Time (11.7.12.1)
Mobility parameters support (11.7.13)

For an MS supporting HO, the REG-RSP on initial network entry shall contain the following TLVs:

HO Process Optimization MS Timer (11.7.12.2)
MS Handover Retransmission Timer (11.7.12.3)
Handover Indication Readiness Timer (11.7.12.6)

The following TLV may be added if the MS supports H-FDD:

H-FDD sleep capabilities (11.7.8.10)

6.3.2.3.9 Privacy key management (PKM) messages (PKM-REQ/PKM-RSP)

PKM employs two MAC message types: PKM-REQ (PKM request) and PKM-RSP (PKM response), as described in Table 47.

Table 47—PKM MAC messages

Type value	Message name	Message description
9	PKM-REQ	Privacy key management request [SS -> BS]
10	PKM-RSP	Privacy key management response [BS -> SS]

These MAC management message types distinguish between PKM requests (SS-to-BS) and PKM responses (BS-to-SS). Each message encapsulates one PKM message in the management message payload.

PKM protocol messages transmitted from the SS to the BS shall use the form shown in Table 48. They are transmitted on the SSs primary management connection.

Table 48—PKM-REQ message format

Syntax	Size (bit)	Notes
PKM-REQ_Message_Format() {	—	—
Management Message Type = 9	8	—
Code	8	—
PKM Identifier	8	—
TLV Encoded Attributes	*variable*	TLV-specific
}	—	—

PKM protocol messages transmitted from the BS to the SS shall use the form shown in Table 49. They are transmitted on the SS's primary management connection. However, the PKMv2 Group-Key-Update-Command message for the GTEK update mode shall be carried on the Broadcast connection.

Table 49—PKM-RSP message format

Syntax	Size (bit)	Notes
PKM-RSP_Message_Format() {	—	—
Management Message Type = 10	8	—
Code	8	—
PKM Identifier	8	—
TLV Encoded Attributes	*variable*	TLV-specific
}	—	—

The parameters shall be as follows:

Code

The Code field is one byte and identifies the type of PKM packet. When a packet is received with an invalid code, it shall be silently discarded. The code values are defined in Table 50.

PKM Identifier

The Identifier field is one byte. An SS uses the ID to match a BS response to the SS requests. In the case of a 3-way SA-TEK procedure, however, a BS uses it to match an SS response to the BS challenges.

The SS shall increment (modulo 256) the Identifier field whenever it issues a new PKM message. In PKMv1, a "new" message is an Authorization Request or Key Request that is not a retransmission being sent in response to a Timeout event. In PKMv2, a PKMv2 RSA-Request,

PKMv2 SA-TEK-Challenge, or PKMv2 Key-Request message is a "new" message. For retransmissions, the Identifier field shall remain unchanged.

The Identifier field in PKMv2 EAP-Transfer messages and Authentication Information messages, which is redundant and does not affect any response messaging, shall be set to zero. The Identifier field in a BS's PKM-RSP message shall match the Identifier field of the PKM-REQ message the BS is responding to. The Identifier field in TEK Invalid messages and PKMv2 TEK Invalid messages, which are not sent in response to PKM-REQs, shall be set to zero. The Identifier field in unsolicited Authorization Invalid messages shall be set to zero. The Identifier field in PKMv2 Group-Key-Update-Command messages, which are used to distribute the updated group traffic encryption key (GTEK) and traffic keying material, shall be set to zero.

On reception of a PKM-RSP message, the SS associates the message with a particular state machine (the Authorization state machine in the case of Authorization Replies, Authorization Rejects, and Authorization Invalids for the PKMv1, PKMv2 RSA Reply, PKMv2 RSA Reject, PKMv2 EAP Transfer, PKMv2 SA-TEK-Challenge, PKMv2 SA-TEK-Response for the PKMv2; a particular TEK state machine in the case of Key Replies, Key Rejects, and TEK Invalids the PKMv1, PKMv2-Key-Reply, PKMv2-Key-Reject, PKMv2 TEK-Invalids, and PKMv2 Group-Key-Update-Command messages for the PKMv2).

In PKMv1, an SS shall keep track of its latest ID.

An SS shall keep track of the ID of its latest, pending Authorization Request. The SS shall discard Authorization Reply and Authorization Reject messages with Identifier fields not matching that of the pending Authorization Request.

An SS shall keep track of the IDs of its latest, pending Key Request for each SA. The SS shall discard Key Reply and Key Reject messages with Identifier fields not matching those of the pending Key Request messages.

In PKMv2, both an SS and a BS shall keep track of their latest ID.

An SS shall keep track of the ID of its latest, pending PKMv2 RSA-Request. The SS shall discard PKMv2 RSA-Reply and PKMv2 RSA-Reject messages with Identifier fields not matching that of the pending PKMv2 RSA-Request. Moreover, a BS shall keep it, pending PKMv2 RSA-Reply. The BS shall discard PKMv2 RSA-Acknowledgement messages with Identifier fields not matching that of the pending PKMv2 RSA-Reply.

A BS shall keep track of the ID of its latest, pending PKMv2 SA-TEK-Challenge. The BS shall discard PKMv2 SA-TEK-Request messages with Identifier fields not matching that of the pending PKMv2 SA-TEK-Challenge. In addition, an SS shall keep it, pending PKMv2 SA-TEK-Request. The SS shall discard PKMv2 SA-TEK-Reply messages with Identifier fields not matching that of the pending PKMv2 SA-TEK-Request.

An SS shall keep track of the ID of its latest, pending PKMv2 Key-Request. The SS shall discard PKMv2 Key-Reply and PKMv2 Key-Reject messages with Identifier fields not matching that of the pending PKMv2 Key-Request.

Attributes

PKM attributes carry the specific authentication, authorization, and key management data exchanged between client and server. Each PKM packet type has its own set of required and optional attributes. Unless explicitly stated, there are no requirements on the ordering of attributes within a PKM message. The end of the list of attributes is indicated by the LEN field of the MAC PDU header.

Table 50—PKM message codes

Code	PKM message type	MAC management message name
0–2	*Reserved*	—
3	SA Add	PKM-RSP
4	Auth Request	PKM-REQ
5	Auth Reply	PKM-RSP
6	Auth Reject	PKM-RSP
7	Key Request	PKM-REQ
8	Key Reply	PKM-RSP
9	Key Reject	PKM-RSP
10	Auth Invalid	PKM-RSP
11	TEK Invalid	PKM-RSP
12	Auth Info	PKM-REQ
13	PKMv2 RSA-Request	PKM-REQ
14	PKMv2 RSA-Reply	PKM-RSP
15	PKMv2 RSA-Reject	PKM-RSP
16	PKMv2 RSA-Acknowledgement	PKM-REQ
17	PKMv2 EAP-Start	PKM-REQ
18	PKMv2 EAP-Transfer	PKM-REQ/PKM-RSP
19	*Reserved*	—
20	PKMv2 SA-TEK-Challenge	PKM-RSP
21	PKMv2 SA-TEK-Request	PKM-REQ
22	PKMv2 SA-TEK-Response	PKM-RSP
23	PKMv2 Key-Request	PKM-REQ
24	PKMv2 Key-Reply	PKM-RSP
25	PKMv2 Key-Reject	PKM-RSP
26	PKMv2 SA-Addition	PKM-RSP
27	PKMv2 TEK-Invalid	PKM-RSP
28	PKMv2 Group-Key-Update-Command	PKM-RSP
29	*Reserved*	PKM-RSP
30	*Reserved*	—
31	MIH Initial Request	PKM-REQ
32	MIH Acknowledge	PKM-RSP

Table 50—PKM message codes *(continued)*

Code	PKM message type	MAC management message name
33	MIH Comeback Response	PKM-RSP
34–255	*Reserved*	—

Auth Invalid and Auth Info messages may be used in PKMv1 and PKMv2.

Formats for each of the PKM messages are described in the following subclauses. The descriptions list the PKM attributes contained within each PKM message type. The attributes themselves are described in 11.9. Unknown attributes shall be ignored on receipt and skipped over while scanning for recognized attributes.

The BS shall silently discard all requests that do not contain ALL required attributes. The SS shall silently discard all responses that do not contain ALL required attributes.

6.3.2.3.9.1 SA Add message

The SA Add message is sent by the BS to the SS to establish one or more additional SAs.

Code: 3

Attributes are shown in Table 51.

Table 51—SA Add message attributes

Attribute	Contents
Key-Sequence-Number	Authorization key (AK) sequence number.
(one or more) SA-Descriptor(s)	Each compound SA-Descriptor attribute specifies an SA identifier (SAID) and additional properties of the SA.
HMAC-Digest	Keyed secure hash algorithm (SHA) message.

The HMAC-Digest attribute shall be the final attribute in the message's attribute list.

6.3.2.3.9.2 Auth Request (authorization request) message

Code: 4

Attributes are shown in Table 52.

Table 52—Auth Request message attributes

Attribute	Contents
SS-Certificate	Contains the SS's X.509 user certificate.
Security-Capabilities	Describes requesting SS's security capabilities.
SAID	SS's Primary SAID equal to the Basic CID.

The SS-Certificate attribute contains an X.509 SS certificate (see 7.6) issued by the SS's manufacturer. The SS's X.509 certificate is a public-key certificate that binds the SS's identifying information to its RSA public key in a verifiable manner. The X.509 certificate is digitally signed by the SS's manufacturer, and that signature can be verified by a BS that knows the manufacturer's public key. The manufacturer's public key is placed in an X.509 certification authority (CA) certificate, which in turn is signed by a higher level CA.

The Security-Capabilities attribute is a compound attribute describing the requesting SS's security capabilities. This includes the data encryption and data authentication algorithms the SS supports.

An SAID attribute contains a Primary SAID. In this case, the provided SAID is the SS's Basic CID, which is equal to the Basic CID assigned to the SS during initial ranging.

6.3.2.3.9.3 Auth Reply (authorization reply) message

Sent by the BS to a client SS in response to an Auth Request message, the Auth Reply message contains an AK, the key's lifetime, the key's sequence number, and a list of SA-Descriptors identifying the Primary and Static SAs that the requesting SS is authorized to access and their particular properties (e.g., type, cryptographic suite). The AK shall be encrypted with the SS's public key. The SA-Descriptor list shall include a descriptor for the Basic CID reported to the BS in the corresponding Auth Request message. The SA-Descriptor list may include descriptors of Static SAIDs that the SS is authorized to access.

The Auth Reply message may also contain PKM configuration settings that override the default timer values.

Code: 5

Attributes are shown in Table 53.

Table 53—Auth Reply message attributes

Attribute	Contents
AUTH-Key	AK, encrypted with the target client SS's public key.
Key-Lifetime	AK's active lifetime.

Table 53—Auth Reply message attributes *(continued)*

Attribute	Contents
Key-Sequence-Number	AK sequence number.
(one or more) SA-Descriptor(s)	Each compound SA-Descriptor attribute specifies a SAID and additional properties of the SA.
PKM Configuration settings (optional)	PKM timer values.

6.3.2.3.9.4 Auth Reject (authorization reject) message

The BS responds to an SS's authorization request with an Auth Reject message if the BS rejects the SS's authorization request.

Code: 6

Attributes are shown in Table 54.

Table 54—Auth Reject message attributes

Attribute	Contents
Error-Code	Error code identifying reason for rejection of authorization request.
Display-String (optional)	Display String providing reason for rejection of authorization request.

The Error-Code and Display-String attributes describe to the requesting SS the reason for the authorization failure.

6.3.2.3.9.5 Key Request message

Code: 7

For PMP operations, attributes are shown in Table 55.

Table 55—Key Request message attributes

Attribute	Contents
Key-Sequence-Number	AK sequence number.
SAID	Security association identifier.
HMAC-Digest	Keyed SHA message digest.

The HMAC-Digest attribute shall be the final attribute in the message's attribute list.

Inclusion of the keyed digest allows the BS to authenticate the Key Request message. The HMAC-Digest's authentication key is derived from the AK or operator shared secret.

6.3.2.3.9.6 Key Reply message

Code: 8

Attributes are shown in Table 56.

Table 56—Key Reply message attributes

Attribute	Contents
Key-Sequence-Number	AK sequence number.
SAID	Security Association ID.
TEK-Parameters	"Older" generation of key parameters relevant to SAID.
TEK-Parameters	"Newer" generation of key parameters relevant to SAID.
HMAC-Digest	Keyed SHA message digest.

The TEK-Parameters attribute is a compound attribute containing all of the keying material corresponding to a particular generation of a SAID's TEK. This would include the TEK, the TEK's remaining key lifetime, its key sequence number, and the cipher block chaining (CBC) IV. The TEK is encrypted. See 11.9.8 for details.

At all times, the BS maintains two sets of active generations of keying material per SAID. (A set of keying material includes a TEK and its corresponding CBC IV.) One set corresponds to the "older" generation of keying material; the second set corresponds to the "newer" generation of keying material. The newer generation has a key sequence number one greater than (modulo 4) that of the older generation. Subclause 7.4.1 specifies BS requirements for maintaining and using a SAID's two active generations of keying material.

The BS distributes to a client SS both generations of active keying material. Thus, the Key Reply message contains two TEK-Parameters attributes, each containing the keying material for one of the SAID's two active sets of keying material.

The HMAC-Digest attribute shall be the final attribute in the message's attribute list.

Inclusion of the keyed digest allows the receiving client to authenticate the Key Reply message and ensure SS and BS have synchronized AKs. The HMAC-Digest attribute's authentication key is derived from the AK. See 7.5 for details.

6.3.2.3.9.7 Key Reject message

Receipt of a Key Reject message indicates the receiving client SS is no longer authorized for a particular SAID.

Code: 9

Attributes are shown in Table 57.

Table 57—Key Reject message attributes

Attribute	Contents
Key-Sequence-Number	AK sequence number.
SAID	Security association identifier.
Error-Code	Error code identifying reason for rejection of Key Request message.
Display-String (optional)	Display string containing reason for Key Reject message.
HMAC-Digest	Keyed SHA message digest.

The HMAC-Digest attribute shall be the final attribute in the message's attribute list.

Inclusion of the keyed digest allows the receiving client to authenticate the Key Reject message and ensure SS and BS have synchronized AKs. The HMAC-Digest attribute's authentication key is derived from the AK. See 7.5 for details.

6.3.2.3.9.8 Authorization Invalid message

The BS may send an Authorization Invalid message to a client SS as

a) An unsolicited indication, or
b) A response to a message received from that SS.

In either case, the Authorization Invalid message instructs the receiving SS to reauthorize with its BS.

The BS sends an Authorization Invalid message in response to a Key Request message if

— The BS does not recognize the SS as being authorized (i.e., no valid AK associated with the requesting SS), or
— Verification of the Key Request message's keyed message digest (in the HMAC-Digest attribute) failed, indicating a loss of AK synchronization between SS and BS.

Code: 10

Attributes are shown in Table 58.

Table 58—Authorization Invalid message attributes

Attribute	Contents
Error-Code	Error code identifying reason for invalid authorization.
Display-String (optional)	Display string describing failure condition.

6.3.2.3.9.9 TEK Invalid message

The BS sends a TEK Invalid message to a client SS if the BS determines that the SS encrypted an UL PDU with a TEK (i.e., a SAID's TEK key sequence number), contained within the received packet's MAC header, that is out of the BS's range of known, valid sequence numbers for that SAID.

Code: 11

Attributes are shown in Table 59.

Table 59—TEK Invalid message attributes

Attribute	Contents
Key-Sequence-Number	AK sequence number.
SAID	Security Association ID.
Error-Code	Error code identifying reason for TEK Invalid message.
Display-String (optional)	Display string containing vendor-defined information.
HMAC-Digest	Keyed SHA message digest.

The HMAC-Digest attribute shall be the final attribute in the message's attribute list.

Inclusion of the keyed digest allows the receiving client to authenticate the TEK Invalid message and ensure SS and BS have synchronized AKs. The HMAC-Digest attribute's authentication key is derived from the AK. See 7.5 for details.

6.3.2.3.9.10 Auth Info (authentication information) message

The Auth Info message contains a single CA-Certificate attribute, containing an X.509 CA certificate for the manufacturer of the SS. The SS's X.509 user certificate shall have been issued by the CA identified by the X.509 CA certificate.

Auth Info messages are strictly informative; while the SS shall transmit Auth Info messages as indicated by the Authentication state model (7.2.1.5), the BS may ignore them.

Code: 12

Attributes are shown in Table 60.

Table 60—Auth Info message attributes

Attribute	Contents
CA-Certificate	Certificate of manufacturer CA that issued SS certificate.

The CA-Certificate attribute contains an X.509 CA certificate for the CA that issued the SS's X.509 user certificate. The external CA issues these CA certificates to SS manufacturers.

6.3.2.3.9.11 PKMv2 RSA-Request message

A client MS sends a PKMv2 RSA-Request message to the BS in order to request mutual authentication in the RSA-based authorization.

Code: 13

Attributes are shown in Table 61.

Table 61— PKMv2 RSA-Request message attributes

Attribute	Contents
MS_Random	A 64-bit random number generated in the MS
MS_Certificate	Contains the MS's X.509 user certificate
SAID	MS's Primary SAID equal to the Basic CID
SigSS	An RSA signature over all the other attributes in the message

The MS-certificate attribute contains an X.509 MS certificate (see 7.6) issued by the MS's manufacturer. The MS's X.509 certificate is as defined in 6.3.2.3.9.2.

The SigSS attribute indicates a RSA signature over all the other attributes in this message, and the MS's private key is used to make a RSA signature.

6.3.2.3.9.12 PKMv2 RSA-Reply message

Sent by the BS to a client MS in response to a PKMv2 RSA-Request message, the PKMv2 RSA-Reply message contains an encrypted pre-primary authorization key (pre-PAK), the key's lifetime, and the key's sequence number. The pre-PAK shall be encrypted with the MS's public key. The MS_Random number is returned from the PKMv2 RSA-Request message, along with a random number supplied by the BS, thus enabling assurance of key liveness.

Code: 14

Attributes are shown in Table 62.

Table 62— PKMv2 RSA-Reply message attributes

Attribute	Contents
MS_Random	A 64-bit random number generated in the MS
BS_Random	A 64-bit random number generated in the BS
Encrypted pre-PAK	RSA-OAEP-Encrypt(PubKey(MS), pre-PAK | MS MAC Address)
Key Lifetime	PAK aging timer

Table 62— PKMv2 RSA-Reply message attributes *(continued)*

Attribute	Contents
Key Sequence Number	PAK sequence number
BS_Certificate	Contains the BS's X.509 certificate
SigBS	An RSA signature over all the other attributes in the message

The SigBS attribute indicates a RSA signature over all the other attributes in this message, and the BS's private key is used to make a RSA signature.

6.3.2.3.9.13 PKMv2 RSA-Reject message

The BS responds to an SS's authorization request with a PKMv2 RSA-Reject message if the BS rejects the SS's authorization request. When an MS receives this message, an MS may retransmit the PKMv2 RSA-Request message or quit RSA-based mutual authentication.

Code: 15

Attributes are shown in Table 63.

Table 63—PKMv2 RSA-Reject message attributes

Attribute	Contents
MS_Random	A 64-bit random number generated in the MS
BS_Random	A 64-bit random number generated in the BS
Error-Code	Error code identifying reason for rejection of authorization request
BS_Certificate	Contains the BS's X.509 certificate
Display-String (optional)	Display string providing reason for rejection of authorization request
SigBS	An RSA signature over all the other attributes in the message

The Error-Code and Display-String attributes describe to the requesting MS the reason for the RSA-based authorization failure.

The SigBS attribute indicates a RSA signature over all the other attributes in this message, and the BS's private key is used to make a RSA signature.

6.3.2.3.9.14 PKMv2 RSA-Acknowledgement message

The MS sends the PKMv2 RSA-Acknowledgement message to BS in response to a PKMv2 RSA-Reply message. Only if the value of the Auth Result Code attribute is failure, then the Error-Code and Display-String attributes can be included in this message.

Code: 16

Attributes are shown in Table 64.

Table 64—PKMv2 RSA-Acknowledgement message attributes

Attribute	Contents
BS_Random	A 64-bit random number generated in the BS
Auth Result Code	Indicates result (success or failure) of authorization procedure
Error-Code	Error code identifying reason for rejection of authorization request
Display-String (optional)	Display string providing reason for rejection of authorization request
SigSS	An RSA signature over all the other attributes in the message

The SigSS attribute indicates a RSA signature over all the other attributes in this message, and the SS's private key is used to make a RSA signature.

6.3.2.3.9.15 PKMv2 EAP-Start message

EAP Start may be used to initiate an EAP session.

In the case of EAP reauthentication, the HMAC/CMAC Digest and Key Sequence Number attributes shall be included. At initial EAP authentication, these attributes are omitted.

The use of EAP Start to initiate an EAP session during initial network entry is optional. The BS shall not rely on its arrival in order to initiate an EAP session.

Code: 17

Attributes are shown in Table 65.

Table 65—PKMv2 EAP-Start message attributes

Attribute	Contents
Key Sequence Number	AK sequence number
HMAC/CMAC Digest	Message digest calculated using AK

6.3.2.3.9.16 PKMv2 EAP-Transfer message

When an MS has an EAP payload received from an EAP method for transmission to the BS or when a BS has an EAP payload received from an EAP method for transmission to the MS, it encapsulates it in a PKMv2 EAP-Transfer message. In the case of reauthentication, the HMAC/CMAC Digest and Key Sequence Number attributes shall be included.

Code: 18

Attributes are shown in Table 66.

Table 66—PKMv2 EAP-Transfer message attributes

Attribute	Contents
EAP Payload	Contains the EAP authentication data, not interpreted in the MAC
Key Sequence Number	AK sequence number
HMAC/CMAC Digest	Message digest calculated using AK

The EAP Payload field carries data in the format described in section 4 of IETF RFC 3748.

6.3.2.3.9.17 PKMv2 SA-TEK-Challenge message

The BS transmits the PKMv2 SA-TEK-Challenge message as a first step in the 3-way SA-TEK handshake at initial network entry and at reauthorization. The BS shall send this message to the MS after finishing authorization procedure(s) selected by the negotiated Authorization Policy Support included in the SBC-REQ/RSP messages. It identifies an AK to be used, and includes a random number challenge to be returned by the MS in the PKMv2 SA-TEK-Request message.

Code: 20

Attributes are shown in Table 67.

Table 67—PKMv2 SA-TEK-Challenge message attributes

Attribute	Contents
BS_Random	A freshly generated random number of 64 bits.
Key Sequence Number	AK sequence number.
AKID	Identifies the authorization key (this is the AKID of the *new* AK in the case of reauthentication).
Key lifetime	PMK lifetime, this attribute shall include only follows EAP-based authorization or EAP-based reauthorization procedures.
HMAC/CMAC Digest	Message authentication digest for this message.

The generation of the AK sequence number and the authorization key identifier (AKID) is defined in 7.2.2.4.1.

The HMAC/CMAC Digest attribute shall be the final attribute in the message's attribute list.

Inclusion of the HMAC/CMAC Digest attribute allows the MS and BS to authenticate a PKMv2 SA-TEK-Challenge message. The HMAC/CMAC Digest attribute's authentication keys are derived from the AK.

6.3.2.3.9.18 PKMv2 SA-TEK-Request message

The MS transmits the PKMv2 SA-TEK-Request message after receipt and successful HMAC Digest or CMAC value verification of an SA-Challenge tuple or PKMv2 SA-TEK-Challenge message from the BS. The PKMv2 SA-TEK-Request proves liveliness of the MS and its possession of the AK to the BS. If this message is being generated during initial network entry, then it constitutes a request for SA-Descriptors identifying the primary and static SAs and GSAs the requesting MS is authorized to access and their particular properties (e.g., type, cryptographic suite).

If this message is being generated following HO, then it constitutes a request for establishment (in the target BS) of TEKs, GTEKs, and group key encryption keys (GKEKs) for the MS and renewal of active primary, static and dynamic SAs and associated SAIDs used by the MS in its previous serving BS.

Code: 21

Attributes are shown in Table 68.

Table 68—PKMv2 SA-TEK-Request message attributes

Attribute	Contents
MS_Random	A 64-bit number chosen by the MS freshly for every new handshake[a]
BS_Random	The 64-bit random number used in the PKMv2 SA-TEK-Challenge message
Key Sequence Number	AK sequence number
AKID	Identifies the authorization key that was used for protecting this message
Security-Capabilities	The requesting MS's supported cryptographic suites (11.9.13)
Security Negotiation Parameters	The requesting MS's security capabilities (see 11.8.4)
HMAC/CMAC Digest	Message authentication digest for this message

[a]Receipt of a new BS random value in SA-TEK-Challenge indicates the beginning of a new handshake.

6.3.2.3.9.19 PKMv2 SA-TEK-Response message

The BS transmits the PKMv2 SA-TEK-Response message as a final step in the 3-way SA-TEK handshake.

Code: 22

Attributes are shown in Table 69.

Table 69—PKMv2 SA-TEK-Response message attributes

Attribute	Contents
MS_Random	The number received from the MS.
BS_Random	The random number included in the PKMv2 SA-TEK-Challenge message.
Key Sequence Number	AK sequence number.

Table 69—PKMv2 SA-TEK-Response message attributes *(continued)*

Attribute	Contents
AKID	Identifies the authorization key to the MS that was used for protecting this message.
SA_TEK_Update	A compound TLV list each of which specifies a SAID and additional properties of the SA that the MS is authorized to access. This compound field may be present at the reentry only. For each active SA in previous serving BS, corresponding TEK, GTEK, and GKEK parameters are included.
Frame Number	An absolute frame number in which the old PMK and all its associate AKs should be discarded.
(one or more) SA-Descriptor(s)	Each compound SA-Descriptor attribute specifies a SAID and additional properties of the SA. This attribute is present at the initial network entry or reentry after receipt of a RNG-RSP message with HO Process Optimization bits (Bit 1, Bit 2)=(0,0).
Security Negotiation Parameters	The responding BS's security capabilities (see 11.8.4).
HMAC/CMAC Digest	Message authentication digest for this message.
PKM configuration settings	PKM configuration defined in 11.9.18

6.3.2.3.9.20 PKMv2 Key-Request message

An MS sends a PKMv2 Key-Request message to the BS to request new TEK and TEK-related parameters (GTEK and GTEK-related parameters for MBS) or GKEK and GKEK-related parameters for MBS.

Code: 23

Attributes are shown in Table 70.

Table 70—PKMv2 Key-Request message attributes

Attribute	Contents
Key Sequence Number	AK sequence number
SAID	Security association identifier —GSAID for MBS
Nonce	A random number generated in an MS
HMAC/CMAC Digest	Message digest calculated using AK

The HMAC/CMAC Digest attribute shall be the final attribute in the message's attribute list.

Inclusion of the HMAC/CMAC Digest attribute allows the MS and BS to authenticate the PKMv2 Key-Request message. The HMAC/CMAC Digest attribute's authentication key is derived from the AK.

6.3.2.3.9.21 PKMv2 Key-Reply message

The BS responds to an MS's PKMv2 Key-Request message with a PKMv2 Key-Reply message.

Code: 24

Attributes are shown in Table 71.

Table 71—PKMv2 Key-Reply message attributes

Attribute	Contents
Key Sequence Number	AK sequence number.
SAID	Security association identifier —GSAID for MBS.
TEK-Parameters	"Older" generation of key parameters relevant to SAID —GTEK-Parameters for the MBS.
TEK-Parameters	"Newer" generation of key parameters relevant to SAID. — GTEK-Parameters for the multicast or broadcast service.
GKEK-Parameters	"Older" generation of GKEK-related parameters for MBS.
GKEK-Parameters	"Newer" generation of GKEK-related parameters for MBS.
Nonce	A same random number included in the PKMv2 Key-Request message.
HMAC/CMAC Digest	Message digest calculated using AK.

The TEK-Parameters and SAID attributes are as defined in 6.3.2.3.9.5.

The GKEK-Parameters attribute is a compound attribute containing all of the GKEK-related parameters corresponding to a GSAID. This would include the GKEK, the GKEK's remaining key lifetime, and the GKEK's key sequence number. The older generation of the GKEK-Parameters attribute is valid within the current lifetime, and the newer generation of the GKEK-Parameters attribute is valid within the next lifetime.

The BS shall always supply fresh (see 7.2.2.2.6) key material in the newer generation of Key Parameters in the PKMv2 Key-Reply message.

The HMAC/CMAC Digest attribute shall be the final attribute in the message's attribute list.

Inclusion of the HMAC/CMAC Digest attribute allows the MS and BS to authenticate the PKMv2 Key-Reply message. The HMAC/CMAC Digest attribute's authentication key is derived from the AK.

6.3.2.3.9.22 PKMv2 Key-Reject message

The BS responds to an MS's PKMv2 Key-Request message with a PKMv2 Authorization-Reject message if the BS rejects the MS's traffic keying material request.

Code: 25

Attributes are shown in Table 72.

Table 72—PKMv2 Key-Reject message attributes

Attribute	Contents
Key Sequence Number	AK sequence number.
SAID	Security association identifier.
Error-Code	Error code identifying reason for rejection of the PKMv2 Key-Request message.
Display-String (optional)	Display string containing reason for the PKMv2 Key-Request message.
Nonce	A same random number included in the PKMv2 Key Request message.
HMAC/CMAC Digest	Message digest calculated using AK.

The HMAC/CMAC Digest attribute shall be the final attribute in the message's attribute list.

Inclusion of the HMAC/CMAC Digest attribute allows the MS and BS to authenticate the PKMv2 Key-Reject message. The HMAC/CMAC Digest attribute's authentication key is derived from the AK.

6.3.2.3.9.23 PKMv2 SA-Addition message

This message is sent by the BS to the SS to establish one or more additional SAs.

Code: 26

Attributes are shown in Table 73.

Table 73—PKMv2 SA-Addition message attributes

Attribute	Contents
Key Sequence Number	AK sequence number.
(one or more) SA-Descriptor(s)	Each compound SA-Descriptor attribute specifies a SAID and additional properties of the SA.
HMAC/CMAC Digest	Message digest calculated using AK.

The HMAC/CMAC Digest attribute shall be the final attribute in the message's attribute list.

Inclusion of the HMAC/CMAC Digest attribute allows the MS and BS to authenticate the PKMv2 SA-Addition message. The HMAC/CMAC Digest attribute's authentication key is derived from the AK.

6.3.2.3.9.24 PKMv2 TEK-Invalid message

The BS sends a PKMv2 TEK-Invalid message to a client MS if the BS determines that the MS encrypted an UL PDU with a TEK (i.e., a SAID's TEK key sequence number), contained within the received packet's MAC header, that is out of the BS's range of known, valid sequence numbers for that SAID.

Code: 27

Attributes are shown in Table 74.

Table 74—PKMv2 TEK-Invalid message attributes

Attribute	Contents
Key Sequence Number	AK sequence number.
SAID	Security association identifier.
Error-Code	Error code identifying reason for PKMv2 TEK-Invalid message.
Display-String (optional)	Display string containing reason for the PKMv2 TEK-Invalid message.
HMAC/CMAC Digest	Message digest calculated using AK.

The HMAC/CMAC Digest attribute shall be the final attribute in the message's attribute list.

Inclusion of the HMAC/CMAC Digest attribute allows the MS and BS to authenticate the PKMv2 SA-Addition message. The HMAC/CMAC Digest attribute's authentication key is derived from the AK.

6.3.2.3.9.25 PKMv2 Group-Key-Update-Command message

This message is sent by BS to refresh and push the GKEK-related parameters (for GKEK update mode) or the GTEK-related parameters (for GTEK update mode) to MSs served with the specific multicast service, broadcast service, or MBS.

Code: 28

Attributes are shown in Table 75.

Table 75—PKMv2 Group-Key-Update-Command message attributes

Attribute	Contents
Key Sequence Number	AK sequence number for GKEK update mode, GKEK sequence number for GTEK update mode.
GSAID	Security association identifier.
Key Push Modes	Usage code of PKMv2 Group-Key-Update-Command message.
Key Push Counter	Counter one greater than that of older generation.
GTEK-Parameters	"Newer" generation of GTEK-related parameters relevant to GSAID. The GTEK-Parameters is the TEK-Parameters for multicast, broadcast service, or MBS.
GKEK-Parameters	"Newer" generation of GKEK-related parameters for multicast, broadcast service, or MBS.
HMAC/CMAC Digest	Message integrity code of this message.

Key Sequence Number attribute is the sequence number of the shared AK between an MS and a BS in this message for GKEK update mode. Key Sequence number is the GKEK sequence number in this message for GTEK update mode.

GSAID is SAID for the multicast group or the broadcast group. The type and length of the GSAID is equal to ones of the SAID.

There are two types in a PKMv2 Group-Key-Update-Command message, GKEK update mode and GTEK update mode. The former is used to update GKEK, and the latter is used to update GTEK for the multicast service, the broadcast service, or MBS. The Key Push Modes attribute indicates the usage code of a PKMv2 Group-Key-Update-Command message. The PKMv2 Group-Key-Update-Command message for the GKEK update mode is carried on the primary management connection, but, for the GTEK update mode, it is carried on the broadcast connection. A few of the attributes in a PKMv2 Group-Key-Update-Command message shall not be used according to this Key Push Modes attribute's value. See 11.9.27 for details.

The Key Push Counter attribute is used to protect against replay attacks. This value is one greater than that of older generation. If the CMAC-Digest is included in this message, then the Key Push Counter may not be included.

A PKMv2-Group-Key-Update-Command message contains only the newer generation of key parameters, because this message informs an MS of key material to be used for the next lifetime. The GTEK-Parameters attribute is a compound attribute containing all of the keying material corresponding to a newer generation of a GSAID's GTEK. This would include the GTEK, the GTEK's remaining key lifetime, the GTEK's key sequence number, the associated GKEK sequence number, and the cipher block chaining (CBC) initialization vector. The GTEK is TEK for the multicast group or the broadcast group. The type and length of the GTEK is equal to ones of the TEK. The GKEK (Group Key Encryption Key) can be randomly generated from a BS or a network entity (i.e., an ASA server or an MBS server). The GKEK should be identically shared within the same multicast group, broadcast service group or MBS group. The GTEK is encrypted with GKEK for the multicast service, broadcast service or MBS. GKEK parameters contain the GKEK encrypted by the KEK, GKEK sequence number, and GKEK lifetime. See 7.5.4.5 for details.

The HMAC/CMAC Digest attribute shall be the final attribute in the message's attribute list. Inclusion of the keyed digest allows the receiving client to authenticate the PKMv2 Group-Key-Update-Command message. The HMAC/CMAC Digest attribute's authentication key is derived from the AK for the GKEK update mode and GKEK for the GTEK update mode. See 7.2.2.2.9 for details.

6.3.2.3.9.26 MIH Initial Request message

The MS sends this message to the BS to deliver an MIH query encapsulated in an MIHF frame.

Code: 31

Attributes are shown in Table 76.

Table 76—MIH Initial Request attributes

Attribute	Contents
MIHF frame type	Indicates the type of MIHF frame (11.1.11.2)
Delivery Method and Status Code	Indicates the delivery method of query response (11.9.39)
MIHF frame	The encapsulated MIHF query (11.1.11.1)

6.3.2.3.9.27 MIH Acknowledge

This message is sent by the BS to the MS to acknowledge a received MIH query encapsulated in an MIHF frame. The response to the query is sent in a later MIH Comeback Response message, and the MS uses a Query ID, received in this MIH Acknowledge message and associated with the MS Initial Request by virtue of the stateful nature of the MIH Acknowledge, to correlate the MIH Initial Request message query with the later response.

Code: 32

Attributes are shown in Table 77.

Table 77—MIH Acknowledge attributes

Attribute	Contents
Cycle	Indicates the delivery method of query response (11.9.38)
Query ID	Used to map query and query response (11.1.11.3)
Delivery Method and Status Code	Indicates the delivery method and status code (11.9.39)

6.3.2.3.9.28 MIH Comeback Response

The BS sends this message to the MS to deliver a query response encapsulated in an MIHF frame.

Code: 33

Attributes are shown in Table 78.

Table 78—MIH Comeback Response attributes

Attribute	Contents
MIHF frame type	Indicates the type of the included MIHF frame. Only included when an MIHF frame is present.
Query ID	Used to map query and query response (11.1.11.3).
Delivery Method and Status Code	Indicates the delivery method and status code (11.9.39).
MIHF frame	The encapsulated MIH response (11.1.11.1).

6.3.2.3.10 DSA-REQ message

A DSA-REQ message is sent by an SS or BS to create a new service flow.

Table 79—DSA-REQ message format

Syntax	Size (bit)	Notes
DSA-REQ_Message_Format() {	—	—
Management Message Type = 11	8	—
Transaction ID	16	—
TLV Encoded Information	*variable*	TLV-specific
}	—	—

An SS or BS shall generate DSA-REQ messages in the form shown in Table 79, including the following parameters:

CID *(in the generic MAC header)*
SS's primary management connection identifier.

Transaction ID
Unique identifier for this transaction assigned by the sender.

All other parameters are coded as TLV tuples.

A DSA-REQ message shall not contain parameters for more than one service flow unless the Group parameter Create/Change TLV (11.13.39) is used.

The DSA-REQ message shall contain the following:

Service Flow Parameters (see 11.13)
Specification of the service flow's traffic characteristics and scheduling requirements.

Convergence Sublayer Parameter Encodings (see 11.13.18)
Specification of the service flow's CS-specific parameters.

The DSA-REQ message shall contain the following parameter encoded as a TLV tuple if authentication is supported:

HMAC/CMAC Tuple (see 11.1.2)
The HMAC/CMAC Tuple attribute contains a keyed message digest (to authenticate the sender). The HMAC Tuple attribute shall be the final attribute in the DSx message's attribute list.

6.3.2.3.10.1 SS-Initiated DSA

The SFID shall not be present in the DSA message; at the BS, the service flow within the DSA-REQ message shall be assigned a unique SFID, which shall be sent back in the DSA-RSP message. SS-initiated DSA-REQ messages may use the service class name in place of some, or all, of the QoS parameters.

6.3.2.3.10.2 BS-Initiated DSA

BS-initiated DSA-REQ messages may also include a CID. CIDs are unique within the MAC domain.

BS-initiated DSA-REQ messages for named service classes shall include the QoS parameter set associated with that service class. BS-initiated DSA-REQ messages shall also include the Target SAID for the service flow.

6.3.2.3.11 DSA-RSP message

A DSA-RSP message shall be generated in response to a received DSA-REQ message. The format of a DSA-RSP message shall be as shown in Table 80.

Table 80—DSA-RSP message format

Syntax	Size (bit)	Notes
DSA-RSP_Message_Format() {	—	—
Management Message Type = 12	8	—
Transaction ID	16	—
Confirmation Code	8	—
TLV Encoded Information	*variable*	TLV-specific
}	—	—

Parameters shall be as follows:

CID *(in the generic MAC header)*
SS's primary management connection identifier.

Transaction ID
Transaction ID from corresponding DSA-REQ.

Confirmation Code (see 11.13)
The appropriate confirmation code (CC) for the entire corresponding DSA-REQ.

All other parameters are coded as TLV tuples.

If the transaction is successful, the DSA-RSP message may contain the following:

Service Flow Parameters (see 11.13)
The complete specification of the service flow shall be included in the DSA-RSP if it includes a newly assigned CID or an expanded service class name.

CS Parameter Encodings (see 11.13.18)
Specification of the service flow's CS-specific parameters.

Whether successful or unsuccessful, the message shall include the following parameter encoded as a TLV tuple if authentication is supported:

HMAC/CMAC Tuple (see 11.1.2.1)
The HMAC/CMAC Tuple attribute contains a keyed message digest (to authenticate the sender). The HMAC Tuple attribute shall be the final attribute in the DSx message's attribute list.

6.3.2.3.11.1 SS-Initiated DSA

The BS's DSA-RSP message for service flows that are successfully added shall contain an SFID. The DSA-RSP message for successfully admitted or active UL QoS parameter sets shall also contain a CID.

The BS's DSA-RSP message shall also include the Target SAID for the service flow. If the corresponding DSA-REQ message uses the service class name (see 11.13.3) to request service addition, a DSA-RSP message shall contain the QoS parameter set associated with the named service class. If the service class name is used in conjunction with other QoS parameters in the DSA-REQ message, the BS shall accept or reject the DSA-REQ message using the explicit QoS parameters in the DSA-REQ message. If these service flow encodings conflict with the service class attributes, the BS shall use the DSA-REQ message values as overrides for those of the service class.

6.3.2.3.11.2 BS-Initiated DSA

If a DSA-RSP with status success is sent and Service Flow Parameter TLVs are included, the only Service Flow Parameter TLVs that may be included shall be those specified under 11.13.17 (ARQ TLVs for ARQ enabled connections).

6.3.2.3.12 DSA-ACK message

A DSA-ACK message shall be generated in response to a received DSA-RSP message. The format of a DSA-ACK message shall be as shown in Table 81.

Table 81—DSA-ACK message format

Syntax	Size (bit)	Notes
DSA-ACK_Message_Format() {	—	—
Management Message Type = 13	8	—
Transaction ID	16	—
Confirmation Code	8	—
TLV Encoded Information	*variable*	TLV-specific
}	—	—

Parameters shall be as follows:

CID *(in the generic MAC header)*
SS's primary management connection identifier.

Transaction ID
Transaction ID from corresponding DSA-RSP.

Confirmation Code (see 11.13)
The appropriate CC for the entire corresponding DSA-RSP.

All other parameters are coded TLV tuples.

HMAC/CMAC Tuple (see 11.1.2)
The HMAC/CMAC Tuple attribute contains a keyed message digest (to authenticate the sender). The HMAC Tuple attribute shall be the final attribute in the DSx message's attribute list.

6.3.2.3.13 DSC-REQ (DSC request) message

A DSC-REQ message is sent by an SS or BS to dynamically change the parameters of an existing service flow.

An SS or BS shall generate DSC-REQ messages in the form shown in Table 82, including the following parameters:

CID *(in the generic MAC header)*
SS's primary management connection identifier.

Transaction ID
Unique identifier for this transaction assigned by the sender.

All other parameters are coded as TLV tuples.

Table 82—DSC-REQ message format

Syntax	Size (bit)	Notes
DSC-REQ_Message_Format() {	—	—
Management Message Type = 14	8	—
Transaction ID	16	—
TLV Encoded Information	*variable*	TLV-specific
}	—	—

A DSC-REQ message shall not carry parameters for more than one service flow unless the Group parameter Create/Change TLV (11.13.39) is used.

A DSC-REQ message shall contain the following:

Service Flow Parameters (see 11.13)
Specifies the service flow's new traffic characteristics and scheduling requirements. The admitted and active QoS parameter sets currently in use by the service flow. If the DSC message is successful and it contains service flow parameters, but does not contain replacement sets for both admitted and active QoS parameter sets, the omitted set(s) shall be set to null. The service flow parameters shall contain a SFID.

The DSC-REQ shall contain the following parameter encoded as a TLV tuple if authentication is supported:

HMAC/CMAC Tuple (see 11.1.2)
The HMAC/CMAC Tuple attribute contains a keyed message digest (to authenticate the sender). The HMAC Tuple attribute shall be the final attribute in the DSx message's attribute list.

6.3.2.3.14 DSC-RSP (DSC response) message

A DSC-RSP shall be generated in response to a received DSC-REQ. The format of a DSC-RSP shall be as shown in Table 83.

Table 83—DSC-RSP message format

Syntax	Size (bit)	Notes
DSC-RSP_Message_Format() {	—	—
Management Message Type = 15	8	—
Transaction ID	16	—
Confirmation Code	8	—
TLV Encoded Information	*variable*	TLV-specific
}	—	—

Parameters shall be as follows:

CID *(in the generic MAC header)*
SS's primary management connection identifier.

Transaction ID
Transaction ID from corresponding DSC-REQ.

Confirmation Code (see 11.13)
The appropriate CC for the corresponding DSC-REQ.

All other parameters are coded as TLV tuples.

If the transaction is successful, the DSC-RSP may contain the following:

Service Flow Parameters (see 11.13)
The complete specification of the service flow shall be included in the DSC-RSP only if it includes a newly assigned CID or an expanded service class name. If a service flow parameter set contained an UL admitted QoS parameter set and this service flow does not have an associated CID, the DSC-RSP shall include a CID. If a service flow parameter set contained a service class name and an admitted QoS parameter set, the DSC-RSP shall include the QoS parameter set corresponding to the named service class. If specific QoS parameters were also included in the classed service flow request, these QoS parameters shall be included in the DSC-RSP instead of any QoS parameters of the same type of the named service class.

CS Parameter Encodings (see 11.13.18)
Specification of the service flow's CS-specific parameters.

Whether successful or unsuccessful, the message shall include the following parameter encoded as a TLV tuple if authentication is supported:

HMAC/CMAC Tuple (see 11.1.2)
The HMAC/CMAC Tuple attribute contains a keyed message digest (to authenticate the sender). The HMAC Tuple attribute shall be the final attribute in the DSx message's attribute list.

6.3.2.3.15 DSC-ACK (DSC acknowledge) message

A DSC-ACK shall be generated in response to a received DSC-RSP. The format of a DSC-ACK shall be as shown in Table 84.

Table 84—DSC-ACK message format

Syntax	Size (bit)	Notes
DSC-ACK_Message_Format() {	—	—
Management Message Type = 16	8	—
Transaction ID	16	—
Confirmation Code	8	—
TLV Encoded Information	*variable*	TLV-specific
}	—	—

Parameters shall be as follows:

CID *(in the generic MAC header)*
SS's primary management connection identifier.

Transaction ID
Transaction ID from the corresponding DSC-REQ.

Confirmation Code (see 11.13)
The appropriate CC for the entire corresponding DSC-RSP.

All other parameters are coded TLV tuples.

HMAC/CMAC Tuple (see 11.1.2)
The HMAC/CMAC Tuple attribute contains a keyed message digest (to authenticate the sender). The HMAC Tuple attribute shall be the final attribute in the DSx message's attribute list.

6.3.2.3.16 DSD-REQ message

A DSD-REQ is sent by an SS or BS to delete an existing service flow. The format of a DSD-REQ shall be as shown in Table 85.

Table 85—DSD-REQ message format

Syntax	Size (bit)	Notes
DSD-REQ_Message_Format() {	—	—
Management Message Type = 17	8	—
Transaction ID	16	—
Service Flow ID	32	—
TLV Encoded Information	*variable*	TLV-specific
}	—	—

Parameters shall be as follows:

CID *(in the generic MAC header)*
SS's primary management connection identifier.

Service Flow ID
The SFID to be deleted.

Transaction ID
Unique identifier for this transaction assigned by the sender.

All other parameters are coded as TLV tuples.

HMAC/CMAC Tuple (see 11.1.2.1)
The HMAC/CMAC Tuple attribute contains a keyed message digest (to authenticate the sender). The HMAC Tuple attribute shall be the final attribute in the DSx message's attribute list.

6.3.2.3.17 DSD-RSP message

A DSD-RSP shall be generated in response to a received DSD-REQ. The format of a DSD-RSP shall be as shown in Table 86.

Table 86—DSD-RSP message format

Syntax	Size (bit)	Notes
DSD-RSP_Message_Format() {	—	—
Management Message Type = 18	8	—
Transaction ID	16	—
Confirmation Code	8	—
Service Flow ID	32	—
TLV Encoded Information	*variable*	TLV-specific
}	—	—

Parameters shall be as follows:

CID *(in the generic MAC header)*
SS's primary management connection identifier.

Service Flow ID
SFID from the DSD-REQ to which this response refers.

Transaction ID
Transaction ID from the corresponding DSD-REQ.

Confirmation Code (see 11.13)
The appropriate CC for the corresponding DSD-REQ.

All other parameters are coded as TLV tuples.

HMAC/CMAC Tuple (see 11.1.2)
The HMAC/CMAC Tuple attribute contains a keyed message digest (to authenticate the sender). The HMAC Tuple attribute shall be the final attribute in the DSx message's attribute list.

6.3.2.3.18 MCA-REQ (multicast polling assignment request) message

The MCA-REQ message is sent to an SS to assign it to or remove it from a multicast polling group. The format of the message is shown in Table 87.

Table 87—MCA-REQ message format

Syntax	Size (bit)	Notes
MCA-REQ_Message_Format() {	—	—
Management Message Type = 21	8	—
Transaction ID	16	—
TLV Encoded Information	*variable*	TLV-specific
}	—	—

Parameters shall be as follows:

CID *(in the generic MAC header)*
SS's primary management connection identifier.

Transaction ID
Unique identifier for this transaction assigned by the sender.

All other parameters are coded as TLV tuples.

Multicast CID (see 11.10)
Assignment (see 11.10)

6.3.2.3.19 MCA-RSP (multicast polling assignment response) message

The MCA-RSP is sent by the SS in response to a MCA-REQ. The message format shall be as shown in Table 88.

Table 88—MCA-RSP message format

Syntax	Size (bit)	Notes
MCA-RSP_Message_Format() {	—	—
Management Message Type = 22	8	—
Transaction ID	16	—
Confirmation Code	8	—
}	—	—

Parameters shall be as follows:

CID *(in the generic MAC header)*
SS's primary management connection identifier.

Transaction ID
Unique identifier for this transaction assigned by the sender.

Confirmation Code
Zero indicates the request was successful. Nonzero indicates failure.

6.3.2.3.20 DBPC-REQ (DL burst profile change request) message

This message is not applicable to OFDMA PHY.

The DBPC-REQ message is sent by the SS to the BS on the SS's Basic CID to request a change of the least robust DL burst profile used by the BS to transport data to the SS (i.e., the DL operational burst profile). Note that a change of DL burst profile may also be requested by means of a RNG-REQ message as defined in 6.3.2.3.5.

The DBPC-REQ message shall be sent at the current operational Data Grant Burst Type for the SS. If the SS detects changes in the channel conditions on the DL, the SS uses this message to request transition to a more appropriate Data Grant Burst Type. The message format shall be as shown in Table 89.

Table 89—DBPC-REQ message format

Syntax	Size (bit)	Notes
DBPC-REQ_Message_Format() {	—	—
Management Message Type = 23	8	—
Reserved	4	Shall be set to zero
DIUC	4	—
Configuration Change Count	8	—
}	—	—

Parameters shall be as follows:

DIUC
Data grant DIUC values. (PHY-specific: SC—Table 220, OFDM—Table 275, OFDMA—Table 322)

Configuration Change Count
Value of Configuration Change Count provided in DCD defining the burst profile associated with DIUC.

6.3.2.3.21 DBPC-RSP (DL burst profile change response) message

This message is not applicable to OFDMA PHY.

The DBPC-RSP message shall be transmitted by the BS on the SS's Basic CID in response to a DBPC-REQ message from the SS. If the DIUC parameter is the same as requested in the DBPC-REQ message, then the request was accepted. Otherwise, if the request is rejected, the DIUC parameter shall be the previous DIUC at which the SS was receiving DL data. The message format shall be as shown in Table 90.

Table 90—DBPC-RSP message format

Syntax	Size (bit)	Notes
DBPC-RSP_Message_Format() {	—	—
Management Message Type = 24	8	—
Reserved	4	Shall be set to zero
DIUC	4	—
Configuration Change Count	8	—
}	—	—

Parameters shall be as follows:

DIUC
Data grant DIUC values. (PHY-specific: SC—Table 220, OFDM—Table 275, OFDMA—Table 322)

Configuration Change Count
Value of Configuration Change Count provided in DCD defining the burst profile associated with DIUC.

6.3.2.3.22 RES-CMD (reset command) message

The RES-CMD message shall be transmitted by the BS on an SS's Basic CID to force the SS to reset itself, reinitialize its MAC, and repeat initial system access. This message may be used if an SS is unresponsive to the BS or if the BS detects continued abnormalities in the UL transmission from the SS.

The RES-CMD message format is shown in Table 91.

Table 91—RES-CMD message format

Syntax	Size (bit)	Notes
RES-CMD_Message_Format() {	—	—
Management Message Type = 25	8	—
TLV encoded information	*variable*	—
}	—	—

The RES-CMD shall include the following parameter encoded as a TLV tuple if authentication is supported:

HMAC/CMAC Tuple (see 11.1.2)
The HMAC/CMAC Tuple shall be the last attribute in the message.

6.3.2.3.23 SBC-REQ (SS basic capability request) message

The SBC-REQ shall be transmitted by the SS during initialization. An SS shall generate SBC-REQ messages in the form shown in Table 92.

Table 92—SBC-REQ message format

Syntax	Size (bit)	Notes
SBC-REQ_Message_Format() {	—	—
Management Message Type = 26	8	—
TLV Encoded Information	*variable*	TLV-specific
}	—	—

An SS shall generate SBC-REQ messages including the following parameter:

Basic CID *(in the MAC header)*
The connection identifier in the MAC header is the Basic CID for this SS, as assigned in the RNG-RSP message.

All other parameters are coded as TLV tuples.

The Basic Capabilities Request contains the SS Capabilities Encodings (11.8) that are necessary to acquire NSP information and for effective communication with the SS during the remainder of the initialization protocols. NSP information is solicited in the SBC-REQ message when the SBC-REQ includes the SIQ TLV (11.8.9) with bit bit 0 set to 1.

The following parameter shall be included in the Basic Capability Request if the SS is intended to solicit NSP information:

Service Information Query (see 11.8.9)

The following parameter shall be included in the Basic Capabilities Request only if the SS is not intended to solicit NSP information:

Physical Parameters Supported (see 11.8.3)

The following parameters may be included if the SS is not intended to solicit NSP information:

Capabilities for construction and transmission of MAC PDUs (see 11.8.2)
Security negotiation parameters (see 11.8.4)
Visited NSP ID (see 11.8.11)
Auth Type for EAP (see 11.8.12)
MIH Capability Supported (see 11.8.10)

SDU MTU capability (see 11.8.15)
DL Coordinated Zone capability (see 11.8.16)

The Basic Capability Request shall include the following parameter encoded as a TLV tuple if authentication has been completed:

HMAC/CMAC Tuple (see 11.1.2)
Either the HMAC Tuple or the CMAC Tuple shall be the final attribute in the message's TLV attribute list. This attribute should be included in the message during HO reentry.

For FDD systems, the following parameter shall be included in the Basic Capabilities Request only if the SS is not intended to solicit NSP information:

Bandwidth Allocation Support (see 11.8.1)

6.3.2.3.24 SBC-RSP (SS basic capability response) message

The SBC-RSP shall be transmitted by the BS in response to a received SBC-REQ.

To provide flexibility, the message parameters following the Response field shall be encoded in a TLV format. See Table 93.

Table 93—SBC-RSP message format

Syntax	Size (bit)	Notes
SBC-RSP_Message_Format() {	—	—
Management Message Type = 27	8	—
TLV Encoded Attributes	*variable*	TLV-specific
}	—	—

A BS shall generate SBC-RSP messages in the form shown in Table 93, including both of the following parameters:

CID *(in the MAC header)*
The connection identifier in the MAC header is the Basic CID for this SS, as appears in the RNG-REQ message.

The following parameter may be included in the SBC-RSP.

SDU MTU capability (see 11.8.15)

NSP information is solicited in the SBC-REQ message when the SBC-REQ includes the SIQ TLV (11.8.9) with bit 0 set to 1.

If NSP information is solicited in the SBC-REQ, then the following parameters shall not be included in the SBC-RSP; otherwise the following parameters shall be included in the SBC-RSP if found in the SBC-REQ:

Physical Parameters Supported (see 11.8.3)
Bandwidth Allocation Support (see 11.8.1)
The BS response to the subset of SS capabilities present in the SBC-REQ message. The BS responds to the SS capabilities to indicate whether they may be used. If the BS does not recognize an SS capability, it may return this as "off" in the SBC-RSP.

Only capabilities set to "on" in the SBC-REQ may be set "on" in the SBC-RSP, as this is the handshake indicating that they have been successfully negotiated.

Security negotiation parameters (see 11.8.4)

HMAC/CMAC Tuple
Either the HMAC Tuple or the CMAC Tuple shall be the final attribute in the message's TLV attribute list. This attribute should be included in the message during HO reentry (see 11.1.2).

If NSP information is not solicited in the SBC-REQ, then the capabilities for construction and transmission of MAC PDUs (see 11.8.2) include the following parameter; otherwise, the following parameter shall not be included in the SBC-RSP:

Maximum number of supported security association (see 11.8.4.6)

The following parameter may be included in the SBC-RSP:

SII-ADV Message Pointer (see 11.8.14)

If NSP information is solicited in the SBC-REQ and the BS is configured with a list of NSP IDs, then the NSP List TLV and, if requested, the Verbose NSP Name List TLV shall be included unless the message includes an SII-ADV Message Pointer TLV providing a pointer to an SII-ADV message in which these TLVs are sent; if the message does include an SII-ADV Message Pointer TLV, then these TLVs may be included:

NSP List (see 11.1.10.1)
Verbose NSP Name List (see 11.1.10.2)
Verbose NSP Name List shall only be included in the message if NSP List TLV is also included in the message, the verbose NSP names were solicited in the SIQ TLV and the BS is configured with a list of verbose NSP names.

If NSP information is not solicited in the SBC-REQ, then the following parameters may be included when solicited in the SBC-REQ message:

MIH Capability Supported (see 11.8.10)

If the Visited NSP ID TLV is found in the SBC-REQ, then the following parameter shall be included:

Visited NSP Realm (see 11.8.13)

6.3.2.3.25 CLK-CMP (clock comparison) message

In network systems with service flows carrying information that requires the SSs to reconstruct their network clock signals (e.g., DS1 and DS3), CLK-CMP messages shall be periodically broadcast by the BS. When these services are not supported by the SS, the implementation of the CLK-CMP message at the SS shall be optional. If provisioned to do so, the BS shall take a clock difference measurement at every periodic interval (within the tolerance of the 10 MHz reference defined in the definition of the Clock Comparison

Value) defined in Table 554 and generate and transmit one CLK-CMP message according to the format shown in Table 94.

Table 94—CLK-CMP message format

Syntax	Size (bit)	Notes
CLK-CMP_Message_Format() {	—	—
Management Message Type = 28	8	—
Clock Count *n*	8	—
for (*i* = 1; *i* <= *n*; *i*++) {	—	For each clock signal 1 through *n*
Clock ID[*i*]	8	—
Sequence Number[*i*]	8	—
Comparison Value[*i*]	8	—
}	—	—
}	—	—

CLK-CMP messages shall include the following parameters where Clock ID, Sequence Number, and Clock Comparison Value (CCV) shall be repeated for each clock signal:

Clock Count
This 8-bit value shall be the number of CCVs included in the CLK-CMP message.

Clock ID
This 8-bit value shall be the unique identifier for each clock signal from which the CCVs are generated by the BS.

Sequence Number
This 8-bit value shall be incremented by one (modulo the field size, 256) by the BS whenever a new CLK-CMP message is generated. This parameter is used to detect packet losses.

Clock Comparison Value
This 8-bit value shall be the difference (modulo the field size, 256) between the following two reference clock signals: (1) a 10 MHz reference clock locked to the symbol clock of the airlink [such as a global positioning satellite (GPS) reference used to generate the symbol clock], and (2) an 8.192 MHz reference clock locked to the network clock.

6.3.2.3.26 DREG-CMD (de/reregister command) message

The DREG-CMD message shall be transmitted by the BS on an SS's Basic CID to force the SS to change its access state. The BS may transmit the DREG-CMD message unsolicited or in response to a DREG-REQ message. Upon receiving a DREG-CMD message, the SS shall take the action indicated by the action code.

The format of the message is shown in Table 95.

Table 95—DREG-CMD message format

Syntax	Size (bit)	Notes
DREG-CMD_Message_Format() {	—	—
Management Message Type = 29	8	—
Action Code	8	—
TLV encoded parameters	*variable*	—
}	—	—

The action code values and the corresponding actions are specified in Table 96.

Table 96—Action codes and actions

Action code (hexadecimal)	Action
00	SS shall immediately terminate service with the BS and should attempt network entry at another BS.
01	SS shall listen to the current BS but shall not transmit until a RES-CMD message or DREG-CMD message with action code 02 or 03 is received.
02	SS shall listen to the current BS but only transmit on the basic and primary management connections.
03	SS shall return to normal operation and may transmit on any of its active connections.
04	This option is valid only in response to a DREG-REQ message with De-Registration Request Code = 0x00. The SS shall terminate current Normal Operations with the BS.
05	MS shall begin MS idle mode initiation. See 6.3.23.1.
06	This option is valid only in response to a DREG-REQ message with De-Registration Request Code = 0x01. The behavior of MS to this action code is described in 6.3.23.1.
07–0xFF	*Reserved*

The DREG-CMD message shall include the following parameters encoded as TLV tuples if authentication is supported:

HMAC/CMAC Tuple (see 11.1.2)
The HMAC/CMAC Tuple shall be the last attribute in the message.

When the DREG-CMD message is sent with action code 0x05, the following TLVs shall be included:

Paging Information (see 11.1.8.3)
The Paging Information TLV defines the PAGING CYCLE, PAGING OFFSET Paging-Group-ID and Paging Interval Length parameters to be used by the MS in IDLE mode.

Paging Controller ID (see 11.1.8.2*)*

The Paging Controller ID is a logical network identifier for the serving BS or other network entity retaining MS service and operational information and/or administering paging activity for the MS while in idle mode. Paging Controller ID shall be set to BSID when a BS is acting as paging controller.

Idle Mode Retain Information

The Idle Mode Retain Information provided as part of this message is indicative only. Network reentry from idle mode process requirements may change at the time of actual reentry. For each bit location, a value of 0 indicates the information for the associated reentry management messages shall not be retained and managed, a value of 1 indicates the information for the associated reentry management message shall be retained and managed.

Bit 0: Retain MS service and operational information associated with SBC-REQ/RSP messages.
Bit 1: Retain MS service and operational information associated with PKM-REQ/RSP messages.
Bit 2: Retain MS service and operational information associated with REG-REQ/RSP messages.
Bit 3: Retain MS service and operational information associated with network address.
Bit 4: Retain MS service and operational information associated with time of day.
Bit 5: Retain MS service and operational information associated with TFTP messages.
Bit 6: Retain MS state information (see 11.14).
Bit 7: Consider Paging Preference of each service flow in resource retention. Bit 7 is meaningful when Bit 2 and Bit 6 have a value of 1. If Bit 2, Bit 6, and Bit 7 is 1, MS state information (see 11.14) is retained for service flows with positive Paging Preference. If Bit 2 and Bit 6 are 1 and Bit 7 is 0, MS state information (see 11.14) is retained for all service flows.

When the DREG-CMD message is sent with action code 0x05, the following TLVs may be included:

MAC Hash Skip Threshold

Maximum number of successive MOB_PAG-ADV messages that may be sent from a BS without individual notification for an MS, including MAC Address hash of an MS for which the action code is 00 (No Action Required). If a BS receives the DREG-REQ message containing MAC Hash Skip Threshold TLV, the BS may include MAC Hash Skip Threshold TLV in the DREG-CMD message. If the value is set to 0xFF, a BS shall omit MAC Address hash of the MS with No Action Required for every MOB_PAG-ADV message. If the value is set to zero, BS shall include the MS MAC Address hash in every MOB_PAG-ADV message.

The DREG-CMD message may include the following parameters encoded as TLV tuples:

REQ-duration

Waiting value for the DREG-REQ message re-transmission (measured in frames) if this is included with action code 0x06 in DREG-CMD. If serving BS includes REQ-duration in a DREG-CMD message including an Action Code = 0x05, the MS may initiate an Idle Mode request through a DREG-REQ with Action Code = 0x01, request for MS De-Registration from serving BS and initiation of MS Idle Mode, at REQ-duration expiration.

6.3.2.3.27 DSX-RVD (DSx received) message

The DSX-RVD message shall be generated by the BS in response to an SS-initiated DSx-REQ to inform the SS that the BS has received the DSx-REQ message in a more timely manner than provided by the DSx-RSP

message, which shall be transmitted only after the DSx-REQ is authenticated. The format of the DSX-RVD shall be as shown in Table 97.

Table 97—DSX-RVD message format

Syntax	Size (bit)	Notes
DSX-RVD_Message_Format() {	—	—
Management Message Type = 30	8	—
Transaction ID	16	—
Confirmation Code	8	—
}	—	—

Parameters shall be as follows:

CID *(in the generic MAC header)*
SS's primary management connection identifier.

Transaction ID
Transaction ID from corresponding DSx-REQ.

Confirmation Code (see 11.13)
The appropriate CC indicating the integrity of the corresponding DSx-REQ.

6.3.2.3.28 TFTP-CPLT (Config File TFTP complete) message

The TFTP-CPLT message shall be generated by a managed SS when it has successfully retrieved its configuration file from the provisioning server (see 6.3.9.12). If the SS does not need a configuration file, it shall send the TFTP-CPLT message to the BS anyway to indicate that it has completed initialization and is ready to accept services. The format of the TFTP-CPLT shall be as shown in Table 98.

Table 98—TFTP-CPLT message format

Syntax	Size (bit)	Notes
TFTP-CPLT_Message_Format() {	—	—
Management Message Type = 31	8	—
TLV encoded information	*variable*	—
}	—	—

Parameters shall be as follows:

CID *(in the generic MAC header)*
SS's primary management connection identifier.

The TFTP-CPLT shall include the following parameters encoded as a TLV tuple if authentication is supported:

HMAC/CMAC Tuple (see 11.1.2)
The HMAC/CMAC Tuple shall be the last attribute in the message.

6.3.2.3.29 TFTP-RSP (Config File TFTP complete response) message

The TFTP-RSP message shall be generated by the BS in response to a TFTP-CPLT message from the SS (see 6.3.9.12). The format of the TFTP-RSP shall be as shown in Table 99.

Table 99—TFTP-RSP message format

Syntax	Size (bit)	Notes
TFTP-RSP_Message_Format() {	—	—
Management Message Type = 32	8	—
Response	8	—
}	—	—

Parameters shall be as follows:

CID *(in the generic MAC header)*
SS's primary management connection identifier.

Response
A 1 byte quantity with one of the two values:

0 = OK
1 = Message authentication failure

6.3.2.3.30 ARQ-Feedback message

A system supporting ARQ shall be able to receive and process the ARQ-Feedback message.

The ARQ-Feedback message, as shown in Table 100, can be used to signal any combination of different ARQ ACKs (cumulative, selective, selective with cumulative). The message shall be sent on the appropriate basic management connection.

Table 100—ARQ-Feedback message format

Syntax	Size (bit)	Notes
ARQ_Feedback_Message_Format() {	—	—
Management Message Type = 33	8	—
ARQ_Feedback_Payload	*variable*	See 6.3.3.4.3.
}	—	—

ARQ_Feedback_Payload field shall be either sent using this ARQ Feedback message or by packing ("piggybacking") the ARQ_Feedback_Payload as described in 6.3.3.4.3.

6.3.2.3.31 ARQ-Discard message

This message is applicable to ARQ-enabled connections only.

The transmitter sends this message when it wants to skip a certain number of ARQ blocks. The ARQ Discard message shall be sent as a MAC management message on the basic management connection of the appropriate direction. Table 101 shows the format of the discard message.

Table 101—ARQ-Discard message format

Syntax	Size (bit)	Notes
ARQ_Discard_Message_Format() {	—	—
Management Message Type = 34	8	—
Connection ID	16	CID to which this message refers.
Reserved	5	Shall be set to zero.
BSN	11	Sequence number of the last block in the transmission window that the transmitter wants to discard.
}	—	—

6.3.2.3.32 ARQ-Reset message

This message is applicable to ARQ-enabled connections only.

The transmitter or the receiver may send this message. The message is used in a dialog to reset the parent connection's ARQ transmitter and receiver state machines. The ARQ Reset message shall be sent as a MAC management message on the basic management connection of the appropriate direction. Table 102 shows the format of the reset message.

Table 102—ARQ-Reset message format

Syntax	Size (bit)	Notes
ARQ_Reset_Message_Format() {	—	—
Management Message Type = 35	8	—
Connection ID	16	CID to which this message refers
Type	2	0b00 = Original message from Initiator 0b01 = Acknowledgment from Responder 0b10 = Confirmation from Initiator 0b11 = *Reserved*
Direction	2	0b00 = UL or DL 0b01 = UL 0b10 = DL 0b11 = *Reserved*
Reserved	4	Shall be set to zero
}	—	—

For Transport CIDs, the Direction bits shall be set to 0b00 on transmission, and ignored on reception. For Secondary Management CIDs, the Direction bits shall be set to 0b01 or 0b10 as appropriate and other values shall cause the message to be treated as invalid and discarded on reception.

6.3.2.3.33 Channel Measurement REP-REQ/RSP (report request/response)

If the BS, operating in bands below 11 GHz, requires RSSI and CINR channel measurement reports, it shall send the Channel Measurement REP-REQ message. The Channel Measurement REP-REQ message shall additionally be used to request the results of the measurements the BS has previously scheduled. Table 103 shows the Channel Measurement REP-REQ message.

Table 103—Channel Measurement REP-REQ message format

Syntax	Size (bit)	Notes
Report_Request_Message_Format() {	—	—
Management Message Type = 36	8	—
Report Request TLVs	*variable*	—
}	—	—

The Channel Measurement REP-REQ message shall contain the following TLV encoded parameters:

Report Request

The Channel Measurement REP-RSP message shall be used by the SS to respond to the channel measurements listed in the received Channel Measurement REP-REQ messages. Where regulation mandates detection of specific signals by the SS, the SS shall also send a Channel Measurement REP-RSP message in an unsolicited fashion upon detecting such signals on the channel in which it is operating if mandated by regulatory requirements. The SS may also send a Channel Measurement REP-RSP message containing channel measurement reports, in an unsolicited fashion, or when other interference is detected above a threshold value. When specific signal detection by an SS is not mandated by regulation, the SS may indicate "Unmeasured. Channel Not Measured" (see 11.12) in the Channel Measurement REP-RSP message when responding to the Channel Measurement REP-REQ message from the BS. Table 104 shows the Channel Measurement REP-RSP message.

Table 104—Channel Measurement REP-RSP message format

Syntax	Size (bit)	Notes
Report_Response_Message_Format {	—	—
Management Message Type = 37	8	—
Report Response TLVs	*variable*	—
}	—	—

The Channel Measurement REP-RSP message shall contain the following TLV encoded parameters:

Report
Compound TLV that shall contain the measurement Report in accordance with the Report Request (see 11.11).

Upon sending a Channel Measurement REP-RSP message, an SS shall reset all its measurement counters for each channel on which it reported.

6.3.2.3.34 FPC (fast power control) message

Power control shall be effected by the use of periodic ranging. In addition, the BS may adjust the power levels of multiple subscribers simultaneously with the FPC message. SSs shall apply the indicated change within the "FPC processing time." If the SS cannot apply the commanded power correction (SS is already at maximum or minimum power), the SS shall send a RNG-REQ message with the Ranging Anomalies parameter. FPC shall be sent on the Broadcast CID. This message shall only apply to OFDM, and OFDMA PHY specifications. See Table 105. Implementation of the FPC message at the BS is optional.

The SS shall apply the FPC power correction within the time interval given by "FPC processing time" (see Table 525) from the start of frame $n + 1$ (where frame n contains the FPC) to the end of frame $n + 1$, depending on the occurrence of the next scheduled UL allocation. If the UL allocation scheduled for this SS starts after the FPC processing time in frame $n + 1$ the correction shall be applied to this allocation. Otherwise the correction shall apply to the subsequent frames.

Table 105—FPC message format

Syntax	Size (bit)	Notes
Fast_Power_Control message format () {	—	—
Management Message Type = 38	8	—
Number of stations	8	—
Power measurement frame	8	—
for (*i* = 0; *i* < Number of stations; *i*++) {	—	—
Basic CID	16	—
Power adjust	8	—
}	—	—
}	—	—

Number of stations
Number of CID and Power Adjust tuples contained in this message.

Power measurement frame
The 8 LSBs of the frame number in which the BS measured the power corrections referenced in the message.

Basic CID
Basic connection identifier associated with the SS.

Power Adjust
Signed integer, which expresses the change in power level (in multiples of 0.25 dB) that the SS shall apply to its current transmission power.

6.3.2.3.35 AAS-FBCK-REQ/RSP (AAS channel feedback request/response) messages

The AAS-FBCK-REQ message shall be used by a system supporting AAS. This message serves to request channel measurement that will help in adjusting the direction of the adaptive array. See Table 106.

Table 106—AAS-FBCK-REQ message format

Syntax	Size (bit)	Nodes
AAS-FBCK-REQ_Message_Format() {	—	—
Management Message Type = 44	8	—
Message body	*variable*	See 8.3 or 8.4.
}	—	—

The AAS-FBCK-RSP message shall be sent as a response to the AAS-FBCK-REQ message after the indicated measurement period has expired. See Table 107.

Table 107—AAS-FBCK-RSP message format

Syntax	Size (bit)	Nodes
AAS-FBCK-RSP_Message_Format() {	—	—
Management Message Type = 45	8	—
Message body	*variable*	See 8.3 or 8.4.
}	—	—

6.3.2.3.36 AAS_Beam_Select message

The AAS_Beam_Select message may be used by a system supporting AAS. This message may be sent by the SS in an unsolicited manner, to inform the BS about the preferred beam for the AAS SS sending this message. The AAS_Beam_Select message shall be sent on the basic CID. See Table 108.

Table 108—AAS_Beam_Select message format

Syntax	Size (bit)	Notes
AAS_Beam_Select message format() {	—	—
Management Message Type = 46	8	—
AAS beam index	6	—
Reserved	2	Shall be set to zero.
}	—	—

AAS beam index

This index shall correspond to the direction to which the AAS beam is pointing during the AAS_DLFP() preferred by the SS (see 8.4.4.7).

For systems supporting mobility, the parameter “Allow AAS Beam Select Messages” in the UCD channel encoding TLV messages can be configured to indicate that these messages should not be sent by any MS, and the default value of “Allow AAS Beam Select Messages” is 1.

6.3.2.3.37 DREG-REQ (SS deregistration request) message

An SS may send a DREG-REQ message to a BS in order to notify the BS of SS deregistration from normal operation service from the BS. The format of the message is shown in Table 109.

Table 109—DREG-REQ message format

Syntax	Size (bit)	Notes
DREG-REQ message format() {	—	—
Management Message Type = 49	8	—
De-registration_Request_Code	8	0x00 = SS deregistration request from BS and network 0x01 = Request for MS deregistration from serving BS and initiation of MS idle mode 0x02 = Response for the Unsolicited MS deregistration initiated by the BS. 0x03 = Reject for the unsolicited DREG-CMD with action code 0x05 (idle mode request) by the BS. This code is applicable only when MS has a pending UL data to transmit. 0x04–0xFF = *Reserved*
TLV encoded parameters	*variable*	—
}	—	—

An SS shall generate DREG-REQ messages including the following parameters:

De-registration_Request_Code
Request code identifying the type of deregistration request:

0x00 = SS deregistration request from BS and network
0x01 = MS request for deregistration from serving BS and initiation of idle mode
0x02 = MS response for the unsolicited deregistration initiated by BS
0x03–0xFF = *Reserved*

The DREG-REQ message shall include the following parameter encoded as a TLV tuple if authentication is supported:

HMAC/CMAC Tuple (see 11.1.2)
The HMAC/CMAC Tuple shall be the last attribute in the message.

The MS shall include the following parameters in the DREG-REQ message only if the De-Registration_Request_Code parameter = 0x01:

Paging Cycle Request
PAGING_CYCLE requested by the MS

Idle Mode Retain Information
MS request for paging controller retention of network reentry-related MAC management message MS service and operational information to expedite future network reentry from idle mode. For each Bit location, a value of 0 indicates the information associated with the specified

MAC management message is not requested to be retained and managed, a value of 1 indicates the information is requested to be retained and managed.

Bit 0: Retain MS service and operational information associated with SBC-REQ/RSP messages.
Bit 1: Retain MS service and operational information associated with PKM-REQ/RSP messages.
Bit 2: Retain MS service and operational information associated with REG-REQ/RSP messages.
Bit 3: Retain MS service and operational information associated with Network Address.
Bit 4: Retain MS service and operational information associated with Time of Day.
Bit 5: Retain MS service and operational information associated with TFTP messages.
Bit 6: MS state information (see 11.14).
Bit 7: Consider Paging Preference of each service flow in resource retention. Bit 7 is meaningful when Bit 2 and Bit 6 have a value of 1. If Bit 2, Bit 6, and Bit 7 is 1, MS service and operational information associated with MS state information (see 11.14) is retained for service flows with positive Paging Preference. If Bit 2 and Bit 6 are 1 and Bit 7 is 0, MS service and operational information associated with MS State information (see 11.14) is retained for all service flows.

The MS may include the following parameters in the DREG-REQ message only if the De-registration_Request_ Code parameter = 0x01:

MAC Hash Skip Threshold
Maximum number of successive MOB_PAG-ADV messages that may be sent from a BS individual notification for an MS, including MS MAC address hash of an MS for which the action code is 0b00 (No Action Required).

6.3.2.3.38 HARQ MAP message

This subclause describes the HARQ MAP message, which is designed for hybrid automatic repeat request (HARQ) enabled SS. This IE shall only be used by a BS supporting HARQ, for SS supporting HARQ.

6.3.2.3.38.1 HARQ MAP message format

The HARQ MAP message format is presented in Table 110. This message includes Compact DL/UL-MAP IE and defines the access information for the DL and UL burst of HARQ-enabled SS. This message shall be sent without a generic MAC header.

BS may broadcast multiple HARQ MAP messages using multiple bursts after the MAP message. Each HARQ MAP message shall have a different modulation and coding rate.

The DL-MAP IEs in the MAP message describe the location and coding and modulation schemes of the bursts. The order of DL-MAP IEs in the MAP message and the bursts for HARQ MAP messages is determined by the coding and modulation scheme of the burst. The burst for HARQ MAP message with lower rate coding and modulation should be placed before other bursts for HARQ MAP message.

The presence of the HARQ MAP message format is indicated by the contents of the 3 MSBs of the first data byte of a burst. These bytes overlay the HT and EC bits of a generic MAC header. When these bits are both set to 1 (an invalid combination for a standard header) and followed by 1 bits of 1, the Compact DL-MAP format is present.

Table 110—HARQ MAP message format

Syntax	Size (bit)	Notes
HARQ_MAP message format() {	—	—
HARQ MAP Indicator = 111	3	Set to 0b111.
Compact UL_Map appended	1	—
Reserved	1	Shall be set to zero.
Map message length	9	Length of HARQ MAP in bytes.
DL IE count	6	Number of DL IE in the burst.
for (*i* = 0; *i* < DL IE count; *i*++){	—	—
Compact DL-MAP IE()	*variable*	—
}	—	—
If (Compact_UL-MAP appended == 1){	—	—
while (map data remains) {	—	—
Compact UL-MAP IE()	*variable*	—
}	—	—
}	—	—
if !(byte boundary) {	—	—
Padding nibble	4	—
}	—	—
}	—	—

HARQ MAP Indicator

The value of 0b111 means this message is a HARQ MAP Message.

Compact UL-MAP appended

A value of 1 indicates a compact UL-MAP is appended to the current compact DL-MAP data structure.

MAP message length

This value specifies the length of the HARQ MAP message beginning with the byte containing the HARQ MAP indicator and ending with the last byte of the HARQ MAP message. The length includes the computed 32-bit CRC value if the CRC appended indicator is on.

DL IE count

This field holds the number of IE entries in the following list of DL-MAP IEs.

A CRC-32 value is appended to the end of the HARQ MAP data. The CRC is computed across all bytes of the HARQ MAP starting with the byte containing the HARQ MAP indicator through the last byte of the map as specified by the Map message length field. The CRC calculation is the same as that used for standard MAC messages.

Table 111 and Table 112 represent the types of Compact DL/UL-MAP IE.

Table 111—Compact DL-MAP IE types

Compact DL-MAP Type	Description
0	Normal subchannel
1	Band AMC
2	Safety
3	DIUC
4	Format Configuration IE
5	HARQ ACK BITMAP IE
6	*Reserved*
7	Extension

Table 112—Compact UL-MAP IE types

Compact UL-MAP Type	Description
0	Normal subchannel
1	Band AMC
2	Safety
3	UIUC
4	HARQ Region IE
5	CQI Region IE
6	*Reserved*
7	Extension

6.3.2.3.38.2 Format Configuration IE

Table 113 represents the format of Format Configuration IE that configures CID type, safety pattern, maximum logical bands, and frame structure. The format should be set to default value at the start of each frame.

Table 113—Format Configuration IE

Syntax	Size (bit)	Notes
Compact_DL-MAP_IE( ) {	—	—
DL-MAP Type = 4	3	Format Configuration IE

Table 113—Format Configuration IE *(continued)*

Syntax	Size (bit)	Notes
New Format Indication	1	0 = Use the format configured by the latest Format Configuration IE 1 = New format
if (New Format Indication == 1) {	—	—
CID Type	2	0b00 = Normal CID 0b01 = RCID11 (default) 0b10 = RCID7 0b11 = RCID3
Safety Pattern	5	—
Subchannel type for Band AMC	2	See band AMC specification (8.4.6.3). 0b00 = Default type (default) 0b01 = 1 bin × 6 symbols type 0b10 = 2 bin × 3 symbols type 0b11 = 3 bin × 2 symbols type
Max Logical Bands	2	0 = 3 bands 1 = 6 bands 2 = 12 bands (default) 3 = 24 bands
No. Symbols for Broadcast	5	No. Symbol, (default = 0)
No. Symbols for DL Band AMC	6	No. Symbol, (default = 0)
No. Symbols for UL Band AMC	6	No. Symbol, (default = 0)
}	—	—
}	—	—

New Format Indication

If this value set to 0, the format shall be configured by the latest Format Configuration IE in the previous frames. Otherwise, all parameters in Format Configuration IE shall be configured. The configured parameters are valid for the following Compact DL/UL-MAP IE. At the start of each frame, all parameters are set to default values.

CID Type

This value specifies CID type used in the Compact DL/UL-MAP IE.

Safety Pattern

If this value is less than 16, the number of safety bins is 12 and the indices of allocated bins for safety are $16m+x$, where x is the value of safety pattern and $m = 0 \ldots 11$. If this value is from 16 to 31, the number of safety bins is 24 and the indices of allocated bins for safety are $16m+x'$ and $16m+(x'+8)$, where $x' = x - 16$ and $m = 0 \ldots 11$. If the safety pattern exists, it should be always allocated first. The safety pattern is valid in the region of AMC zone only. If safety pattern is set to all ones, safety channel is disabled.

Subchannel Type for Band AMC

This value specifies the subchannel type for band AMC subchannel. See related PHY specification.

No. Symbols for Broadcast

This field specifies the number of symbols allocated for Broadcast symbol region. The Broadcast symbols shall be allocated at the end of the DL subframe. The number of symbols is counted from the last symbol of the DL subframe. The PermBase for this broadcast symbol region shall be set to 0.

No. Symbols for DL Band AMC

This specifies the number of symbols allocated for DL band AMC symbol region. The symbols for band AMC shall be allocated before the broadcast symbol region. The other DL symbols excluding the symbols for Broadcast and DL Band are allocated for the DL Normal subchannel. PermBase for DL band AMC is the same as one for normal subchannels region.

No. Symbols for UL Band AMC

This specifies the number of symbols allocated for UL band AMC symbol region. The symbols for UL band AMC shall be allocated at the end of the UL subframe and the number of symbols are counted from the last symbol of the UL subframe. The other UL symbols excluding the symbols for UL Band are allocated for the UL Normal subchannel. PermBase for UL band AMC is the same as one for normal subchannels region.

Max Logical Bands

This value specifies the maximum number of logical bands for band AMC. The size of 3 fields (No. Selected Bands, Band BITMAP, and Band Index) in the DL/UL-MAP IE for Bands AMC depends on this value. Table 114 represents the fields in the DL/UL-MAP IE and specific values.

A logical band is a grouping of the AMC bands defined in 8.4.6.3. For example, three logical bands imply that logical band 0 is composed of AMC bands 0..15, logical band 1 is composed of AMC bands 16..31, and logical band 2 is composed of AMC bands 32...47. In general, if K = Max Logical Bands, then logical band $J = [0...(K–1)]$ contains physical bands $48/K \times J, 48/K \times J + 1, \ldots, 48/K \times (J + 1) – 1$.

Table 114—Field length for Band AMC MAP IE

Logical bands	24 Bands	12 Bands	6 Bands	3 Bands
Max Logical Bands	11	10	01	00
Nb-Band (# of bits for No. Selected Bands)	4 bits	4 bits	4 bits	0 bits
Nb-BITMAP (# of bits for Band BITMAP)	24 bits	12 bits	8 bits	4 bits
Nb-Index (# of bits for Band Index)	8 bits	4 bits	4 bits	0 bits

6.3.2.3.38.3 Reduced CID

Table 115 presents the format of reduced CID. BS may use reduced CID instead of basic CID or multicast CID to reduce the size of HARQ MAP message. The type of reduced CID is determined by BS considering the range of basic CIDs of SS connected with the BS and specified by the RCID_Type field of the Format Configuration IE.

The reduced CID is composed of 1 bit of prefix and n-bits of LSB of CID of SS. The prefix is set to 1 for the Broadcast CID or Multicast Polling CID and set to 0 for Basic CID. The reduced CID cannot be used instead of Transport, Primary Management, or Secondary Management CID. An exception to the above is when the multicast polling RCID is used in DL. If a DL CID decoded from a prefix 1 and RCID-11 is in the range of

the Multicast Polling CID (0xFF00–0xFFFD), then the DL CID shall be interpreted as a DL Transport CID by subtracting 0xFF (0xFFFD–0xFEFE).

Figure 37 shows the decoding of reduced CID when RCID 11 is used.

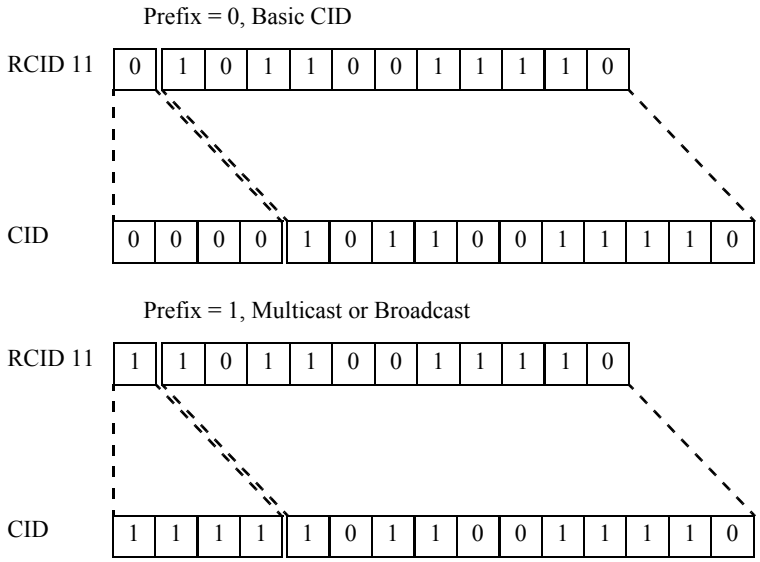

Figure 37—Reduced CID decoding

Table 115—RCID IE format

Syntax	Size (bit)	Notes
RCID_IE() {	—	—
if (RCID_Type == 0) {	—	RCID_Type is specified in Format Configuration IE
CID	16	Normal CID
} else {	—	—
Prefix	1	For multicast, AAS, Padding, and broadcast burst temporary disable RCID
if (Prefix == 1){	—	—
RCID 11	11	11 LSBs of Multicast, AAS, or Broadcast CID
} else {	—	—
if (RCID_Type == 1) {	—	—
RCID 11	11	11 LSBs of Basic CID
} else if (RCID_Type == 2) {	—	—
RCID 7	7	7 LSBs of Basic CID
} else if (RCID_Type == 3) {	—	—
RCID 3	3	3 LSBs of Basic CID

Table 115—RCID IE format *(continued)*

Syntax	Size (bit)	Notes
}	—	—
}	—	—
}	—	—
}	—	—

CID
Normal 16 bits connection identifier.

Prefix
A value of 1 indicates that 11 bits RCID for broadcast and multicast follows the prefix. Otherwise, the n-bits RCID for Basic CID follows the prefix. The value of n is determined by the RCID_Type field in Format Configuration IE.

RCID n
n-bits LSB of CID. If the DL CID decoded from a prefix 1 and RCID 11 is in the range of the Multicast Polling CID (0xFF00–0xFFFD), then the DL CID shall be interpreted as a DL Transport CID by subtracting 0xFF (0xFFFD–0xFEFE).

6.3.2.3.38.4 HARQ Control IE

The format of HARQ Control IE, which includes encoding/decoding information for HARQ-enabled DL/UL bursts, is presented in the MAC frame. See Table 116. This IE shall be located in the compact DL/UL-MAP IE.

Table 116—HARQ Control IE format

Syntax	Size (bit)	Notes
HARQ_Control_IE()	—	—
Prefix	1	0 = Temporarily disable HARQ 1 = Enable HARQ
if (Prefix == 1) {	—	—
AI_SN	1	HARQ ID Seq. No
SPID/*Reserved*	2	Subpacket ID when IR is defined by the FEC mode, otherwise reserved (encoded 0b00)
ACID	4	HARQ CH ID
} else {	—	—
Reserved	3	Shall be set to zero
}	—	—
}	—	—

Prefix
Indicates whether HARQ is enabled.

AI_SN
The HARQ identifier sequence number. This is toggled between 0 and 1 on successfully transmitting each encoder packet with the same ARQ channel.

SPID
The HARQ subpacket identifier, which is used to identify the four subpackets generated from an encoder packet. The SPID field only applies to FEC modes supporting incremental redundancy.

ACID
The HARQ channel identifier, which is used to identify HARQ channels. Each connection can have multiple HARQ channels, each of which may have an encoder packet transaction pending.

6.3.2.3.38.5 CQICH Control IE

The format of CQICH Control IE is presented in Table 117. The specific reporting value shall follow the directions indicated in the latest CQICH Allocation IE (8.4.5.4.11).

Table 117—CQICH Control IE format

Syntax	Size (bit)	Notes
CQICH_Control_IE() {	—	—
CQICH indicator	1	If the indicator is set to 1, the CQICH Control IE follows.
if (CQICH indicator == 1) {	—	—
Allocation Index	6	Index to the channel in a frame the CQI report should be transmitted by the MS.
Period (p)	2	A CQI feedback is transmitted on the CQI channels indexed by the (CQI Channel Index) by the MS in every 2^p frames.
Frame offset	3	The MS starts reporting at the frame of which the number has the same 3 LSBs as the specified frame offset. If the current frame is specified, the MS should start reporting in 8 frames.
Duration (d)	4	A CQI feedback is transmitted on the CQI channels indexed by the (CQI Channel Index) by the MS for $2^{(d-1)}$ frames. If d is 0b0000, deallocates all CQI feedback. If *d* is 0b1111, the MS should report until the BS command for the MS to stop.
} else {	—	—

Table 117—CQICH Control IE format *(continued)*

Syntax	Size (bit)	Notes
CQI reporting threshold	3	A threshold used by an MS to report its CINR using CQI channel. If 0b000, this threshold is neglected. SS shall treat these bits as reserved and shall be set to zero.
}	—	—
}	—	—

Allocation Index

Indicates its position from the start of the CQICH region.

Period

Informs the SS of the period of CQI reports.

Frame offset

Informs the SS of when to start. The SS starts reporting at the frame of which the number has the same 3 LSB as the specified frame offset. If the current frame is specified, the SS should start reporting in 8 frames.

Duration

Indicates when the SS should stop reporting unless the CQICH allocation is refreshed beforehand. If duration d == 0b0000, the BS is intended to deallocate the CQICH. If d == 0b1111, the CQICH is allocated indefinitely and the SS should report until the BS commands the SS to stop, which happens it receives another MAP IE with d = 0b0000.

CQI reporting threshold

Used by the MS to determine whether it reports current channel measurement through CQI channel if allocated in the future. See Table 118. If the value is set to 0b000, this threshold is inactive afterwards; otherwise it is activated. SS shall treat these bits as reserved and shall be set to zero.

Table 118—Threshold values

Value (binary)	CINR (dB)
000	CQT inactivated
001	–6.0
010	–4.0
011	–2.0
100	–0.0
101	2.0
110	4.0
111	6.0

6.3.2.3.38.6 Compact DL-MAP IE

6.3.2.3.38.6.1 Compact DL-MAP IE for normal subchannel

The format of Compact DL-MAP IE for normal subchannel is presented in Table 119. The direction of slot allocation for DL is along with the subchannel index first and then the symbol index. The direction of data mapping shall be according to 8.4.3.4.

Table 119—HARQ Compact DL-MAP IE format for normal subchannel

Syntax	Size (bit)	Notes
Compact_DL-MAP_IE() {	—	—
DL-MAP Type = 0	3	—
UL-MAP append	1	—
RCID_IE	*variable*	—
if (HARQ mode = 0) {	—	—
N_{EP} **code**	4	Code of encoder packet bits (see 8.4.9.2.3.5)
N_{SCH} **code**	4	Code of allocated subchannels (see 8.4.9.2.3.5)
} else if (HARQ mode = 1) {	—	—
Shortened DIUC	3	Shortened DIUC
Companded SC	5	Code of allocated subchannels (see 8.4.9.7)
}	—	—
HARQ_Control_IE	*variable*	—
CQICH_Control_IE	*variable*	—
if (UL-MAP append) {	—	—
if (HARQ mode = 0) {	—	CTC IR
N_{EP} **code for UL**	4	Code of encoder packet bits (see 8.4.9.2.3.5)
N_{SCH} **code for UL**	4	Code of allocated subchannels (see 8.4.9.2.3.5)
}else if (HARQ mode = 1) {	—	Generic Chase
Shortened UIUC	3	Shortened UIUC
Companded SC	5	Code of allocated subchannels (see 8.4.9.7)
}	—	—
HARQ_Control_IE for UL	*variable*	—
}	—	—
}	—	—

DL-MAP Type
The DL-MAP Type value specifies the type of the Compact DL-MAP IE. A value of 0 indicates the Normal Subchannel.

UL-MAP append
A value of 1 indicates the UL access information is appended to the end of the DL-MAP IE.

RCID_IE
Represent the assignment of the IE.

N_{EP} code, N_{SCH} code
The combination of N_{EP} code and N_{SCH} code indicates the number of allocated subchannels and scheme of coding and modulation for the DL burst.

Shortened DIUC
A shortened version of the DIUC. The shortened DIUC takes on values 0..7 of the DIUC as defined in the DCD. See 8.4.5.3.1.

Companded SC
The Companded SC indicates the number of allocated subchannels.

N_{EP} code for *UL*, N_{SCH} code for UL
The combination of N_{EP} code and N_{SCH} code indicates the number of allocated subchannels and scheme of coding and modulation for the UL burst.

Shortened UIUC
A shortened version of the UIUC. The shortened UIUC takes on values 1..8 of the UIUC as defined in the UCD. See 8.4.5.4.1.

Companded SC
The Companded SC indicates the number of allocated subchannels.

6.3.2.3.38.6.2 Compact DL-MAP IE for band AMC subchannel

Slots for DL AMC zone are allocated along the subchannel index first within a band. The direction of data mapping for DL AMC zone slots shall be frequency first (across bands when multiple bands are allocated). The format of Compact DL-MAP IE for band AMC subchannel is presented in Table 120.

Table 120—HARQ Compact DL-MAP IE format for band AMC

Syntax	Size (bit)	Notes
Compact_DL-MAP_IE() {	—	—
DL-MAP Type = 1	3	—
Reserved	1	Shall be set to zero
RCID_IE	*variable*	—
if (HARQ mode = 0) {	—	CTC IR
N_{EP} code	4	Code of encoder packet bits (see 8.4.9.2.3.5)
N_{SCH} code	4	Code of allocated subchannels (see 8.4.9.2.3.5)

Table 120—HARQ Compact DL-MAP IE format for band AMC *(continued)*

Syntax	Size (bit)	Notes
} else if (HARQ mode = 1) {	—	Generic Chase
Shortened DIUC	3	Shortened DIUC
Companded SC	5	Code of allocated subchannels (see 8.4.9.7)
}	—	—
Nband	Nb-Band	Number of bands, 0 = use BITMAP instead
if (Nband == 0) {	—	—
Band BITMAP	Nb-BITMAP	*n*-th LSB is 1 if *n*-th band is selected
} else {	—	—
for (*i* = 0; i < Nband; *i*++)	—	—
Band Index	Nb-Index	Band selection
}	—	—
Allocation Mode	2	Indicates the subchannel allocation mode. 0b00 = same number of subchannels for the selected bands 0b01 = different number of subchannels for the selected bands 0b10 = total number of subchannels for the selected bands determined by N_{SCH} code and N_{EP} code 0b11 = *Reserved*
Reserved	2	Shall be set to zero
if (Allocation Mode == 00){	—	—
No. Subchannels	8	—
} else if (Allocation Mode == 01){	—	—
for (*i* = 0; *i* < band count; *i*++)	—	If Nband is 0, band count is the number of "1" in Band BITMAP. Otherwise band count is Nband
No. Subchannels	8	—
}	—	—
HARQ_Control_IE	*variable*	—
CQICH_Control_IE	*variable*	—
}	—	—

DL-MAP Type

The DL-MAP Type value specifies the type of the Compact DL-MAP IE. A value of 1 indicates the band AMC subchannel.

RCID_IE

Represents the assignment of the IE.

N_{EP} code, N_{SCH} code

The combination of N_{EP} code and N_{SCH} code indicates the number of allocated subchannels and scheme of coding and modulation for the DL burst.

Shortened DIUC

A shortened version of the DIUC. The shortened DIUC takes on values 0..7 of the DIUC as defined in the DCD. See 8.4.5.3.1.

Companded SC

The Companded SC indicates the number of allocated subchannels.

Nband

Indicates the number of bands selected for the burst. If this value is set to 0, the Band BITMAP is used to indicate the number and the position of selected bands instead. The number of the maximum logical bands determines the length of this field.

Band BITMAP

The Band BITMAP is valid when Nband is 0. The *n*-th LSB of the Band BITMAP is set to 1 when the *n*-th logical band is selected for the burst. If the number of the maximum logical bands is 12, then the length of the Band BITMAP is 12 bits. The band count is set to the number of ones in the Band BITMAP. The number of the maximum logical bands determines the length of this field.

Band Index

The Band Index value indexes the selected band offset and is valid when Nband is larger than 0. The number of the maximum logical bands determines the length of this field.

Allocation Mode

The Allocation Mode value indicates the subchannel allocation mode in the selected bands. The value is set to 0 when the same numbers of subchannels are allocated in the selected bands by the No. Subchannels field. The value is set to 0b01 when different numbers of subchannels are allocated in each of the selected bands by the following No. Subchannels fields. The value is set to 0b10 when the total number of subchannels allocated in the selected bands is defined by N_{SCH} code and N_{EP} code. The subchannels fill from the bands with lowest index.

No. Subchannels

The No. Subchannels value indicates the number of subchannels allocated for this burst.

6.3.2.3.38.6.3 Compact DL-MAP IE for safety subchannel

The format of Compact DL-MAP IE for safety subchannel is presented in Table 121.

Table 121—HARQ Compact DL-MAP IE format for safety

Syntax	Size (bit)	Notes
Compact_DL-MAP_IE() {	—	—
DL-MAP Type = 2	3	—
UL-MAP append	1	—
RCID_IE	*variable*	—

Table 121—HARQ Compact DL-MAP IE format for safety *(continued)*

Syntax	Size (bit)	Notes
if (HARQ mode = 0) {	—	CTC IR
N_{EP} code	4	Code of encoder packet bits (see 8.4.9.2.3.5)
N_{SCH} code	4	Code of allocated subchannels (see 8.4.9.2.3.5)
} else if (HARQ mode = 1) {	—	Generic Chase
Shortened DIUC	3	Shortened DIUC
Companded SC	5	Code of allocated subchannels (see 8.4.9.7)
}	—	—
BIN offset	8	—
HARQ_Control_IE	*variable*	—
CQICH_Control_IE	*variable*	—
if (UL-MAP append) {	—	—
if (HARQ mode = "CTC IR") {	—	—
N_{EP} code for UL	4	Code of encoder packet bits (see 8.4.9.2.3.5)
N_{SCH} code for UL	4	Code of allocated subchannels (see 8.4.9.2.3.5)
}else if (HARQ mode = "Generic") {	—	—
ShortenedUIUC	3	Shortened UIUC
Companded SC	5	Code of allocated subchannels (see 8.4.9.7)
}	—	—
BIN offset for UL	8	—
HARQ_Control_IE for UL	*variable*	—
}	—	—
}	—	—

DL-MAP Type

The DL-MAP Type value specifies the type of the Compact DL-MAP IE. A value of 2 indicates the safety subchannel.

RCID_IE

Represent the assignment of the IE.

N_{EP} code, N_{SCH} code

The combination of N_{EP} code and N_{SCH} code indicates the number of allocated subchannels and scheme of coding and modulation for the DL burst.

Shortened DIUC

A shortened version of the DIUC. The shortened DIUC takes on values 0..7 of the DIUC as defined in the DCD. See 8.4.5.3.1.

Companded SC
The Companded SC indicates the number of allocated subchannels.

BIN Offset
The offset of the BIN allocated for this DL burst. See appropriate specification.

N_{EP} code for UL, N_{SCH} code for UL
The combination of N_{EP} code and N_{SCH} code indicates the number of allocated subchannels and scheme of coding and modulation for the UL burst.

Shortened UIUC
A shortened version of the UIUC. The shortened UIUC takes on values 1..8 of the UIUC as defined in the UCD. See 8.4.5.4.1.

Companded SC
The Companded SC indicates the number of allocated subchannels.

BIN Offset for UL
The offset of the BIN allocated for this UL burst. See appropriate specification.

6.3.2.3.38.6.4 Compact DL-MAP IE for DIUC subchannel

The format of Compact DL-MAP IE for DIUC subchannel is presented in Table 122.

Table 122—HARQ Compact DL-MAP IE format for DIUC subchannel

Syntax	Size (bit)	Notes
Compact_DL-MAP_IE() {	—	—
DL-MAP Type = 3	3	—
Reserved	1	Shall be set to zero
DIUC	4	—
if (DIUC == 15) {	—	—
DL_Extended_IE()	*variable*	See 8.4.5.3.2 and 8.4.5.3.2.1
} else {	—	—
RCID_IE	*variable*	—
No. Subchannels	8	The number of subchannels allocated by the IE
Repetition coding indication	2	0b00 – No repetition coding 0b01 – Repetition coding of 2 used 0b10 – Repetition coding of 4 used 0b11 – Repetition coding of 6 used
Reserved	2	Shall be set to zero
}	—	—

Table 122—HARQ Compact DL-MAP IE format for DIUC subchannel *(continued)*

Syntax	Size (bit)	Notes
H-ARQ_Control_IE	*variable*	—
CQICH_Control_IE	*variable*	—
}	—	—

DL-MAP Type
This value specifies the type of the Compact DL-MAP IE. A value of 3 indicates the DIUC type.

DIUC
This value indicates the usage of this burst.

RCID_IE
Represent the assignment of the IE.

No. Subchannels
This value indicates the number of subchannels allocated by the IE.

Repetition coding indication
Indicates the repetition code used inside the allocated burst.

6.3.2.3.38.6.5 Compact DL-MAP IE for HARQ ACK bitmap

The HARQ ACK bitmap information for the HARQ-enabled UL bursts is delivered through the Compact DL-MAP IE as shown in Table 123. The bit position in the bitmap is determined by the order of the HARQ-enabled UL bursts in the UL-MAP. The frame offset between the UL burst and the HARQ ACK bitmap is specified by HARQ_ACK_Delay For UL Burst field in the DCD message.

For example, when an SS transmits a HARQ-enabled burst at *i*-th frame and the burst is *j*-th HARQ-enabled burst in the MAP, the SS would receive HARQ ACK at *j*-th LSB of the bitmap, which is sent by the BS at *i*+(frame offset)-th frame. If the HARQ ACK bitmap is omitted, the HARQ-enabled SS shall retain the transmitted HARQ burst and retransmit it when the BS requests retransmission with HARQ Control IE.

Table 123—HARQ Compact DL-MAP IE format for HARQ bitmap

Syntax	Size (bit)	Notes
Compact_DL-MAP_IE() {	—	—
DL-MAP Type = 5	3	—
Reserved	1	Shall be set to zero
BITMAP Length	4	Length in bytes
BITMAP	*variable*	—
}	—	—

DL-MAP Type
Defines the type of Compact DL-MAP. If the type value is 5, the Compact DL-MAP is for HARQ-ACK-BITMAP.

BITMAP Length
Specifies the length of the following BITMAP field.

BITMAP
Includes HARQ ACK information for HARQ-enabled UL bursts. The size of BITMAP shall be equal or larger than the number of HARQ-enabled UL bursts. The *j*-th HARQ-enabled burst in the UL-MAP is corresponding to the *j*-th LSB in the BITMAP.

Whenever HARQ-enabled UL-SDMA allocations are made within a frame, the ACK BITMAP Length shall be large enough to carry the ACKs for both the SDMA and non-SDMA allocations. Also, the ACKs for the SDMA users allocated on the second layer shall be appended to the ACKs for the non-SDMA and first-layer SDMA users.

6.3.2.3.38.6.6 Compact DL-MAP IE for extension

The format of Compact DL-MAP IE for extension is presented in Table 124.

Table 124—HARQ Compact DL-MAP IE format for extension

Syntax	Size (bit)	Notes
Compact_DL-MAP_IE() {	—	—
DL-MAP Type = 7	3	—
DL-MAP subtype	5	Extension subtype
Length	4	Length of the IE in bytes
Payload	*variable*	Subtype dependent payload
}	—	—

DL-MAP Type
This value specifies the type of the Compact DL-MAP IE. A value of 7 indicates the extension type.

DL-MAP Subtype
This value specifies the subtype of the Compact DL-MAP IE.

Length
This indicates the length of this IE in bytes. If an SS cannot recognize the DL-MAP Subtype, it skips the IE.

Payload
The payload depends on the value of DL-MAP Subtype (see Table 125). The length of payload is Length – 1 bytes.

Table 125—DL-MAP subtypes

DL-MAP subtype	Description
0	TimeDiversity_MBS
1	Switch HARQ mode
2–31	*Reserved*

6.3.2.3.38.6.7 MIMO Compact DL-MAP IE format

When MIMO-enabled DL burst are present within a frame, they shall be allocated before non-MIMO DL burst in both diversity and AMC zones. Figure 38 exemplifies the DL HARQ subframe structure, where the optional MIMO midamble is shown and 2x3 AMC type is depicted. Both MIMO diversity and MIMO AMC zones shall contain even number of symbols. For any remaining physical resources for each zone, padding subchannels shall be allocated to the region.

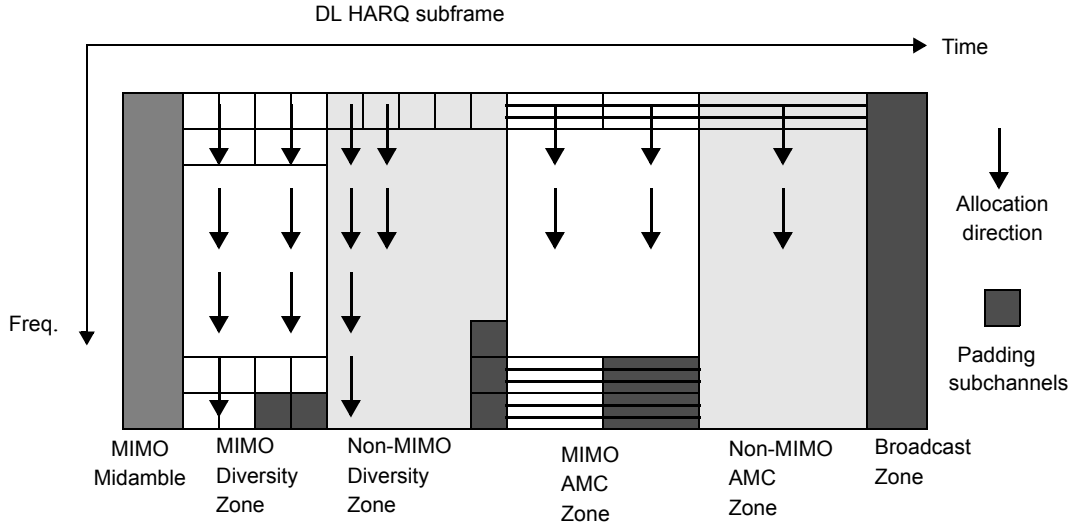

Figure 38—DL HARQ subframe structure

Each MIMO-enabled DL burst shall be first allocated by the regular Compact DL-MAP IE for diversity subchannels (see Table 116) and AMC subchannels (see Table 117), followed by the extended MIMO Compact DL-MAP IE. The format of MIMO Compact DL-MAP IE is presented in Table 126. This extended IE shall follow right after the basic allocation IE for each MIMO-enabled DL burst.

Table 126—MIMO Compact DL-MAP IE

Syntax	Size (bit)	Notes
MIMO_Compact_DL-MAP_IE() {	—	—
Compact DL-MAP Type	3	Type = 7
DL-MAP Subtype	5	MIMO = 0x01
Length	4	Length of the IE in bytes
Mode Change	1	Indicates change of MIMO mode 0b0 = No change from previous allocation 0b1 = Change of MIMO mode
Antenna Grouping/Selection	1	Application of antenna grouping/selection to the burst 0b0 = Not applied 0b1 = AG/AS applied
Codebook based Precoding	1	Application of codebook based precoding to the burst 0b0 = Not applied 0b1 = Codebook-based precoding applied
N_layer	2	Number of multiple coding/modulation layers 0b00 – 1 layer 0b01 – 2 layers 0b10 – 3 layers 0b11 – 4 layers
if(Mode Change == 1){	—	—
Mt	2	Indicates number of STC output streams 0b00 = 1 stream 0b01 = 2 streams 0b10 = 3 streams 0b11 = 4 streams
If (N_Layer == 0b00) {	—	—
If (Mt == 0b01){	—	—
Matrix	2	Indicates transmission matrix (see 8.4.8) 0b00 = Matrix A (Tx Diversity) 0b01 = Matrix C (Vertical Encoding) 0b10–11 = *Reserved*
} elseif (Mt == 0b10 || Mt == 10b1){	—	—
Matrix	2	Indicates transmission matrix (see 8.4.8) 0b00 = Matrix A (Tx Diversity) 0b01 = Matrix B (Vertical Encoding) 0b10 = Matrix C (Vertical Encoding) 0b11 = *Reserved*
}	—	—
} elseif (N_Layer == 0b01) {	—	—

Table 126—MIMO Compact DL-MAP IE *(continued)*

Syntax	Size (bit)	Notes
If (Mt == 01){	—	—
Matrix	2	—
} elseif (Mt == 10 || Mt == 11){	—	—
Matrix	2	Indicates transmission matrix (see 8.4.8) 0b00 = Matrix B (Horizontal Encoding) 0b01–11 = *Reserved*
}	—	—
} elseif (N_Layer == 0b10) {	—	—
if (Mt == 10|| Mt == 0b11){	—	—
Matrix	2	Indicates transmission matrix (see 8.4.8) 0b00 = Matrix C (Horizontal Encoding) 0b01–11 = *Reserved*
}	—	—
} elseif (N_Layer == 0b11) {	—	—
if (Mt == 0b11){	—	—
Matrix	2	Indicates transmission matrix (see 8.4.8) 0b00 = Matrix C (Horizontal Encoding) 0b01–11 = *Reserved*
}	—	—
}	—	—
if (Antenna Grouping/Selection == 1) {	—	—
If (N_Layer == 0b00) {	—	—
If (Mt == 0b10){	—	—
Antenna Grouping/Selection Index	4	Indicates the index of antenna grouping/ selection. See 8.4.8.3.4 and 8.4.8.3.5. 0b0000 = A1 0b0001 = A2 (Vertical Encoding) 0b0010 = A3 (Vertical Encoding) 0b0011 = B1 (Vertical Encoding) 0b0100 = B2 (Vertical Encoding) 0b0101 = B3 (Vertical Encoding) 0b0110–111 = *Reserved*
} elseif (Mt == 11){	—	—

Table 126—MIMO Compact DL-MAP IE *(continued)*

Syntax	Size (bit)	Notes
Antenna Grouping/Selection Index	4	Indicates the index of antenna grouping/ selection. See 8.4.8.3.4 and 8.4.8.3.5. 0b0000 = A1 0b0001 = A2 0b0010 = A3 0b0011 = B1 (Vertical Encoding) 0b0100 = B2 (Vertical Encoding) 0b0101 = B3 (Vertical Encoding) 0b0110 = B4 (Vertical Encoding) 0b0111 = B5 (Vertical Encoding) 0b1000 = B6 (Vertical Encoding) 0b1001–111 = *Reserved*
}	—	—
} elseif (N_Layer == 0b01) {	—	—
If (Mt == 0b10){	—	—
Antenna Grouping/Selection Index	4	Indicates the index of antenna grouping/ selection. See 8.4.8.3.4 and 8.4.8.3.5. 0b0000 = B1 (Horizontal Encoding) 0b0001 = B2 (Horizontal Encoding) 0b0010 = B3 (Horizontal Encoding) 0b0011–111 = *Reserved*
} elseif (Mt == 0b11){	—	—
Antenna Grouping/Selection Index	4	Indicates the index of antenna grouping/ selection. See 8.4.8.3.4 and 8.4.8.3.5. 0b0000 = B1 (Horizontal Encoding) 0b0001 = B2 (Horizontal Encoding) 0b0010 = B3 (Horizontal Encoding) 0b0011 = B4 (Horizontal Encoding) 0b0100 = B5 (Horizontal Encoding) 0b0101 = B6 (Horizontal Encoding) 0b0110–111 = *Reserved*
}	—	—
}	—	—
}	—	—
if (Codebook based precoding == 1) {	—	—
Codebook based precoding Index	6	Indicates the index of precoding Matrix W in the codebook. See 8.4.8.3.6.
}	—	—
}	—	—
for (j = 1; j < N_layer + 1; j++) {	—	This loop specifies the N_{EP}/DIUC for layers 2 and above when required for STC. The same N_{SCH} and RCID applied for each layer.
if (HARQ Mode = CTC Incremental Redundancy) {	4	HARQ mode is specified in the HARQ Compact DL-MAP IE format for switch HARQ mode.

Table 126—MIMO Compact DL-MAP IE *(continued)*

Syntax	Size (bit)	Notes
N_{EP}	4	—
} Else if (HARQ Mode = Generic Chase) {	—	—
DIUC	4	—
}	—	—
if (CQICH indicator == 1) {	—	CQICH indicator comes from the preceding Compact DL-MAP IE.
Allocation Index[1]	6	Index to CQICH assigned to this layer.
}	—	—
}	—	—
if (CQICH indicator == 1) {	2	The number of additional CQICHs allocated to this MS. (0 – 3)
CQICH_Num	2	The number of additional CQICHs allocated to this MS. (0 – 3)
for (*i* = 0; *i* < CQICH_Num; *i*++) {	—	—
Feedback_type	3	Type of contents on the additional CQICH from MS 0b000 = Fast DL measurement/Default Feedback with antenna grouping 0b001 = Fast DL measurement/Default Feedback with antenna selection 0b010 = Fast DL measurement/Default Feedback with reduced codebook 0b011 = Quantized precoding weight feedback 0b100 = Index to precoding matrix in codebook 0b101 = Channel Matrix Information 0b101 = Per stream power control 0b110–0b111 = *Reserved*
Allocation index	6	—
CQICH Usage	3	Indicates the usage of this CQICH 0b000 = 6-bit CQI (default) 0b001 = *Reserved* 0b010 = 3-bit CQI (even) 0b011 = 3-bit CQI(odd) 0b100 = 6-bit CQI (primary) 0b101 = 6-bit CQI (secondary) 0b110–0b111 = *Reserved*
}	—	—
}	—	—
Padding	*variable*	Padding to byte; shall be set to 0.
}	—	—

Matrix Indicator

This field indicates MIMO matrix for the burst.

Antenna Grouping/Selection Index

The Antenna Grouping/Selection Index field indicates antenna grouping/selection index for the current burst. For the actual description of the following matrices, see 8.4.8.3.4 and 8.4.8.3.5.

Allocation Index[1]

Indicates position from the start of the CQICH region.

The Feedback type of this CQICH shall be one of the three default types (type 0b000, 0b001, 0b010) according to the following rule:

Feedback type = 0b000 if ((Antenna Grouping/Selection == 1) and (matrix == A or B))

Feedback type = 0b001 if ((Antenna Grouping/Selection == 1) and (matrix == C))

Feedback type = 0b010 if ((Codebook-based precoding == 1))

Feedback Type

Indicates the type of feedback content on the allocated CQICH from MS. Its mapping shall be

0b000 = Fast DL measurement/Default Feedback with antenna grouping

0b001 = Fast DL measurement/Default Feedback with antenna selection

0b010 = Fast DL measurement/Default Feedback with reduced codebook

0b011 = Quantized precoding weight feedback

0b100 = Index to precoding matrix in codebook

0b101 = Channel Matrix Information

0b110 ~ 0b111 = *Reserved*

When the feedback type is either 0b000, 0b001, or 0b010, the MS shall transmit either the regular S/N measurement using the formula in 8.4.11.6 in its lower 32 codewords in 8.4.11.5 or the MIMO mode feedback of the specified type in its upper 32 codewords according to Table 524 in 8.4.11.8.

For each layer, a codeword shall be constructed according to 8.4.9.2.3.5 with the N_{EP} and N_{SCH} combination and mapped onto the corresponding layer. Multiple codewords from multiple layers shall be interpreted as one HARQ channel whose parameters are given in the preceding Compact DL-MAP IE.

At the receiver, an ACK shall be transmitted only when there is no CRC error detected on every layer. Otherwise, a NACK shall be transmitted.

SDMA transmissions may be allocated on the DL with the SDMA Compact DL-MAP IE (Table 127). Num_layer means the number of SDMA layers (2, 3, or 4) being allocated. For each SDMA layer, if the dedicated pilot bit is set to 1 in the STC Zone IE (8.4.5.3.4) for the zone in which the SDMA allocations are being made, Num_layer selects the pilot format for the burst by interpreting Num_layer as the number of Tx antennas (as defined in 8.4.8), and the MS with the first RCID shall be assigned the pilot pattern corresponding to antenna 1, of 8.4.8, the second to the pilot pattern corresponding to antenna 2, and so on.

Table 127—SDMA Compact DL-MAP IE format

Syntax	Size (bit)	Notes
SDMA_Compact_DL-MAP_IE() {	—	—
Compact DL-MAP Type	3	Type = 7
DL-MAP Subtype	5	SDMA = 0x03
Length	4	Length of the IE in bytes
Num_layers	2	Number of multiple coding/modulation layers: 0b00 = 1 layer 0b01 = 2 layers 0b10 = 3 layers 0b11 = 4 layers
Padding	2	Shall be set to zero.
for (*j* = 1; *j* < Number of Layers; *j*++) {	—	This loop specifies the N_{EP} for layers 2 and above when required for STC. The same N_{SCH} and RCID applied for each layer
RCID	*variable*	MS identifier for the current layer of the SDMA allocation
if (**HARQ Mode = CTC Incremental Redundancy**) { N_{EP} } elseif (**HARQ Mode = Generic Chase**) { DIUC }	4	HARQ mode is specified in the HARQ Compact DL-MAP IE format for switch HARQ mode
CQI Feedback_type	3	Type of contents on CQICH for this MS 0b000 = Default feedback 0b001 = Precoding weight Matrix W 0b010 = Channel Matrix H 0b011 = MIMO mode and permutation zone 0b100–0b111 = *Reserved*
CQICH_Num	2	Total number of CQICHs assigned to this MS is (CQICH_Num +1)
for (*i* = 1; *i* < CQICH_Num; *i*++) {	—	—
Allocation index	6	Index to uniquely identify the additional CQICH resources assigned to the MS
}		
Padding	*variable*	The padding bits are used to ensure the contents within each layer loop are an integer number of bytes. Shall be set to zero
}	—	—
}	—	—

6.3.2.3.38.6.8 HARQ Compact DL-MAP IE format for switch HARQ mode

In the HARQ-MAP, a BS may transmit DL-MAP Type = 7 with the Switch HARQ Mode IE. Allocations subsequent to this IE shall be for the HARQ mode identified. See Table 128.

Table 128—HARQ Compact DL-MAP IE format for switch HARQ mode

Syntax	Size (bit)	Notes
Compact_DL-MAP_IE() {	—	—
DL-MAP Type = 7	3	—
DL-MAP subtype	5	Extension subtype value = 1
Length	4	Length of the IE in bytes
HARQ mode	4	Subtype dependent payload
}	—	—

DL-MAP Type
The DL-MAP Type value specifies the type of the Compact DL-MAP IE. A value of 7 indicates the extension type.

DL-MAP Subtype
The DL-MAP Subtype value specifies the extended map type defined in Table 125 as HARQ mode switch.

Length
This indicates the length of this IE in bytes. This is encoded as 2.

HARQ mode
The HARQ mode is a 4-bit value that specifies the HARQ mode for all subsequent Compact DL-MAP IEs to the end of the current HARQ map. See 8.4.9.5 for encoding of this value.

6.3.2.3.38.6.9 HARQ Compact MBS MAP IE

The format for HARQ Compact MBS MAP IE for extension is presented in Table 129.

Table 129—HARQ Compact MBS MAP IE format for extension

Syntax	Size (bit)	Notes
Compact_MBS_MAP_IE() {	—	—
DL_MAP Type = 3	3	—
Multicast CID	12	12 LSBs of CID for multicast
MBS Zone Identifier	7	—
Macro diversity enhanced	1	—

Table 129—HARQ Compact MBS MAP IE format for extension *(continued)*

Syntax	Size (bit)	Notes
If (macro diversity enhanced = 1){	—	—
Permutation	2	—
Idcell	6	—
OFDMA Symbol Offset	8	OFDMA symbol offset with respect to start of the MBS portion
N_{EP} code	4	The combination of N_{EP} code and N_{SCH} code indicates the number of allocated subchannels and scheme of coding and modulation for the MBS_MAP message in MBS portion
N_{SCH} code	4	—
} else {	—	—
N_{EP}	4	The combination of N_{EP} code and N_{SCH} code indicates the number of allocated subchannels and scheme of coding and modulation for the DL burst
N_{SCH} code	4	—
AI_SN	1	—
SPID	2	—
ACID	4	—
Next MBS frame offset	8	The next MBS frame offset value is lower 8 bits of the frame number in which the BS shall transmit the next MBS frame
Next MBS OFDMA Symbol offset	8	The offset of the OFDMA symbol in which the next MBS portion starts, measured in OFDMA symbols from the beginning of the DL frame in which the MBS_MAP is transmitted
}	—	—
if !(byte boundary) {	—	—
Padding Nibble	*variable*	Padding to reach byte boundary
}	—	—
}	—	—

AI SN

The HARQ identifier sequence number. This is toggled between 0 and 1 on successfully transmitting each encoder packet with the same ARQ channel.

SPID

The HARQ subpacket identifier, which is used to identify the four subpackets generated from an encoder packet.

ACID

The HARQ channel identifier for TimeDiversity MBS packet. Each TimeDiversity MBS connection can have multiple ARQ channels, each of which may have an encoder packet transaction pending.

The MBS burst indicated by the HARQ Compact MBS MAP IE is encoded at the same way of HARQ. But it does not need the acknowledgement from MS.

6.3.2.3.38.7 Compact UL-MAP IE

6.3.2.3.38.7.1 Compact UL-MAP IE for normal subchannel

The format of Compact UL-MAP IE for normal subchannel is presented in Table 130. The direction of slot allocation and the direction of data mapping for UL shall be according to 8.4.3.4.

Table 130—HARQ Compact UL-MAP IE format for normal subchannel

Syntax	Size (bit)	Notes
Compact_UL-MAP_IE() {	—	—
UL-MAP Type = 0	3	—
Reserved	1	Shall be set to zero
RCID_IE	*variable*	—
if (HARQ mode = 0) {	—	CTC IR
N_{EP} **code**	4	Code of encoder packet bits (see 8.4.9.2.3.5)
N_{SCH} **code**	4	Code of allocated subchannels (see 8.4.9.2.3.5)
} else if (HARQ mode = 1) {	—	Generic Chase
Shortened UIUC	4	Shortened UIUC
Companded SC	4	Code of allocated subchannels (see 8.4.9.7)
}	—	—
HARQ_Control_IE	*variable*	—
}	—	—

UL-MAP Type

The UL-MAP Type value specifies the type of the Compact UL-MAP IE. A value of 0 indicates the normal subchannel.

RCID_IE

Represent the assignment of the IE.

N_{EP} code, N_{SCH} code

The combination of N_{EP} code and N_{SCH} code indicates the number of allocated subchannels and scheme of coding and modulation for the UL burst.

Shortened UIUC

A shortened version of the UIUC. The shortened UIUC takes on values 1..8 of the UIUC as defined in the UCD. See 8.4.5.4.1.

Companded SC

The Companded SC indicates the number of allocated subchannels.

6.3.2.3.38.7.2 Compact UL-MAP IE for band AMC subchannel

The format of Compact UL-MAP IE for band AMC subchannel is presented in Table 131. Slots for UL AMC zone are allocated along the symbol index first within a band. The direction of data mapping for UL AMC zone slots shall be frequency first (across bands when multiple bands are allocated).

Table 131—HARQ Compact UL-MAP IE format for band AMC

Syntax	Size (bit)	Notes
Compact_UL-MAP_IE() {	—	—
UL-MAP Type = 1	3	—
Reserved	1	Shall be set to zero
RCID_IE	*variable*	—
if (HARQ mode = 0) {	—	CTC IR
N_{EP} **code**	4	Code of encoder packet bits (see 8.4.9.2.3.5)
N_{SCH} **code**	4	Code of allocated subchannels (see 8.4.9.2.3.5)
} else if (HARQ mode = 1) {	—	Generic Chase
Shortened UIUC	3	Shortened UIUC
Companded SC	5	Code of allocated subchannels (see 8.4.9.7)
}	—	—
Nband	Nb-Band	Indicates the number of selected bands. 0 = BITMAP indicates the number and offset of selected bands
if (Nband == 0) {	—	—
Band BITMAP	Nb-BITMAP	*n*-th LSB is 1 if *n*-th band is selected
} else {	—	—
for (*i* = 0; *i* < Nband; *i*++)	—	—
Band Index	Nb-Index	Band selection
}	—	—

Table 131—HARQ Compact UL-MAP IE format for band AMC *(continued)*

Syntax	Size (bit)	Notes
Allocation Mode	2	Indicates the subchannel allocation mode. 00 = same number of subchannels for the selected bands 01 = different number of subchannels for the selected bands 10 = total number of subchannels for the selected bands determined by N_{SCH} code 11 = *Reserved*
Reserved	2	Shall be set to zero
if (Allocation Mode == 00){	—	—
No. Subchannels	8	—
} else if (Allocation Mode == 1){	—	—
for (*i* = 0; *i* < band count; *i*++)	—	If Nband is 0, band count is the number of "1" in Band BITMAP. Otherwise band count is Nband
No. Subchannels	8	—
}	—	—
HARQ_Control_IE	*variable*	—
}	—	—

UL-MAP Type

The UL-MAP Type value specifies the type of the Compact UL-MAP IE. A value of 1 indicates the band AMC subchannel.

RCID_IE

Represents the assignment of the IE.

N_{EP} code, N_{SCH} code

The combination of N_{EP} code and N_{SCH} code indicates the number of allocated subchannels and scheme of coding and modulation for the UL burst.

Shortened UIUC

A shortened version of the UIUC. The shortened UIUC takes on values 1..8 of the UIUC as defined in the UCD. See 8.4.5.4.1.

Companded SC

The Companded SC indicates the number of allocated subchannels.

Nband

Indicates the number of bands selected for the burst. If this value is set to 0, the Band BITMAP is used to indicate the number and the position of selected bands instead. The number of the maximum logical bands determines the length of this field.

Band BITMAP

The Band BITMAP is valid when Nband is 0. The n-th LSB of the Band BITMAP is set to 1 when the *n*-th logical band is selected for the burst. If the number of the maximum logical bands is 12, then the length of the Band BITMAP is 12 bits. The band count is set to the number of ones in the Band BITMAP. The number of the maximum logical bands determines the length of this field.

Band Index

The Band Index value indexes the selected band offset and is valid when Nband is larger than 0. The number of the maximum logical bands determines the length of this field.

Allocation Mode

The Allocation Mode value indicates the subchannel allocation mode in the selected bands. The value is set to binary 00 when the same numbers of subchannels are allocated in the selected bands by the No. Subchannels field. The value is set to 01 when different numbers of subchannels are allocated in each selected bands by the following No. Subchannels fields. The value is set to 0b10 when the total number of subchannels allocated in the selected bands is defined by N_{SCH} code and N_{EP} code. The subchannels fill from the bands with lowest index.

No. Subchannels

The No. Subchannels value indicates the number of subchannels allocated for this burst.

6.3.2.3.38.7.3 Compact UL-MAP IE for safety subchannel

The format of Compact UL-MAP IE for safety subchannel is presented in Table 132.

Table 132—HARQ Compact UL-MAP IE format for safety subchannel

Syntax	Size (bit)	Notes
Compact_UL-MAP_IE() {	—	—
UL-MAP Type = 2	3	—
Reserved	1	Shall be set to zero
RCID_IE	*variable*	—
if (HARQ mode = 0) {	—	CTC IR
N_{EP} code	4	Code of encoder packet bits (see 8.4.9.2.3.5)
N_{SCH} code	4	Code of allocated subchannels (see 8.4.9.2.3.5)
} else if (HARQ mode = 1) {	—	Generic Chase
Shortened UIUC	3	Shortened UIUC
Companded SC	5	Code of allocated subchannels (see 8.4.9.7)
}	—	—
BIN offset	8	—
HARQ_Control_IE	*variable*	—
}	—	—

UL-MAP Type
The UL-MAP Type value specifies the type of the Compact UL-MAP IE. A value of 2 indicates the safety subchannel.

RCID_IE
Represent the assignment of the IE.

N_{EP} code, N_{SCH} code
The combination of N_{EP} code and N_{SCH} code indicates the number of allocated subchannels and scheme of coding and modulation for the UL burst.

Shortened UIUC
A shortened version of the UIUC. The shortened UIUC takes on values 1..8 of the UIUC as defined in the UCD. See 8.4.5.4.1.

Companded SC
The Companded SC indicates the number of allocated subchannels.

BIN Offset
The offset of the BIN allocated for this UL burst.

6.3.2.3.38.7.4 Compact UL-MAP IE for UIUC subchannel

The format of Compact UL-MAP IE for UIUC subchannel is presented in Table 133.

Table 133—HARQ Compact UL-MAP IE format for UIUC subchannel

Syntax	Size (bit)	Notes
Compact_UL-MAP_IE() {	—	—
UL-MAP Type = 3	3	—
Reserved	1	Shall be set to zero
UIUC	4	—
RCID_IE	*variable*	—
if (UIUC == 12) {	—	—
OFDMA symbol offset	8	—
Subchannel offset	7	—
No. OFDMA symbols	7	—
No. Subchannels	7	—
Ranging method	2	0b00–Initial ranging over two symbols 0b01–Initial ranging over four symbols 0b10–BR/periodic ranging over one symbol 0b11–BR/periodic ranging over three symbols
Reserved	1	Shall be set to zero
} else if (UIUC == 14) {	—	—

Table 133—HARQ Compact UL-MAP IE format for UIUC subchannel *(continued)*

Syntax	Size (bit)	Notes
CDMA_Allocation_IE()	32	—
} else if (UIUC == 15) {	—	—
UL_Extended IE()	*variable*	See 8.4.5.4.4 and 8.4.5.4.4.1
} else {	—	—
No. Subchannels	8	The number of subchannels allocated by the IE
Repetition coding indication	2	0b00–No repetition coding 0b01–Repetition coding of 2 used 0b10–Repetition coding of 4 used 0b11–Repetition coding of 6 used
Reserved	2	Shall be set to zero
}	—	—
HARQ_Control_IE	*variable*	—
}	—	—

UL-MAP Type
This value specifies the type of the Compact UL-MAP IE. A value of 3 indicates the UIUC type.

UIUC
This value indicates the usage of this burst.

RCID_IE
Represents the assignment of the IE.

No. Subchannels
This value indicates the number of subchannels allocated by the IE.

Repetition coding indication
Indicates the repetition code used inside the allocated burst.

6.3.2.3.38.7.5 Compact UL-MAP IE for HARQ region allocation

The HARQ ACK region shall reside in fast-feedback region.

The HARQ ACK region information is delivered through the Compact UL-MAP IE as shown in Table 134. SS sends ACK information for HARQ-enabled DL bursts in the HARQ region specified by the IE.

The subchannels in the HARQ ACK region are divided into two half-subchannels. The first half-subchannel is composed of first, third, and fifth tiles, and the second half-subchannel is composed of second, fourth, and sixth tiles. In the HARQ ACK region, the $2n$-th half-subchannel is the first half-subchannel and the $(2n+1)$-th half-subchannel is the second half-subchannel of the n-th subchannel.

The HARQ-enabled SS that receives HARQ DL burst at i-th frame shall transmit ACK signal through the half-subchannel in the HARQ region at $(i+j)$-th frame. The frame offset "j" is defined by the HARQ ACK

Delay for DL Burst field in the UCD message. The half-subchannel offset in the HARQ Region is determined by the order of HARQ-enabled DL burst in the HARQ MAP. For example, when an SS receives a HARQ-enabled burst at *i*-th frame and the burst is *n*-th HARQ-enabled burst in the HARQ MAP, the SS would transmit HARQ ACK at *n*-th half-subchannel in HARQ region that is allocated by the BS at the (*i*+*j*)-th frame. The Compact MAP IE identifying the HARQ burst should set the RCID field to Basic CID of an SS, and the Prefix field in the HARQ Control IE to 1. Otherwise, the MAP IE shall not be considered as HARQ-enabled burst.

Table 134—HARQ Compact UL-MAP IE format for HARQ region allocation

Syntax	Size (bit)	Notes
Compact_UL-MAP_IE() {	—	—
UL-MAP Type = 4	3	—
HARQ Region Change Indication	1	0: No region change 1: Region changed
if (HARQ Region Change Indication == 1) {	—	—
OFDMA Symbol offset	8	—
Subchannel offset	8	—
No. OFDMA Symbols	8	—
No. Subchannels	8	—
}	—	—
}	—	—

UL-MAP Type
Defines the type of Compact UL-MAP. If the type value is 4, the Compact UL-MAP is for HARQ Region allocation.

HARQ Region Change Indication
Indicates whether the region for HARQ ACK is changed or not.

OFDMA Symbol offset
Subchannel offset
No. OFDMA Symbols
No. Subchannels
Specify the start symbol offset, the start subchannel offset, the number of allocated symbols, and the number of subchannels for the HARQ acknowledgement region respectively.

Whenever HARQ-enabled DL-SDMA allocations are made within a frame, the ACKs for the SDMA users allocated on the second layer shall be appended to the ACKs for the non-SDMA and first-layer SDMA users.

6.3.2.3.38.7.6 Compact UL-MAP IE for CQICH region allocation

The HARQ CQICH region shall reside in fast-feedback region.

When there exists a need to allocate multiple CQICHs to an MS, the number of used subchannels for CQICH region shall be increased by the total number of additional CQICHs for all MSs within the frame, and their positions shall be specified by allocation indices of their respective MIMO Compact DL-MAP IE.

The CQI region information is delivered through the Compact UL-MAP IE as shown in Table 135. The SS sends CQI report in CQI region. The CQICH Control IE allocates a CQI channel in a CQICH region. When no CQICH Region Allocation IE exists in HARQ MAP, then fast-feedback region shall be used instead for CQICH region.

Table 135—HARQ Compact UL-MAP IE format for CQI region allocation

Syntax	Size (bit)	Notes
Compact_UL-MAP_IE() {	—	—
UL-MAP Type = 5	3	—
CQI Region Change Indication	1	0: No region change 1: Region changed
if (CQI Region Change Indication == 1) {	—	—
OFDMA Symbol offset	8	—
Subchannel offset	8	—
No. OFDMA Symbols	8	—
No. Subchannels	8	—
}	—	—
}	—	—

UL-MAP Type
Defines the type of Compact UL-MAP. If the type value is 5, the Compact UL-MAP is for CQI Region allocation.

CQI Region Change Indication
Indicates whether the region for CQI is changed or not.

OFDMA Symbol offset
Subchannel offset
No. OFDMA Symbols
No. Subchannels
Specify the start symbol offset, the start subchannel offset, the number of allocated symbols, and the number of subchannels for the CQI report region respectively.

6.3.2.3.38.7.7 Compact UL-MAP IE for extension

The format of Compact UL-MAP IE for extension is presented in Table 136.

Table 136—HARQ Compact UL-MAP IE format for extension

Syntax	Size (bit)	Notes
Compact_UL-MAP_IE() {	—	—
UL-MAP Type = 7	3	—
UL-MAP subtype	5	Extension subtype
Length	4	Length of the IE in bytes
Payload	*variable*	Subtype dependent payload
}	—	—

UL-MAP Type
Specifies the type of the Compact UL-MAP IE. A value of 7 indicates the extension type.

UL-MAP Subtype
Specifies the subtype of the Compact UL-MAP IE.

Length
Indicates the length of this IE in bytes. If an SS cannot recognize the UL-MAP subtype, it skips the IE.

Payload
The payload depends on the value of UL-MAP subtype. The length of payload is Length – 1 bytes.

Table 137 represents the extended types of compact UL MAP.

Table 137—UL-MAP subtypes

Extended compact UL-MAP Type	Description
0	Switch HARQ Mode
1..31	*Reserved*

6.3.2.3.38.7.8 Compact UL-MAP IE for allocation start offset

The format of Compact UL-MAP IE for allocation start offset is presented in Table 138.

Table 138—HARQ Compact UL-MAP IE format for allocation start offset

Syntax	Size (bit)	Notes
Compact_UL-MAP_IE() {	—	—
UL-MAP Type = 7	3	—
UL-MAP subtype	5	Extension subtype = 0
Length = 2	4	Length of the IE in bytes
Start symbol offset	5	Offset from the start of UL subframe
Start subchannel offset	8	—
}	—	—

UL-MAP Type
Specifies the type of the Compact UL-MAP IE. A value of 7 indicates the extension type.

UL-MAP Subtype
Specifies the subtype of the Compact UL-MAP IE.

Length
Indicates the length of this IE in bytes. If an SS cannot recognize the UL-MAP subtype, it skips the IE.

Start symbol offset
A subsequent HARQ UL data burst allocation shall start from the symbol specified in the value. However, this value does not affect to the ranging region, CQICH region, and HARQ ACK region.

Start subchannel offset
A subsequent HARQ UL data burst allocation shall start from the subchannel specified in the value. However, this value does not affect to the ranging region, CQICH region, and HARQ ACK region.

6.3.2.3.38.7.9 MIMO Compact UL-MAP IE format

When MIMO-enabled UL burst are present within a frame, they shall be allocated before non-MIMO DL burst in both diversity and AMC zones. Figure 38 exemplifies the UL HARQ subframe structure, where the 1-by-6 AMC type is depicted.

Within the MIMO diversity zone, subchannels shall take the form of Mini-subchannel Type 0b01 in Table 389, which spans over six symbols. Within the MIMO AMC zone, subchannels shall take 1-by-6 AMC type. Both MIMO diversity and MIMO AMC zones shall contain multiples of six symbols.

Each MIMO-enabled UL burst shall be first allocated by the regular Compact UL-MAP IE for diversity subchannels (see Table 123) and AMC subchannels (see Table 124), followed by the extended MIMO

Compact UL-MAP IE. The indication of zone boundary shall be made by the presence of UL Zone IE in Table 388.

The format of MIMO Compact UL-MAP IE is presented in Table 139. This extended IE shall follow right after the basic allocation IE for each MIMO-enabled UL burst.

Table 139—MIMO Compact UL-MAP IE format

Syntax	Size (bit)	Notes
MIMO Compact UL-MAP IE()	—	—
Compact UL-MAP Type	3	Type = 7
UL-MAP Subtype	5	MIMO = 0x01
Length	4	Length of the IE in bytes
Matrix indicator	1	UL STC matrices (see 8.4.8.4) For 2-antenna MS, 0 = Matrix A 1 = Matrix B For collaborative SM-capable MS, 0 = Pilot pattern A 1 = Pilot pattern B
Num_layer	1	Number of multiple coding/modulation layers 0 = 1 layer 1 = 2 layers
for (j = 1; j < Number of layers; j++) {	—	This loop specifies the N_{EP} for layers 2 and above when required for STC. The same N_{SCH} and RCID applied for each layer
if (HARQ Mode = CTC Incremental Redundancy) {	—	HARQ mode is specified in the HARQ Compact UL-MAP IE format for switch HARQ mode
N_{EP}	4	—
} elseif (HARQ Mode = Generic Chase) {	—	—
UIUC	4	—
}	—	—
}	—	—
Padding	*variable*	The padding bits are used to ensure the IE size is integer number of bytes
}	—	—

For each layer, a codeword shall be constructed according to 8.4.9.2.3.5 with the N_{EP} and N_{SCH} combination and mapped onto the corresponding layer. Multiple codewords from multiple layers shall be interpreted as one HARQ channel whose parameters are given in the preceding Compact UL-MAP IE.

At the receiver, an ACK shall be transmitted only when there is no CRC error detected on every layer. Otherwise, a NACK shall be transmitted.

6.3.2.3.38.7.10 SDMA Compact UL-MAP IE format

SDMA transmissions may be allocated in the UL with the SDMA Compact UL-MAP IE (Table 140).

Table 140—SDMA Compact UL-MAP IE format

Syntax	Size (bit)	Notes
SDMA_Compact_UL-MAP_IE() {	—	—
Compact UL-MAP Type	3	Type = 7
UL-MAP Subtype	5	SDMA = 0x03
Length	4	Length of the IE in bytes
Matrix indicator	1	UL STC matrices (see 8.4.8.4) For 2-antenna MS, 0 = Matrix A, 1 = Matrix B
Num layer	1	Number of multiple coding/modulation layers: 0–1 layer 1–2 layers
Padding	2	For byte alignment. Shall be set to zero.
For (j = 1; j < Number of layers; j++) {		This loop specifies the N_{EP} for layer 2 when required for STC.
RCID	*variable*	MS identifier for the current layer of the SDMA allocation.
if (HARQ Mode = CTC Incremental Redundancy) {	—	HARQ mode is specified in the HARQ Compact UL-MAP IE format for switch HARQ mode.
N_{EP}	4	—
} elseif (HARQ Mode = Generic Chase) {	—	—
UIUC	4	—
}	—	—
Padding	*variable*	The padding bits are used to ensure the contents within the layer loop are an integer number of bytes. Shall be set to zero.
}	—	—
}	—	—

Num_layer

The Num_layer specifies the number of SDMA layers. It is interpreted as the number of Tx antennas (as defined in 8.4.8). The first layer/user shall use pilot pattern A and the second layer/user shall use pilot pattern B. The third layer/user shall use pilot pattern C and the fourth layer/user shall use pilot pattern D.

6.3.2.3.39 MOB_SLP-REQ (sleep request) message

An MS supporting sleep mode uses the MOB_SLP-REQ message to request definition and/or activation of certain Power Save Classes of types 1, 2, and 3. The MOB_SLP-REQ message is sent from the MS to the BS on the MS's Basic CID. If Definition bit is set, the message contains suggested by the MS definition of new power saving class. See Table 141.

Table 141—MOB_SLP-REQ message format

Syntax	Size (bit)	Notes
MOB_SLP-REQ_Message_format() {	—	—
Management Message Type = 50	8	—
Number of Classes	8	Number of power saving classes
for (*i* = 0; *i* < Number of Classes; *i*++) {	—	—
Definition	1	—
Operation	1	—
Power_Saving_Class_ID	6	—
if (Operation = 1) {	—	—
Start_frame_number	7	—
Reserved	1	—
}	—	—
if (Definition = 1) {	—	—
Power_Saving_Class_Type	2	—
Direction	2	—
TRF-IND_Required	1	—
Traffic_triggered_wakening_flag	1	—
Reserved	2	—
initial-sleep window	8	—
listening-window	8	—
final-sleep window base	10	—
final-sleep window exponent	3	—
Number_of_CIDs	3	—
for (*i* = 0; *i* < Number_of_CIDs; *i*++ {	—	—
CID	16	—
}	—	—
}	—	—

Table 141—MOB_SLP-REQ message format *(continued)*

Syntax	Size (bit)	Notes
}	—	—
TLV encoded information	*variable*	—
}	—	—

Parameters shall be as follows:

Definition

0 = Definition of power saving class absent; in this case the message shall request activation or deactivation of power saving class identified by Power_Saving_Class_ID.

1 = Definition of power saving class present.

Operation

0 = Deactivation of power saving class (for types 1 and 2 only).

1 = Activation of power saving class.

If Definition == 1 and Operation == 0

Then MOB_SLP-RSP contains definition of new Power Saving Class without immediate activation.

If Definition == 1 and Operation == 1

Then MOB_SLP-RSP contains definition of Power Saving Class and activates the Power Saving Class per the parameters in the message

If Definition == 0 and Operation == 0

Then MOB_SLP-RSP deactivates the previously defined active Power Saving Class

If Definition == 0 and Operation == 1

Then MOB_SLP-RSP activates the previously defined Power Saving Class

Power Saving Class Type

0b01 = power saving class type I

0b10 = power saving class type II

0b11 = power saving class type III

Power_Saving_Class_ID

Assigned power saving class identifier. The ID shall be unique within the group of power saving classes associated with the MS. This ID may be used in further MOB_SLP-REQ/RSP messages for activation/deactivation of power saving class.

Start_frame_number

Start frame number for first sleep window.

Direction

Defined the directions of the class's CIDs.

0b00 = Unspecified. Each CID has its own direction assign in its connection creation. Can be DL, UL, or both.
0b01 = DL direction only.
0b10 = UL direction only.
0b11 = *Reserved*.

TRF-IND_Required

For Power Saving Class Type I only.

1 = BS is requested to transmit at least one MOB_TRF-IND message. The BS shall transmit at least one MOB_TRF-IND message in each availability interval which contains at least one listening window for Power Saving Class of type I.

This bit shall be set to 0 for other types.

Traffic_triggered_wakening_flag (for Type I only)

0 = Power saving class shall not be deactivated if traffic appears at the connection as described in 6.3.20.2.
1 = Power saving class shall be deactivated if traffic appears at the connection as described in 6.3.20.2.

Listening window

Assigned Duration of MS listening window (measured in frames). For power saving class type III, it is not relevant and shall be encoded as 0.

Initial-sleep window

Assigned initial duration for the sleep window (measured in frames). For power saving class type III, it is not relevant and shall be encoded as 0.

Final-sleep window base

Assigned final value for the sleep interval (measured in frames). For power saving class type II, it is not relevant and shall be encoded as 0. For power saving class type III, it is the base for duration of single sleep window requested by the message.

Final-sleep window exponent

Assigned factor by which the final-sleep window base is multiplied in order to calculate the

final-sleep window. The following formula is used:

$$\text{final-sleep window} = \text{final-sleep window base} \times 2^{(\text{final-sleep window exponent})}$$

For power saving class type III, it is the exponent for the duration of single sleep window requested by the message.

Number_of_CIDs

Number_of_CIDs = 0 means all CIDs associated with the MS at the time the MOB_SLP-REQ message is transmitted are added to the Power Saving Class.

CID

CIDs of all connections comprising the Power Saving Class. If Basic CID is included, it means that all MS management connections are included in the Power Saving Class. If CID=0 is included, that means all current transport connections at the time the MOB_SLP-REQ message is transmitted are added to the Power Saving Class.

The following TLV parameter may be included in MOB_SLP-REQ message transmitted when requesting an activation of power saving class. This TLV indicates the enabled action that MS performs upon reaching trigger condition in sleep mode.

Enabled-Action-Triggered
Indicates possible action upon reaching trigger condition.

The following TLV parameter may be included in MOB_SLP-REQ message transmitted when requesting an activation of power saving class. This TLV indicates that the unavailability interval of the activated PSC is to be used for coexistence purposes in the MS and the BS is requested to use coexistence behavior for the PSC.

Co-located-Coexistence-Enabled
This TLV indicates the PSC is also to support co-located coexistence.

The following TLV may be included in the MOB_SLP-REQ message:

Sleep mode functions enabled in H-FDD
This TLV indicates features that are to be used to support H-FDD operation.

The MOB_SLP-REQ shall include the following parameters encoded as TLV tuples:

HMAC/CMAC Tuple (see 11.1.2)
The HMAC/CMAC Tuple shall be the last attribute in the message.

6.3.2.3.40 MOB_SLP-RSP (sleep response) message

The MOB_SLP-RSP message shall be sent from BS to an MS on Broadcast CID (PSC type III only) or on the MSs basic CID in response to a MOB_SLP-REQ message. The BS may end the unsolicited MOB_SLP-RSP message for the purpose of activation or deactivation only. The BS may either reconfigure sleep mode parameters in MOB_SLP-RSP by using the same Power Saving Class ID, or may define a new sleep class by using a new Power Saving Class ID. When defining a new sleep class: the Definition bit shall be set, and the message shall contain the definition of a new Power Saving Class together with an assigned Power_Saving_Class_ID that shall be unique per MS if unicast traffic connections are included and unique per cell if only multicast connections are included.

In case the MS receives a MOB_SLP-RSP message with Definition=1 and Operation=1 regarding a Power Saving Class that is currently activated, then the MS shall deactivate the Power Saving Class and re-activate it according to the new definition.

After reception of the message, the MS shall assemble connections in power saving classes and optionally activate them as requested in the message. If for certain class activation is deferred (Activation = 0), the BS may signal activation at later time in another unsolicited MOB_SLP-RSP message (Table 142).

Table 142—MOB_SLP-RSP message format

Syntax	Size (bit)	Notes
MOB_SLP-RSP_Message_format() {	—	—
Management Message Type = 51	8	—
Number of Classes	8	Number of power saving classes

Table 142—MOB_SLP-RSP message format *(continued)*

Syntax	Size (bit)	Notes
for (*i* = 0; *i* < Number_of_Classes; *i*++) {	—	—
Length of Data	7	—
Sleep Approved	1	
Definition	1	—
Operation	1	—
Power_Saving_Class_ID	6	—
if (Sleep Approved == 1) {	—	—
if (Operation = 1) {	—	—
Start_frame_number	7	—
Stop_CQI_Allocation_Flag	1	—
}	—	—
if (Definition = 1) {	—	—
initial-sleep window	8	—
listening window	8	—
final-sleep window base	10	—
final-sleep window exponent	3	—
Traffic_triggered_wakening_flag	1	—
Power_Saving_Class_Type	2	—
Direction	2	—
TRF-IND required	1	—
Reserved	1	—
Number_of_CIDs	4	—
for (*j* = 0; *j* < Number_of_CIDs; *j*++) {	—	—
CID	16	—
}	—	—
if(**TRF-IND required**){	—	—
SLPID	10	—
Reserved	2	—
}	—	—
if (MDHO or FBSS capability enabled) {	—	If MDHO or FBSS capability is enabled in the REG-REQ/RSP message exchange.
Maintain Diversity Set and Anchor BS	1	—

Table 142—MOB_SLP-RSP message format *(continued)*

Syntax	Size (bit)	Notes
if (Maintain Diversity Set and Anchor BS) {	—	—
MDHO/FBSS duration (s)	3	—
}	—	—
}	—	—
}	—	—
Padding	*variable*	If needed for alignment to byte boundary.
} else {	—	In case sleep approved == 0
REQ-duration	8	—
}		—
}	—	—
TLV encoded information	*variable*	—
}	—	—

Parameters shall be as follows:

Length_of_Data

Number of bytes in following specification of power saving class, including all fields within the FOR loop.

Sleep_Approved

1 = Indicates that BS approves the MS's Definition/Activation/Deactivation Request of the power saving class.

0 = Indicates that BS disapproves the MS's Definition/Activation/Deactivation Request of the power saving class.

For a MOB_SLP-RSP message transmitted in an unsolicited manner, the BS shall set 'Sleep approved' = 1 and 'Definition' = 0 for each Power Saving Class.

Definition

0 = Definition of Power Saving Class absent

1 = Definition of power saving class present.

Operation

0 = Deactivation of power saving class (for types I and II only).

1 = Activation of power saving class.

If Definition == 1 and Operation == 0

Then MOB_SLP-RSP contains definition of new Power Saving Class without immediate activation.

If Definition == 1 and Operation == 1

Then MOB_SLP-RSP contains definition of Power Saving Class and activates the Power Saving Class per the parameters in the message

If Definition == 0 and Operation == 0

Then MOB_SLP-RSP deactivates the previously defined active Power Saving Class

If Definition == 0 and Operation == 1

Then MOB_SLP-RSP activates the previously defined Power Saving Class

Power_Saving_Class_ID

Assigned power saving class identifier. The ID shall be unique within the group of power saving classes associated with the MS. This ID may be used in further MOB_SLP-REQ/RSP messages for activation/deactivation of power saving class.

Start_frame_number

Start frame number for first sleep window.

REQ-duration

Waiting value for the MOB_SLP-REQ message retransmission (measured in MAC frames): the MS may retransmit the MOB_SLP-REQ message after the time duration (REQ-duration) provided in the message.

Power_Saving_Class_Type

0b01 = power saving class type I
0b10 = power saving class type II
0b11 = power saving class type III

Stop_CQI_Allocation_Flag

1 = Indicates that this MOB_SLP-RSP message deallocates all CQICH allocated to the MS.
0 = Indicates that this MOB_SLP-RSP message does not deallocate any CQICH allocated to the MS, and the MS shall continue to transmit channel quality information on the CQICH during its availability intervals.

Direction

Defined the directions of the class's CID:

0b00 = Unspecified. Each CID has its own direction assigned in its connection creation. Can be DL, UL, or both.
0b01 = DL direction (for management connections only).
0b10 = UL direction only.
0b11 = *Reserved.*

Listening interval

Assigned Duration of MS listening interval (measured in frames). For power saving class type III, it is not relevant and shall be encoded as 0.

Initial-sleep window

Assigned initial duration for the sleep window (measured in frames). For power saving class type III, it is not relevant and shall be encoded as 0.

Final-sleep window base

Assigned final value for the sleep interval (measured in frames). For power saving class type II, it is not relevant and shall be encoded as 0. For power saving class type III, it is the base for duration of single sleep window requested by the message.

Final-sleep window exponent

Assigned factor by which the final-sleep window base is multiplied in order to calculate the final-sleep window. The following formula is used:

$$\text{final-sleep window} = \text{final-sleep window base} \times 2^{(\text{final-sleep window exponent})}$$

For power saving class type III it is the exponent for the duration of single sleep window requested by the message.

TRF-IND_Required

For power saving class type I only.

1 = The BS shall transmit at least one MOB_TRF-IND message in each availability interval which contains at least one listening window of Power Saving Class of type I.

This bit shall be set to 0 for another types.

Traffic_triggered_wakening_flag (for Type I only)

1 = Power saving class shall be deactivated if traffic appears at the connection as described in 6.3.20.2.

0 = Power saving class shall not be deactivated if traffic appears at the connection as described in 6.3.20.2.

SLPID

This is a number assigned by the BS whenever an MS is instructed to enter sleep mode. This number shall be unique in the sense that it is assigned to a single MS that is instructed to enter sleep mode. No other MS shall be assigned the same number while the first MS is still in sleep mode.

Number_of_CIDs

Number_of_CIDs = 0 means all CIDs associated with the MS at the time the MOB_SLP-RSP message is received are added to the Power Saving Class.

CID

CIDs of all connections comprising the Power Saving Class. If Basic CID is included, it means that all MS management connections are included in the Power Saving Class. If CID = 0 is included, that means all current transport connections are added to the Power Saving Class. If Defintion = 1, then the service flow management encoding PSC Assignment shall be set to the value of the Power_Saving_Class_ID in this message corresponding to the transport connection identified in the CID information element.

Maintain Diversity Set and Anchor BS

1:The Diversity set and anchor BS shall be maintained while in sleep mode for MDHO/FBSS duration.

0:The Diversity set and anchor BS shall not be maintained while in sleep mode.

MDHO/FBSS duration(s)

The Diversity set and anchor BS shall be maintained for 10x2exp(s) frames after the power saving class is activated.

The following TLV parameter may be included in the MOB_SLP-RSP message transmitted by the BS.

Enabled-Action-Triggered (11.1.7.1)

This TLV indicates the enabled action that the MS performs upon reaching trigger condition in sleep mode.

Next Periodic Ranging (11.1.7.3)

This value indicates the offset of frame in which MS shall be ready to perform a periodic ranging with respect to the frame where MOB_SLP-RSP is transmitted.

Sleep mode functions enabled in H-FDD

This TLV indicates features that are to be used to support H-FDD operation.

The MOB_SLP-RSP shall include the following parameter encoded as TLV tuples:

HMAC/CMAC Tuple (see 11.1.2)
The HMAC/CMAC Tuple shall be the last attribute in the message.

The BS shall not use Number_of_CIDs=0 or CID=0 during a transaction of DSA or DSD at the BS where the CIDs defined may be different between MS and BS. The start and end of this conditional restriction are respectively defined by the following:

— The sending of the request, and the reception of the response for a BS initiated transaction.
— The reception of the request, and the reception of the acknowledgement for a MS initiated transaction.

When a MS has sent a MOB_SLP-REQ message including a definition, it shall not initiate a DSA or DSD transaction until it has received a MOB_SLP-RSP.

6.3.2.3.41 MOB_TRF-IND (traffic indication) message

This message is sent from the BS to the MS on the Broadcast CID or Sleep Mode Multicast CID. The message is intended for MSs in sleep mode that have one or more power saving class IDs defined with power saving class type I, and is sent during those MS's listening-intervals. All MSs with no power saving class IDs defined of power saving class type I shall ignore this message. The message indicates whether there has been traffic addressed to each MS that is in sleep mode. For an MS that is in sleep mode, during its listening-window the MS shall decode this message to seek an indication addressed to itself.

When an MS awakens, it shall check the frame number to ensure that it did not lose frame synchronization with the BS and read the SLPID-Group Indication bit-map or Traffic Indication bit-map assigned to it. If the MOB_TRF-IND has a positive indication, this message indicates that there is traffic directed to the MS and the MS shall deactivate the power saving class.

If the MOB_TRF-IND has a negative indication, this message indicates that there is no current traffic pending for CIDs belonging to this PSC. The MS continues to receive all DL transmission including subsequent MOB_TRF-IND messages in the availability interval.

There are two formats for the MOB_TRF-IND message, indicated by the FMT field. When FMT = 0, if the MS does not find its own SLPID-Group Indication bit-map or Traffic Indication bit-map to its SLPID in the MOB_TRF-IND message, it shall consider this as a negative indication and may continue its sleep mode. The MS shall update its SLPID if it finds its own Old_New_SLPID in SLPID_Update TLV (11.1.7.2). When FMT = 1, if the MS does not find its own SLPID in the MOB_TRF-IND message, it will consider this as a negative indication and may continue its sleep mode.

BS may arbitrarily include a positive indication for an MS in MOB_TRF-IND message during listening-window if the MS's periodic ranging operation is scheduled to start sooner or later within next sleep-window, even if there is no DL Traffic to be sent to the MS. See Table 143.

Table 143—MOB_TRF-IND message format

Syntax	Size (bit)	Notes
MOB_TRF-IND_Message_format() {	—	—
Management Message Type = 52	8	—
FMT	1	—
if (FMT == 0) {	—	—
SLPID Group Indication Bitmap	32	*N*-th bit of SLPID-Group Indication Bitmap [MSB corresponds to N = 0] is allocated to SLPID Group that includes MS with SLPID values from N × 32 to N × 32+31 Meaning of this bit 0: There is no traffic for all the 32 MS that belong to the SLPID-Group 1: There is traffic for at least one MS in SLPID-Group.
Traffic Indication Bitmap	*variable*	The Traffic Indication bitmap comprises the multiples of 32-bit long Traffic Indication unit. A Traffic Indication unit for 32 SLPIDs is added to MOB_TRF-IND message whenever its SLPID Group is set to 1 32 bits of Traffic Indication Unit (starting from MSB) are allocated to MS in the ascending order of their SLPID values: 0: Negative indication 1: Positive indication
} else {	—	—
Num_Pos	8	Number of SLPIDs following
for (*i* = 0; *i* < Num_Pos; *i*++) {	—	—
SLPIDs	10	—
}	—	—
}	—	—
Padding	*variable*	If needed, for alignment to byte boundary.
TLV encoded items	*variable*	—
}	—	—

Parameters shall be as follows:

FMT

The FMT field indicates one of the SLPID bit-map based format and the SLPID based format.

SLPID-Group Indication Bitmap

SLPIDs from 0 to 1023 are divided into 32 SLPID-Groups. Therefore, the respective SLPID-Group has the range as follows:

SLPID-Group #0 (MSB) corresponds to SLPID = 0…31.
SLPID-Group #1 corresponds to SLPID = 32…63.
…
SLPID-Group #31 corresponds to SLPID = 992…1023.

SLPID-Group Indication Bitmap is a 32-bit field where each bit is assigned to the respective SLPID-Group. In other words, the MSB in the field is assigned to SLPID-Group #0, and subsequent bit relates to SLPID-Group #1, etc.

The n-th bit (b_n), n = 0~31, of SLPID-Group Indication Bitmap shall be interpreted in the following manner:

b_n = 0 means that there is no traffic for all the 32 MS belonging to SLPID-Group #n. In this case, the MS in sleep mode belonging to SLPID-Group #n may return to sleep mode.
b_n = 1 means that there exists traffic for one or more MS belonging to SLPID-Group #n. In this case, the MS in sleep mode belonging to SLPID-Group #n shall read its own Traffic Indication bit-map in MOB_TRF-IND message.

Traffic Indication bit-map

The Traffic Indication bit map comprises the multiples of 32-bit long Traffic Indication Unit for every SLPID-Group with SLPID-Group indication bit = 1. Bits in a 32-bit Traffic Indication unit (starting from MSB) are allocated to MS to in ascending order of SLPIDs. Each bit signals traffic information for the corresponding MS as follows:

0: Negative indication
1: Positive indication

Num-pos

The number of positive indication.

SLPID

The SLPID for the Power_Saving_Class_ID deactivated by this message and for MS to be transited into an awake mode.

When MOB_TRF-IND message has FMT = 0, it may include the following TLV:

SLPID_Update (11.1.7.2)

The SLPID_Update is a compound TLV value that provides a shorthand method for changing the SLPID used by the MS in sleep mode operation. The SLPID_Update TLV specifies a new SLPID that replaces an old SLPID. The SLPID_Update TLV may contain multiple Old_New_SLPID values for the MS negatively indicated in MOB_TRF-IND message.

6.3.2.3.42 MOB_NBR-ADV (neighbor advertisement) message

BSs supporting mobile functionality shall be capable of transmitting a MOB_NBR-ADV management message at a periodic interval (MOB_NBR-ADV interval; see Table 554) to identify the network and define the characteristics of neighbor BS to potential MS seeking initial network entry or HO. For the compression of neighbor BSIDs using this message in MOB_SCN-REQ, MOB_SCN-RSP, MOB_SCN-REP, and MOB_MSHO-REQ messages, the BS shall keep a mapping-table of neighbor BS MAC addresses and neighbor BS indexes transmitted through MOB_NBR-ADV message, for each Configuration Change Count. Using these mapping-tables, BSs can derive 48-bit neighbor BSID from neighbor BS index included

in MOB_SCN-REQ, MOB_SCNRSP, MOB_SCN-REP or MOB_MSHO-REQ messages. MOB_SCN-REQ, MOB_SCN-RSP, and MOB_SCN-REP messages may identify the MOB_NBR-ADV BS indexes using a BS index bitmap (Nbr_Index_Bitmap), where a BS index corresponds to the position of a BS in the MOB_NBR-ADV message and a bit position in the bitmap corresponds to a BS index of the MOB_NBR-ADV.

If neighbor information is not available, this message need not be transmitted. See Table 144.

Table 144—MOB_NBR-ADV message format

Syntax	Size (bit)	Notes
MOB_NBR-ADV_Message_format() {	—	—
Management Message Type = 53	8	—
Skip-optional-fields bitmap	6	Bit [0]: if set to 1, omit Operator ID field. Bit [1]: if set to 1, omit NBR BSID field. Bit [2]: if set to 1, omit HO process optimization field. Bit [3]: if set to 1, omit QoS related fields. Bit [4]–[5]: *Reserved.*
Reuse factor for SBS CINR calculation for scan and handover	2	—
If (Skip-optional-fields-[0] = 0) {	—	—
Operator ID	24	Identifier of the network provider
}	—	—
Configuration Change Count	8	Incremented each time the information for the associated neighbor BS has changed.
Fragmentation Index	4	Indicates the current fragmentation index.
Total Fragmentation	4	Indicates the total number of fragmentations.
N_NEIGHBORS	8	—
For (j = 0 ; j < N_NEIGHBORS; j++) {	—	—
Length	8	Length of message information including all fields within the FOR loop.
PHY Profile ID	8	—
if (FA Index Indicator == 1) {	—	—
FA Index	8	Frequency assignment index. This field is present only if the FA index indicator in PHY profile ID is set. Otherwise, the neighbor BS has the same FA Index or the center frequency is indicated using the TLV-encoded information.
}	—	—
if (BS EIRP Indicator == 1) {	—	—

Table 144—MOB_NBR-ADV message format *(continued)*

Syntax	Size (bit)	Notes
BS EIRP	8	Signed Integer from –128 to 127 in unit of dBm This field is present only if the BS EIRP indicator is set in PHY Profile ID. Otherwise, the BS has the same EIRP as the serving BS.
}	—	—
if (Skip-optional-fields[1] = 0) {	—	—
Neighbor BSID	24	This is an optional field for OFDMA PHY, and it is omitted or skipped if Skip Optional Fields flag = 1.
}	—	—
Preamble Index/Subchannel Index	8	For the OFDMA PHY this parameter defines the PHY specific preamble. For the OFDM PHY, the 5 LSB contain the active DL subchannel index and the 3 MSB shall be *Reserved* and set to ‘0b000’. For OFDMA PHY, bit 7 is used to indicate the reuse factor of the neighbor for purpose of CINR measurement for handoff. A value of '0' indicates a reuse factor of 1 and a value of '1' indicates reuse factor of 3. For OFDMA PHY, bit 6 to bit 0 represent the preamble index of the neighbor BS.
if (Skip-optional-fields[2] = 0) {	—	—
HO Process Optimization	8	HO Process Optimization is provided as part of this message is indicative only. HO process requirements may change at time of actual HO. For each Bit location, a value of ‘0’ indicates the associated reentry management messages shall be required, a value of ‘1’ indicates the reentry management message may be omitted. Regardless of the HO Process Optimization TLV settings, the target BS may send unsolicited SBC-RSP and/ or REG-RSP management messages Bit 0: Omit SBC-REQ/RSP management messages during re-entry processing Bit 1: Omit PKM Authentication phase except TEK phase during current re-entry processing Bit 2: Omit PKM TEK creation phase during reentry processing Bit 3: Omit Network Address Acquisition management messages during current reentry processing Bit 4: Omit Time of Day Acquisition management messages during current reentry processing Bit 5: Omit TFTP management messages during current re-entry processing Bit 6: Full service and operational state transfer or sharing between serving BS and target BS (All static and dynamic context, e.g., ARQ window contents, timers, counters, state machines) Bit 7: Omit REG-REQ/RSP management during current re-entry processing.
}	—	—
if (Skip-optional-fields-[3] = 0) {	—	—

Table 144—MOB_NBR-ADV message format *(continued)*

Syntax	Size (bit)	Notes
Scheduling Service Supported	8	Bitmap to indicate if BS supports a particular scheduling service. 1 indicates support, 0 indicates not support: Bit 0: Unsolicited grant service (UGS) Bit 1: Real-time polling service (rtPS) Bit 2: Non-real-time polling service (nrtPS) Bit 3: Best effort (BE) service Bit 4: Extended real-time polling service (ertPS) If the value of bit 0 through bit 4 is 0b00000, it indicates no information on service available. Bits 5–7: *Reserved*; shall be set to zero.
}	—	—
DCD Configuration Change Count	4	This represents the 4 LSBs of the neighbor BS current DCD configuration change count.
UCD Configuration Change Count	4	This represents the 4 LSBs of the neighbor BS current UCD configuration change count.
TLV Encoded Neighbor information	*variable*	TLV-specific.
}	—	—
}	—	—

A BS shall generate MOB_NBR-ADV messages in the format shown in Table 144. The following parameters shall be included in the MOB_NBR-ADV message unless otherwise noted as an optional item in which case they may be included:

Reuse factor for SBS CINR calculation for scan and handover

0b00: Physical SBS CINR for scan or handover triggers shall be calculated according to the number of subcarriers indicated in the DL Frame Prefix "Used subchannel bitmap" field. If the number of used subcarriers is lower than or equal to one third of the total number of subcarriers, then CINR shall be computed according to the rule detailed in 8.4.12.3 for frequency reuse configuration = 3. Otherwise the CINR shall be computed according to the rule detailed in 8.4.12.3 for frequency reuse configuration = 1

0b10: Physical SBS CINR for scan or handover triggers shall be calculated according to the rule detailed in 8.4.12.3 for frequency reuse configuration = 1

0b01: Physical SBS CINR for scan or handover triggers shall be calculated according to the rule detailed in 8.4.12.3 for frequency reuse configuration = 3

0b11: *Reserved*

Operator ID

The network ID shared by an association of BS. The Operator ID field is present only if Bit 0 of Skip-optional-fields bitmap is set to 0. The most significant 24 bits of the Base Station ID shall be used as the Operator ID. The 24-bit Operator ID shall be assigned as an IEEE 802.16 Operator ID by the IEEE Registration Authority.[14] The IEEE Registration Authority shall be the sole authorized number space administrator for this function.

[14]The IEEE Registration Authority is a committee of the IEEE Standards Association Board of Governors. General information as well as details on the allocation of IEEE 802.16 Operator ID can be obtained at http://standards.ieee.org/regauth.

Configuration Change Count

Incremented by one (modulo 256) whenever any of the values relating to any included data element changes, including DCD and UCD parameters. If the value of this count in a subsequent MOB_NBR-ADV message remains the same, the MS can quickly disregard the entire message.

Fragmentation Index

The Fragmentation Index field indicates the current fragmentation index. The index for the first fragmentation is 0.

Total Fragmentation

The Total Fragmentation field set to 1 when the neighbor list is not fragmented. Otherwise, this field indicates the total number of fragments. When the neighbor list is fragmented, the N_NEIGHBORS indicates the number of neighbor BSs in the current message.

Skip-optional-fields Flag:

The Skip-optional-fields Flag indicates whether some fields in MOB_NBR-ADV message may be omitted in the MOB_NBR-ADV message. The field is omitted if the bit is set to 1.

Bit 0: Omit Operator ID field
Bit 1: Omit NBR BSID field
Bit 2: Omit HO process optimization field
Bit 3: Omit QoS related fields

N_NEIGHBORS

The count of the unique combination of neighbor BSID, preamble index, and DCD.

For each advertised neighbor, the following parameters shall be included:

Length

Length of message information within the iteration of N_NEIGHBOR in bytes.

Neighbor BSID

The 24 LSBs of the Base Station ID parameter in the DL-MAP message of the neighbor BS. The Neighbor BSID field is present only if Bit 1 of Skip-optional-fields bitmap is 0.

Preamble Index/Subchannel Index

For the OFDMA PHY this parameter defines the PHY-specific preamble. For the OFDM PHY the 5 LSB contain the DL subchannel index (as defined in Table 248) used in the advertised BS sector. The 3 MSB shall be reserved and set to 0b000.

PHY Profile ID

The PHY Profile ID contains a subset of the MOB_NBR-ADV message fields. For systems using OFDM or OFDMA, the bit-by-bit definition of the PHY Profile ID is shown in Table 145.

Table 145—Bit-by-bit definition of PHY Profile ID of the BS

Item	Size (bit)	Notes
Co-located FA Indicator	1	If the BS (or FA) is co-located with the serving BS, this bit is set to 1. If this bit is set to 1, the following fields of the MOB_NBR-ADV TLV may be omitted: Preamble Index, HO Process Optimization, DCD/UCD Configuration Change Count, and TLV Encoded Neighbor Information
FA Configuration Indicator	1	If this bit is set 1, the BS has the same FA configuration (the same number of FAs as well as their frequencies) as the BS broadcasting the NBR-ADV.
Time/Frequency Synchronization Indicator	2	0b00 = Unsynchronized 0b01 = Time synchronization 0b10 = Time and Frequency synchronization If time synchronization is indicated for the OFDMA PHY, then the DL frames transmitted by the serving BS and the neighbor BS shall be synchronized to a level of at least 1/8 cyclic prefix length. If frequency synchronization is indicated for the OFDMA PHY, then the BS reference clocks shall be synchronized to a level that yields RF center frequency offset of no more than 1% of the OFDMA carrier spacing of the neighbor BS.
BS EIRP Indicator	1	If this bit is set, the BS EIRP follows the PHY Profile ID.
DCD/UCD Reference Indicator	1	1: The DCD/UCD settings of this neighbor BS are the same as those of the preceding neighbor BS unless the TLV information specifies. 0: The DCD/UCD settings of this neighbor BS are the same as those of the serving BS unless the TLV information specifies.
FA Index Indicator	1	Only if this bit is set to 1, the FA Index follows the PHY Profile ID. In addition, if the FA Indicator is followed, the DL center frequency shall be omitted in the DCD/UCD difference TLV information.
Trigger Reference Indicator	1	The Trigger Reference Indicator is related to the neighbor BS trigger metric TLV information of this neighbor BS. 0: In addition to triggers defined by Neighbor BS Trigger TLVs, the MS shall apply the triggers for actions 0x1 and 0x2 defined the DCD message that do not have the same type, function and action as a trigger defined in a Neighbor BS Trigger TLV. 1: In addition to triggers defined by Neighbor BS Trigger TLVs, the MS shall apply the triggers for action of the preceding neighbor BS that do not have the same type, function and action as a trigger defined in a Neighbor BS Trigger TLV.

FA Index

Only if the FA Index Indicator bit in the PHY Profile ID is set to 1, the FA Index follows the PHY Profile ID. In addition, if the FA Indicator is followed, the DL center frequency shall be omitted in the DCD/UCD difference TLV information. The bit-by-bit definition shall be determined by a service provider or a governmental body like FCC.

BS EIRP

The neighbor BS EIRP is listed in a signed integer form from –128 to 127 in units of dBm. The BS EIRP field shall be omitted if the BS EIRP Indicator bit in PHY Profile ID is set zero.

HO Process Optimization

HO Process Optimization is provided as part of this message is indicative only. HO process requirements may change at time of actual HO. For each Bit location, a value of 0 indicates the associated reentry management messages shall be required, a value of 1 indicates the reentry management message may be omitted. Regardless of the HO Process Optimization TLV settings, the target BS may send unsolicited SBC-RSP and/ or REG-RSP management messages:

Bit 0: Omit SBC-REQ/RSP management messages during reentry processing
Bit 1: Omit PKM Authentication phase except TEK phase during current reentry processing
Bit 2: Omit PKM TEK creation phase during reentry processing
Bit 3: Omit Network Address Acquisition management messages during current reentry processing
Bit 4: Omit Time of Day Acquisition management messages during current reentry processing
Bit 5: Omit TFTP management messages during current re-entry processing
Bit 6: Full service and operational state transfer or sharing between serving BS and target BS (All static and dynamic context, e.g., ARQ window contents, timers, counters, state machines)
Bit 7: Omit REG-REQ/RSP management during current re-entry processing

Scheduling Service Supported

The Scheduling Service Supported field is present only if Bit 3 of Skip-optional-fields is 0. Bitmap to indicate if BS supports a particular scheduling service. 1 indicates support, 0 indicates not support:

Bit 0:UGS
Bit 1:rtPS
Bit 2:nrtPS
Bit 3:BE
Bit 4:ertPS
If the value of Bit 0 through Bit 4 is 0b00000, it indicates no information on service available.

DCD Configuration Change Count

Represents the 4 LSBs of the neighbor BS current DCD configuration change count.

UCD Configuration Change Count

Represents the 4 LSBs of the neighbor BS current UCD configuration change count.

For each advertised neighbor BS, the following TLV parameters may be included:

Mobility Feature Supported

Same as in 11.7.13.1.

The following TLV parameters may be included:

DCD_settings

The DCD_settings is a compound TLV that encapsulates TLVs from the neighbor BS's DCD message that may be transmitted in the advertised BS downlink channel. This information is intended to enable fast synchronization of the MS with the advertised BS downlink. The DCD settings fields shall contain only neighbor's DCD TLV values that are different from the serving BS corresponding values or from the DCD_settings of the previous neighbor BS,

whichever is referenced by the DCD/UCD Reference Indicator in the PHY Profile ID. Neighbor BS TLVs that are already represented within the fixed fields of the MOB_NBR-ADV message (e.g., BS_EIRP, DCD configuration change count, neighbor BSID) shall be excluded. For values that are not included, the MS shall assume they are identical to the corresponding values of the serving BS. The duplicate TLV encoding parameters within a Neighbor BS shall not be included in DCD setting.

If the set of paging groups with which the neighbor BS is affiliated is different from the set of paging groups with which the Serving BS is affiliated, the Paging Group ID TLV, containing all the paging groups with which the neighbor BS is affiliated, shall be included.

UCD_settings

The UCD_settings is a compound TLV that encapsulates TLVs from the neighbor BS's UCD message that may be transmitted in the advertised BS downlink channel. This information is intended to enable fast synchronization of the MS with the advertised BS uplink. The UCD settings fields shall contain only neighbor's UCD TLV values that are different from the serving BS's corresponding values or from the UCD_settings of the previous neighbor BS, whichever is referenced by the DCD/UCD Reference Indicator in the PHY Profile ID. Neighbor BS UCD TLVs that are already represented within the fixed fields of the MOB_NBR-ADV message (e.g., UCD configuration change count) shall be excluded. For values that are not included, the MS shall assume they are identical to the serving BS's corresponding values. The duplicate TLV encoding within a Neighbor BS shall not be included in UCD setting.

NOTE—The fixed fields of the neighbor BS's UCD message may be represented by UCD TLVs 198 through 201.

The MOB_NBR-ADV message shall include the BSID of advertised neighbors, either using the Operator ID and the Neighbor BSID fields, or as part of an included DCD_settings TLV.

When the PHY parameters specified by the PHY Mode ID TLV are different than those of the serving BS, the following TLV shall be included:

Neighbor BS Trigger

See 11.18.1.

PHY Mode ID (see 11.18.2)

A 16-bit value that specifies the PHY parameters, including channel bandwidth, FFT size, cyclic prefix, and frame duration.

MCID_Preallocation and Transmission Info (see 11.1.12.1)

MCID_Preallocation and Transmission Info is used by the BS's in one MBS-Zone to provide information about changes in mapping of current MCIDs in the select other MBS Zones as determined by the serving MBS Zone.

MCID-Continuity and Transmission Info (see 11.1.12.2)

MCID-Continuity and Transmission Info is used by the BS's in one MBS-Zone to show consistency of MCID's mapping used in select other MBS Zones as determined by the serving MBS Zone.

6.3.2.3.43 MOB_SCN-REQ (scanning interval allocation request) message

A MOB_SCN-REQ message may be transmitted by an MS to request a scanning interval for the purpose of seeking available BSs and determining their suitability as targets for HO. An MS may request the scanning allocation to perform scanning or noncontention association ranging.

For the compression of neighbor BSIDs through a reference to this message in MOB_SCN-RSP, the BS may keep a mapping-table of neighbor BS MAC addresses and neighbor BS indexes transmitted through this message, for each MOB_SCN-REQ sequence number (Req_Seq_Num), where a BS index corresponds to the position of a BS in the MOB_SCN-REQ message, such that a BS Index of 0 identifies the first BS in the MOB_SCN-REQ message and each next BS Index (incremented by 1) identifies the next BS in the message, according to the sequential order that the BSs appear in the message.

A BS index bitmap (Req_Bitmap_Index) in a MOB_SCN-RSP message may be used to identify MOB_SCN-REQ BS indexes such that each bit position corresponds to a BS Index of the corresponding MOB_SCN_REQ message, the least significant bit corresponds to the first BS Index, each next significant bit corresponds to the next BS Index in sequential order, the most significant bit corresponds to the BS Index of the last requested BS, and BSs with BS Index greater than the last requested BS are not requested and do not have a corresponding bit position in the bitmap. Bitmap position bit value of 1 indicates that the BS is requested and a bit value of 0 indicates that the BS is not requested.

An MS shall generate MOB_SCN-REQ messages in the format shown in Table 146.

Table 146—MOB_SCN-REQ message format

Syntax	Size (bit)	Notes
MOB_SCN-REQ_Message_format() {	—	—
Management Message Type = 54	8	—
Scan duration	8	Units are in frames.
Interleaving interval	8	Units are frames.
Scan Iteration	8	—
N_Recommended_BS_Index	8	Number of neighboring BS to be scanned or associated, which are using BS index that corresponds to the position of BS in MOB_NBR-ADV message, or, when equal to 0xFF, indicates that the BS index bitmap (Nbr_Bitmap_Index) is used.
If(N_Recommended_BS_Index != 0){		
Configuration change count for MOB_NBR-ADV	8	Configuration Change Count value of referring MOB_NBR-ADV message.
}	—	—
if(N_Recommended_BS_Index == 0xFF){	—	—
Reserved	1	Shall be set to zero.
Req_Seq_Num	1	One-bit sequence number for this message that is toggled for each new message.

Table 146—MOB_SCN-REQ message format *(continued)*

Syntax	Size (bit)	Notes
Nbr_Bitmap_Size	6	Size of Nbr_Bitmap_Index in nibbles ((Nbr_Bitmap_Size + 1) × 4), which may be less than or equal to the number of BSs in MOB_ NBR ADV.
Nbr_Bitmap_Index	(Nbr_Bitmap_Size + 1) × 4	Each bit position corresponds to a BS Index of the corresponding MOB_NBR-ADV message, where the least significant bit corresponds to the first BS Index, each next significant bit corresponds to the next BS Index in sequential order, the most significant bit corresponds to the BS Index of the last requested BS, and BSs with BS Index greater than the last requested BS are not requested and do not have a corresponding bit position in the bitmap. Bitmap position bit value: 0: the corresponding BS is not requested. 1: the corresponding BS is requested.
for(each ‘1’ in Nbr_Bitmap_Index){	—	—
Reserved	1	Shall be set to zero.
Scanning_type	3	0b000: Scanning without association. 0b00l: Scanning with association level 0: association without coordination 0b010: Scanning with association level 1: association with coordination. 0b011: Scanning with association level 2: network assisted association. 0bl00–0b111: *Reserved*
}	—	—
} else {	—	—
for(j = 0; j < N_Recommended_BS_Index; j++){	—	—
Neighbor_BS_Index	8	BS index corresponds to position of BS in MOB_NBR-ADV message.
Req_Seq_Num	1	One-bit sequence number for this message that is toggled incremented for each new message.
Scanning type	3	0b000: Scanning without association. 0b001: Scanning with association level 0: association without coordination 0b010: Scanning with association level 1: association with coordination. 0b011: Scanning with association level 2: network assisted association 0b100–0b111: *Reserved*
}		
}	—	—

Table 146—MOB_SCN-REQ message format *(continued)*

Syntax	Size (bit)	Notes
N_Recommended_BS_Full	8	Number of neighboring BS to be scanned or associated, which are using full 48 bits BSID.
For(j = 0; j < N_Recommended_BS_Full; j++){	—	—
Recommended BSID	48	—
Req_Seq_Num	1	One-bit sequence number for this message that is toggled incremented for each new message.
Scanning type	3	0b000: Scanning without association. 0b001: Scanning with association level 0: association without coordination 0b010: Scanning with association level 1: association with coordination. 0b011: Scanning with association level 2: network assisted association 0b100–0b111: *Reserved*
}	—	—
Padding	*variable*	If needed for alignment to byte boundary.
TLV encoded information	*variable*	—
}	—	—

The following parameters shall be included in the MOB_SCN-REQ message:

Scan duration
Duration (in units of frames) of the requested scanning period.

Interleaving Interval
The period of MS's normal operation that is interleaved between Scanning Durations.

Scan Iteration
The requested number of iterating scanning interval by an MS.

N_Recommended_BS_Index
If not equal to 0xFF, this is the number of neighboring BS to be scanned or associated, which are included in MOB_NBR-ADV message. If equal to 0xFF, this indicates that the BS index bitmap (Nbr_Bitmap_Index) is used to identify the BS index that corresponds to the position of BS in MOB_NBR-ADV message. When MS receives MOB_SCN-RSP message from BS in response to MOB_SCN-REQ message, MS shall check whether Configuration Change Count stored by MS is the same as one included in MOB_SCN-RSP message sent by BS. If MS detects mismatch of Configuration Change Counts, it may retransmit MOB_SCN-REQ message to BS. In this case, MS shall set this value to zero.

Configuration Change Count for MOB_NBR-ADV
The value of Configuration Change Count in MOB_NBR-ADV message referred in order to compress neighbor BSID.

Req_Seq_Num

One-bit sequence number for the MOB_SCN-REQ message that is toggled for each new message and may be included in a MOB_SCN-RSP message to identify the MOB_SCNREQ message associated with a MOB_SCN-REQ BS Index bitmap (Req_Bitmap_Index), where a bit position in this bitmap corresponds to a BS index of the MOB_SCN-REQ message and where a BS index corresponds to the position of a BS in the MOB_SCN-REQ message. When an MS receives a MOB_SCN-RSP message from the BS that includes Req_Seq_Num, the MS shall compare its stored value of Req_Seq_Num with the one included in the MOB_SCN-RSP message and discard the MOB_SCN-RSP message if there is a mismatch.

Nbr_Bitmap_Index

Bitmap of BS indexes for a MOB_NBR-ADV message, where each bit position corresponds to a BS Index of the corresponding MOB_NBR-ADV message, the least significant bit corresponds to the first BS Index, each next significant bit corresponds to the next BS Index in sequential order, the most significant bit corresponds to the BS Index of the last requested BS, and BSs with BS Index greater than the last requested BS are not requested and do not have a corresponding bit position in the bitmap. Bitmap position bit value of 1 indicates that the BS is requested and a bit value of 0 indicates that the BS is not requested.

Neighbor_BS_Index

BS index corresponds to position of BS in MOB_NBR-ADV message.

Scanning type

Type of scanning or association to be used by the MS and coordinated by the serving BS (if Association type ≥ 0b011).

N_Recommended_BS_Full

Number of neighboring BS to be scanned or associated, which are using full 48-bit BSID.

Recommended BSID

Identifiers of the BSs the MS plans to scan with or without association.

The MOB_SCN-REQ message may include the following parameters encoded as TLVs:

Sleep Mode Reactivation Information (see 11.20.2)
Recommended start frame (see 11.20)

The MOB_SCN-REQ message shall include the following parameters encoded as TLV tuples:

HMAC/CMAC Tuple (see 11.1.2)

The HMAC/CMAC Tuple shall be the last attribute in the message.

6.3.2.3.44 MOB_SCN-RSP (scanning interval allocation response) message

A MOB_SCN-RSP message shall be transmitted by the BS either unsolicited or in response to a MOB_SCN-REQ message sent by an MS. A BS may transmit MOB_SCN-RSP to start MS scan reporting with or without scanning allocation. A BS may allocate the scanning allocation for MS scanning with Scanning type = 0b000, or MS noncontention association ranging with Scanning type = 0b010 or 0b011. The message shall be transmitted on the Basic CID.

For the compression of neighbor BSIDs through a reference to this message in MOB_SCN-REP, the BS may keep a mapping-table of neighbor BS MAC addresses and neighbor BS indexes transmitted through this message, for each MOB_SCN-RSP sequence number (Rsp_Seq_Num), where a BS index corresponds to the position of a BS in the MOB_SCN-RSP message, such that a BS Index of 0 identifies the first BS in the

MOB_SCN-RSP message and each next BS Index (incremented by 1) identifies the next BS in the message, according to the sequential order that the BSs appear in the message.

A BS index bitmap (Rsp_Bitmap_Index) in a MOB_SCN-REP message may be used to identify MOB_SCN-RSP BS indexes such that each bit position corresponds to a BS Index of the corresponding MOB_SCN_RSP message, the least significant bit corresponds to the first BS Index, each next significant bit corresponds to the next BS Index in sequential order, the most significant bit corresponds to the BS Index of the last recommended BS, and BSs with BS Index greater than the last recommended BS are not recommended and do not have a corresponding bit position in the bitmap. Bitmap position bit value of 1 indicates that the BS is recommended and a bit value of 0 indicates that the BS is not recommended.

The format of the MOB_SCN-RSP message is depicted in Table 147.

Table 147—MOB_SCN-RSP message format

Syntax	Size (bit)	Notes
MOB_SCN-RSP_Message_format() {	—	—
Management Message Type = 55	8	—
Scan duration	8	In units of frames. When Scan Duration is set to zero, no scanning parameters are specified in the message. When MOB_SCN-RSP is sent in response to MOB_SCN-REQ, setting Scan Duration to zero denies MOB_SCN-REQ.
Report mode	2	0b00: No report 0b01: Periodic report 0b10: Event-triggered report 0b11: One-time scan report
Reserved	3	Shall be set to zero.
Rsp_Seq_Num	1	One-bit sequence number for this message that is toggled for each new message.
Use_Nbr_Bitmap_Index	1	Indicates if the bitmap of BS indexes for MOB_NBR-ADV is used. 0: Bitmap of BS indexes for MOB_NBR-ADV is not used. 1: Bitmap of BS indexes for MOB_NBR-ADV is not used.
Use_Req_Bitmap_Index	1	Indicates if the bitmap of BS indexes for MOB_SCN-REQ is used. 0: Bitmap of BS indexes for MOB_SCN-REQ is not used. 1: Bitmap of BS indexes for MOB_SCN-REQ is not used.
Report period	8	If Report mode is set to 0b01 or 0b11, this is the Report Period, in frames; otherwise this field is set to 0. For MS request denied (Scan Duration == 0), Report period is the number of frames that BS suggests to MS before transmitting next MOB_SCN-REQ.

Table 147—MOB_SCN-RSP message format *(continued)*

Syntax	Size (bit)	Notes
Report metric	8	Bitmap indicating metrics on which the corresponding triggers are based: Bit 0: BS CINR mean Bit 1: BS RSSI mean Bit 2: Relative delay Bit 3: BS RTD; this metric shall be only measured on serving BS/anchor BS. Bits 4–7: *Reserved*; shall be set to zero.
if (Scan Duration != 0) {	—	—
Start frame	8	—
Interleaving interval	8	Duration in frames.
Scan iteration	8	—
If(Use_Nbr_Bitmap_Index == 1){		—
Configuration change count for MOB_NBR-ADV	8	—
Reserved	2	Shall be set to zero.
Nbr_Bitmap_Size	6	Size of Nbr_Bitmap_Index in nibbles ((Nbr_Bitmap_Size + 1) × 4), which may be less than or equal to the number of BSs in MOB_NBR-ADV.
Nbr_Bitmap_Index	(Nbr_Bitmap_Size +1) × 4	Each bit position in this bitmap corresponds to a BS Index of the corresponding MOB_NBRADV message, where the least significant bit corresponds to the first BS Index, each next significant bit corresponds to the next BS Index, the most significant bit corresponds to the BS Index of the last recommended BS, and BSs with BS Index greater than the last recommended BS are not recommended and do not have a corresponding bit position in the bitmap. Bitmap position bit value: 0: The corresponding BS is not recommended. 1: The corresponding BS is recommended. When Use_Req_Bitmap_Index equals 1, Nbr_Bitmap_Index only includes BSs that were included in the MOB_NBR-ADV message but that were not included in the corresponding MOB_SCN-REQ message.
for(each ‘1’ in Nbr_Bitmap_Index){		—
Reserved	1	Shall be set to zero.

Table 147—MOB_SCN-RSP message format *(continued)*

Syntax	Size (bit)	Notes
Scanning_type	3	0b000: Scanning without association 0b001: Scanning with association level 0: association without coordination 0b010: Scanning with association level 1: association with coordination 0b011: Scanning with association level 2: network assisted association 0b100–0b111: Reserved
if((Scanning_type == 0b010) OR (Scanning_type == 0b011){		—
Rendezvous_time	8	—
CDMA_code	8	—
Transmission_opportunity_offset	8	—
}		—
}		—
} else {		—
N_Recommended_BS_Index	8	Number of neighboring BS to be scanned or associated, which are using BS index that corresponds to the position of BS in MOB_NBR-ADV message. If N_Recommended_BS_Index, N_Recommended_BS_Full, Use_Nbr_Bitmap_Index, and Use_Req_Bitmap_Index are set to 0, the BS recommends the MS scan all neighbors listed in the MOB_NBR-ADV message. MS may scan a sub-set of the list.
If(N_Recommended_BS_Index != 0){		—
Configuration change count for MOB_NBR-ADV	8	Configuration Change Count value of referring MOB_NBR-ADV message.
}		—
for(j = 0; j < N_Recommended_BS_Index; j++){		—
Neighbor_BS_Index	8	BS index corresponds to position of BS in MOB_NBR-ADV message.
Reserved	1	Shall be set to zero.
Scanning type	3	0b000: Scanning without association 0b001: Scanning with association level 0: association without coordination. 0b010: Scanning with association level 1: association with coordination. 0b011: Scanning with association level 2: network assisted association b100–0b111: *Reserved*

Table 147—MOB_SCN-RSP message format *(continued)*

Syntax	Size (bit)	Notes
If (Scanning type == 0b010 OR Scanning_type == 0b011){	—	—
Rendezvous time	8	Units are frames.
CDMA code	8	From initial ranging codeset.
Transmission_opportunity offset	8	Units are transmission opportunity.
}		
}	—	—
}	—	—
If(Use_Req_Bitmap_Index == 1)	—	—
Req_Seq_Num	1	One-bit sequence number for the corresponding MOB_SCN-REQ message.
Reserved	1	Shall be set to zero.
Req_Bitmap_Size	6	Size of Req_Bitmap_Index in nibbles ((Req_Bitmap_Size + 1) × 4), which may be less than or equal to the number of BSs in MOB_SCN-REQ.
Req_Bitmap_Index	(Req_Bitmap_Size +1) × 4	Each bit position in this bitmap corresponds to a BS Index of the corresponding MOB_SCNREQ message, where the least significant bit corresponds to the first BS Index, each next significant bit corresponds to the next BS Index, the most significant bit corresponds to the BS Index of the last recommended BS, and BSs with BS Index greater than the last recommended BS are not recommended and do not have a corresponding bit position in the bitmap. Bitmap position bit value: 0: The corresponding BS is not recommended. 1: The corresponding BS is recommended.
for(each ‘1’ in Req_Bitmap_Index)	—	—
Reserved	1	Shall be set to zero
Scanning_type	3	0b000: Scanning without association 0b001: Scanning with association level 0: association without coordination 0b010: Scanning with association level 1: association with coordination 0b011: Scanning with association level 2: network assisted association 0b100–0b111: *Reserved*
if(Scanning_type == 0b010 OR Scanning_type == 0b011){	—	—
Rendezvous_time	8	—

Table 147—MOB_SCN-RSP message format *(continued)*

Syntax	Size (bit)	Notes
CDMA_code	8	—
Transmission_opportunity_offset	8	—
}	—	—
}	—	—
}	—	—
N_Recommended_BS_Full	8	Number of neighboring BS to be scanned or associated, which are using full 48 bits BSID.
For(*j* = 0; *j* < N_Recommended_BS_Full; *j*++){	—	—
Recommended BSID	48	BSIDs of BSs that MS shall scan.
Reserved	1	Shall be set to 0
Scanning type	3	0b000: Scanning without association 0b001: Scanning with association level 0: association without coordination 0b010: Scanning with association level 1: association with coordination 0b011: Scanning with association level 2: network assisted association 0b100–0b111: *Reserved*
If (Scanning type == 0b010) OR (Scanning type == 0b011) {	—	—
Rendezvous time	8	Units are frames.
CDMA_code	8	From initial ranging codeset.
Transmission_opportunity offset	8	Units are transmission opportunity.
}	—	—
}	—	—
Padding	*variable*	—
}	—	—
TLV encoded information	*variable*	—
}	—	—

The following parameters shall be included in the MOB_SCN-RSP message:

Scan duration

Duration (in units of frames) where the MS may perform scanning or association for available BSs. When MOB_SCN-RSP is sent in response to MOB_SCN-REQ, setting Scan duration to zero indicates the request for an allocation of scanning interval is denied.

Report mode

0b00:No report
0b01:Periodic report

0b10:Event-triggered report
0b11:One-time scan report

Report period

The period of MS's report of scanning result when the MS is required to report the value periodically or one-time. The period is calculated from the start of the first scan duration. If the BS sends an unsolicited MOB_SCN-RSP message without assignment of a scanning interval and the scan duration is set to zero, the period is calculated from the frame the MS receives the MOB_SCN-RSP message. For MS scanning request denied by MOB_SCN-RSP with Scan Duration set to zero, Report period is the number of frames that BS suggests to MS before transmitting next MOB_SCN-REQ.

Req_Seq_Num

One-bit sequence number for the MOB_SCN-REQ message associated with a MOB_SCN-REQ BS Index bitmap (Req_Bitmap_Index), where a bit position in this bitmap corresponds to a BS index of the MOB_SCN-REQ message and where a BS index corresponds to the position of a BS in the MOB_SCN-REQ message.

Rsp_Seq_Num

One-bit sequence number for the MOB_SCN-RSP message that is toggled for each new message and may be included in a MOB_SCN-REP message to identify the MOB_SCN-RSP message associated with a MOB_SCN-RSP BS Index bitmap (Rsp_Bitmap_Index), where a bit position in this bitmap corresponds to a BS index of the MOB_SCN-RSP message and where a BS index corresponds to the position of a BS in the MOB_SCN-RSP message. When an BS receives a MOB_SCN-REP message from an MS that includes Rsp_Seq_Num, the BS shall compare its stored value of Rsp_Seq_Num with the one included in the MOB_SCN-REP message and discard the MOB_SCN-REP message if there is a mismatch.

Use_Nbr_Bitmap_Index

Indicates if the bitmap of BS indexes for MOB_NBR-ADV is used.

Use_Req_Bitmap_Index

Indicates if the bitmap of BS indexes for MOB_SCN-REQ is used.

Nbr_Bitmap_Index

Bitmap of BS indexes for the corresponding MOB_NBR-ADV message where each bit position corresponds to a BS Index of the corresponding MOB_NBR-ADV message, the least significant bit corresponds to the first BS Index, each next significant bit corresponds to the next BS Index in sequential order, the most significant bit corresponds to the BS Index of the last recommended BS, and BSs with BS Index greater than the last recommended BS are not reported and do not have a corresponding bit position in the bitmap. Bitmap position bit value of 1 indicates that the BS is recommended and a bit value of 0 indicates that the BS is not recommended.

When Use_Req_Bitmap_Index equals 1, Nbr_Bitmap_Index only includes BSs included in the MOB_NBR-ADV message but not included in the corresponding MOB_SCN-REQ message.

Req_Bitmap_Index

Bitmap of BS indexes for the corresponding MOB_SCN_REQ message, where each bit position corresponds to a BS Index of the corresponding MOB_SCN_REQ message, the least significant bit corresponds to the first BS Index, each next significant bit corresponds to the next BS Index in sequential order, the most significant bit corresponds to the BS Index of the last recommended BS, and BSs with BS Index greater than the last recommended BS are not reported and do not have a corresponding bit position in the bitmap.

This bitmap identifies recommended BSs that were included in the corresponding MOB_SCN-REQ message, including BSs that are included in the MOB_NBR-ADV message that were included in the MOB_SCN-REQ message.

Report metric

Bitmap indicator of trigger metrics that the serving BS requests the MS to report. The serving BS shall indicate only the trigger metrics agreed during SBC-REQ/RSP negotiation. Each bit indicates whether reports will be initiated by trigger based on the corresponding metric:

Bit 0: BS CINR mean
Bit 1: BS RSSI mean
Bit 2: Relative delay
Bit 3: BS RTD; this metric shall be only measured on serving BS/anchor BS
Bits 4–7: *Reserved*; shall be set to zero

Start Frame

Represents the 8 least significant bits of the absolute frame number in which the first Scanning interval starts.

Interleaving interval

The period interleaved between Scanning Intervals when MS shall perform normal operation.

Scan iteration

The number of iterating scanning interval.

Configuration Change Count for MOB_NBR-ADV

The value of Configuration Change Count in MOB_NBR-ADV message referred in order to compress neighbor BSID.

N_Recommended_BS_Index

Number of neighboring BS to be scanned or associated, which are included in MOB_NBR-ADV message.

Neighbor_BS_Index

BS index corresponds to position of BS in MOB_NBR-ADV message.

Scanning type

Type of scanning or association used by the MS and coordinated by the serving BS (if scanning type ≥ 0b010).

N_Recommended_BS_Full

Number of neighboring BS to be scanned or associated that are using full 48 bits BSID.

Recommended BSID

Recommended BSID list for scan with or without association.

If Scanning type > 0b001, then the serving BS may request, over the backbone, from Recommended BS allocation of non-contention-based ranging opportunity for MS association activity. When conducting initial ranging to Recommended BS, MS shall use allocated non-contention-based ranging opportunity, if available.

Rendezvous time

This is offset, measured in units of frame duration (of the serving BS), when the corresponding Recommended BS is expected to provide non-contention-based ranging opportunity for the

MS. The offset is calculated from the frame where MOB_SCN-RSP message is transmitted. In case Scanning type = 0b000 or 0b001 the parameter is not applicable and shall be encoded as 0. The Recommended BS is expected to provide non-contention-based ranging opportunity at the frame specified by Rendezvous time parameter.

CDMA code
A unique code assigned to the MS, to be used for association with the neighbor BS. Code is from the initial ranging codeset.

Transmission opportunity offset
A unique transmission opportunity assigned to the MS, to be used for association with the target BS in units of symbol duration.

The MOB_SCN-RSP message may include the following parameters encoded as TLVs:

Sleep Mode Reactivation Information (see 11.20.2)

The MOB_SCN-RSP message shall include the following parameters encoded as TLV tuples:

HMAC/CMAC Tuple (see 11.1.2)
The HMAC/CMAC Tuple shall be the last attribute in the message.

6.3.2.3.45 MOB_SCN-REP (scanning result report) message

When the report mode is 0b10 (i.e., event triggered) in the most recently received MOB_SCN-RSP, the MS shall transmit a MOB_SCN-REP message to report the scanning results to its serving BS after each scanning period if the trigger condition is met. For a periodic report (i.e., Report Mode is 0b01) and for One-time Scan Report (Report Mode is 0b11), the MS reports the scanning results to its serving BS at the time indicated in the MOB_SCN-RSP message except when it is in the scanning interval. The MS shall include all available scanning results for the requested BSs specified in the said MOB_SCN-RSP message. The MS may transmit a MOB_SCN-REP message to report the scanning results to its serving BS at anytime. The message shall be transmitted on the Primary Management CID. (See Table 148.)

Table 148—MOB_SCN-REP message format

Syntax	Size (bit)	Notes
MOB_SCN-REP_Message_format() {	—	—
Management Message Type = 60	8	—
Report Mode	1	0: Event-triggered report 1: Periodic report
N_current_BSs	3	When FBSS/MDHO is supported, N_current_BSs is the number of BSs currently in the diversity set; When FBSS/MDHO is not supported or the MS has an empty diversity set, N_current_BSs is set to 1.
Use_Nbr_Bitmap_Index	1	Indicates if the bitmap of BS indexes for MOB_NBR-ADV is used. 0: Bitmap of BS indexes for MOB_NBR-ADV is not used. 1: Bitmap of BS indexes for MOB_NBR-ADV is not used.

Table 148—MOB_SCN-REP message format *(continued)*

Syntax	Size (bit)	Notes
Use_Rsp_Bitmap_Index	1	Indicates if the bitmap of BS indexes for MOB_SCN-RSP is used. 0: Bitmap of BS indexes for MOB_SCN-RSP is not used. 1: Bitmap of BS indexes for MOB_SCN-RSP is not used.
Reserved	2	—
Report metric	8	Bitmap indicating presence of certain metrics (threshold values) on which the corresponding triggers are based: Bit 0: BS CINR mean Bit 1: BS RSSI mean Bit 2: Relative delay Bit 3: BS RTD; this metric shall be only measured between the serving BS/anchor BS and the reporting MS Bits 4–7: *Reserved*; shall be set to zero
For (j = 0; j < N_current_BSs; j++) {	—	—
Temp BSID	4	Diversity set member ID assigned to this BS. When the MS has an empty diversity set or FBSS/MDHO is not supported, Temp BSID shall be set to 0.
Reserved	4	Shall be set to zero.
If (Report metric[Bit 0] == 1)	—	—
BS CINR mean	8	—
If (Report metric[Bit 1] == 1)	—	—
BS RSSI mean	8	—
If ((Report metric[Bit 2] == 1) and (TempBSID != anchor))	—	—
Relative delay	8	In case FBSS/MDHO is in progress, this field shall include the relative delay of BSs currently in the diversity set, except for that of the anchor BS.
If ((Report metric[Bit 3] == 1) and ((TempBSID == anchor BS) or (TempBSID == serving BS)))	—	—
BS RTD	8	This field shall include the RTD between the serving BS/anchor BS and the reporting MS.
}	—	—
if(Use_Nbr_Bitmap_Index == 1){	—	—
Configuration change count for MOB_NBR-ADV	8	—
Reserved	2	Shall be set to zero.

Table 148—MOB_SCN-REP message format *(continued)*

Syntax	Size (bit)	Notes
Nbr_Bitmap_Size	6	Size of Nbr_Bitmap_Index in nibbles ((Nbr_Bitmap_Size + 1) × 4), which may be less than or equal to the number of BSs in MOB_ NBR ADV.
Nbr_Bitmap_Index	(Nbr_Bitmap_Size +1) × 4	Each bit position in this bitmap corresponds to a BS Index of the corresponding MOB_NBR-ADV message, where the least significant bit corresponds to the first BS Index, each next significant bit corresponds to the next BS Index, the most significant bit corresponds to the BS Index of the last reported BS, and BSs with BS Index greater than the last reported BS are not reported and do not have a corresponding bit position in the bitmap. Bitmap position bit value: 0: the corresponding BS is not reported. 1: the corresponding BS is reported. When Use_Rsp_Bitmap_Index equals 1, Nbr_Bitmap_Index only includes reported BSs that were included in the MOB_NBR-ADV message but that were not included in the corresponding MOB_SCN-RSP message.
for(each ‘1’ in Nbr_Bitmap_Index){	—	—
if(Report_metric[Bit 0] == 1)	—	—
BS_CINR_mean	8	—
if(Report_metric[Bit 1] == 1)	—	—
BS_RSSI_mean	8	—
if(Report_metric[Bit 1] == 1)	—	—
Relative_delay	8	—
}	—	—
} else {	—	—
N_Neighbor_BS_Index	8	Number of neighboring BS that are included in MOB_NBR-ADV message.
If (N_ Neighbor_BS_Index != 0){	—	—
Configuration change count for MOB_NBR-ADV	8	Configuration Change Count value of referring MOB_NBR-ADV message.
}	—	—
for(j = 0; j < N_Neighbor_BS_Index; j++) {	—	—
Neighbor_BS_Index	8	BS index corresponds to position of BS in MOB_NBR-ADV message.
If(Report metric[Bit 0] == 1)	—	—
BS CINR mean	8	—

Table 148—MOB_SCN-REP message format *(continued)*

Syntax	Size (bit)	Notes
If(Report metric[Bit 1] == 1)	—	—
BS RSSI mean	8	—
If(Report metric[Bit 2] == 1)	—	—
Relative delay	8	—
}	—	—
}	—	—
N_ Neighbor_BS_Full	8	Number of neighboring BS that are using full 48 bits BSID.
for(*j* = 0; *j* < N_Neighbor_BS_Full; *j*++) {	—	—
Neighbor BSID	48	—
If(Report metric[Bit 0] == 1)	—	—
BS CINR mean	8	—
If(Report metric[Bit 1] == 1)	—	—
BS RSSI mean	8	—
If(Report metric[Bit 2] == 1)	—	—
Relative delay	8	—
}	—	—
if(Use_Rsp_Bitmap_Index == 1){	—	—
Rsp_Seq_Num	1	One-bit sequence number for the corresponding MOB_SCN-RSP message.
Reserved	1	Shall be set to zero.
Rsp_Bitmap_size	6	Size of Rsp_Bitmap_Index in nibbles ((Rsp_Bitmap_Size + 1) × 4), which may be less than or equal to the number of BSs in MOB_SCN-RSP.
Rsp_Bitmap_Index	(Rsp_Bitmap_Size + 1) × 4	Each bit position in this bitmap corresponds to a BS Index of the corresponding MOB_SCN-RSP message, where the least significant bit corresponds to the first BS Index, each next significant bit corresponds to the next BS Index, the most significant bit corresponds to the BS Index of the last reported BS, and BSs with BS Index greater than the last reported BS are not reported and do not have a corresponding bit position in the bitmap. Bitmap position bit value: 0: The corresponding BS is not reported. 1: The corresponding BS is reported.
for(each ‘1’ in Rsp_Bitmap_Index){	—	—
if(Report_metric[Bit 0] == 1)	—	—

Table 148—MOB_SCN-REP message format *(continued)*

Syntax	Size (bit)	Notes
BS_CINR_mean	8	—
if(Report_metric[Bit 1] == 1)	—	—
BS_RSSI_mean	8	—
if(Report_metric[Bit 2] == 1)	—	—
Relative_delay	8	—
}	—	—
}	—	—
Padding	*variable*	If needed for alignment to byte boundary.
TLV encoded information	*variable*	Optional.
}	—	—

An MS shall generate MOB_SCN-REP messages in the format shown in Table 148. The following parameters shall be included in the MOB_SCN-REP message:

Report mode

Action code for an MS's scan report of its measurement:

0: Event triggered report
1: Periodic report according to Scan report period of MOB_SCN-RSP

Report metric

Bitmap indicator of trigger metrics that the serving BS requests the MS to report. The serving BS shall indicate only the trigger metrics agreed during SBC-REQ/RSP negotiation. For each bit location, a value of 0 indicates the trigger metric is not included, while a value of '1' indicates the trigger metric is included in the message. The bitmap interpretation for the metrics shall be as follows:

Bit 0: BS CINR mean
Bit 1: BS RSSI mean
Bit 2: Relative delay
Bit 3: BS RTD; this metric shall be only measured on serving BS/anchor BS
Bits 4–7: *Reserved*; shall be set to zero

N_current_BSs

When FBSS/MDHO is supported, N_current_BSs is the number of BSs currently in the diversity set; when FBSS/MDHO is not supported or the MS has an empty diversity set, N_current_BSs is set to 1 (= serving /anchor BS).

Rsp_Seq_Num

Sequence number for the MOB_SCN-RSP message associated with a MOB_SCN-RSP BS Index bitmap (Rsp_Bitmap_Index), where a bit position in this bitmap corresponds to a BS index of the MOB_SCN-RSP message and where a BS index corresponds to the position of a BS in the MOB_SCN-RSP message.

Use_Nbr_Bitmap_Index
Indicates if the bitmap of BS indexes for MOB_NBR-ADV is used.

Use_Rsp_Bitmap_Index
Indicates if the bitmap of BS indexes for MOB_SCN-RSP is used.

Nbr_Bitmap_Index
Bitmap of BS indexes for the corresponding MOB_NBR-ADV message where each bit position corresponds to a BS Index of the corresponding MOB_NBR-ADV message, the least significant bit corresponds to the first BS Index, each next significant bit corresponds to the next BS Index in sequential order, the most significant bit corresponds to the BS Index of the last reported BS, and BSs with BS Index greater than the last reported BS are not reported and do not have a corresponding bit position in the bitmap. Bitmap position bit value of 1 indicates that the BS is reported and a bit value of 0 indicates that the BS is not reported.

When Use_Rsp_Bitmap_Index equals 1, Nbr_Bitmap_Index only includes BSs included in the MOB_NBR-ADV message but not included in the corresponding MOB_SCN-RSP message.

Rsp_Bitmap_Index
Bitmap of indexes for the corresponding MOB_SCN-RSP message, where each bit position corresponds to a BS Index of the corresponding MOB_SCN-RSP message, the least significant bit corresponds to the first BS Index, each next significant bit corresponds to the next BS Index in sequential order, the most significant bit corresponds to the BS Index of the last reported BS, and BSs with BS Index greater than the last reported BS are not reported and do not have a corresponding bit position in the bitmap. Bitmap position bit value of 1 indicates that the BS is reported and a bit value of 0 indicates that the BS is not reported.

This bitmap identifies BSs included in the corresponding MOB_SCN-RSP message, including BSs that are included in the MOB_NBR-ADV message that were included in the MOB_SCN-RSP message.

Temp BSID
Diversity set member ID assigned to this BS. When the MS has an empty diversity set or FBSS/MDHO is not supported, Temp BSID shall be set to 0.

N_Neighbor_BS_Index
Number of neighboring BS reported in this message and which are included in MOB_NBR-ADV message.

N_Neighbor_BS_Full
Number of neighboring BS reported in this message that are using full 48 bits BSID.

For each neighbor BS included in this message, the following parameters shall be included:

Configuration Change Count for MOB_NBR-ADV
The value of Configuration Change Count in MOB_NBR-ADV message referred in order to compress neighbor BSID.

Neighbor_BS_Index
BS index corresponds to position of BS in MOB_NBR-ADV message.

Neighbor BSID
Same as the Base Station ID parameter in the DL-MAP message of neighbor BS.

According to Report metric that MS indicates, the MOB_SCN-REP message may include the following parameters:

BS CINR mean

The BS CINR Mean parameter indicates the CINR measured by the MS from the particular BS. The value shall be interpreted as a signed byte with units of 0.5 dB. The measurement shall be performed on the subcarriers of the frame preamble that are active in the particular BS's segment and averaged over the measurement period.

BS RSSI mean

The BS RSSI Mean parameter indicates the Received Signal Strength measured by the MS from the particular BS. The value shall be interpreted as an unsigned byte with units of 0.25 dB, e.g., 0x00 is interpreted as –103.75 dBm. An MS shall be able to report values in the range –103.75 dBm to –40 dBm. The measurement shall be performed on the frame preamble and averaged over the measurement period.

Relative delay

This parameter indicates the delay of neighbor DL signals relative to the serving BS, as measured by the MS for the particular BS. The value shall be interpreted as a signed integer in units of samples.

BS RTD

The BS RTD parameter indicates the round trip delay (RTD) measured by the MS from the serving BS. RTD can be given by the latest time advance taken by MS. The value shall be interpreted as an unsigned byte with units of 1/Fs (see 10.3.4.3). This parameter shall be only measured on serving BS/anchor BS.

TLV tuples specified in 11.19 may be included into MOB_SCN-REP message. Information provided by *N*-th TLV of this type is related to *N*-th BS listed in the message.

The MOB_SCN-REP message shall include the following parameters encoded as TLV tuples:

HMAC/CMAC Tuple (see 11.1.2)

The HMAC/CMAC Tuple shall be the last attribute in the message.

6.3.2.3.46 MOB_ASC-REP (association result report) message

When association level 2 is used, the MS does not have to wait for RNG-RSP from the target BS after sending RNG-REQ or ranging code to the target BS. Instead, the RNG-RSP info may be sent by each target BS to the serving BS (over the backbone). The serving BS may aggregate all the RNG-RSP messages to a

single MOB_ASC-REP message, which the serving BS then sends to the MS. This message is transmitted using the Primary Management CID (see Table 149).

Table 149—MOB_ASC-REP message format

Syntax	Type	Size (bit)	Notes
MOB_ASC_REPORT_Message_format() {	—	—	—
Management Message Type = 66	—	8	—
N_Recommended_BS_Index	—	8	Number of neighboring BS, which are using BS index that corresponds to the position of BS in MOB_NBR-ADV message.
If(N_Recommended_BS_Index != 0){	—	—	—
Configuration change count for MOB_NBR-ADV	—	—	Configuration Change Count value of referring MOB_NBR-ADV message.
}	—	—	—
For(*j* = 0; *j* < N_Recommended_BS_Index; *j*++){	—	—	—
Neighbor_BS_Index	—	8	—
Timing adjust	1	32	—
Power level adjust	2	8	—
Offset frequency adjust	3	32	—
Ranging status	4	8	—
Service level prediction	5	8	—
}	—	—	—
N_Recommended_BS_Full	—	8	Number of neighboring BS that are using full 48 bits BSID.
For(*j* = 0; *j* < N_Recommended_BS_Full; *j*++){	—	—	—
Neighbor_BS_ID	—	48	—
Timing adjust	1	32	—
Power level adjust	2	8	—
Offset frequency adjust	3	32	—
Ranging status	4	8	—
Service level prediction	5	8	—
}	—	—	—
}	—	—	—

The following parameters shall be included in the MOB_ASC-REP message:

N_Recommended_BS_Index

Number of neighboring BSs reported in this message and which are included in MOB_NBR-ADV message. When the MS receives the MOB_ASC-REP message from BS, it shall compare the Configuration Change Count of the message with the one of the last received MOB_SCN-RSP message. If the MS detects a mismatch, it shall discard this message.

Configuration Change Count for MOB_NBR-ADV

The value of Configuration Change Count in MOB_NBR-ADV message referred in order to compress neighbor BSID.

Neighbor_BS_Index

BS index corresponds to position of BS in MOB_NBR-ADV message.

N_Recommended_BS_Full

Number of neighboring BSs reported in this message that are using full 48 bits BSID.

Neighbor_BS_ID

BSID of the neighboring BS with which the MS is associated.

Timing adjust

The time required to advance MS transmissions so frames arrive at the expected time instance at the neighbor BS.

Power level adjust

The power level offset adjustment required so that MS transmissions arrive at the desired level at the neighbor BS.

Offset frequency adjust

The relative frequency adjustment required so that MS transmissions arrive at the desired frequency at the neighbor BS.

Ranging status

Used to indicate whether MS ranging attempt is within acceptable limits of the neighbor BS.

Service level prediction

The service level prediction value indicates the level of service the MS can expect from this neighbor BS. The following encodings apply:

0 = No service possible for this MS.
1 = Some service is available for one or several service flows authorized for the MS.
2 = For each authorized service flow, a MAC connection can be established with QoS specified by the AuthorizedQoSParamSet.
3 = No service level prediction available.

6.3.2.3.47 MOB_BSHO-REQ (BS HO request) message

The BS may transmit a MOB_BSHO-REQ message when it wants to initiate an HO. An MS receiving this message may scan recommended neighbor BSs in this message. The message shall be transmitted on the Basic CID. See Table 150.

Table 150—MOB_BSHO-REQ message format

Syntax	Size (bit)	Notes
MOB_BSHO-REQ_Message_format() {	—	—
Management Message Type = 56	8	—
Mode	3	0b000: HO request 0b001: MDHO/FBSS request: Anchor BS update with CID update 0b010: MDHO/FBSS request: Anchor BS update without CID update 0b011: MDHO/FBSS request: Diversity set update with CID update 0b100: MDHO/FBSS request: Diversity set update without CID update 0b101: MDHO/FBSS request: Diversity set update with CID update for newly added BS 0b110: MDHO/FBSS request: Diversity set update with CID update and CQICH allocation for newly added BS 0b111: *Reserved*
Padding	5	Shall be set to zero.
If (Mode == 0b000) {	—	—
N_Recommended	8	—
HO operation mode	1	0: Recommended HO request. 1: Mandatory HO request.
Resource Retain Flag	1	0: MS resource release. 1: MS resource retain.
Unsolicited UL grant for HO-IND flag	1	0: BS will not allocate unsolicited UL grant for HO_IND 1: BS will allocate unsolicited UL grant for HO_IND after 'HO indication readiness time'
Padding	5	Shall be set to zero.
for (j = 0 ; j < N_Recommended; j++) {	—	N_Recommended can be derived from the known length of the message.
Neighbor BSID	48	—
Service level prediction	8	—
Preamble index/Subchannel Index	8	—
HO process optimization	8	—
Network Assisted HO supported	1	Indicates that the BS supports Network Assisted HO.

Table 150—MOB_BSHO-REQ message format *(continued)*

Syntax	Size (bit)	Notes
HO_ID_included_indicator	1	To indicate if the field HO_ID is included.
HO_authorization policy indicator	1	To indicate whether security-related negotiation is used in HO procedure. 0: Same authorization policy and MAC mode as in the serving BS. 1: The authorization policy for the target BS is negotiated.
Seamless HO mode flag	1	Indicates whether Seamless HO mode is supported 0: Not supported 1: Supported
If (HO_ID_included_indicator == 1) {	—	—
HO_ID	8	ID assigned for use in initial ranging to the target BS once this BS is selected as the target BS (see 11.5).
}	—	—
If (HO_authorization policy indicator == 1) {	—	—
HO_authorization_policy_support	8	Bit 0: RSA authorization Bit 1: EAP authorization Bit 2: *Reserved* Bit 3: HMAC supported Bit 4: CMAC supported Bit 5: 64-bit Short-HMAC Bit 6: 80-bit Short-HMAC Bit 7: 96-bit Short-HMAC
}	—	—
if(Seamless HO mode flag ==1){	—	—
CID update mode indicator	1	0: Autonomous derivation 1: Block allocation
Pre-allocated Basic CID	16	Basic CID allocated by the target BS.
Rejected Transport CID bitmap size	4	Length to be read (in bytes) 0: All the Transport CIDs are accepted 1–15: Bitmap size, in bytes
if(CID update mode indicator == 0){	—	—
Reserved	3	—
}	—	—
if(CID update mode indicator ==1){	—	—
N block	3	Number of blocks.
if(N block == 1){	—	—
First Transport CID in block	16	—
}	—	—

Table 150—MOB_BSHO-REQ message format *(continued)*

Syntax	Size (bit)	Notes
if(N block > 1){	—	—
for(*j* = 0; *j* < N block; *j*++){	—	—
First Transport CID in block	16	The first Transport CID in the block.
Number of Transport CIDs	8	Number of contiguous Transport CIDs in the block.
}	—	—
}	—	—
Rejected Transport CID bitmap	*variable*	This bitmap indicated Transport CID, which is not accepted by the BS. The length of the parameter is defined by **Rejected Transport CID bitmap size** field.
}	—	—
Seamless HO Ranging Initiation Deadline	8	Time allowed for the MS to transmit RNG-REQ at the target BS during seamless HO. The time is specified in units of 10 msec. Time starts at the time the message it is contained in (i.e., BSHO-REQ/RSP) is transmitted.
N_SAIDs	8	Number of SAIDs that need to be reassigned. Primary SAID is not counted. Primary SAID shall be the same as Basic CID. If only the primary SAID needs to be updated, N_SAID shall be set to 0.
for (*i* = 0; *i* < N_SAIDs; *i*++){	—	—
New SAID	16	New SAID to be used.
}	—	—
TEK Lifetime	32	Lifetime for the new TEKs at the TBS. Units: Seconds.
}	—	—
}	—	—
}	—	—
else if (Mode == 0b001) {	—	—
TEMP_BSID	3	TEMP BSID of the recommended anchor BS.
AK Change Indicator	1	To indicate whether the authorization key being used should change when switching to a new anchor BS. If set to 0, the MS should continue to use the AK currently in use. If set to 1, the MS should use the AK derived for use with the new anchor BS.
N_CIDs	8	Number of CIDs that need to be reassigned. For MDHO, N_CIDs shall be set to zero.
for (*i* = 0; *i* < N_CIDs; *i*++) {	—	—
New CID	16	New CID to be used after diversity set is updated.

Table 150—MOB_BSHO-REQ message format *(continued)*

Syntax	Size (bit)	Notes
}	—	—
N_SAIDs	8	Number of SAIDs that need to be reassigned.
For(*i* = 0; *i* < N_SAIDs; *i*++){		
New SAID	16	New SAID to be used after anchor BS is updated.
}	—	—
}	—	—
else if (Mode == 0b010) {	—	—
TEMP_BSID	3	TEMP BSID of the recommended anchor BS.
AK Change Indicator	1	To indicate whether the authorization key being used should change when switching to a new anchor BS. If set to 0, the MS should continue to use the AK currently in use. If set to 1, the MS should use the AK derived for use with the new anchor BS.
}	—	—
else if (Mode == 0b011) {	—	—
N_new_BSs	3	Number of new BSs that are recommended to be added to the diversity set of the MS.
for (*j* = 0; *j* < N_new_BSs; *j*++) {	—	—
Neighbor BSID	48	—
Temp BSID	3	Diversity set member ID assigned to this BS.
}	—	—
N_current_BSs	3	Number of BSs currently in the diversity set of the MS, which are recommended to be remained in the diversity set.
for (*j* = 0; *j* < N_current_BSs; *j*++) {	—	—
Temp BSID	3	Diversity set member ID assigned to this BS.
}	—	—
TEMP_BSID_Anchor	3	Temp BSID for the anchor BS.
AK Change Indicator	1	To indicate whether the authorization key being used should change when switching to a new anchor BS. If set to 0, the MS should continue to use the AK currently in use. If set to 1, the MS should use the AK derived for use with the new anchor BS.
N_CIDs	8	Number of CIDs that need to be reassigned.
for (*j* = 0; *j* < N_CIDs; *j*++) {	—	—

Table 150—MOB_BSHO-REQ message format *(continued)*

Syntax	Size (bit)	Notes
New_CID	16	New CID to be used after diversity set is updated.
}	—	—
N_SAIDs	8	Number of SAIDs that need to be reassigned.
For(*i* = 0; *i* < N_SAIDs; *i*++){		
New SAID	16	New SAID to be used after diversity set is updated.
}	—	—
}	—	—
else if (Mode == 0b100) {	—	—
N_new_BSs	3	Number of new BSs that are recommended to be added to the diversity set of the MS.
for (*j* = 0; *j* < N_new_BSs; *j*++) {	—	—
Neighbor BSID	48	—
Temp BSID	3	Diversity set member ID assigned to this BS.
}	—	—
N_current_BSs	3	Number of BSs currently in the diversity set of the MS, which are recommended to be remained in the diversity set.
for (*j* = 0; *j* < N_current_BSs; *j*++) {	—	—
Temp_ BSID	3	Diversity set member ID assigned to this BS.
}	—	—
TEMP_BSID_Anchor	3	Temp BSID for the anchor BS.
AK Change Indicator	1	To indicate whether the authorization key being used should change when switching to a new anchor BS. If set to 0, the MS should continue to use the AK currently in use. If set to 1, the MS should use the AK derived for use with the new anchor BS.
}	—	—
else if (Mode == 0b101) {	—	—
N_new_BSs	3	Number of new BSs that are recommended to be added to the diversity set of the MS.
N_CIDs	8	Number of CIDs that need to be reassigned.
N_SAIDs	8	Number of SAIDs that need to be reassigned.
for (*i* = 0; *i* < N_new_BSs; *i*++) {	—	—
Neighbor BS_ID	48	—
TEMP_BSID	3	Diversity set member ID assigned to this BS.

Table 150—MOB_BSHO-REQ message format *(continued)*

Syntax	Size (bit)	Notes
for (*j* = 0; *j* < N_CIDs; *j*++) {	—	—
New CID for BS_i	16	New CID to be used for new BS_i.
}	—	—
For(*i* = 0; *i* < N_SAIDs; *i*++){	—	—
New SAID for BS_i	16	New SAID to be used for new BS_i.
}	—	—
}	—	—
N_current_BSs	3	Number of BSs currently in the diversity set of the MS, which are recommended to be remained in the diversity set.
for (*i* = 0; *i* < N_current_BSs; *i*++) {	—	—
TEMP_BSID	3	Diversity set member ID assigned to this BS.
}	—	—
TEMP_BSID_Anchor	3	Temp BSID for the anchor BS.
AK Change Indicator	1	To indicate whether the authorization key being used should change when switching to a new anchor BS. If set to 0, the MS should continue to use the AK currently in use. If set to 1, the MS should use the AK derived for use with the new anchor BS.
}	—	—
else if (Mode == 0b110) {	—	—
N_new_BSs	3	Number of new BSs that are recommended to be added to the diversity set of the MS.
N_CIDs	8	Number of CIDs that need to be allocated.
N_SAIDs	8	Number of SAIDs that need to be reassigned.
for (*i* = 0; *i* < N_new_BSs; *i*++) {	—	—
Neighbor BS_ID	48	—
TEMP_BSID	3	Diversity set member ID assigned to this BS.
for (*j* = 0; *j* < N_CIDs; *j*++) {	—	—
New CID for BS_i	16	New CID to be used for new BS_i.
}	—	—
for(*i* = 0; *i* < N_SAIDs; *i*++){	—	—
New SAID for BS_i	16	New SAID to be used for new BS_i.
}	—	—

Table 150—MOB_BSHO-REQ message format *(continued)*

Syntax	Size (bit)	Notes
CQICH_ID	*variable*	Index to uniquely identify he CQICH resource assigned to the MS after the MS switched to the new anchor BS.
Feedback channel offset	6	Index to the fast-feedback channel region of the new anchor BS marked by UIUC.
Period (*p*)	2	A CQI feedback is transmitted on the CQICH every 2^p frames.
Frame offset	3	The MS starts reporting at the frame of which the number has the same 3 LSB as the specified frame offset. If the current frame is specified, the MS should start reporting in eight frames.
Duration (*d*)	3	A CQI feedback is transmitted on the CQI channels indexed by the CQICH_ID for 10×2^d frames. If d == 0b000, the CQI-CH is deallocated. If d == 0b111, the MS should report until the BS command for the MS to stop.
MIMO_permutation_feedback_cycle	2	0b00 = No MIMO and permutation mode feedback 0b01 = the MIMO and permutation mode indication shall be transmitted on the CQICH indexed by the CQICH_ID every 4 CQICH transmission opportunities allocated to the MS in this message. The first indication is sent on the 4th CQICH transmission opportunity allocated to the MS in this message. 0b10 = the MIMO mode and permultation mode indication shall be transmitted on the CQICH indexed by the CQICH_ID every 8 CQICH transmission opportunities allocated to the MS in this message. The first indication is sent on the 8th CQICH transmission opportunity allocated to the MS in this message. 0b11 = the MIMO mode and permultation mode indication shall be transmitted on the CQICH indexed by the CQICH_ID every 16 CQICH transmission opportunities allocated to the MS in this message. The first indication is sent on the 16th CQICH transmission opportunity allocated to the MS in this message.
}	—	—
N_current_BSs	3	Number of BSs currently in the diversity set of the MS, which are recommended to be remained in the diversity set.
for (i = 0; i < N_current_BSs; i++) {	—	—
TEMP_BSID	3	Diversity set member ID assigned to this BS.
}	—	—
TEMP_BSID_Anchor	3	Temp BSID for the anchor BS.

Table 150—MOB_BSHO-REQ message format *(continued)*

Syntax	Size (bit)	Notes
AK Change Indicator	1	To indicate whether the authorization key being used should change when switching to a new anchor BS. If set to 0, the MS should continue to use the AK currently in use. If set to 1, the MS should use the AK derived for use with the new anchor BS.
}	—	—
Action time	8	—
Padding	*variable*	Padding bits to ensure byte aligned.
TLV encoded information	*variable*	TLV-specific.
}	—	—

A BS shall generate MOB_BSHO-REQ messages in the format shown in Table 150. The following parameters shall be included in the MOB_BSHO-REQ message:

Mode

Indicates which HO mode is for this HO request.

0b000: HO request
0b001: MDHO/FBSS request: Anchor BS update with CID update
0b010: MDHO/FBSS request: Anchor BS update without CID update
0b011: MDHO/FBSS request: Diversity set update with CID update
0b100: MDHO/FBSS request: Diversity set update without CID update
0b101: MDHO/FBSS request: Diversity set update with CID update for newly added BS
0b110: MDHO/FBSS request: Diversity set update with CID update and CQICH allocation for newly added BS
0b111: *Reserved*

HO operation mode

Indicate the operation mode of this HO request as initiated and prescribed by BS.

0: Recommended HO request
1: Mandatory HO request. If HO operation mode is set to 1, BS shall include at least one recommended BS in the message (N_Recommended ≥ 1).

Resource Retain Flag

The Resource Retain Flag indicates whether the serving BS will retain or delete the connection information of the MS upon receiving MOB_HO-IND with HO_IND_type = 0b00. If the flag is set to 1, the serving BS will retain the MS's connection information during the time in Resource Retain Time field. If Resource Retain Flag = 1 and Resource Retain Time is not included as a TLV item in the message, then the serving BS and MS shall use the System Resource Retain Time timer. If the flag is set to 0, the serving BS will discard the MS's connection information.

Unsolicited UL Grant for HO-IND flag

The Unsolicited UL Grant for HO-IND flag indicates whether the serving BS will grant an unsolicited UL allocation for MS transmission of MOB_HO-IND message. If the Unsolicited

UL Grant for HO-IND flag is set to 1, the serving BS will grant an unsolicited UL allocation for MOB_HO-IND message after expiration of Handover Indication Readiness Timer (see 11.7.12.6).

If the Unsolicited UL Grant for HO-IND flag is set to 0, then the MS shall not expect any unsolicited UL grant.

Action Time

For HO, this value is defined as number of frames until the Target BS allocates a dedicated transmission opportunity for RNG-REQ message to be transmitted by the MS using Fast_Ranging_IE. Dedicated allocation for transmission of RNG-REQ means that channel parameters for that BS learned by the MS before HO stay valid and can be reused during actual Network Re-entry without preceding CDMA-based Ranging. Final Action Time shall be decided by the Serving BS based on the information obtained from potential Target BSs over the backbone network. A value of zero indicates no opportunity to allocate Fast Ranging IE in any candidate target BS.

For MDHO/FBSS, this is the time of update of Anchor BS and/or Diversity Set. A value of zero in this parameter signifies that this parameter shall be ignored.

For Mode = 0b00, for each recommended neighbor BS, the following parameters shall be included:

Network Assisted HO supported

Indicates that the BS supports Network Assisted HO, 1 = supported, 0 = not supported

Neighbor BSID

Same as the Base Station ID parameter in the DL-MAP message of neighbor BS. This may include the serving BS.

Preamble index/ Subchannel Index

For the OFDMA PHY this parameter defines the PHY-specific preamble for the neighbor BS. For the OFDM PHY the 5 LSB contain the DL subchannel index (as defined in Table 248) used in the neighbor BS's sector. The 3 MSB shall be reserved and set to 0b000.

Service level prediction

The service level prediction value indicates the level of service the MS can expect from this BS. The following encodings apply:

0 = No service possible for this MS.
1 = Some service is available for one or several service flows authorized for the MS.
2 = For each authorized service flow, a MAC connection can be established with QoS specified by the AuthorizedQoSParamSet.
3 = No service level prediction available.

HO process optimization

HO Process Optimization is provided as part of this message is indicative only. HO process requirements may change at time of actual HO. For each Bit location, a value of 0 indicates the associated reentry management messages shall be required, a value of 1 indicates the reentry management message may be omitted. Regardless of the HO Process Optimization TLV settings, the target BS may send unsolicited SBC-RSP and/ or REG-RSP management messages:

Bit 0: Omit SBC-REQ/RSP management messages during reentry processing

Bit 1:Omit PKM Authentication phase except TEK phase during current reentry processing
Bit 2:Omit PKM TEK creation phase during reentry processing
Bit 3:Omit Network Address Acquisition management messages during current reentry processing
Bit 4:Omit Time of Day Acquisition management messages during current reentry processing
Bit 5:Omit TFTP management messages during current reentry processing
Bit 6:Full service and operational state transfer or sharing between serving BS and target BS (All static and dynamic context, e.g., ARQ window contents, timers, counters, state machines)
Bit 7:Omit REG-REQ/RSP management during current re-entry processing

For Mode != 0b000, the following parameters shall be included:

N_new_BSs
Number of new BSs that are recommended to be added to the diversity set of the MS.

N_CID
Number of CIDs that need to be allocated.

TEMP BSID
Index to diversity set for active BS ranging from 0 to 7.

New CID
The New CIDs shall be set as follows: the first CID in the list shall be Basic CID; the second CID in the list shall be Primary Management CID, the third CID in the list shall be Secondary Management CID if secondary management connection is established for the MS at the current serving BS. The remaining CIDs shall be Transport CIDs, Multicast Polling CIDs are enumerated by the ascending order of corresponding current SFIDs. The MS shall store the CIDs associated with the newly added BS and use the CIDs when the newly added BS becomes the anchor BS.

N_SAIDs
Number of SAIDs that need to be assigned.

New SAID
New SAIDs are enumerated by the ascending order of corresponding current SAIDs. The MS shall store the SAIDs associated with the newly added BS and use the SAIDs when the newly added BS becomes the anchor BS.

HO_ID included indicator
Indicates whether HO_ID is included in this message.

HO_ID
ID assigned for use in initial ranging to the target BS once this BS is selected as the target BS (see 11.5).

Seamless HO mode flag
Indicates whether Seamless HO is performed at the recommended neighbor BS. When the flag set to 1, the Pre-allocated Basic CID is included in the message.

Pre-allocated Basic CID
Basic CID allocated by recommended neighbor BS.

Seamless HO Ranging Initiation Deadline

Time allowed for the MS to transmit RNG-REQ at the target BS during seamless HO. The time is specified in units of 10 msec. Time starts at the time the message it is contained in (i.e., BSHO-REQ/RSP) is transmitted.

TEK Lifetime

This parameter is used for setting the lifetime of the new TEKs at the target BS. See 7.2.2.2.6.1 for more details on how the lifetime of new TEKs at the target BS is calculated.

N_SAIDs

Number of SAIDs that need to be re-assigned at the target BS.

New SAID

New SAIDs are enumerated by the ascending order of corresponding current SAIDs.

AK Change Indicator

Indicates whether the authorization key being used should change when switching to a new anchor BS. If set to 0, the MS should continue to use the AK currently in use; if set to 1, the MS should use the AK derived for use with the new anchor BS.

The MOB_BSHO-REQ may contain the following TLV:

Resource Retain Time (see 11.15.1)

For Mode = 0b00, the MOB_BSHO-REQ may contain the following TLV:

Additional Action Time (see 11.15.3)

Indicates a specific action time for each Neighbor BS listed in this message. The action times included in this TLV shall be ordered according to the Neighbor BS listed in this message.

The MOB_BSHO-REQ message shall include the following parameter encoded as TLV tuples:

HMAC/CMAC Tuple (see 11.1.2)

The HMAC/CMAC Tuple shall be the last attribute in the message.

6.3.2.3.48 MOB_MSHO-REQ (MS HO request) message

The MS may transmit a MOB_MSHO-REQ message when it wants to initiate an HO. The message shall be transmitted on the Basic CID (see Table 151).

Table 151—MOB_MSHO-REQ message format

Syntax	Size (bit)	Notes
MOB_MSHO-REQ_Message_format() {	—	—
Management Message Type = 57	8	—
Report metric	7	Bitmap indicating presence of metric in message Bit 0: BS CINR mean Bit 1: BS RSSI mean Bit 2: Relative delay Bit 3: BS RTD; this metric shall be only measured on serving BS/anchor BS. Bits 4–6: *Reserved*; shall be set to zero.
Arrival Time Difference Indication	1	0: If the MS is transmitting this message to request HO. 1: If the MS is transmitting this message to send MDHO/FBSS request (i.e., Anchor BS update or Diversity Set update).
N_New_BS_Index	8	Number of new recommended BSs that are included in MOB_NBR-ADV message.
If(N_New_BS_Index != 0){	—	—
Configuration change count for MOB_NBR-ADV	8	Configuration Change Count value of referring MOB_NBR-ADV message.
}	—	—
For(j = 0; j < N_New_BS_Index; j++){	—	—
Neighbor_BS_Index	8	—
Preamble index/ Preamble Present and Subchannel Index	8	For the OFDMA PHY this parameter defines the PHY-specific preamble for the neighbor BS. For the OFDM PHY the 5 LSB contain the active DL subchannel index for the neighbor BS. The 3 MSB shall be reserved and set to 0b000.
If(Report metric[Bit 0] == 1)	—	—
BS CINR mean	8	—
If(Report metric[Bit 1] == 1)	—	—
BS RSSI mean	8	—
If(Report metric[Bit 2] == 1)	—	—
Relative delay	8	—
Reserved	4	Shall be set to zero.
If (Arrival Time Difference Indication == 1) {	—	—

Table 151—MOB_MSHO-REQ message format *(continued)*

Syntax	Size (bit)	Notes
Arrival Time Difference (t)	4	Relative difference in arrival time between the neighbor BS and the anchor BS, in terms of fraction of CP.
}	—	—
}	—	—
N_New_BS_Full	8	—
For(*j* = 0; *j* < N_New_BS_Full; *j*++){	—	—
Neighbor_BS_ID	48	—
Preamble index/ Preamble Present and Sub-channel Index	8	For the OFDMA PHY this parameter defines the PHY-specific preamble for the neighbor BS. For the OFDM PHY the 5 LSBs contain the active DL subchannel index for the neighbor BS. The 3 MSBs shall be reserved and set to 0b000.
If (Report metric [Bit 0] == 1)	—	—
BS CINR mean	8	—
If(Report metric[Bit 1] == 1)	—	—
BS RSSI mean	8	—
If(Report metric[Bit 2] == 1)	—	—
Relative delay	8	—
Reserved	4	Shall be set to zero.
If (Arrival Time Difference Indication == 1) {	—	—
Arrival Time Difference (t)	4	Relative difference in arrival time between the neighbor BS and the anchor BS, in terms of fraction of CP.
}	—	—
}	—	—
N_current_BSs	3	When FBSS/MDHO is supported and the MS has nonempty diversity set, N_current_BSs is the number of BSs that are currently in the diversity set of the MS When FBSS/MDHO is not supported or the MS has an empty diversity set, N_current_BSs is set to 1.
Padding	1	Shall be set to zero.
For (*j* = 0 ; *j* < N_current_BSs; *j*++) {	—	—
Temp BSID	4	Diversity set member ID assigned to this BS. When the MS has an empty diversity set or FBSS/MDHO is not supported, Temp BSID shall be set to 0.
If(Report metric[Bit 0] == 1)	—	—

Table 151—MOB_MSHO-REQ message format *(continued)*

Syntax	Size (bit)	Notes
BS CINR mean	8	—
If(Report metric[Bit 1] == 1)	—	—
BS RSSI mean	8	—
If(Report metric[Bit 2] == 1)	—	—
Relative delay	8	Only when FBSS/MDHO is in progress, this field will include the relative delay of BSs currently in the diversity set, except anchor BS.
If(Report metric[Bit 3] == 1)	—	—
BS RTD	8	This field will include the RTD of the serving BS/anchor BS.
}	—	—
Padding	*variable*	Padding bits to ensure byte aligned.
TLV encoded information	*variable*	—
}	—	—

An MS shall generate MOB_MSHO-REQ messages in the format shown in Table 151. The following parameters shall be included in the MOB_MSHO-REQ message:

Report metric

Bitmap indicator of trigger metrics that the MS reports in this message. MS shall indicate only the trigger metrics agreed during SBC-REQ/RSP negotiation. For each bit location, a value of 0 indicates the trigger metric should not be included, while a value of 1 indicates the trigger metric should be included in the message. The bitmap interpretation for the metrics shall be:

Bit 0: BS CINR mean
Bit 1: BS RSSI mean
Bit 2: Relative delay
Bit 3: BS RTD; this metric shall be only measured on serving BS/anchor BS
Bits 4–7: *Reserved*; shall be set to zero

N_New_BS_Index

Number of neighboring BSs to be considered for handover, which are included in MOB_NBR-ADV message.

N_New_BS_Full

The number of neighboring BSs to be considered for handover, which are identified by full 48 bit BSID.

For each recommended neighbor BS, the following parameters shall be included:

Configuration Change Count for MOB_NBR-ADV
The value of Configuration Change Count in MOB_NBR-ADV message referred in order to compress neighbor BSID.

Neighbor_BS_Index
BS index corresponds to position of BS in MOB_NBR-ADV message.

Neighbor BSID
Same as the Base Station ID parameter in the DL-MAP message of the neighbor BS.

Preamble index/ Subchannel Index
For the OFDMA PHY this parameter defines the PHY-specific preamble for the neighbor BS. For the OFDM PHY the 5 LSB contain the DL subchannel index (as defined in Table 248) used in the neighbor BS's sector. The 3 MSB shall be reserved and set to 0.

According to Report metric that MS indicates, the MOB_MSHO-REQ message includes the following parameters:

BS CINR mean
The BS CINR Mean parameter indicates the CINR in dB measured at the MS on the DL signal of a particular BS. The value shall be interpreted as a signed byte with the resolution of 0.5 dB. The measurement shall be performed on the subcarriers of the frame preamble that are active in the particular BS's segment and averaged over the measurement period.

BS RSSI mean
The BS RSSI Mean parameter indicates the Received Signal Strength measured by the MS from the particular BS. The value shall be interpreted as an unsigned byte with units of 0.25 dB, e.g., 0x00 is interpreted as –103.75 dBm. An MS shall be able to report values in the range of –103.75 dBm to –40 dBm. The measurement shall be performed on the frame preamble and averaged over the measurement period.

Relative delay
This parameter indicates the delay of neighbor DL signals relative to the serving BS, as measured by the MS for the particular BS. The value shall be interpreted as a signed integer in units of samples.

BS RTD
The BS RTD parameter indicates the round trip delay (RTD) measured by the MS from the serving BS. RTD can be given by the latest time advance taken by MS. The value shall be interpreted as an unsigned byte with units of 1/Fs (see 10.3.4.3). This parameter shall be only measured on serving BS/anchor BS.

Arrival Time Difference
The Arrival Time Difference parameter indicates the delay of DL signal relative to the serving BS, as measured by the MS for the neighbor BS. For OFDM and OFDMA PHY mode, this value shall be interpreted as a signed fraction with a range of +7/8 to –1 one cyclic prefix time of the serving BS. A positive value indicates that the signal of the neighbor BS arrived after that of the serving BS (for example, the value of 0x02 indicates that the neighbor signal is delayed by 25% ±6.25% of the CP).

When the MS supports FBSS/MDHO and has a nonempty diversity set, the MS shall include the following parameters for each active BS. When the MS does not support FBSS/MDHO or has an empty active, the MS shall include the following parameters for the current serving BS.

Temp BSID
When the MS support FBSS/MDHO and has a nonempty diversity set, Temp BSID is the diversity set member ID. When the MS does not support FBSS/MDHO or has an empty diversity set, Temp BSID shall be set to 0.

BS CINR mean
The BS CINR Mean parameter indicates the CINR in dB measured at the MS on the DL signal of a particular BS. The value shall be interpreted as a signed byte with the resolution of 0.5 dB. The measurement shall be performed on the frame preamble and averaged over the measurement period.

The MOB_MSHO-REQ message shall include the following parameters encoded as TLV tuples:

HMAC/CMAC Tuple (see 11.1.2)
The HMAC/CMAC Tuple shall be the last attribute in the message.

6.3.2.3.49 MOB_BSHO-RSP (BS HO response) message

The BS shall transmit a MOB_BSHO-RSP message upon reception of MOB_MSHO-REQ message. The message shall be transmitted on the Basic CID. See Table 152.

Table 152—MOB_BSHO-RSP message format

Syntax	Size (bit)	Notes
MOB_BSHO-RSP_Message_format() {	—	—
Management Message Type = 58	8	—
Mode	3	0b000: HO request 0b001: MDHO/FBSS request: Anchor BS update with CID update 0b010: MDHO/FBSS request: Anchor BS update without CID update 0b011: MDHO/FBSS request: Diversity set update with CID update 0b100: MDHO/FBSS request: Diversity set update without CID update 0b101: MDHO/FBSS request: Diversity set update with CID update for newly added BS 0b110: MDHO/FBSS request: Diversity set update with CID update and CQICH allocation for newly added BS 0b111: MS HO request not recommended (BS in list unavailable)
Reserved	5	Shall be set to zero.
If (Mode == 0b000) {	—	—
N_Recommended	8	—

Table 152—MOB_BSHO-RSP message format *(continued)*

Syntax	Size (bit)	Notes
HO operation mode	1	0: Recommended HO response. 1: Mandatory HO response.
Resource Retain Flag	1	0: Release connection information. 1: Retain connection information.
Unsolicited UL grant for HO-IND flag	1	0: BS will not allocate unsolicited UL grant for HO_IND. 1: BS will allocate unsolicited UL grant for HO indication after "HO indication readiness time."
Reserved	5	Shall be set to zero.
For (j = 0; j < N_Recommended; j++) {	—	Neighbor BSs shall be presented in an order so that the first presented is the one most recommended and the last presented is the least recommended.
Neighbor BSID	48	—
Preamble index/ Preamble Present and Subchannel Index	8	For the OFDMA PHY this parameter defines the PHY-specific preamble for the neighbor BS. For the OFDM PHY the 5 LSB contain the active DL subchannel index for the neighbor BS. The 3 MSB shall be reserved and set to 0b000.
Service level prediction	8	—
HO process optimization	8	—
Network Assisted HO supported	1	Indicates that the BS supports Network Assisted HO.
HO_ID_included_indicator	1	Indicates if the field HO_ID is included.
HO authorization policy indicator	1	To indicate whether security-related negotiation is used in HO procedure. 0: Same authorization policy and MAC mode as in the serving BS. 1: The authorization policy for the target BS is negotiated.
Seamless HO mode flag	1	Indicates whether Seamless HO mode is supported 0: Not supported 1: Supported
Reserved	4	Shall be set to zero.
If (HO_ID_included_indicator == 1) {	—	—
HO_ID	8	ID assigned for use in initial ranging to the target BS once this BS is selected as the target BS.
}	—	—
If (HO_authorization policy indicator == 1) {	—	—

Table 152—MOB_BSHO-RSP message format *(continued)*

Syntax	Size (bit)	Notes
HO_authorization_policy_support	8	Bit 0: RSA authorization Bit 1: EAP authorization Bit 2: *Reserved* Bit 3: HMAC supported Bit 4: CMAC supported Bit 5: 64-bit Short-HMAC Bit 6: 80-bit Short-HMAC Bit 7: 96-bit Short-HMAC
}	—	—
}	—	—
	—	—
if(Seamless HO mode flag == 1){	—	—
CID update mode indicator	1	0: Autonomous derivation 1: Block allocation
Pre-allocated Basic CID	16	Basic CID allocated by the target BS.
Rejected Transport CID bitmap size	4	Length to be read (in bytes) 0: All the Transport CIDs are accepted 1–15: Bitmap size in bytes
if(CID update mode indicator == 0){	—	—
Reserved	3	—
}		—
if(CID update mode indicator == 1){	—	—
N_block	3	Number of blocks
if(N_block == 1){	—	—
First Transport CID in block	16	—
}	—	—
if(N_block > 1){	—	—
for(*j* = 0; *j* < N_block; *j*++){	—	—
First Transport CID in block	16	The first Transport CID in the block
Number of Transport CIDs	8	Number of contiguous Transport CIDs in the block
}	—	—
}	—	—
Rejected Transport CID bitmap	*variable*	This bitmap indicates Transport CID which is not accepted by the BS. The length of the parameter is defined by the **Rejected Transport CID** bitmap size field.
}	—	—

Table 152—MOB_BSHO-RSP message format *(continued)*

Syntax	Size (bit)	Notes
Seamless HO Ranging Initiation Deadline	8	Time allowed for the MS to transmit RNG-REQ at the target BS during seamless HO. The time is specified in units of 10 milliseconds. Time starts at the time the message it is contained in (i.e., BSHO-REQ/ RSP) is transmitted.
N_SAIDS	8	Number of SAIDs that need to be reassigned. Primary SAID is not counted. Primary SAID shall be the same as Basic CID. If only the primary SAID needs to be updated, N_SAID shall be set to 0.
for(*i* = 0; *i* < N_SAIDS; *i*++){	—	—
New SAID	16	New SAID to be used.
}	—	—
TEK Lifetime	32	Lifetime for the new TEKs at the Target BS. Units: Seconds.
}	—	—
}	—	—
else if (Mode == 0b001) {	—	—
Temp BSID	3	TEMP BSID of the recommended anchor BS.
AK Change Indicator	1	To indicate whether the authorization key being used should change when switching to a new anchor BS. If set to 0, the MS should continue to use the AK currently in use. If set to 1, the MS should use the AK derived for use with the new anchor BS.
N_CIDs	8	Number of CIDs that need to be reassigned. For MDHO, N_CIDs shall be set to zero.
For (*i* = 0; *i* < N_CIDs; *i*++) {	—	—
New CID	16	New CID to be used after diversity set is updated.
}	—	—
N_SAIDs	8	Number of SAIDs that need to be reassigned.
For(*i* = 0; *i* < N_SAIDs; *i*++){	—	—
New SAID	16	New SAID to be used after the anchor BS is updated.
}	—	—
}	—	—
else if (Mode == 0b010) {	—	—

Table 152—MOB_BSHO-RSP message format *(continued)*

Syntax	Size (bit)	Notes
Temp BSID	3	TEMP BSID of the recommended anchor BS.
AK Change Indicator	1	To indicate whether the authorization key being used should change when switching to a new anchor BS. If set to 0, the MS should continue to use the AK currently in use. If set to 1, the MS should use the AK derived for use with the new anchor BS.
}	—	—
else if (Mode == 0b011) {	—	—
N_new_BSs	3	Number of new BSs that are recommended to be added to the diversity set of the MS.
For (j = 0; j < N_new_BSs; j++) {	—	—
Neighbor BSID	48	—
Temp BSID	3	Diversity set member ID assigned to this BS.
}	—	—
N_current_BSs	3	Number of BSs currently in the diversity set of the MS that are recommended to remain in the diversity set.
For (j = 0; j < N_current_BSs; j++) {	—	—
Temp BSID	3	Diversity set member ID assigned to this BS.
}	—	—
TEMP_BSID_Anchor	3	Temp BSID for the anchor BS.
AK Change Indicator	1	To indicate whether the authorization key being used should change when switching to a new anchor BS. If set to 0, the MS should continue to use the AK currently in use. If set to 1, the MS should use the AK derived for use with the new anchor BS.
N_CIDs	8	Number of CIDs that need to be reassigned.
For (j = 0; j < N_CIDs; j++) {	—	—
New_CID	16	New CID to be used after diversity set is updated.
}	—	—
N_SAIDs	8	Number of SAIDs that need to be reassigned.
For(i = 0; i < N_SAIDs; i++){	—	—
New SAID	16	New SAID to be used after diversity set is updated.
}	—	—

Table 152—MOB_BSHO-RSP message format *(continued)*

Syntax	Size (bit)	Notes
}	—	—
else if (Mode == 0b100) {	—	—
N_new_BSs	3	Number of new BSs that are recommended to be added to the diversity set of the MS.
For (*j* = 0; *j* < N_new_BSs; *j*++) {	—	—
Neighbor BSID	48	—
Temp BSID	3	Diversity set member ID assigned to this BS.
}	—	—
N_current_BSs	3	Number of BSs currently in the diversity set of the MS, which are recommended to be remained in the diversity set.
For (*j* = 0; *j* < N_current_BSs; *j*++) {	—	—
Temp BSID	3	Diversity set member ID assigned to this BS.
}	—	—
TEMP_BSID_Anchor	3	Temp BSID for the anchor BS.
AK Change Indicator	1	To indicate whether the authorization key being used should change when switching to a new anchor BS. If set to 0, the MS should continue to use the AK currently in use. If set to 1, the MS should use the AK derived for use with the new anchor BS.
}	—	—
else if (Mode == 0b101) {	—	—
N_new_BSs	3	Number of new BSs that are recommended to be added to the diversity set of the MS.
N_CIDs	8	Number of CIDs that need to be reassigned.
N_SAIDs	8	Number of SAIDs that need to be reassigned.
for (*i* = 0; *i* < N_new_BSs; *i*++) {	—	—
Neighbor BSID	48	—
TEMP_BSID	3	Diversity set member ID assigned to this BS.
for (*j* = 0; *j* < N_CIDs; *j*++) {	—	—
New CID for BS_i	16	New CID to be used for new BS_i.
}	—	—
for(*j* = 0; *j* < N_SAIDs; *j*++){	—	—
New SAID for BS_i	16	New SAID to be used for new BS_i.
}	—	—

Table 152—MOB_BSHO-RSP message format *(continued)*

Syntax	Size (bit)	Notes
}	—	—
N_current_BSs	3	Number of BSs currently in the diversity set of the MS that are recommended to remain in the diversity set.
for (*j* = 0; *j* < N_current_BSs; *j*++) {	—	—
TEMP_BSID	3	Diversity set member ID assigned to this BS.
}	—	—
TEMP_BSID_Anchor	3	Temp BSID for the anchor BS.
AK Change Indicator	1	To indicate whether the authorization key being used should change when switching to a new anchor BS. If set to 0, the MS should continue to use the AK currently in use. If set to 1, the MS should use the AK derived for use with the new anchor BS.
}	—	—
else if (Mode == 0b110) {	—	—
N_new_BSs	3	Number of new BSs that are recommended to be added to the diversity set of the MS.
N_CIDs	8	Number of CIDs that need to be reassigned.
N_SAIDs	8	Number of SAIDs need to be reassigned.
for (*i* = 0; *i* < N_new_BSs; *i*++) {	—	—
Neighbor BSID	48	—
TEMP_BSID	3	Diversity set member ID assigned to this BS.
for (*j* = 0; *j* < N_CIDs; *j*++) {	—	—
New CID for BS_i	16	New CID to be used for new BS_i.
}	—	—
for(*i* = 0; *i* < N_SAIDs; *i*++){	—	—
New SAID for BS_i	16	New SAID to be used for new BS_i.
}	—	—
CQICH_ID	*variable*	Index to uniquely identify the CQICH resource assigned to the MS after the MS switched to the new anchor BS.
Feedback channel offset	6	Index to the fast-feedback channel region of the new anchor BS marked by UIUC.
Period (=p)	2	A CQI feedback is transmitted on the CQICH every 2^p frames.

Table 152—MOB_BSHO-RSP message format *(continued)*

Syntax	Size (bit)	Notes
Frame offset	3	The MS starts reporting at the frame of which the number has the same 3 LSB as the specified frame offset. If the current frame is specified, the MS should start reporting in eight frames.
Duration (=d)	3	A CQI feedback is transmitted on the CQI channels indexed by the CQICH_ID for 10×2^d frames. If d == 0b000, the CQI-CH is deallocated. If d == 0b111, the MS should report until the BS command for the MS to stop.
MIMO_permutation_feedback_cycle	2	0b00 = No MIMO and permutation mode feedback 0b01 = the MIMO and permutation mode indication shall be transmitted on the CQICH indexed by the CQICH_ID every four CQICH transmission opportunities allocated to the MS in this message. The first indication is sent on the 4th CQICH transmission opportunity allocated to the MS in this message. 0b10 = the MIMO mode and permultation mode indication shall be transmitted on the CQICH indexed by the CQICH_ID every eight CQICH transmission opportunities allocated to the MS in this message. The first indication is sent on the 8th CQICH transmission opportunity allocated to the MS in this message. 0b11 = the MIMO mode and permultation mode indication shall be transmitted on the CQICH indexed by the CQICH_ID every 16 CQICH transmission opportunities allocated to the MS in this message. The first indication is sent on the 16th CQICH transmission opportunity allocated to the MS in this message.
}	—	—
N_current_BSs	3	Number of BSs currently in the diversity set of the MS that are recommended to remain in the diversity set.
for (*i* = 0; *i* < N_current_BSs; *i*++) {	—	—
TEMP_BSID	3	Diversity set member ID assigned to this BS.
}	—	—
TEMP_BSID_Anchor	3	Temp BSID for the anchor BS.

Table 152—MOB_BSHO-RSP message format *(continued)*

Syntax	Size (bit)	Notes
AK Change Indicator	1	To indicate whether the authorization key being used should change when switching to a new anchor BS. If set to 0, the MS should continue to use the AK currently in use. If set to 1, the MS should use the AK derived for use with the new anchor BS.
}	—	—
Action time	8	—
Padding	*variable*	Padding bits to ensure byte aligned.
TLV encoded information	*variable*	TLV-specific.
}	—	—

A BS shall generate MOB_BSHO-RSP messages in the format shown in Table 152. The following parameters shall be included in the MOB_BSHO-RSP message:

HO operation mode

Indicate the operation mode of this HO response as prescribed by BS.

0: Recommended HO response.
1: Mandatory HO response. If HO operation mode is set to 1, BS shall include at least one recommended BS in the message (N_Recommended ≥ 1).

Action Time

This value is defined as the number of frames until the Target BS allocates, using the Fast Ranging IE, a dedicated transmission opportunity for a RNG-REQ message to be transmitted by the MS. A non-zero value of this parameter means that, if the MS re-enters the network at the Target BS, the MS may skip CDMA-based ranging and apply the channel parameters for the Target BS that the MS acquired before HO when sending the RNG-REQ message. This parameter is decided by the Serving BS based on the information obtained from potential Target BSs over the backbone network. A value of zero indicates no opportunity to allocate Fast Ranging IE in any candidate target BS.

For MDHO/FBSS, this is the time of update of Anchor BS and/or Diversity Set. A value of zero in this parameter signifies that this parameter shall be ignored.

For MS handover request not recommended (Mode == 0b111), Action Time is the number of frames that the BS suggests MS wait before transmitting a next MOB_MSHO-REQ or MOB_HO-IND. If the action timer is equal to 0, MS may transmit a revised MOB_MSHO-REQ or MOB_HO-IND immediately.

Action Time included in this message is calculated from the beginning of the frame where this message was received.

Resource Retain Flag

The Resource Retain Flag indicates whether the serving BS will retain or delete the connection information of the MS upon receiving MOB_HO-IND with HO_IND_type = 0b00. If the flag is set to 1, the serving BS will retain the MS's connection information during the time in Resource Retain Time field. If Resource Retain Flag = 1 then the serving BS and MS shall use the System Resource Retain Time timer. If the flag is set to 0, the serving BS will discard the MS's connection information.

For Mode = 0b000 for each recommended neighbor BS, the following parameters shall be included,

Unsolicited UL Grant for HO-IND flag

The Unsolicited UL Grant for HO-IND flag indicates whether the serving BS will grant an unsolicited UL allocation for MS transmission of MOB_HO-IND message. If the Unsolicited UL Grant for HO-IND flag is set to 1, the serving BS will grant an unsolicited UL allocation for MOB_HO-IND message after expiration of Handover Indication Readiness Timer (see 11.7.12.6).

If the Unsolicited UL Grant for HO-IND flag is set to 0, then the MS shall not expect any unsolicited UL grant.

NeighborBSID

Same as the **Base Station ID** parameter in the DL-MAP message of neighbor BS. This may include the serving BS.

Preamble index/ Subchannel Index

For the OFDMA PHY this parameter defines the PHY-specific preamble for the neighbor BS. For the OFDM PHY the 5 LSB contain the DL subchannel index (as defined in Table 248) used in the neighbor BS's sector. The 3 MSB shall be reserved and set to 0.

Service level prediction

The service level prediction value indicates the level of service the MS can expect from this BS. The following encodings apply:

0 = No service possible for this MS
1 = Some service is available for one or several service flows authorized for the MS.
2 = For each authorized service flow, a MAC connection can be established with QoS specified by the AuthorizedQoSParamSet.
3 = No service level prediction available.

HO process optimization

HO Process Optimization is provided as part of this message is indicative only. HO process requirements may change at time of actual HO. For each Bit location, a value of 0 indicates the associated reentry management messages shall be required, a value of 1 indicates the reentry management message may be omitted. Regardless of the HO Process Optimization TLV settings, the target BS may send unsolicited SBC-RSP and/ or REG-RSP management messages:

Bit 0:Omit SBC-REQ/RSP management messages during reentry processing
Bit 1:Omit PKM Authentication phase except TEK phase during current reentry processing
Bit 2:Omit PKM TEK creation phase during reentry processing
Bit 3:Omit Network Address Acquisition management messages during current reentry processing

Bit 4:Omit Time of Day Acquisition management messages during current reentry processing
Bit 5:Omit TFTP management messages during current reentry processing
Bit 6:Full service and operational state transfer or sharing between serving BS and target BS (ARQ, timers, counters, MAC state machines, etc.)
Bit 7:Omit REG-REQ/RSP management during current re-entry processing

HO_ID_included_indicator
Indicates whether HO_ID is included in this message.

Seamless HO mode flag
Indicates whether Seamless HO is performed at the recommended neighbor BS. When the flag set to 1, the Pre-allocated Basic CID is included in the message.

Pre-allocated Basic CID
Basic CID allocated by recommended neighbor BS.

The MOB_BSHO-RSP may contain the following TLV:

Resource Retain Time (see 11.15.1)

For Mode = 0b00, the MOB_BSHO-RSP may contain the following TLV:

Additional Action Time (see 11.15.3)
Indicates a specific action time for each Neighbor BS listed in this message. The action times included in this TLV shall be ordered according to the Neighbor BS listed in this message.

The MOB_BSHO-RSP message shall include the following parameter encoded as TLV tuples:

HMAC/CMAC Tuple (see 11.1.2)
The HMAC/CMAC Tuple shall be the last attribute in the message.

For Mode != 0b000, the following parameter shall be included:

AK Change Indicator
Indicates whether the authorization key being used should change when switching to a new anchor BS. If set to 0, the MS should continue to use the AK currently in use; if set to 1, the MS should use the AK derived for use with the new anchor BS.

For Mode 0b001, 0b011, 0b101, 0b110, New CID and New SAID are assigned as follows:

New CID
The New CIDs shall be set as follows: the first CID in the list shall be basic CID; the second CID in the list shall be primary management CID, the third CID in the list shall be Secondary Management CID if secondary management connection is established for the MS at the current serving BS. The remaining CIDs shall be transport CIDs, multicast CIDs are enumerated by the ascending order of corresponding current SFIDs. The MS shall store the CIDs associated with the newly added BS and use the CIDs when the newly added BS becomes the anchor BS.

New SAID
New SAIDs are enumerated by the ascending order of corresponding current SAIDs. The MS shall store the SAIDs associated with the newly added BS and use the SAIDs when the newly added BS becomes the anchor BS.

6.3.2.3.50 MOB_HO-IND (HO indication) message

An MS shall transmit a MOB_HO-IND message for final indication that it is about to perform an HO. When the MS cancels or rejects the HO, the MS shall transmit a MOB_HO-IND message with appropriate HO_IND_type field. If the MS rejects the target BS(s) offered by the Serving BS for handover, the MS may include its preferred target BS(s) in the message sent to the serving BS. The message shall be transmitted on the Basic CID. See Table 153.

Table 153—MOB_HO-IND message format

Syntax	Size (bit)	Notes
MOB_HO-IND_Message_format() {	—	—
Management Message Type = 59	8	—
Reserved	6	*Reserved*; shall be set to zero
Mode	2	0b00: HO 0b01: MDHO/FBSS: Anchor BS update 0b10: MDHO/FBSS: Diversity set update 0b11: *Reserved*
if (Mode == 0b00) {	—	—
HO_IND_type	2	0b00: Serving BS release 0b01: HO cancel 0b10: HO reject 0b11: *Reserved*
Ranging_Params_valid_indication	2	0b00: No indication. BS ignores this field (Default) 0b01: MS ranging parameters for target BS, which is specified in this message are valid 0b10: MS has no valid ranging parameters for target BS, which is specified in this message 0b11: *Reserved*
Reserved	4	Shall be set to zero.
if (HO_IND_type == 0b00) {	—	—
Target_BS_ID	48	Applicable only when HO_IND_type is set to 0b00
Preamble index/ Subchannel Index	8	For the OFDMA PHY, this parameter defines the PHY specific preamble for the target BS. For the OFDM PHY, the 5 LSB contain the active DL subchannel index for the target BS. The 3 MSB shall be *Reserved* and set to ‘0b000’
}	—	—
}	—	—
if (Mode == 0b01) {	—	—
MDHOFBSS_IND_Type	2	0b00: Confirms anchor BS update 0b01: Anchor BS update cancel 0b10: Anchor BS update reject 0b11: *Reserved*
if (MDHOFBSS_IND_Type == 0b00) {	—	—

Table 153—MOB_HO-IND message format *(continued)*

Syntax	Size (bit)	Notes
Anchor BSID	3	TEMP_BSID of the anchor BS.
Action time	8	Action time when the MS shall update the anchor BS by itself.
}	—	—
}	—	—
if (Mode == 0b10) {	—	—
MDHOFBSS_IND_Type	2	0b00: Confirms diversity set update 0b01: Diversity set update cancel 0b10: Diversity set update reject 0b11: *Reserved*
if (MDHOFBSS_IND_Type == 0b00) {	—	—
Diversity Set Included Indicator	1	1: Final decision of diversity set members included in the message. 0: Diversity set members are as specified in MOB_BSHO_RSP message. No diversity set information included in this message.
if (Diversity Set Included Indicator == 1) {	3	—
Anchor BSID	3	TEMP_BSID of the anchor BS.
N_BSs	3	Number of BS in the diversity set, excluding the anchor BS.
for (j = 0; j < N_BSs; j++) {	—	—
Temp BSID	3	Diversity set member ID assigned.
}	—	—
}	—	—
Action time	8	Action time when the MS shall update the Diversity Set by itself.
}	—	—
}	—	—
Padding	*variable*	Padding bits to ensure byte aligned. Shall be set to zero.
TLV encoded information	*variable*	—
}	—	—

The MS shall use the HO mode signaled by the BS in the previous MOB_BSHO-REQ or MOB_BSHO-RSP message to perform HO.

An MS shall generate MOB_HO-IND messages in the format shown in Table 153. The following parameters shall be included in the message:

Ranging Params valid indication

Indicator that shows whether ranging parameters acquired by the MS during preceding Association with selected target BS are still valid. This indicator may be used by target BS in decision to allocate dedicated transmission opportunity by Fast_Ranging_IE.

0b00: No indication. BS ignores this field (Default)
0b01: MS ranging parameters for target BS, which is specified in this message are valid
0b10: MS has no valid ranging parameters for target BS, which is specified in this message
0b11: *Reserved*

Target_BS_ID

Same as the BSID parameter in the DL-MAP message of target BS.

Preamble Index/ Subchannel Index

For the OFDMA PHY this parameter defines the PHY-specific preamble for the target BS. For the OFDM PHY the 5 LSB contain the DL subchannel index (as defined in Table 248) used in the target BS sector. The 3 MSB shall be reserved and set to 0.

The MOB_HO-IND message may include the following parameter encoded as a TLV tuple if HO_IND-type is set to 0b10:

Alternate_Target_BS (see 11.15.2)

If the MS sends the MOB_HO-IND with HO_IND_type set to 0b10 (HO reject), the MS may send this TLV to indicate its preferred handoff target BS.

The MOB_HO-IND message shall include the following parameter encoded as TLV tuples:

HMAC/CMAC Tuple (see 11.1.2)

The HMAC/CMAC Tuple shall be the last attribute in the message.

6.3.2.3.51 MOB_PAG-ADV (BS broadcast paging) message

The MOB_PAG-ADV message shall be sent on the Broadcast CID or Idle Mode Multicast CID during the BS paging interval.

The format of the message is shown in Table 154.

Table 154—MOB_PAG-ADV message format

Syntax	Size (bit)	Notes
MOB_PAG-ADV_Message_format() {	—	—
Management Message Type = 61	8	—
Num_Paging_Group_IDs	8	Number of Paging Group IDs in this message
for (*i* = 0; *i* < Num_Paging_Group_IDs; *i*++) {	—	—
Paging Group ID	16	—
}	—	—
Num_MACs	8	Number of MS MAC addresses

Table 154—MOB_PAG-ADV message format *(continued)*

Syntax	Size (bit)	Notes
For (*j* = 0; *j* < Num_MACs; *j*++) {	—	—
MS MAC Address hash	24	The hash is obtained by computing a CRC24 on the MS 48-bit MAC address. The polynomial for the calculation is 0x1864CFB
Action Code	2	Paging action instruction to MS 0b00 = No action required 0b01 = Perform ranging to establish location and acknowledge message 0b10 = Enter network 0b11 = *Reserved*
Reserved	6	—
}	—	—
Padding	*variable*	Padding bits to ensure octet aligned
TLV Encoded Information	*variable*	TLV-specific
}	—	—

A BS shall generate MOB_PAG-ADV including the following parameters:

Paging Group ID (16 bit)
One or more logical affiliation groupings of BS.

MS MAC Address hash
This is a 24-bit field used to hash the MS 48-bit MAC address. The hash value shall be the remainder of the division (Modulo 2) of the 48-bit MAC address multiplied by the polynomial D24 with the generator polynomial $g(D) = D^{24} + D^{23} + D^{18} + D^{17} + D^{14} + D^{11} + D^{10} + D^{7} + D^{6} + D^{5} + D^{4} + D^{3} + D + 1$ (hex = 1864cfb) (Example: [MS 48-bit MAC address]= 00:D0:59:0F:E2:2E; hash would then be set to 0x51efe3).

Action Code
Paging action instruction to the MS to perform the following action:

0b00 = No action required
0b01 = Perform ranging to establish location and acknowledge message
0b10 = Enter network
0b11 = *Reserved*

For OFDMA PHY, when a BS pages multiple MSs, the BS may assign dedicated CDMA codes to one or more MS being paged. The BS shall first list the MAC Address Hash of those MSs that are assigned dedicated CDMA codes, followed by the MSs that are not assigned dedicated CDMA codes.

For OFDMA PHY, the following TLV may be included in the MOB_PAG-ADV management message:

CDMA code and transmission opportunity assignment (see 11.17.1)
OFDMA-PHY-specific parameter used to indicate CDMA code and transmission opportunity assigned to one or more MSs being paged in this message. One CDMA code and transmission opportunity assignment in the TLV corresponds to one MS paged. The order of the assignments

is the same as the order of appearance of MS MAC address hash except with action code "No Action Required" in this message.

For OFDMA PHY, the following TLV may be included in the MOB_PAG-ADV management message. If a CDMA code assignment TLV is included, the Page-Response window TLV shall be included. There shall be no more than one occurrence of the Page-Response window TLV.

Page-Response window (see 11.17.2)
OFDMA-PHY-specific parameter used to indicate the time window (in unit of frames) during which the MS shall transmit the CDMA code at the transmission opportunity assigned in the CDMA code and transmission opportunity assignment TLV. The start of the window is the next frame after receiving the MOB_PAG-ADV.

6.3.2.3.52 MBS_MAP (multicast and broadcast service map) message

The BS shall send an MBS_MAP message on the Broadcast CID to specify the location and size of multi-BS MBS data bursts which are located in DL permutation zones designated for MBS in frames that are from two to five frames in the future from the frame containing the MBS MAP message. If present, an MBS_MAP message shall be located at the first symbol and the first subchannel in the DL permutation zone for MBS. The MBS_MAP message format is presented in Table 155. This message includes the MBS_DATA_IE, Extended_MBS_DATA_IE, and MBS_DATA_Time_Diversity_IE, which define the access information for the MBS burst. See Table 155, Table 156, Table 157, and Table 158.

Table 155—MBS_MAP message format

Syntax	Size (bit)	Notes
MBS_MAP Message format (){	—	—
Management Message Type = 62	8	62
MBS_DIUC_Change_Count	8	—
#MBS_DATA_IE	4	The number of included MBS DATA IEs
for (i = 0; i < n; i++){	—	n = #MBS DATA IEs
MBS_DATA_IE	*variable*	—
}	—	—
#Extended_MBS_DATA_IE	4	The number of included Extended MBS DATA IEs
for(i = 0; i < k; i++) {	—	k = #Extended MBS DATA IEs
Extended_MBS_DATA_IE()	*variable*	—
}		—
#MBS_DATA_Time_Diversity_IE	4	The number of included MBS DATA Time Diversity IEs
for(i = 0; i < m; i++){	—	m = #MBS DATA Time Diversity IEs
MBS_DATA_Time_Diversity_IE()	*variable*	—
}	—	—
if(!byte boundary){	—	—

Table 155—MBS_MAP message format *(continued)*

Padding Nibble	4	—
}	—	—
TLV encoding element	—	—
}	—	—

MBS DIUC Change Count

It is used to notify the Burst Profile used for multi-BS MBS data has been changed. If MBS_DIUC_Change_Count change, MS should wait until receiving DCD message unless Downlink Burst Profile TLV is included in MBS_MAP message.

The following TLV may be included in MBS_MAP message:

Downlink Burst Profile

Downlink Burst Profile is used for the definition of MBS DIUC. The MBS DIUC overrides the DIUC in DCD message for the MBS portion of the frame. If MBS DIUC is not defined by MBS MAP message, DIUC in DCD message shall be used instead. See Table 156, Table 157, and Table 158.

MCID_Preallocation and Transmission Info (see 11.1.12.1)

MCID_Preallocation and Transmission Info is used by the BSs in one MBS-Zone to provide information about changes in mapping of current MCIDs in the selected other MBS Zones.

MCID-Continuity and Transmission Info (see 11.1.12.2)

MCID-Continuity and Transmission Info is used by the BSs in one MBS-Zone to show consistency of MCID's mapping used in selected other MBS Zones. Both procedures of MCID update do not make any assumptions on the way the MCIDs were allocated.

Table 156—MBS_MAP types

MBS_MAP type	Description
0	MBS_DATA_IE
1	MBS_DATA_Time_Diversity_IE
2	Extended_MBS_DATA_IE
3	*Reserved*

Table 157—MBS DATA IE format

Syntax	Size (bit)	Notes
MBS_DATA_IE() {	—	—
MBS_MAP Type = 0	2	MBS_DATA_IE
MBS Burst Frame Offset	2	This indicates the burst located by this IE will be shown after MBS Burst Frame Offset + 2 frames.
Next MBS MAP change indication	1	This indicates whether the size of MBS MAP message of next MBS frame for these Multicast CIDs included this IE will be different from the size of this MBS MAP message.
No. of Multicast CID	3	—
for(i = 0; i < No. of Multicast CID; i++){	—	—
Multicast CID	12	12 LSBs of CID for multicast.
}	—	—
MBS DIUC	4	—
OFDMA Symbol Offset	8	OFDMA symbol offset with respect to start of next (MBS Burst Frame offset + 2)th frame.
Subchannel Offset	6	OFDMA subchannel offset with respect to start of the next (MBS Burst Frame offset +2)th frame.
Boosting	3	Refer to Table 321.
No. OFDMA Symbols	7	The size of MBS data.
No. Subchannels	6	—
Repetition Coding Indication	2	0b00–No repetition coding 0b01–Repetition coding of 2 used 0b10–Repetition coding of 4 used 0b11–Repetition coding of 6 used
Next MBS Frame Offset	8	A relative value from the current frame number in which the next MBS MAP message will be transmitted.
Next MBS OFDMA Symbol Offset	8	The offset of the OFDMA symbol in which the next MBS portion starts, measured in OFDMA symbols from the beginning of the DL frame in which the MBS_MAP is transmitted.
if (Next MBS MAP change indication == 1){	—	—
Next MBS No. OFDMA Symbols	6	It is to indicate the size of MBS_MAP message in Next MBS portion where the BS shall transmit the next MBS frame for multicast CIDs in this IE.
Next MBS No. OFDMA Subchannels	6	It is to indicate the size of MBS_MAP message in Next MBS portion where the BS shall transmit the next MBS frame for multicast CIDs in this IE.
}	—	—
}	—	—

Table 158—Extended MBS DATA IE format

Syntax	Size (bit)	Notes
Extended_MBS_DATA_IE(){	—	—
MBS MAP Type = 2	2	Extended_MBS_DATA_IE
MBS_Burst_Frame_Offset	2	This indicates the burst indicated by this IE will be shown after MBS Burst Frame offset + 2 frames.
Next MBS MAP change indication	1	This indicates whether the size of MBS MAP message of next MBS frame for these multicast CIDs included this IE will be different from the size of this MBS MAP message.
No. of Multicast CID	3	—
for(*i* = 0; *i* < No. of Multicast CIDs; *i*++) {	—	—
Multicast CID	12	12 LSBs of CID for multicast.
No. of Logical Channel ID	4	—
for(*j* = 0; *j* < No. of Logical Channel ID; *j*++) {	—	—
Logical Channel ID	8	—
}	—	—
}	—	—
MBS DIUC	4	—
OFDMA Symbol Offset	8	OFDMA symbol offset with respect to start of the next (MBS_Burst_Frame_offset + 2)-th frame.
Subchannel Offset	6	OFDMA subchannel offset with respect to start of the next (MBS_Burst_Frame_offset + 2)-th frame.
Boosting	3	—
No. OFDMA Symbols	7	The size of MBS data.
No. Subchannels	6	—
Repetition Coding Indication	2	0b00 = No repetition coding 0b01 = Repetition coding of 2 used 0b10 = Repetition coding of 4 used 0b11 = Repetition coding of 6 used
Next MBS Frame Offset	8	A relative value from the current frame number in which the next MBS MAP message will be transmitted.
Next MBS OFDMA Symbol Offset	8	The offset of the OFDMA symbol in which the next MBS portion starts, measured in OFDMA symbols from the beginning of the DL frame in which the MBS_MAP is transmitted.
If (Next MBS MAP change indication = 1){	—	—

Table 158—Extended MBS DATA IE format *(continued)*

Syntax	Size (bit)	Notes
Next MBS No. OFDMA Symbols	6	It is to indicate the size of MBS_MAP message in Next MBS portion where the BS shall transmit the next MBS frame for multicast CIDs in this IE.
Next MBS No. OFDMA Subchannels	6	It is to indicate the size of MBS_MAP message in Next MBS portion where the BS shall transmit the next MBS frame for multicast CIDs in this IE.
}	—	—
}	—	—

Multicast CID

CID that is used for MBS connections.

Logical Channel ID

This field is used to distinguish logical MBS connections which belong to the same multicast CID. It is allocated to each logical MBS connection (i.e., MBS contents) in DSA-RSP message during dynamic service addition procedure as described in 11.13.35. See Table 159.

Table 159—MBS DATA Time Diversity IE format

Syntax	Size (bit)	Notes
MBS_DATA_Time_Diversity_IE() {	—	—
MBS_MAP Type = 1	2	See Table 156.
MBS Burst Frame Offset	2	This indicates the burst located by this IE will be shown after MBS Burst Frame offset + 2 frames.
OFDMA symbol offset	8	This indicates starting position of the region of MBS bursts with respect to start of the next (MBS Burst Frame offset + 2)-th frame.
# of Data Subbursts	4	n = # of Data Subbursts with the same frame offset.
for(i = 0; i < n; i++){	—	—
Multicast MCID change indication	1	Indicates if the MCID for this subburst is different from the MCID for subburst in the preceding iteration of this for-loop. The first instance of this field within this IE shall be set to 1.
if (Multicast MCID change indication == 1){	—	—
Multicast CID	12	12 LSBs of CID for multicast.

Table 159—MBS DATA Time Diversity IE format *(continued)*

Syntax	Size (bit)	Notes
}	—	—
***N_{EP}, N_{SCH}* change indication**	1	Indicates if the N_{EP} or N_{SCH} for this subburst is different from the N_{EP} or N_{SCH} in the preceding iteration of this for-loop. The first instance of this field within this IE shall be set to 1.
if(N_{EP}, N_{SCH} change indication == 1){	—	—
N_{EP}	4	See Table 509.
N_{SCH}	4	See Table 509.
}	—	—
AI_SN	1	—
SPID	2	—
ACID	4	—
Next MBS MAP change indication	1	This indicates whether the size of MBS MAP message of the next MBS frame for this multicast CID will be different from the size of this MBS MAP message.
Next MBS offset change indication	1	Indicates whether the Next MBS frame offset or Next MBS Symbol offset are different from the offsets in the preceding iteration of this for-loop. The first instance of this field within this IE shall be set to 1.
if (Next MBS offset change indication == 1){	—	—
Next MBS frame offset	8	—
Next MBS OFDMA Symbol offset	8	—
}	—	—
if (Multicast MCID change indication & Next MBS MAP change indication == 1) {	—	—
Next MBS No. OFDMA symbols	6	It indicates the size of MBS_MAP message in Next MBS portion where the BS shall transmit the next MBS frame for multicast CIDs in this IE.
Next MBS No. OFDMA subchannels	6	It indicates the size of MBS_MAP message in Next MBS portion where the BS shall transmit the next MBS frame for multicast CIDs in this IE.
}	—	—
Reserved	**1**	—
}	—	—
}	—	—

OFDMA symbol offset

This indicates the starting position of the region for HARQ-coded MBS Bursts allocated with the same MBS_Burst_Frame_offset. The region begins from the first subchannel of the OFDM symbol and in this region, MBS bursts, indicated by MBS DATA Time Diversity IE at the same MBS_MAP message, are allocated in a frequency-first, one-dimensional way in the order of MBS DATA Time Diversity IE at a MBS_MAP message.

# of Data Subbursts

This indicates the number of Data Subbursts with the same MBS Burst Frame Offset that are specified in this MBS MAP message.

N_{EP} code, N_{SCH} code

The combination of N_{EP} code and N_{SCH} code indicates the number of allocated slots and scheme of coding and modulation for the DL burst.

AI_SN

Defines HARQ identifier sequence number. This is toggled between 0 and 1 on successfully transmitting each encoder packet with the same HARQ channel.

SPID

Defines subpacket identifier, which is used to identify the four subpackets generated from an encoder packet.

ACID

Defines HARQ channel identifier for TimeDiversity MBS packet. Each TimeDiversity MBS connection can have multiple HARQ channels, each of which may have an encoder packet transaction pending.

MBS DATA Time Diversity IE presents when MBS only for HARQ-enabled MS is provided.

The MBS burst indicated by the MBS DATA Time Diversity IE is encoded at the same way of HARQ, but it does not need the acknowledgement from MS.

6.3.2.3.53 PMC_REQ (power control mode change request) message

This subclause is applicable to the OFDM and OFDMA PHY modes. The decision of the change of the power control mode between the open-loop power control and closed-loop power control is done at BS and the decision is indicated by the PMC_RSP MAC message. Before the frame start specified in PMC_RSP, the MS shall transmit PMC_REQ in response to receipt of a PMC_RSP from the BS directing a change to UL power control mode. Further, PMC_REQ can be used to request to change the power control mode. On the receipt of the PMC_REQ (Confirmation = 0) from MS, BS may send PMC_RSP in T47. The closed- and open-loop power control schemes are described in 8.3.7.4 (for OFDM) and 8.4.10.3 (for OFDMA). Before the first PMC_RSP message from BS, the default power control mode shall be the closed power control scheme. See Table 160.

Table 160—PMC_REQ message format

Syntax	Size (bit)	Notes
PMC_REQ message format{	—	—
Management Message Type = 63	8	Type = 63
Power control mode change	2	0b00: Closed-loop power control mode 0b01: Open loop power control passive mode with Offset_SS_{perSS} retention. 0b10: Open-loop power control passive mode with Offset_SS_{perSS} reset 0b11: Open-loop power control active mode
UL Tx power	8	UL Tx power level for the burst that carries this header (11.1.1). When the Tx power is different from slot to slot, the maximum value is reported.
Confirmation	1	0: Request 1: Confirmation
Reserved	5	Shall be set to zero
}	—	—

CID shall be the Basic CID of MS. MS shall generate the PMC_REQ message including the following parameters:

Power control mode change

0b00: Closed-loop power control mode.
0b01: Open-loop power control passive mode with Offset_SS_{perSS} retention.
0b10: Open loop power control passive mode with Offset_SS_{perSS} reset.
0b11: Open loop power control active mode.

UL Tx power

UL Tx power level for the burst that carries this header (11.1.1). When the Tx power is different from slot to slot, the maximum value is reported.

Confirmation

0: MS requests to change the power control mode.
1: MS confirms the receipt of PMC_RSP from BS.

6.3.2.3.54 PMC_RSP (power control mode change response) message

For OFDM and OFDMA PHY modes, PMC_RSP is sent from BS as a confirmation of MS's UL power control change intention with PMC_REQ message or it is sent unsolicited manner to command MS to change the UL power control mode as indicated in the PMC_RSP. The MS should switch to the new power control mode as instructed by the BS through PMC_RSP. The BS may resend PMC_RSP to the MS if the BS fails to receive PMC_REQ (Confirmation = 1) from the MS. When the open-loop power control is indicated, Offset_BS_{perMS} is included. When the closed-loop power control is indicated, power adjust can be signaled. Before the first PMC_RSP message from BS, the default power control mode shall be the closed power control scheme (see Table 161).

Table 161—PMC_RSP message format

Syntax	Size (bit)	Notes
PMC_RSP message format {	—	—
Management Message Type = 64	8	Type = 64
Power control mode change	2	0b00: Closed-loop power control mode 0b01: Open loop power control passive mode with Offset_SS_{perSS} retention 0b10: Open-loop power control passive mode with Offset_SS_{perSS} reset 0b11: Open-loop power control active mode
Start frame	6	6 LSBs of frame number when the indicated power control mode is activated. When it is the same as the current frame number, the mode change shall be applied from the current frame.
If (Power control mode change == 0b00) {	—	—
Power adjust	8	Signed integer, which expresses the change in power level (in multiples of 0.25 dB) that the MS shall apply to its current transmission power. When subchannelization is employed, the subscriber shall interpret the power offset adjustment as a required change to the transmitted power density.
} else {	—	—
Offset_BS_{perMS}	8	Signed integer, which expresses the change in power level (in multiples of 0.25 dB) that the MS shall apply to the open-loop power control formula in 8.4.10.3.2.
}	—	—
}	—	—

CID shall be the Basic CID of MS. MS shall generate the PMC_RSP message including the following parameters:

Power control mode change

0b00: Closed-loop power control mode
0b01: Open loop power control passive mode with Offset_SS_{perSS} retention
0b10: Open-loop power control passive mode with Offset_SS_{perSS} reset
0b11: Open-loop power control active mode

Start frame

6 LSBs of frame number when the indicated power control mode is activated. When it is the same as the current frame number, the mode change shall be applied from the current frame.

Power adjust

Signed integer, which expresses the change in power level (in multiples of 0.25 dB) that the MS shall apply to its current transmission power. When subchannelization is employed, the

subscriber shall interpret the power offset adjustment as a required change to the transmitted power density.

Offset_BS$_{perMS}$
Signed integer, which expresses the change in power level (in multiples of 0.25 dB) that the MS shall apply to the open-loop power control formula in 8.4.10.3.2.

6.3.2.3.55 OFDMA SUB-DL-UL-MAP message

The placement of SUB-DL-UL-MAP messages within a frame is shown in Figure 39.

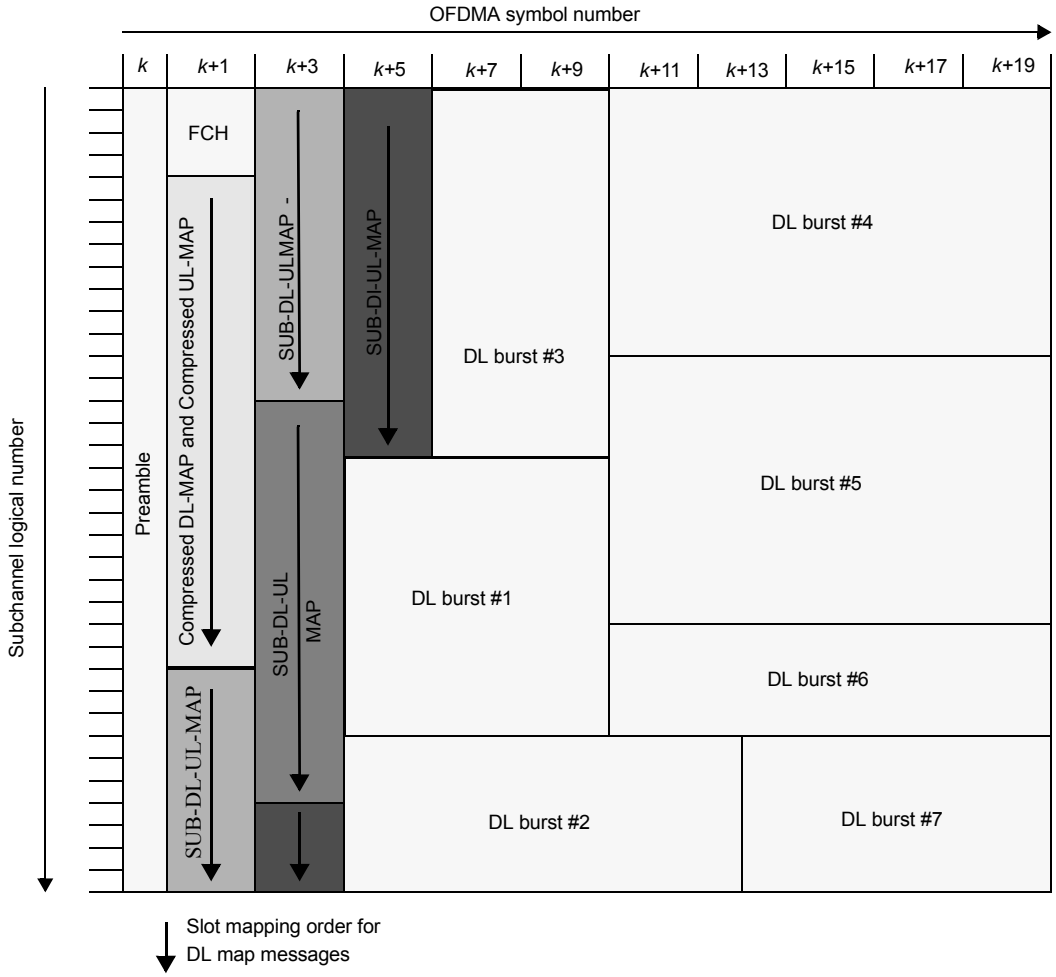

Figure 39—Submap burst

This message shall only apply to OFDMA PHY.

The SUB-DL-UL-MAP message shall appear in a compressed form, in which the generic MAC header is omitted. This is indicated by setting the 3 MSBs of the first data byte in the PHY burst pointed by a SUB MAP pointer IE to 1 (an invalid combination for a generic MAC header). The burst containing the SUB-DL-UL MAP message shall not contain any other messages.

The SUB-DL-UL-MAP format is presented in Table 162.

Table 162—SUB-DL-UL-MAP message format

Syntax	Size (bit)	Notes
SUB-DL-UL-MAP() {	—	—
SUB-DL-UL-MAP map indicator	3	Set to 0b111
Map message length	10	The length is limited to 991 bytes at most
RCID_Type	2	0b00 = Normal CID 0b01 = RCID11 0b10 = RCID7 0b11 = RCID3
HARQ ACK offset indicator	1	—
If (HARQ ACK offset indicator == 1){	—	—
DL HARQ ACK offset	8	—
UL HARQ ACK offset	8	—
}	—	—
DL IE Count	8	—
For (*i* = 1; *i* <= DL IE Count; *i*++){	—	—
DL-MAP_IE()	*variable*	—
}	—	—
OFDMA Symbol offset	8	This value indicates start symbol offset of subsequent subbursts in this UL Allocation Start IE
Subchannel offset	7	This value indicates start subchannel offset of subsequent subbursts in this UL Allocation Start IE
ACK region index	1	Index of the ACK region associated bursts defined in this sub-map
while (map data remains){	—	—
UL-MAP_IE()	*variable*	—
}	—	—
If (!byte boundary){	—	—
Padding Nibble	*variable*	Padding to reach byte boundary
}	—	—
}	—	—

Map message length

The length of the submap message in bytes including the SUB-DL-UL-MAP indicator and the CRC. To avoid ambiguity with the stuff byte (0xFF), the length is limited to 991 bytes.

HARQ ACK offset indicator

A field that indicates the inclusion of HARQ offsets. If this field is 0, then the ACK offsets shall be follow the last allocation made by previous maps. An MS that failed to decode any of the previous maps shall disregard all HARQ allocations made by this map, if HARQ ACK offset indicator is 0.

DL HARQ ACK offset

Indicates the ACK channel in the ACKCH Region that corresponds to the first HARQ-enabled DL burst specified in this map message. If more than one ACK region is defined, the DL HARQ ACK offset applies to the ACK region indexed by ACK region index.

ACK region index

The index of the ACK region associated with all DL HARQ bursts defined in this sub-map (FDD/H-FDD only).

0—First ACK region
1—Second ACK region.

For TDD mode this bit shall be set to 0. The ACK offset applies to this ACK region only, and all the H-ARQ bursts defined in the sub map should have a matching ACK region index defined in the HARQ DL MAP IE (see 8.4.5.3.21).

UL HARQ ACK offset

Indicates the ACK bit index in the DL HARQ ACK IE that corresponds to the first HARQ-enabled UL burst specified in this map message.

RCID_TYPE

The RCID type used for RCID IEs specified in DL-MAP IEs that are described in this SUB-DL-UL-MAP.

DL IE Count

The number of DL-MAP IEs.

A CCITT CRC 16 value is appended to the end of the SUB-DL-UL-MAP message. The CRC is computed across all bytes of the SUB-DL-UL-MAP message.

SUB-DL-UL-MAP message shall be pointed only through compressed DL MAP.

The order of DL-MAP IEs in the SUB-DL-UL-MAP message shall conform to the order defined for the DL-MAP message in 6.3.2.3.2.

The logical order in which MAC PDUs are mapped to the PHY bursts in the DL is defined as the order of increasing start time of all PHY bursts in the frame regardless of the MAP message in which they are described. If two or more PHY bursts have the same start time, the logical order is determined according to the order of appearance in the concatenation of DL-MAP and all SUB-DL-UL-MAP messages.

The logical order in which MAC PDUs are mapped to the PHY bursts in the UL is defined as the order of UL-MAP IEs in the SUB-DL-UL-MAP message.

The SUB-DL-UL-MAP message can be located in the first zone of the frame or when supported by the relevant MSs, in any of the zones within the frame. The sub-map capability for the first zone or other zones are specified and negotiated using SBC-REQ/RSP messages. In each zone, the SUB-DL-UL-MAP messages shall be allocated consecutively using the same uni-dimensional frequency-first slot mapping order used for the DL-MAP and HARQ MAP bursts. For the first zone in the frame, the first burst containing a

SUB-DL-UL-MAP message shall be allocated immediately following the bursts containing HARQ MAP messages, or following the compressed DL-MAP and appended compressed UL-MAP if no HARQ MAPs exist in the frame. For all subsequent zones, the first burst containing a SUB-DL-UL-MAP message shall be allocated starting at the first subchannel of the first OFDMA symbol in the zone. DL-MAP_IEs that appear in an SUB-DL-UL-MAP message shall only describe allocations whose starting OFDMA symbol is equal to or later than the first OFDMA symbol of the zone in which the SUB-DL-UL-MAP message is located. The bursts containing the SUB-DL-UL-MAP messages shall only be described by a SUB-MAP Pointer IE. This IE (if exists) shall immediately follow a STC_Zone_IE to describe SUB-DL-UL-MAP messages that are located in that zone. If SUB-DL-UL-MAP messages are located in the first zone, this IE shall immediately follow the DL IE count of compressed MAP.

The INC_CID flag shall be reset to 0 in the beginning of each SUB-DL-UL-MAP message.

Each SUB-DL-UL-MAP terminates the effect of any previous DL physical modifier, i.e., each SUB-DL-UL-MAP starts with no physical modifier. The first UL-MAP-IE in each SUB-DL-UL-MAP terminates the effect of any previous UL physical modifier.

All DL and UL Zone Switch IEs (Extended DIUC 0x01, Extended UIUC 0x04) shall be defined in the main DL and UL MAPs. SUB-DL-UL-MAP shall comply with the main DL and UL MAP zone switch. The SUB-DL-UL-MAP shall not include the DL Zone Switch IE. Instead, the zone shall be identified by the symbol number (indicated in DL-MAP IE and other IEs defining allocations).

The zone in which an UL allocation occurs is identified by the OFDMA Symbol Offset field in the SUB-DL-UL-MAP or the UL Allocation Start IE (see 8.4.5.4.13). Allocations within a non-AAS zone shall start at the subchannel/symbol offset defined by the SUB-DL-UL-MAP or UL Allocation Start IE. Allocations made in an UL AAS zone or UL AMC zone shall be defined by the slot offset field of the UL-MAP IE referenced to the start of the AAS zone or UL AMC zone. In this case, the subchannel/symbol offset is only used to specify that the allocation occurs in the AAS zone or UL AMC zone and is not used as a starting point for the UL allocation.

The DL-MAP IEs in the SUB-DL-UL-MAP shall be ordered in the increasing order of the transmission start time of the relevant PHY burst/allocation. The UL allocations in the SUB-DL-UL-MAP shall be ordered in increasing order of zones.

The maximum number of SUB-DL-UL-MAP messages per frame is three.

SUB-DL-UL-MAP message shall be used only with compressed DL and appended UL MAP structure.

6.3.2.3.56 MIMO precoding setup/tear-down messages

The BS can setup long-term precoding with feedback from a particular MS by sending the MAC management message PRC-LT-CTRL to the MS. The BS can also use the same MAC management message to tear-down the long-term precoding with feedback.

The precoding feedback delay of the BS, in number of frames, should be signaled from the BS to the MS in the PRC-LT-CTRL MAC management message. See Table 163.

Table 163—Setup/Tear-down of long-term MIMO precoding (PRC-LT-CTRL) message format

Syntax	Size (bit)	Notes
PRC-LT-CTRLformat(){	—	—
Management Message Type = 65	8	—
Setup/Tear-down long-term precoding with feedback	1	0 = Turn off 1 = Turn on
BS precoding application delay	2	*k*, delay in number of frames beyond the minimal delay of 1 frame for when precoding information fed back from the MS to the BS can or will be applied.
}	—	—

6.3.2.3.57 MIH Payload Transfer (MOB_MIH-MSG) message

This message shall be transmitted on the Primary Management connection.

Table 164—MOB_MIH-MSG message format

Syntax	Size	Notes
MOB_MIH-MSG_Message_Format( ) {	—	—
Management Message Type = 67	8 bits	—
TLV Encoded Information	*variable*	TLV Specific
}	—	—

The MOB_MIH-MSG shall include the following parameters as encoded as TLV tuples:

MIHF Frame (see 11.1.11)
HMAC/CMAC Tuple (see 11.1.2)
The HMAC/CMAC Tuple shall the be last attribute in the message.

The following parameters may be included in the MOB_MIH-MSG message:

MIHF frame type (see 11.1.11.2)
The MIHF frame type TLV indicates the service type of the MIHF frame TLV.

6.3.2.3.58 Service Identity Information (SII-ADV) message

A BS may use the SII-ADV message to broadcast a list of Network Service Provider (NSP) Identifiers. The message may be broadcast periodically without solicitation. The SII-ADV message may also be sent in response to a SS requesting NSP information (see 6.3.2.3.23). This message is sent from the BS to all SSs on the fragmentable broadcast CID. Assignment method, administration, and usage of NSP IDs are outside the scope of this standard. The list of NSP IDs to be included in this message and the message transmission

frequency are programmable. The BS may use the SII-ADV message to deliver IEEE 802.21 MIHF frame, which carries query response.

Table 165—Service Identity Information (SII-ADV) message format

Syntax	Size	Notes
SII-ADV () {	—	—
Management message type = 68	8 bits	—
TLV Encoded Information	Variable	TLV specific
}	—	—

The following parameters may be included in the SII-ADV message; at least one TLV shall be included in an SII-ADV message:

NSP List TLV (see 11.1.10.1)
The NSP LIST TLV is a TLV that contains one or more Network Service Provider 24 bit Identifiers.

Verbose NSP Name List (see 11.1.10.2)
List of the verbose names of the NSPs. Verbose NSP Name List shall only be included in the message if NSP List TLV is also included in the message.

Query ID (see 11.1.11.3)
The Query ID TLV is used to correlate the response encapsulated in the MIHF frame carried in the MIHF frame TLV with a query previously sent by an MS within the broadcast area of the BS. It may be ignored by all other MSs.

MIHF frame type (see 11.1.11.2)
The MIHF frame type TLV indicates the service type of the MIHF frame TLV.

MIHF frame (see 11.1.11.1)
The encapsulated MIH response.

6.3.2.3.59 Location Based Services (LBS-ADV) message

A BS may use the LBS-ADV message to broadcast the LBS information. The message may be broadcast periodically without solicitation. This message is sent from the BS to all MSs on a broadcast CID (see Table 166).

Table 166—Location-Based Services (LBS-ADV) message format

Syntax	Size (bits)	Notes
LBS-ADV_Message_Format( ) {	—	—
Management message type = 69	—	—
Length	8	Length of information pertaining to the transmitting BS
TLV encoded information	*variable*	—

Table 166—Location-Based Services (LBS-ADV) message format *(continued)*

Syntax	Size (bits)	Notes
Number_of_BS	8	Number of neighbor BSs included in this message that are identified using the BSID.
for (*j* = 0 ; *j* < Number_of_BS ; *j*++) {	—	—
Length	8	Length of message information within the iteration of Number_of_BS_Index in bytes.
BSID	24	The least significant 24 bits of the Base Station ID parameter in the DL-MAP message of the Serving BS or Neighbor BS.
TLV encoded information	*variable*	TLV specific.
}	—	—
Number_of_BS_Index	8	Number of neighbor BSs included in this message that are identified using an index to their position in the MOB_NBR-ADV message.
if(Number_of_BS_Index != 0){	—	—
Configuration change count for MOB_NBR-ADV	8	—
}	—	—
for(*j* = 0; *j* < Number_of_BS_Index; *j*++){	—	—
Length	8	Length of message information within the iteration of Number_of_BS_Index in bytes.
Neighbor_BS_Index	8	Index that corresponds to the position of the BS in the MOB_NBR-ADV message.
TLV encoded information	*variable*	—
}	—	—
}	—	—

The LBS-ADV message may include the following TLV:

Absolute Position (Long Format) TLV (see 11.21.1)
The transmitting BS's coordinates. This TLV shall only be used for the transmitting BS and if the Absolute Position (Short Format) TLV is not used.

Absolute Position (Short Format) TLV (see 11.21.2)
The transmitting BS's coordinates. This TLV shall only be used for the transmitting BS and if the Absolute Position (Long Format) TLV is not used.

Relative Position TLV (see 11.21.3)
A Neighbor BS's coordinates. When this TLV is included it provides the position of a neighbor BS relatively to the transmitting BS.

GPS Time TLV (see 11.21.4)
Information about GPS time and time accuracy.

Frequency Accuracy TLV (see 11.21.5)
Information about the frequency accuracy. This TLV should only be included once in the message

6.3.3 Construction and transmission of MAC PDUs

The construction of a MAC PDU is illustrated in Figure 40.

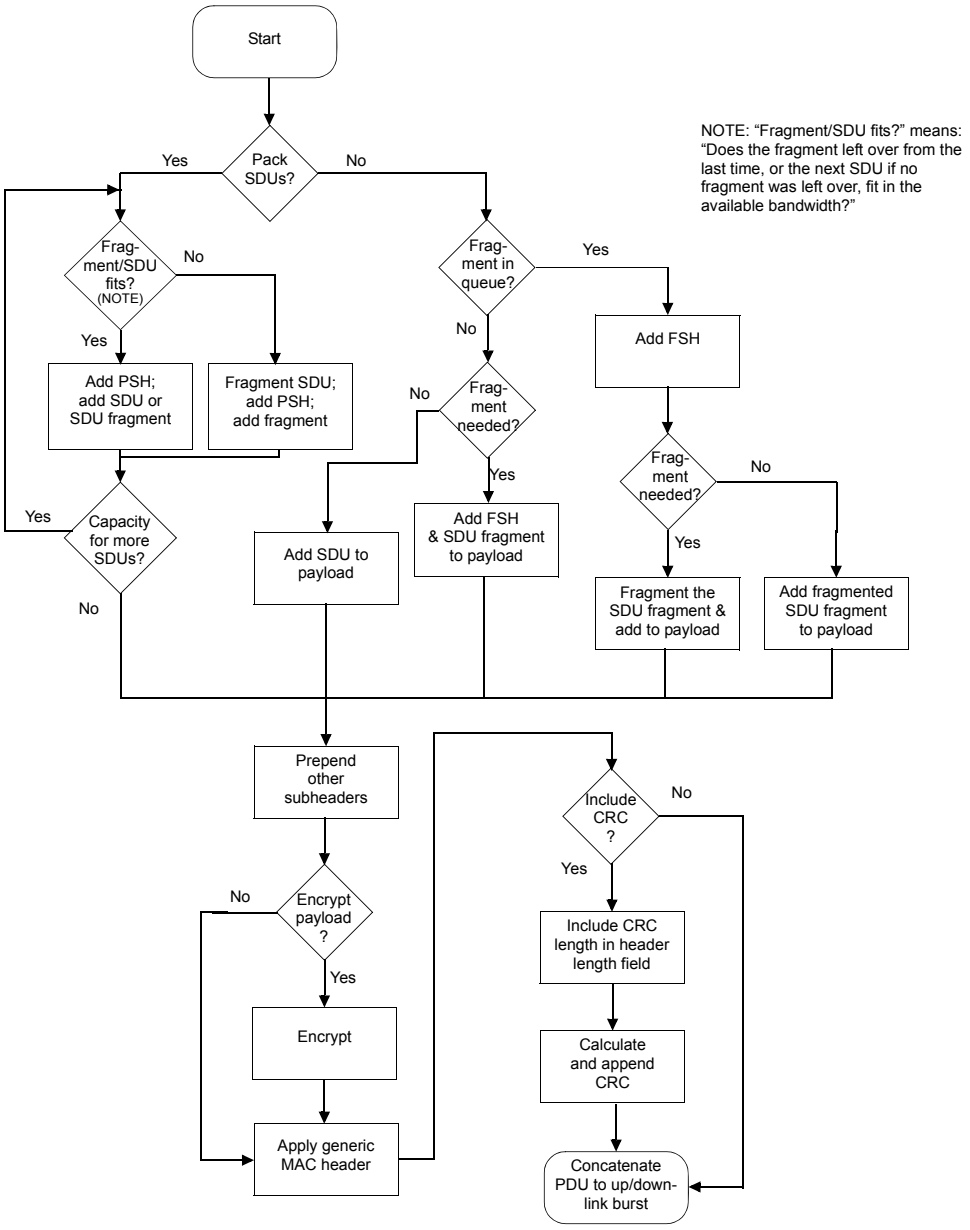

Figure 40—Construction of a MAC PDU

6.3.3.1 Conventions

Data shall be transmitted in accordance with the following rules:

a) Fields of MAC messages and TLV encodings are transmitted in the same order as they appear in the corresponding tables in this standard.
b) Fields of MAC messages and fields of TLV encodings, which are specified in this standard as binary numbers (including CRC and HCS), are transmitted as a sequence of their binary digits, starting from MSB. Bit masks (for example, in ARQ) are considered numerical fields. TLV encodings are transmitted in the order of Type, Length and Value. If the Value of a TLV or a field within the TLVs Value is explicitly specified as a numbered sequence of bits, then the order of transmission shall be from highest sequence number to lowest sequence number. For signed numbers MSB is allocated for the sign. Length field in the "definite form" of ITU-T X.690 is also considered a numerical field.
c) Fields specified as SDUs or SDU fragments (for example, MAC PDU payloads) are transmitted in the same order of bytes as received from upper layers.
d) Fields specified as strings are transmitted in the order of symbols in the string.

In cases c) and d), bits within a byte are transmitted in the order "MSB first."

6.3.3.2 Concatenation

Multiple MAC PDUs may be concatenated into a single transmission in either the UL or DL directions. Figure 41 illustrates this concept for an UL burst transmission. Since each MAC PDU is identified by a unique CID, the receiving MAC entity is able to present the MAC SDU (after reassembling the MAC SDU from one or more received MAC PDUs) to the correct instance of the MAC SAP. MAC management messages, user data, and BR MAC PDUs may be concatenated into the same transmission.

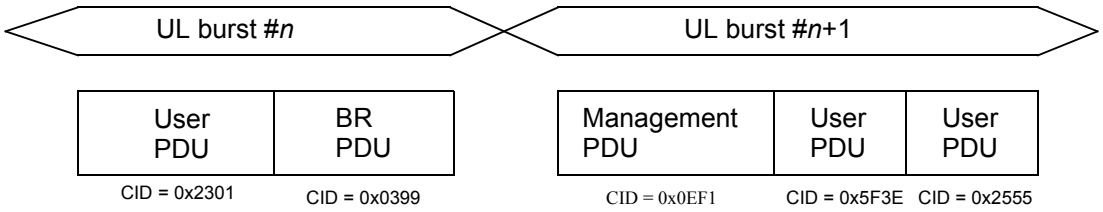

Figure 41— MAC PDU concatenation showing example CIDs

6.3.3.3 Fragmentation

Fragmentation is the process by which a MAC SDU (or MAC management message) is divided into one or more MAC PDUs. This process is undertaken to allow efficient use of available bandwidth relative to the QoS requirements of a connection's service flow. Capabilities of fragmentation and reassembly are mandatory.

The authority to fragment traffic on a connection is defined when the connection is created by the MAC SAP. Fragmentation may be initiated by a BS for DL connections and by an SS for UL connections.

The size of the FSN field in FSHs is fixed per connection. The fragmentable broadcast connection shall use 11-bit FSN. The BS and SS shall support 11-bit FSN. The BS and SS may support 3-bit FSN. All management connections shall use 11-bit FSN. The size of the FSN used on non-ARQ fragmentable transport connections is determined during connection setup (see 11.13.21).

Fragments are tagged with their position in their parent SDU in accordance with Table 167.

Table 167—Fragmentation rules

Fragment	Fragmentation control (FC)
First Fragment	10
Continuing Fragment	11
Last Fragment	01
Unfragmented	00

6.3.3.3.1 Non-ARQ connections

For non-ARQ connections, fragments are transmitted once and in sequence. The sequence number assigned to each fragment allows the receiver to recreate the original payload and to detect the loss of any intermediate fragments. A connection may be in only one fragmentation state at any given time.

Upon loss, the receiver shall discard all MAC PDUs on the connection until a new first fragment is detected or a nonfragmented MAC PDU is detected.

6.3.3.3.2 ARQ-enabled connections

For ARQ-enabled connections, fragments are formed for each transmission by concatenating sets of ARQ blocks with adjacent sequence numbers (see 6.3.4.2). The BSN value carried in the FSH is the BSN for the first ARQ block appearing in the segment.

6.3.3.4 Packing

If packing is turned on for a connection, the MAC may pack multiple MAC SDUs into a single MAC PDU. Packing makes use of the connection attribute indicating whether the connection carries fixed-length or variable-length packets. The transmitting side has full discretion whether to pack a group of MAC SDUs in a single MAC PDU. The capability of unpacking is mandatory.

The construction of PDUs varies for ARQ and non-ARQ connections with respect to packing and fragmentation syntax. The packing and fragmentation mechanisms for both the ARQ and non-ARQ connections are specified in 6.3.3.4.1 through 6.3.3.4.3.

6.3.3.4.1 Packing for non-ARQ connections

6.3.3.4.1.1 Packing fixed-length MAC SDUs

For connections that do not use ARQ and are indicated by the fixed-length versus variable-length SDU indicator (11.13.14), to carry fixed-length MAC SDUs, the packing procedure described in this subclause may be used. For all other non-ARQ connections, the variable-length packing algorithm described in 6.3.3.4.1.2 shall be used.

For packing with fixed-length blocks, the Request/Transmission Policy (11.13.11) shall be set to allow packing and prohibit fragmentation, and the SDU size (11.13.15) shall be included in DSA-REQ message when establishing the connection. The length field of the MAC header implicitly indicates the number of MAC SDUs packed into a single MAC PDU. If the MAC SDU size is n bytes, the receiving side can unpack

simply by knowing that the length field in the MAC header will be $n \times k + j$, where k is the number of MAC SDUs packed into the MAC PDU and j is the size of the MAC header and any prepended MAC subheaders. A MAC PDU containing a packed sequence of fixed-length MAC SDUs would be constructed as in Figure 42. Note that there is no added overhead due to packing in the fixed-length MAC SDU case, and a single MAC SDU is simply a packed sequence of length *1*.

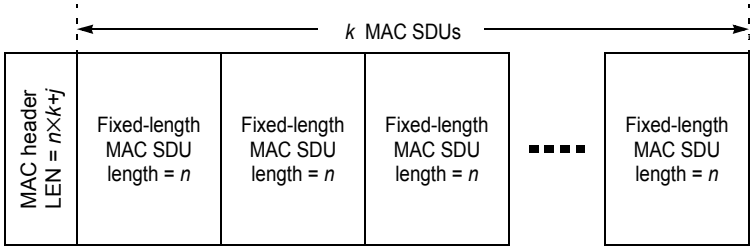

Figure 42—Packing fixed-length MAC SDUs into a single MAC PDU

6.3.3.4.1.2 Packing variable-length MAC SDUs

When packing variable-length SDU connections, such as IEEE 802.3/Ethernet, the $n \times k + j$ relationship between the MAC header's Length field and the higher layer MAC SDUs no longer holds. This necessitates indication of where one MAC SDU ends and another begins. In the variable-length MAC SDU case, the MAC attaches a PSH to each MAC SDU. This subheader is described in 6.3.2.2.3.

A MAC PDU containing a packed sequence of variable-length MAC SDUs is constructed as shown in Figure 43 where PSH_LEN is the length of the packing subheader. If more than one MAC SDU is packed into the MAC PDU, the Type field in the MAC header indicates the presence of PSHs. Note that unfragmented MAC SDUs and MAC SDU fragments may both be present in the same MAC PDU (see Figure 44).

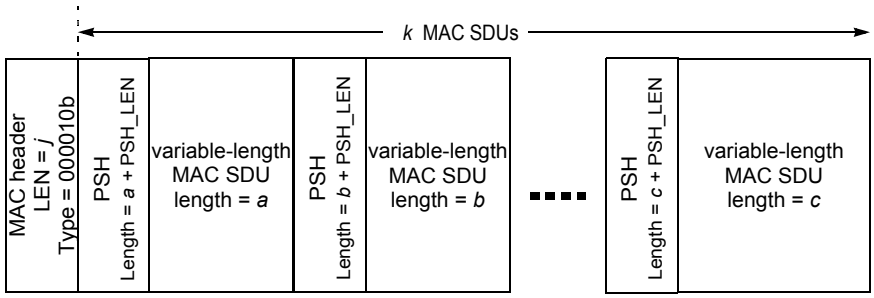

Figure 43—Packing variable-length MAC SDUs into a single MAC PDU

Simultaneous fragmentation and packing allows efficient use of the airlink, but requires guidelines to be followed so it is clear which MAC SDU is currently in a state of fragmentation. To accomplish this, when a PSH is present, the fragmentation information for individual MAC SDUs or MAC SDU fragments is contained in the corresponding PSH. If no PSH is present, the fragmentation information for individual MAC SDU fragments is contained in the corresponding FSH. This is shown in Figure 44, where PSH_LEN is the length of the packing subheader.

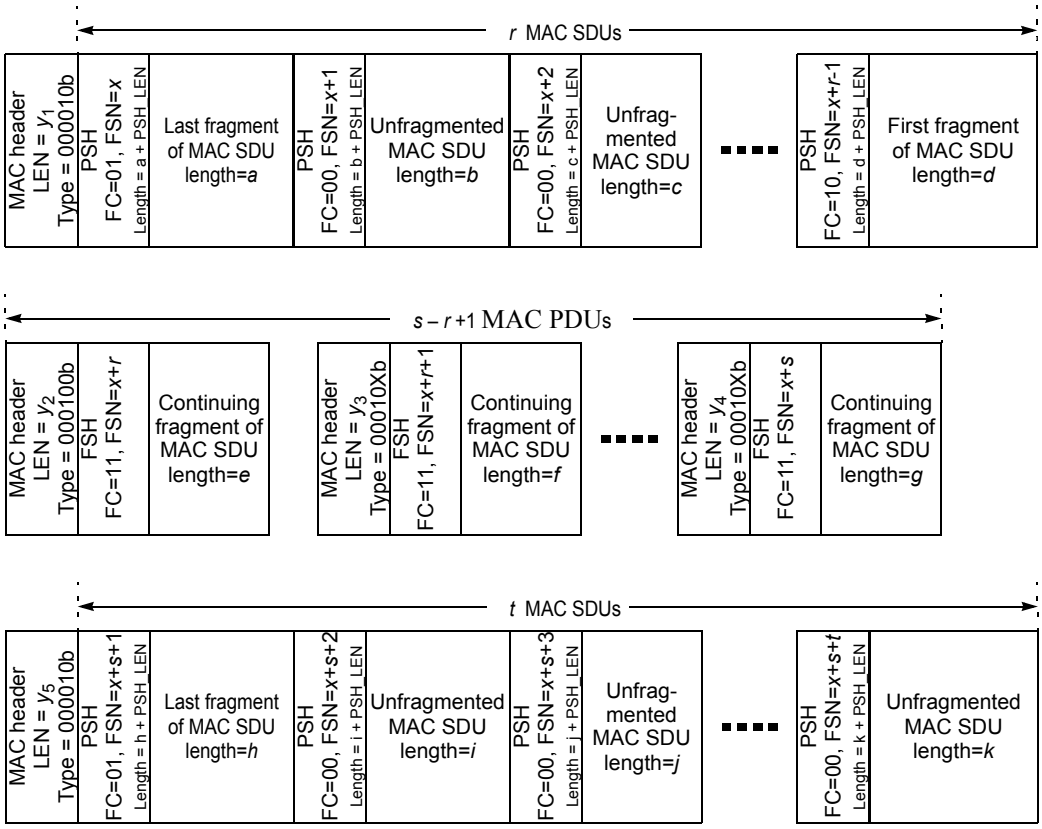

Figure 44—Packing with fragmentation

Note that while it is legal to have continuation fragments packed with other fragments, the circumstances for creating continuation fragments would preclude this from happening.

6.3.3.4.2 Packing for ARQ-enabled connections

The use of PSHs for ARQ-enabled connections is similar to that for non-ARQ connections as described in 6.3.3.4.1.2, except that ARQ-enabled connections shall set the Extended Type bit (see Table 6) in the generic MAC header to 1. If packing is turned on for a connection, the MAC may pack multiple MAC SDUs into a single MAC PDU. The transmitting side has full discretion whether to pack a group of MAC SDUs and/or fragments in a single MAC PDU.

The packing of variable-length MAC SDUs for the ARQ-enabled connections is similar to that of non-ARQ connections, when fragmentation is enabled. The BSN of the PSH shall be used by the ARQ protocol to identify and retransmit ARQ blocks.

For ARQ-enabled connections, when the type field indicates PSHs are in use, fragmentation information for each individual MAC SDU or MAC SDU fragment is contained in the associated PSH. When the type field indicates that packing is not in use, fragmentation information for the MAC PDU's single payload (MAC SDU or MAC SDU fragment) is contained in the FSH appearing in the message. Figure 45 illustrates the use of FSH without packing.

Generic MAC header	Other subheaders	FSH	Payload (One SDU or fragment of an SDU)	CRC-32

Figure 45—Example MAC PDU with extended FSHs

Figure 46 illustrates the structure of a MAC PDU with ARQ PSHs. Each of the packed MAC SDU or MAC SDU fragments or ARQ feedback payload requires its own PSH and some of them may be transmissions while others are retransmissions.

Generic MAC header	GMSH (UL only)	PSH	Payload (One SDU or SDU fragment or a set of ARQ Feedback IEs)	- -	PSH	Payload (One SDU or SDU fragment)	CRC-32

Figure 46—Example MAC PDU with ARQ PSH

A MAC SDU may be partitioned into multiple fragments that are then packed into the same MAC PDU for the first transmission. MAC PDUs may have fragments from the same or different SDUs, including a mix of first transmissions and retransmissions. The 11-bit BSN and 2-bit FC fields uniquely identify each fragment or nonfragmented SDU.

6.3.3.4.3 Packing ARQ Feedback IEs

An ARQ Feedback Payload (see Table 168) consists of one or more ARQ Feedback IEs (see 6.3.4.2). The ARQ Feedback Payload may be sent on an ARQ or non-ARQ connection; however, policies based on implementation and/or QoS constraints may restrict the use of certain connections for transporting ARQ Feedback Payload. The ARQ Feedback Payload is treated like any other payload (SDU or fragments) from the packing perspective, except that only one ARQ Feedback Payload shall be present within a single MAC PDU.

Table 168—ARQ Feedback Payload format

Syntax	Size (bit)	Notes
ARQ_Feedback_Payload_Format() {	—	—
do	—	—
ARQ_Feedback_IE(last)	*variable*	Insert as many as desired, until last == TRUE. See 6.3.4.2.
until (last)	—	—
}	—	—

The presence of an ARQ Feedback Payload in a MAC PDU is indicated by the value of the ARQ Feedback Payload bit in the Type field (see Table 6) in the generic MAC header. When present, the first packed payload shall be the ARQ Feedback Payload. The PSH preceding the ARQ Feedback Payload indicates the

total length of the payload including the PSH and all ARQ Feedback IEs within the payload. The FSN/BSN field of the PSH shall be ignored for the ARQ Feedback Payload and the FC bits shall be set to 00.

6.3.3.5 CRC calculation

A service flow may require that a CRC be added to each MAC PDU carrying data for that service flow (11.13.11). In this case, for each MAC PDU with HT = 0, a CRC32 (as defined in 6.3.3.5.1 for SC and OFDM mode and 6.3.3.5.2 for OFDMA mode), shall be appended to the payload of the MAC PDU; i.e., request MAC PDUs are unprotected. The CRC shall cover the generic MAC header and the payload of the MAC PDU. The CRC shall be calculated after encryption; i.e., the CRC protects the generic header and the ciphered payload.

6.3.3.5.1 CRC32 calculation for SC and OFDM mode

The data (input) bytes shall be flipped (for each byte exchange bit0 ↔ bit7, bit1 ↔ bit6, bit2 ↔ bit5, and bit3 ↔ bit4).

The CRC32 shall be calculated using the following standard generator polynomial of degree 32:

$$G(x) = x^{32} + x^{26} + x^{23} + x^{22} + x^{16} + x^{12} + x^{11} + x^{10} + x^{8} + x^{7} + x^{5} + x^{4} + x^{2} + x + 1$$

(where, the hexadecimal representation of truncated $G(x)$ is “0x04c11db7”)

The CRC32 is the 1’s complement of the sum (modulo 2) of the following:

a) The remainder of x^k $(x^{31} + x^{30} + x^{29} + \ldots + x^2 + x + 1)$ divided (modulo 2) by $G(x)$, where k is the number of bits in the input data, and

b) The remainder after multiplication of the bit-flipped input data (treated as a polynomial) by x^{32} and then division by $G(x)$.

The CRC32 field shall then be transmitted bit-flipped commencing with the most significant byte. (The first transmitted byte will have in its bit 7 the coefficient of x^{24} and in bit 0 the coefficient of x^{31}. The fourth byte will have the coefficient of x^0 in bit 7 and the coefficient of x^7 in bit 0).

As a typical implementation, at the transmitter, the initial remainder of the division is preset to all 1s and is then modified by division of the bit-flipped data by the generator polynomial $G(x)$. The 1’s complement of this remainder is then bit flipped byte after byte when transmitted, with the most significant byte first.

At the receiver, the initial remainder is preset to all 1s and the input bytes shall be flipped first and then treated as coefficient of a polynomial. When divided by $G(x)$, this polynomial shall results in the absence of transmission errors, in a unique nonzero remainder value. The unique remainder value is the polynomial:

$$x^{31} + x^{30} + x^{26} + x^{25} + x^{24} + x^{18} + x^{15} + x^{14} + x^{12} + x^{11} + x^{10} + x^{8} + x^{6} + x^{5} + x^{4} + x^{3} + x + 1$$

(or as its hexadecimal representation 0xC704DD7B)

6.3.3.5.1.1 CRC32 test vectors for SC and OFDM mode

The following is an example of CRC calculation in SC and OFDM mode:

Generic MAC header (Hex) = 40 40 1A 06 C4 5A
Payload (Hex) = BC F6 57 21 E7 55 36 C8 27 A8 D7 1B 43 2C A5 48
CRC32 for SC and OFDM mode (Hex) = CB B6 5F 48

6.3.3.5.2 CRC32 calculation for OFDMA mode

The data (input) bytes shall not be flipped as in OFDM mode.

The CRC32 shall be calculated using the following standard generator polynomial of degree 32:

$$G(x) = x^{32} + x^{26} + x^{23} + x^{22} + x^{16} + x^{12} + x^{11} + x^{10} + x^{8} + x^{7} + x^{5} + x^{4} + x^{2} + x + 1$$

(where, the hexadecimal representation of truncated *G(x)* is “0x04c11db7”)

At the transmitter, the following procedure is applied:

a) First 32 bits are complemented, which is equivalent to setting the initial value of the CRC register as 0xFFFFFFFF.
b) The first bit of the first field (MSB of the first byte of the MAC header) corresponds to the x^{n-1} term and the last bit of the last field corresponds to the x^0 term, where n is the number of bits in the input data sequence.
c) The resulting polynomial multiplied by x^{32} is divided by $G(x)$.
d) The remainder bit sequence is complemented.
e) The 32 bits of the CRC value are placed in the CRC field so that the x^{31} term is the left-most bit of the first byte, and the x^0 term is the right most bit of the last byte.
f) The resulting CRC field is sent MSB first (6.3.3.1).

At the receiver, the initial remainder is preset to all 1s and the input bytes shall be fed into the CRC engine MSB first. When divided by $G(x)$, this polynomial shall result in the absence of transmission errors, in a unique nonzero remainder value. The unique remainder value is the polynomial:

$$x^{31} + x^{30} + x^{26} + x^{25} + x^{24} + x^{18} + x^{15} + x^{14} + x^{12} + x^{11} + x^{10} + x^{8} + x^{6} + x^{5} + x^{4} + x^{3} + x + 1$$

(or as its hexadecimal representation 0xC704DD7B)

6.3.3.5.2.1 CRC32 test vectors for OFDMA mode

The following is an example of CRC calculation in OFDMA mode:

Generic MAC header (Hex) = 40 40 1A 06 C4 5A
Payload (Hex) = BC F6 57 21 E7 55 36 C8 27 A8 D7 1B 43 2C A5 48
CRC32 for OFDMA mode (Hex) = 1B D1 BA 21

6.3.3.6 Encryption of MAC PDUs

When transmitting a MAC PDU on a connection that is mapped to an SA, the sender shall perform encryption and data authentication of the MAC PDU payload as specified by that SA. When receiving a MAC PDU on a connection mapped to an SA, the receiver shall perform decryption and data authentication of the MAC PDU payload, as specified by that SA.

The generic MAC header shall not be encrypted. The header contains all the encryption information [EC field, EKS (encryption key sequence) field, and CID] needed to decrypt a payload at the receiving station. This is illustrated in Figure 47.

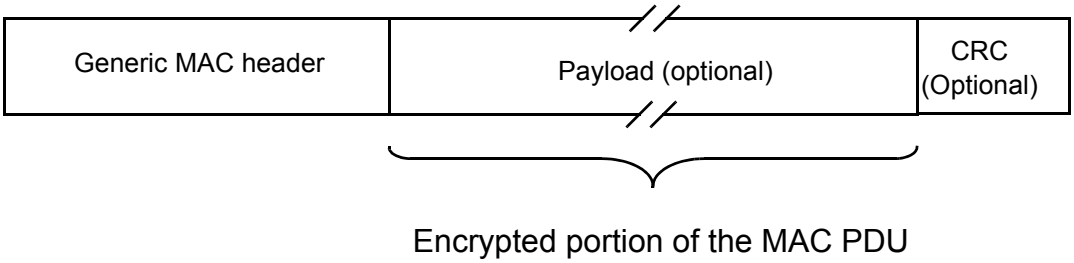

Figure 47—MAC PDU encryption

Two bits of a MAC header contain a key sequence number. Note that the keying material associated with an SA has a limited lifetime, and the BS periodically refreshes an SA's keying material. The BS manages a 2-bit key sequence number independently for each SA and distributes this key sequence number along with the SA's keying material to the client SS. The BS increments the key sequence number with each new generation of keying material. The MAC header includes this sequence number to identify the specific generation of that SA keying material being used to encrypt the attached payload. Being a 2-bit quantity, the sequence number wraps around to 0 when it reaches 3.

Comparing a received MAC PDU's key sequence number with what it believes to be the "current" key sequence number, the SS or the BS can easily recognize a loss of key synchronization with its peer. An SS shall maintain the two most recent generations of keying material for each SA. Keeping on hand the two most recent key generations is necessary for maintaining uninterrupted service during an SA's key transition.

Encryption of the payload is indicated by the EC bit field. A value of 1 indicates the payload is present and encrypted and the EKS field contains meaningful data. A value of 0 indicates the payload is not encrypted or not present. Any MAC PDU containing an unencrypted payload received on a connection mapped to an SA requiring encryption shall be discarded.

6.3.3.7 Padding

Within a data burst, the unused portion shall be initialized to a known state. This may be accomplished by setting each unused byte to the stuff byte value (0xFF). If the size of the unused region is at least the size of a MAC header, the region may also be initialized by formatting the unused space as a MAC PDU. When doing so, the MAC header CID field shall be set to the value of the Padding CID (see Table 558); the CI, EC, HT, and Type fields shall be set to zero; the length field shall be set to the number of unused bytes (including the size of the MAC header created for the padding MAC PDU) in the data burst; and the HCS shall be computed in the normal way.

6.3.4 ARQ mechanism

ARQ shall not be used with the PHY specification defined in 8.1. If ARQ is supported, then support of the 'cumulative ACK entry' and at least one of other acknowledgement types is mandatory.

The ARQ mechanism is a part of the MAC, which is optional for implementation. When implemented, ARQ may be enabled on a per-connection basis. The per-connection ARQ shall be specified and negotiated during connection creation. A connection cannot have a mixture of ARQ and non-ARQ traffic. Similar to other properties of the MAC protocol the scope of a specific instance of ARQ is limited to one unidirectional connection.

For ARQ-enabled connections, enabling of fragmentation is optional. When fragmentation is enabled, the transmitter may partition each SDU into fragments for separate transmission based on the value of the

ARQ_BLOCK_SIZE parameter. When fragmentation is not enabled, the connection shall be managed as if fragmentation was enabled. In this case, regardless of the negotiated block size, each fragment formed for transmission shall contain all the blocks of data associated with the parent SDU.

The ARQ feedback information can be sent as a standalone MAC management message on the appropriate basic management connection, or it can be piggybacked on an existing connection. ARQ feedback cannot be fragmented.

6.3.4.1 ARQ block usage

A MAC SDU is logically partitioned into blocks whose length is specified by the connection TLV parameter ARQ_BLOCK_SIZE. When the length of the SDU is not an integer multiple of the connection's block size, the final block of the SDU is formed using the SDU bytes remaining after the final full block has been determined.

Once an SDU is partitioned into a set of blocks, that partitioning remains in effect until all blocks of the SDU are successfully delivered to the receiver, or the SDU is discarded by the transmitter state machine.

Sets of blocks selected for transmission or retransmission are encapsulated into a PDU. A PDU may contain blocks that are transmitted for the first time as well as those being retransmitted. Fragmentation shall occur only on ARQ block boundaries. If a PDU is not packed, all the blocks in that PDU shall have contiguous block numbers. When a PDU is packed, the sequence of blocks immediately between MAC subheaders and the sequence of blocks after the last PSH shall have contiguous block numbers.

If ARQ is enabled at the connection, FSH and PSH contain a BSN, which is the sequence number of the first ARQ block in the sequence of blocks following the subheader. It is a matter of transmitter policy whether a set of blocks once transmitted as a single PDU should be retransmitted also as a single PDU. Figure 48 illustrates the use of blocks for ARQ transmissions and retransmissions; two options for retransmission are presented—with and without rearrangements of blocks.

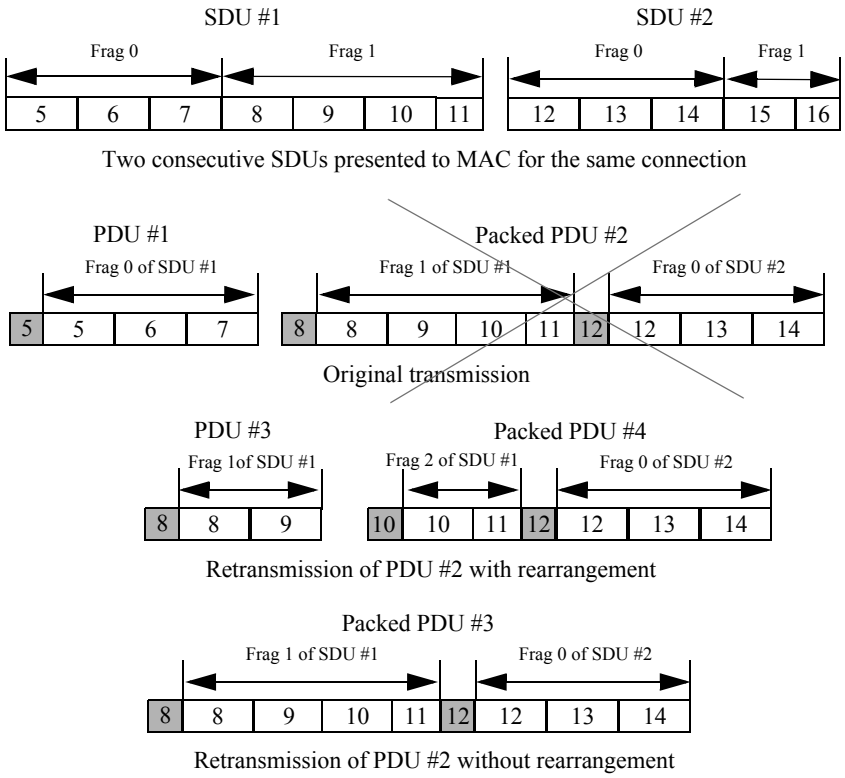

Figure 48—Block usage examples for ARQ with and without rearrangement

6.3.4.2 ARQ Feedback IE format

Table 169 defines the ARQ Feedback IE used by the receiver to signal positive or negative acknowledgments. A set of IEs of this format may be transported either as a packed payload ("piggybacked") within a packed MAC PDU or as a payload of a standalone MAC PDU.

Table 169—ARQ Feedback IE format

Syntax	Size (bit)	Notes
ARQ_Feedback_IE (LAST) {	*variable*	—
CID	16	The ID of the connection being referenced
LAST	1	0 = More ARQ Feedback IE in the list 1 = Last ARQ Feedback IE in the list
ACK Type	2	0x0 = Selective ACK entry 0x1 = Cumulative ACK entry 0x2 = Cumulative with Selective ACK entry 0x3 = Cumulative ACK with Block Sequence Ack entry

Table 169—ARQ Feedback IE format *(continued)*

Syntax	Size (bit)	Notes
BSN	11	—
Number of ACK Maps	2	If ACK Type == 01, the field is reserved and set to 00. Otherwise the field indicates the number of ACK maps: 0x0 = 1, 0x1 = 2, 0x2 = 3, 0x3= 4
if (ACK Type != 01) {	—	—
for (*i* = 0; *i* < Number of ACK Maps + 1; ++*i*) {	—	—
if (ACK Type != 3) {	—	—
Selective ACK Map	16	—
}	—	—
else {	—	Start of Block Sequence ACK Map definition (16 bits)
Sequence Format	1	Number of block sequences associated with descriptor 0: 2 block sequences 1: 3 block sequences
if (Sequence Format = 0) {	—	—
Sequence ACK Map	2	—
Sequence 1 Length	6	—
Sequence 2 Length	6	—
Reserved	1	—
}	—	—
else {	—	—
Sequence ACK Map	3	—
Sequence 1 Length	4	—
Sequence 2 Length	4	—
Sequence 3 Length	4	—
}	—	—
}	—	End of Block Sequence ACK Map definition
}	—	—
}	—	—
}	—	—

BSN

If (ACK Type == 0x0): BSN value corresponds to the MSB of the first 16-bit ARQ ACK map and follows an MSB first approach with the BSN incremented by 1 for each bit in the ARQ ACK map, following through for the subsequent ARQ ACK maps.

If (ACK Type == 0x1): BSN value indicates that its corresponding block and all blocks with lesser (see 6.3.4.6.1) values within the transmission window have been successfully received.

If (ACK Type == 0x2): Combines the functionality of types 0x0 and 0x1.

If (ACK Type == 0x3): Combines the functionality of type 0x1 with the ability to acknowledge reception of ARQ blocks in terms of block sequences. A block sequence is defined as a set of ARQ blocks with consecutive BSN values. With this option, members of block sequences are identified and associated with the same reception status indication.

Selective ACK Map

Each bit set to one indicates the corresponding ARQ block has been received without errors. The bit corresponding to the BSN value in the IE, is the MSB of the first map entry. The bits for succeeding block numbers are assigned left-to-right (MSB to LSB) within the map entry. If the ACK Type is 0x2, then the MSB of the first map entry shall be set to one and the IE shall be interpreted as a cumulative ACK for the BSN value in the IE. The rest of the bitmap shall be interpreted similar to ACK Type 0x0.

Sequence ACK Map

Each bit set to one indicates the corresponding block sequence has been received without error. The MSB of the field corresponds to the first sequence length field in the descriptor. The bits for succeeding length fields are assigned left-to-right within the map entry.

Since the block sequence described by the first descriptor of the first map entry of the IE corresponds to the sequence of blocks immediately after the Cumulative ACK, the ACK map bit for this sequence shall be zero indicating this sequence has not yet been received.

Sequence Length

This value indicates the number of blocks that are members of the associated sequence.

The BSN of the first block of the block sequence described by the first descriptor of the first IE map entry is the value of the Cumulative ACK plus one. The BSN of the first block of each block sequence is determined by adding the BSN of the first block of the previous block sequence to the length of that sequence. Within a map entry, Sequence Map/Length ordering follows the rule specified in the definition of Sequence ACK Map. Across map entries, ordering moves from the first map entry (i = 0) to the last map entry (i = **Number of ACK Maps)**.

6.3.4.2.1 ARQ Feedback IE format with extended capability

Table 170 defines the ARQ Feedback IE used by the receiver to signal positive or negative Acknowledgments when the BS and MS use extended capability (11.7.8.11, bit 0 set to 1). A set of IEs of this format may be transported either as a packed payload ("piggybacked") within a packed MAC PDU or as a payload of a standalone MAC PDU.

Table 170—ARQ Feedback IE format with extended capability

Syntax	Size (bits)	Notes
ARQ_feedback_IE(LAST){	*variable*	
CID	16	The ID of the connection being referenced
LAST	1	0 = More ARQ feedback IEs in the list 1 = Last ARQ feedback IE in the list

Table 170—ARQ Feedback IE format with extended capability *(continued)*

Syntax	Size (bits)	Notes
ACK Type	3	0x0 = Selective ACK entry 0x1 = Cumulative ACK entry 0x2 = Cumulative with Selective ACK entry 0x3 = Cumulative ACK with Block Sequence ACK entry 0x4 = Block Sequence ACK entry 0x5–0x7 *Reserved*, set to zero
BSN	11	
Reserved	1	Set to 0
if(ACK Type != 1){	—	—
if(ACK Type == 0 || ACK Type == 2){	—	—
MAP Last Bit	1	0: Another ACK Map follows 1: This is the last ACK Map
Selective ACK Map	15	—
}	—	
else{	—	
MAP Last Bit	1	0: Another Sequence Format follows 1: This is the last Sequence Format
Sequence Format	1	Number of block sequences associated with descriptor 0: 2 block sequences 1: 3 block sequences
if(ACK Type == 3){	—	—
if(Sequence Format == 0){	—	—
Sequence ACK Map	1	This bit corresponds to the sequence 2 length field in the descriptor
Sequence 1 Length	6	Sequence 1 field always represents NAK blocks
Sequence 2 Length	7	—
}	—	—
else{	—	—
Sequence ACK Map	2	
Sequence 1 Length	4	
Sequence 2 Length	4	
Sequence 3Length	4	
}	—	End of Block Sequence ACK Map definition
}	—	—
if(ACK Type == 4){	—	—
Sequence ACK Map	2	—

Table 170—ARQ Feedback IE format with extended capability *(continued)*

Syntax	Size (bits)	Notes
Sequence 1 Length	6	—
Sequence 2 Length	6	—
}	—	—
else{	—	—
Sequence ACK Map	3	—
Sequence 1 Length	4	—
Sequence 2 Length	4	—
Sequence 3 Length	3	—
}	—	—
}	—	—
}	—	—
while(!Map Last bit){	—	—
if(ACK Type == 0 || ACK Type == 2){	—	—
MAP Last Bit	1	0: Another ACK Map follows 1: This is the last ACK Map
Selective ACK Map	15	—
}	—	—
else{	—	—
MAP Last Bit	1	0: Another Sequence Format follows 1: This is the last Sequence Format
Sequence Format	1	Number of block sequences associated with descriptor 0: 2 block sequences 1: 3 block sequences
if(Sequence Format == 0){	—	—
Sequence ACK Map	2	—
Sequence 1 Length	6	—
Sequence 2 Length	6	—
}	—	—
else{	—	—
Sequence ACK Map	3	—
Sequence 1 Length	4	—
Sequence 2 Length	4	—
Sequence 3 Length	3	—
}	—	—

Table 170—ARQ Feedback IE format with extended capability *(continued)*

Syntax	Size (bits)	Notes
}	—	—
}	—	—
}	—	—

BSN

If the ACK Type is 0x0, the BSN value corresponds to the MSB of the first 16-bit ARQ ACK map and follows an MSB-first approach with the BSN incremented by 1 for each bit in the ARQ ACK map, following through for the subsequent ARQ ACK maps. If the ACK Type is 0x1, the BSN value indicates that its corresponding block and all blocks with lesser (see 6.3.4.6.1) values within the transmission window have been successfully received. If ACK Type == 0x2, the BSN combines the functionality of types 0x0 and 0x1. If the ACK Type is 0x3, the BSN combines the functionality of type 0x1 with the ability to acknowledge reception of ARQ blocks in terms of block sequences. A block sequence is defined as a set of ARQ blocks with consecutive BSN values. With this option, members of block sequences are identified and associated with the same reception status indication. If the ACK Type is 0x4, the BSN value corresponds to the first block of the first sequence of the first map. The block sequences are defined the same way as ACK type 0x3.

Selective ACK Map

Each following bit set to one indicates the corresponding ARQ block has been received without errors. The bit corresponding to the BSN value in the IE, is the MSB of the first map entry. The bits for succeeding block numbers are assigned left-to-right (MSB to LSB) within the map entry. If the ACK Type is 0x2, then the MSB of the first map entry represents the MAP Last field and the following shall be set to one and the IE shall be interpreted as a cumulative ACK for the BSN value in the IE. The rest of the bitmap shall be interpreted similarly to ACK Type 0x0.

Sequence ACK Map

Each bit set to one indicates that the corresponding block sequence has been received without error. The MSB of the field corresponds to the MAP Last field and the following corresponds to the first sequence length field in the descriptor. The bits for succeeding length fields are assigned left-to-right within the map entry. Since the block sequence described by the first descriptor of the first map entry of the IE corresponds to the sequence of blocks immediately after the Cumulative ACK, the ACK map bit for this sequence is omitted assuming a value of zero.

Each bit set to one indicates the corresponding block sequence has been received without error. The Sequence ACK Map of the first ACK Map of ACK type 0x3 is one bit or two bits long depending on the Sequence format. The most significant bit of the first ACK Map refers to the second sequence length.

The following ACK Maps, and maps of ACK type 0x4, are two bits or three bits long, depending on the Sequence Format. The MSB of the field corresponds to the first sequence length field in the descriptor.

The bits for succeeding length fields are assigned left-to-right within the map entry.

Sequence Length

This value indicates the number of blocks that are members of the associated sequence. The BSN of the first block of the block sequence described by the first descriptor of the first IE map entry is the value of the Cumulative ACK plus one. The BSN of the first block of each block sequence is determined by adding the BSN of the first block of the previous block sequence to the length of that sequence. Within a map entry, Sequence Map/Length ordering follows the rule specified in the definition of Sequence ACK Map. Across map entries, ordering moves from the first map entry (i = 0) to the last map entry (i = Number of ACK Maps).

6.3.4.3 ARQ parameters

6.3.4.3.1 ARQ_BSN_MODULUS

ARQ_BSN_MODULUS is equal to the number of unique BSN values, i.e., 2^{11}.

6.3.4.3.2 ARQ_WINDOW_SIZE

ARQ_WINDOW_SIZE is the maximum number of ARQ blocks with consecutive BSN in the sliding window of ARQ blocks that is managed by the receiver and the transmitter.

ARQ_WINDOW_SIZE shall be less than or equal to half of the *ARQ_BSN_MODULUS*.

6.3.4.3.3 ARQ_BLOCK_LIFETIME

ARQ_BLOCK_LIFETIME is the maximum time interval an ARQ block shall be managed by the transmitter ARQ state machine, once initial transmission of the block has occurred. If transmission (or subsequent retransmission) of the block is not acknowledged by the receiver before the time limit is reached, the block is discarded. The start of the block's lifetime shall be the frame in which the block was first transmitted.

6.3.4.3.4 ARQ_RETRY_TIMEOUT

ARQ_RETRY_TIMEOUT is the minimum time interval a transmitter shall wait before retransmission of an unacknowledged block for retransmission. The interval begins when the ARQ block was last transmitted. On connections that use both HARQ and ARQ, the ARQ_RETRY_TIMEOUT value shall be set accordingly to allow HARQ retransmission operation of the ARQ block to be completed before ARQ retransmission occurs. An ARQ block is unacknowledged if it has been transmitted but no acknowledgment has been received.

6.3.4.3.5 ARQ_SYNC_LOSS_TIMEOUT

ARQ_SYNC_LOSS_TIMEOUT is the maximum time interval *ARQ_TX_WINDOW_START* or *ARQ_RX_WINDOW_START* shall be allowed to remain at the same value before declaring a loss of synchronization of the sender and receiver state machines when data transfer is known to be active. The ARQ receiver and transmitter state machines manage independent timers. Each has its own criteria for determining when data transfer is "active" (see 6.3.4.6.2 and 6.3.4.6.3).

6.3.4.3.6 ARQ_RX_PURGE_TIMEOUT

ARQ_RX_PURGE_TIMEOUT is the time interval the receiver shall wait after successful reception of a block that does not result in advancement of *ARQ_RX_WINDOW_START*, before advancing *ARQ_RX_WINDOW_START* (see 6.3.4.6.3).

6.3.4.3.7 ARQ_BLOCK_SIZE

ARQ_BLOCK_SIZE is the length used for partitioning an SDU into a sequence of ARQ blocks prior to transmission (see 6.3.4.1)

6.3.4.4 ARQ procedures

6.3.4.4.1 ARQ state machine variables

All ARQ state machine variables are set to 0 at connection creation or by an ARQ reset operation.

6.3.4.4.1.1 Transmitter variables

ARQ_TX_WINDOW_START: All BSN up to (*ARQ_TX_WINDOW_START* – 1) have been acknowledged.

ARQ_TX_NEXT_BSN: BSN of the next block to send. This value shall reside in the interval *ARQ_TX_WINDOW_START* to (*ARQ_TX_WINDOW_START* + *ARQ_WINDOW_SIZE*), inclusive.

6.3.4.4.1.2 Receiver variables

ARQ_RX_WINDOW_START: All BSN up to (*ARQ_RX_WINDOW_START* – 1) have been correctly received.

ARQ_RX_HIGHEST_BSN: BSN of the highest block received, plus one. This value shall reside in the interval *ARQ_RX_WINDOW_START* to (*ARQ_RX_WINDOW_START* + *ARQ_WINDOW_SIZE*), inclusive.

6.3.4.5 ARQ-enabled connection setup and negotiation

Connections are set up and defined dynamically through the DSA/DSC class of messages. CRC-32 shall be used for error detection of PDUs for all ARQ-enabled connections. All the ARQ parameters (see 6.3.4.3) shall be set when an ARQ-enabled connection is set up. The transmitter and receiver variables (defined in 6.3.4.4.1) shall be reset on connection setup.

6.3.4.6 ARQ operation

6.3.4.6.1 Sequence number comparison

Transmitter and receiver state machine operations include comparing BSNs and taking actions based on which is larger or smaller. In this context, it is not possible to compare the numeric sequence number values directly to make this determination. Instead, the comparison shall be made by normalizing the values relative to the appropriate state machine base value and the maximum value of sequence numbers, *ARQ_BSN_MODULUS*, and then comparing the normalized values. Normalization is accomplished by using Equation (1).

$$bsn' = (bsn - BSN\_base) \bmod ARQ\_BSN\_MODULUS \quad (1)$$

The base values for the receiver and transmitter state machines are *ARQ_TX_WINDOW_START* and *ARQ_RX_WINDOW_START*, respectively.

6.3.4.6.2 Transmitter state machine

An ARQ block may be in one of the following four states—not-sent, outstanding, discarded, and waiting-for-retransmission. Any ARQ block begins as not-sent. After it is sent it becomes outstanding for a period of time termed ARQ_RETRY_TIMEOUT. While a block is in outstanding state, it is either acknowledged and discarded, or transitions to waiting-for-retransmission after ARQ_RETRY_TIMEOUT or NACK. An ARQ block can become waiting-for-retransmission before the ARQ_RETRY_TIMEOUT period expires if it is negatively acknowledged. An ARQ block may also change from waiting-for-retransmission to discarded when an ACK message for it is received or after a timeout ARQ_BLOCK_LIFETIME.

For a given connection the transmitter shall first handle (transmit or discard) blocks in "*waiting-for-retransmission*" state and only then blocks in "*nonsent*" state. Blocks in "*outstanding*" or "*discarded*" state shall not be transmitted. When blocks are retransmitted, the block with the lowest BSN shall be retransmitted first.

The ARQ Tx block state sequence is shown in Figure 49.

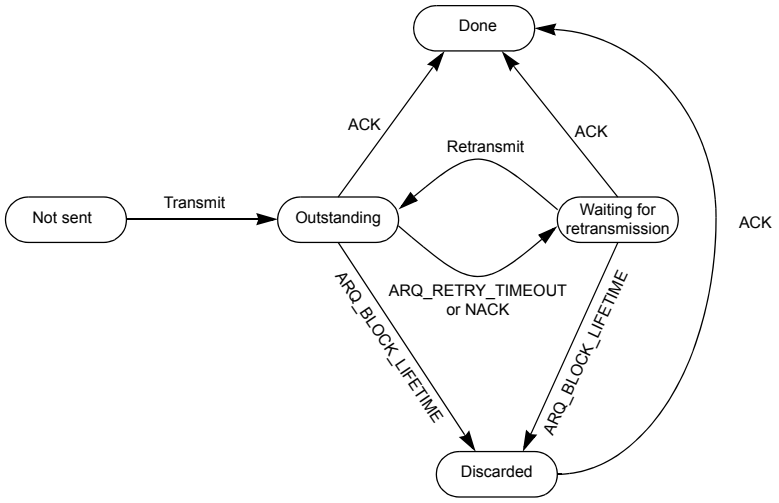

Figure 49—ARQ Tx block states

MAC PDU formation continues with a connection's "not-sent" MAC SDUs. The transmitter builds each MAC PDU using the rules for fragmentation and packing as long as the number of blocks to be sent plus the number of block already transmitted and awaiting retransmission does not exceed the limit imposed by *ARQ_WINDOW_SIZE*. As each "not-sent" block is formed and included in a MAC PDU, it is assigned the current value of *ARQ_TX_NEXT_BSN*, which is then incremented.

When a Cumulative ACK acknowledgment is received, the transmitter shall check the validity of the BSN. A valid BSN is one in the interval *ARQ_TX_WINDOW_START* to *ARQ_TX_NEXT_BSN* – 1 (inclusive). If BSN is not valid, the transmitter shall ignore the acknowledgment.

When a Selective ACK, Cumulative+Selective ACI or Cumulative ACK with Block Sequence acknowledgement is received, the transmitter shall check the validity of each block described in the message. The acknowledgement of a block is valid if its corresponding block number lies in the interval ARQ_TX_WINDOW_START to ARQ_TX_NEXT_BSN-1 (inclusive). If the block number lies outside this interval, the transmitter shall ignore the acknowledgement of that block.

When a cumulative acknowledgment with a valid BSN is received, the transmitter shall consider all blocks in the interval *ARQ_TX_WINDOW_START* to BSN (inclusive) as acknowledged and set *ARQ_TX_WINDOW_START* to BSN + 1.

When a selective acknowledgment is received, the transmitter shall consider as acknowledged all blocks so indicated by the entries in the bitmap for valid BSN values. As the bitmap entries are processed in increasing BSN order, *ARQ_TX_WINDOW_START* shall be incremented each time the BSN of an acknowledged block is equal to the value of *ARQ_TX_WINDOW_START.*

When *ARQ_TX_WINDOW_START* has been advanced by either of the above methods and acknowledgment of reception has already been received for the block with the BSN value now assigned to *ARQ_TX_WINDOW_START*, the value of *ARQ_TX_WINDOW_START* shall be incremented until a BSN value is reached for which no acknowledgment has been received.

A bitmap entry not indicating acknowledgement shall be considered a NACK for the corresponding blocks.

NOTE—Selective ACK bit-maps are referenced to a specific BSN, which indicates to absolute number of the block referenced by the first bit in the bit-map. It is the responsibility of the ARQ feedback sender to assign the BSN so that all bits in the bitmap define either ACK or NAK for a specific ARQ block. This can be achieved by assigning the BSN low enough (modulo 2^{11}) so that every bit in the bit map provides correct feedback information.

When a cumulative with selective acknowledgment and a valid BSN is received, the transmitter performs the actions described above for cumulative acknowledgment, followed by those for a selective acknowledgment.

All timers associated with acknowledged blocks shall be cancelled.

A Discard message shall be sent following violation of *ARQ_BLOCK_LIFETIME*. The message may be sent immediately or may be delayed up to *ARQ_RX_PURGE_TIMEOUT* + *ARQ_RETRY_TIMEOUT.* If ARQ_RX_PURGE_TIMEOUT is infinite (i.e., has value zero) then the message may be delayed up to ARQ_RETRY TIMEOUT. Following the first transmission, subsequent discard orders shall be sent to the receiver at intervals of *ARQ_RETRY_TIMEOUT* until an acknowledgment to the discarded BSN has been received. Discard orders for adjacent BSN values may be accumulated in a single Discard message.

The actions to be taken by the transmitter state machine when it wants to initiate a reset of the receiver ARQ state machine are provided in Figure 50. The actions to be taken by the receiver state machine when it initiates an ARQ Reset message are provided in Figure 51.

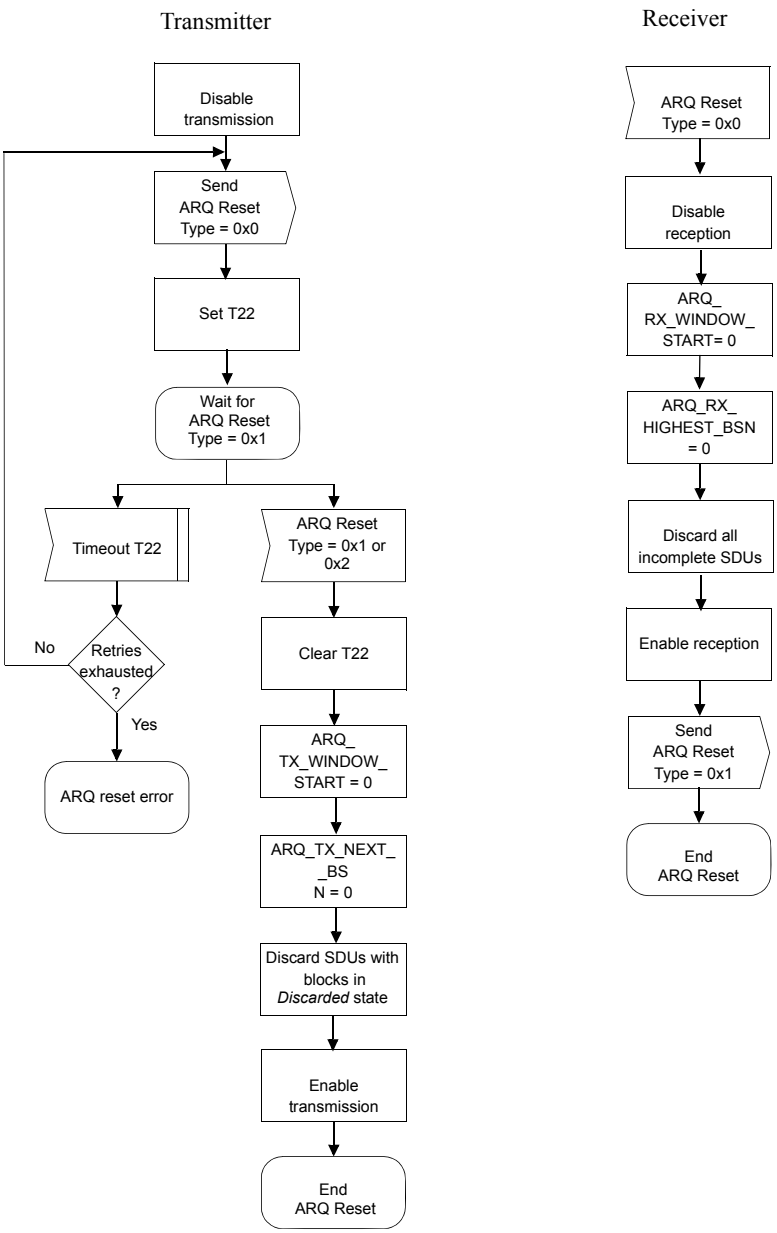

Figure 50—ARQ Reset message dialog—Transmitter-initiated

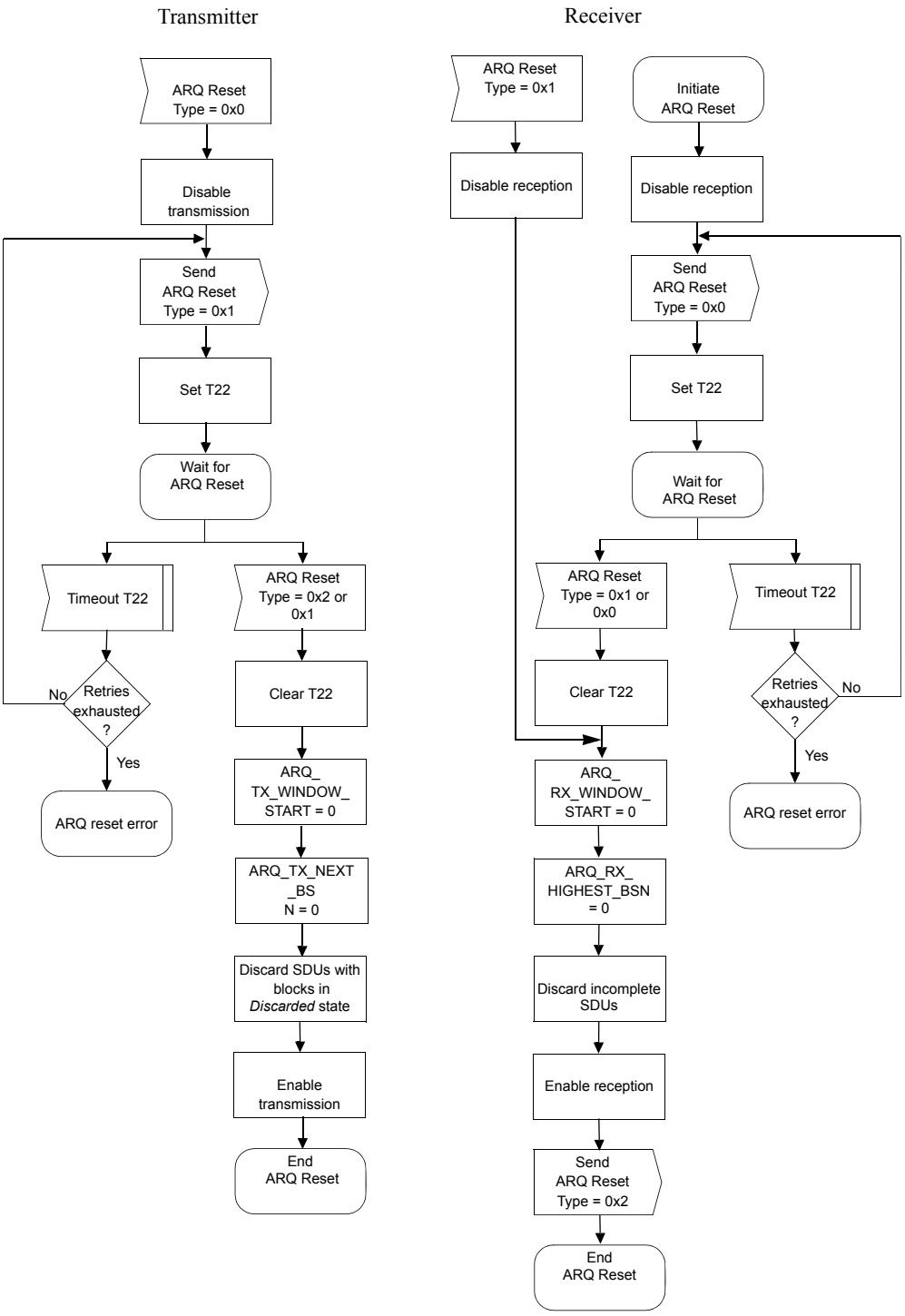

Figure 51—ARQ Reset message dialog—Receiver-initiated

Synchronization of the ARQ state machines is governed by a timer managed by the transmitter state machine. Each time *ARQ_TX_WINDOW_START* is updated, the timer is set to zero. When the timer exceeds the value of *ARQ_SYNC_LOSS_TIMEOUT,* the transmitter state machine shall initiate a reset of the connection's state machines as described in Figure 50.

When in ARQ reset error state in Figure 50 and Figure 51, the SS shall reinitialize its MAC, and the behavior for BS is implementation dependent.

A Discard message may be sent to the receiver when the transmitter wants to skip ARQ blocks up to the BSN value specified in the Discard message. Upon receipt of the message, the receiver updates its state information to indicate the specified blocks were received and forwards the information to the transmitter through an ARQ Feedback IE at the appropriate time.

6.3.4.6.3 Receiver state machine

When a PDU is received, its integrity is determined based on the CRC-32 checksum. If a PDU passes the checksum, it is unpacked and defragmented, if necessary. The receiver maintains a sliding-window defined by *ARQ_RX_WINDOW_START* state variable and the *ARQ_WINDOW_SIZE* parameter. When an ARQ block with a number that falls in the range defined by the sliding window is received, the receiver shall accept it. ARQ block numbers outside the sliding window shall be rejected as out of order. The receiver should discard duplicate ARQ blocks (i.e., ARQ blocks that where already received correctly) within the window. See Figure 52.

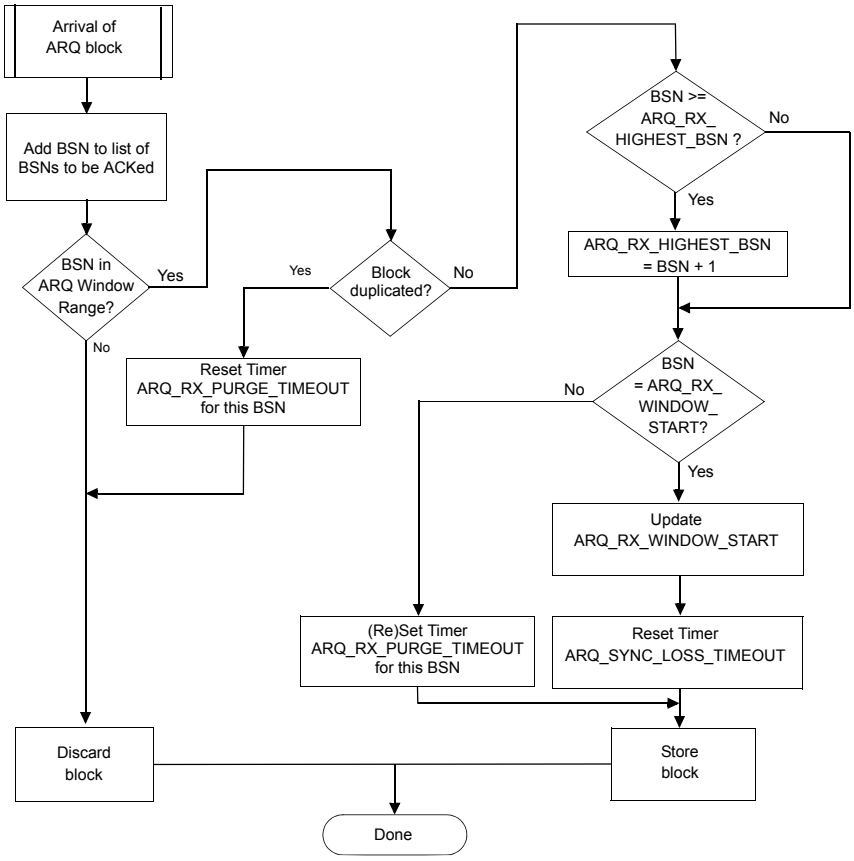

Figure 52—ARQ block reception

The sliding window is maintained so that the *ARQ_RX_WINDOW_START* variable always points to the lowest numbered ARQ block that has not been received or has been received with errors. When an ARQ block with a number corresponding to the *ARQ_RX_WINDOW_START* is received, the window is advanced (i.e., *ARQ_RX_WINDOW_START* is incremented modulo *ARQ_BSN_MODULUS*) so that the *ARQ_RX_WINDOW_START* variable points to the next lowest numbered ARQ block that has not been received or has been received with errors. The timer associated with *ARQ_SYNC_LOSS_TIMEOUT* shall be reset.

When a block does not result in an advance of the ARQ_RX_WINDOW_START, the ARQ_RX_PURGE_TIMEOUT for that block shall be started. When the value of the timer for a block exceeds *ARQ_RX_PURGE_TIMEOUT*, the timeout condition is marked. When the timeout condition is marked, *ARQ_RX_WINDOW_START* is advanced to the BSN of the next block not yet received after the marked block. Timers for delivered blocks remain active and are monitored for timeout until the BSN values are outside the receive window.

When *ARQ_RX_WINDOW_START* is advanced, any BSN values corresponding to blocks that have not yet been received residing in the interval between the previous and current *ARQ_RX_WINDOW_START* value shall be marked as received and the receiver shall send an ARQ Feedback IE to the transmitter with the updated information. Any blocks belonging to complete SDUs shall be delivered. Blocks from partial SDUs shall be discarded.

When a discard message is received from the transmitter, the receiver shall discard the specified blocks, advance *ARQ_RX_WINDOW_START* to the BSN of the first block not yet received after the BSN provided in the Discard message, and mark all not received blocks in the interval from the previous to new *ARQ_RX_WINDOW_START* values as received for ARQ Feedback IE reporting.

For each ARQ block received, an acknowledgment shall be sent to the transmitter. Acknowledgment for blocks outside the sliding window shall be cumulative. Acknowledgments for blocks within the sliding window may be either for specific ARQ blocks (i.e., contain information on the acknowledged ARQ block numbers), or cumulative (i.e., contain the highest ARQ block number below which all ARQ blocks have been received correctly) or a combination of both (i.e., cumulative with selective). Acknowledgments shall be sent in the order of the ARQ block numbers they acknowledge. The frequency of acknowledgment generation is not specified here and is implementation dependent.

A MAC SDU is ready to be handed to the upper layers when all of the ARQ blocks of the MAC SDU have been correctly received within the time-out values defined.

When *ARQ_DELIVER_IN_ORDER* is enabled, a MAC SDU is handed to the upper layers as soon as all the ARQ blocks of the MAC SDU have been correctly received within the defined time-out values and all blocks with sequence numbers smaller than those of the completed message have either been discarded due to time-out violation or delivered to the upper layers.

When *ARQ_DELIVER_IN_ORDER* is not enabled, MAC SDUs are handed to the upper layers as soon as all blocks of the MAC SDU have been successfully received within the defined time-out values.

The actions to be taken by the receiver state machine when an ARQ Reset message is received are provided in Figure 50. The actions to be taken by the receiver state machine when it wants to initiate a reset of the transmitter ARQ state machine are provided in Figure 51.

Synchronization of the ARQ state machines is governed by a timer managed by the receiver state machine. Each time *ARQ_RX_WINDOW_START* is updated, the timer is set to zero. When the timer exceeds the value of *ARQ_SYNC_LOSS_TIMEOUT,* the receiver state machine shall initiate a reset of the connection's state machines as described in Figure 51.

6.3.5 Scheduling services

Scheduling services represent the data handling mechanisms supported by the MAC scheduler for data transport on a connection. Each connection is associated with a single scheduling service. A scheduling service is determined by a set of QoS parameters that quantify aspects of its behavior. These parameters are managed using the DSA and DSC message dialogs. A detailed description of each QoS parameter is provided in 11.13.

Well-known scheduling services can be implemented by specifying a specific set of QoS parameters.

Table 171 describes the QoS parameters that would provide a scheduling service to support real-time data streams consisting of fixed-size data packets issued at periodic intervals, such as T1/E1 and Voice over IP without silence suppression.

Table 171—Example of QoS parameters providing scheduling service to support real-time constant bit-rate data streams

Parameter	Meaning
Tolerated jitter	As in 11.13.12
If (Fixed length SDU) {	
SDU size	As in 11.13.15
}	
Minimum reserved traffic rate	As in 11.13.8
Maximum Latency	As in 11.13.13
Request/Transmission Policy	As in 11.13.11
If (UL service flow){	
Grant Scheduling Type	UGS as specified in 6.3.5.2.1
Unsolicited Grant Interval	As in 11.13.19
}	

Table 172 describes the QoS parameters that would provide a scheduling service to support real-time data streams consisting of variable-size data packets that are issued at periodic intervals, such as moving pictures experts group (MPEG) video.

Table 172—Example of QoS parameters providing scheduling service to support real-time variable-rate data streams

Parameter	Meaning
Maximum Latency	As in 11.13.13
Minimum Reserved Traffic Rate	As in 11.13.8
Maximum Sustained Traffic Rate	As in 11.13.6
Traffic Priority	As in 11.13.5

Table 172—Example of QoS parameters providing scheduling service to support real-time variable-rate data streams *(continued)*

Parameter	Meaning
Request/Transmission Policy	As in 11.13.11
If (UL service flow){	
Scheduling Type	rtPS as in 6.3.5.2.2
Unsolicited Polling Interval	As in 11.13.20
}	

Table 173 describes the QoS parameters that would provide a scheduling service to support delay-tolerant data streams consisting of variable-size data packets for which a minimum data rate is required, such as FTP.

Table 173—Example of QoS parameters providing scheduling service to support delay-tolerant variable-rate data streams

Parameter	Meaning
Minimum Reserved Traffic Rate	As in 11.13.8
Maximum Sustained Traffic Rate	As in 11.13.15
Traffic Priority	As in 11.13.5
Request/Transmission Policy	As in 11.13.11
If (UL service flow){	
Scheduling Type	nrtPS as in 6.3.5.2.3
}	

Table 174 describes the QoS parameters that would provide a scheduling service to support data streams for which no minimum service level is required and therefore may be handled on a space-available basis.

Table 174—Example of QoS parameters providing scheduling service to support BE data streams

Parameter	Meaning
Maximum Sustained Traffic Rate	Optional. As in 11.13.8
Request/Transmission Policy	As in 11.13.11
If (UL service flow){	
Scheduling Type	BE as in 6.3.5.2.4
}	

6.3.5.1 Outbound transmission scheduling

Outbound transmission scheduling selects the data for transmission in a particular frame/bandwidth allocation and is performed by the BS for DL, and SS for UL. In addition to whatever other factors the scheduler may deem pertinent, the following items are taken into account for each active service flow:

— The scheduling service specified for the service flow.
— The values assigned to the service flow's QoS parameters.
— The availability of data for transmission.
— The capacity of the granted bandwidth.

6.3.5.2 UL request/grant scheduling

UL request/grant scheduling is performed by the BS with the intent of providing each subordinate SS with bandwidth for UL transmissions or opportunities to request bandwidth. By specifying a scheduling type and its associated QoS parameters, the BS scheduler can anticipate the throughput and latency needs of the UL traffic and provide polls and/or grants at the appropriate times.

Table 175 summarizes the scheduling types and the poll/grant options available for each. The service flow scheduling services for UL operations are defined in 6.3.5.2.1 through 6.3.5.2.4.

Table 175—Scheduling services and usage rules

Scheduling type	PiggyBack Request	Bandwidth stealing	Polling
UGS	Not allowed	Not allowed	PM bit is used to request a unicast poll for bandwidth needs of non-UGS connections.
rtPS	Allowed	Allowed	Scheduling only allows unicast polling.
nrtPS	Allowed	Allowed	Scheduling may restrict a service flow to unicast polling via the transmission/request policy; otherwise all forms of polling are allowed.
BE	Allowed	Allowed	All forms of polling allowed.

6.3.5.2.1 Unsolicited grant service (UGS)

The UGS is designed to support real-time uplink service flows that transport fixed-size data packets on a periodic basis, such as T1/E1 and Voice over IP without silence suppression. The service offers fixed-size grants on a real-time periodic basis, which eliminate the overhead and latency of SS requests and assure that grants are available to meet the flow's real-time needs. The BS shall provide Data Grant Burst IEs to the SS at periodic intervals based upon the Minimum Reserved Traffic Rate of the service flow. The size of these grants shall be sufficient to hold the fixed-length data associated with the service flow (with associated generic MAC header and GMSH) but may be larger at the discretion of the BS scheduler. In order for this service to work correctly, the Request/Transmission Policy (see 11.13.11) setting shall be such that the SS is prohibited from using any contention request opportunities for this connection. The mandatory QoS parameters are Minimum Reserved Traffic Rate (11.13.8), Maximum Latency (11.13.13), Tolerated Jitter (11.13.12), Uplink Grant Scheduling Type (11.13.10), SDU size (for fixed length SDU service flows) (11.13.15), Request/Transmission Policy (11.13.11), and Unsolicited Grant Interval (11.13.19). If present, the Minimum Reserved Traffic Rate parameter (11.13.8) shall have the same value as the Maximum Sustained Traffic Rate parameter.

The GMSH (6.3.2.2.2) is used to pass status information from the SS to the BS regarding the state of the UGS service flow. The MSB of the Grant Management field is the SI (slip indicator) bit. The SS shall set this flag once it detects that this service flow has exceeded its Tx queue depth. Once the SS detects that the service flow's Tx queue is back within limits, it shall clear the SI flag. The flag allows the BS to provide for long term compensation for conditions, such as lost maps or clock rate mismatches, by issuing additional grants. The poll-me (PM) bit (6.3.6.3.3) may be used to request to be polled for a different, non-UGS connection.

The BS shall not allocate more bandwidth than the Minimum Reserved Traffic Rate parameter of the active QoS parameter set, excluding the case when the SI bit of the Grant Management field is set. In this case, the BS may grant up to 1% additional bandwidth for clock rate mismatch compensation.

The FL (frame latency) and FLI (frame latency indication) fields may be used to provide the BS with information on the synchronization of the MS application that is generating periodic data for UGS/Extended rtPS service flows.

The MS may use these fields to detect whether latency experienced by this service flow at the MS exceeds a certain limit, e.g., a single frame duration. If the FL indicates inordinate latency, the BS may shift scheduled grants earlier for this service flow (taking into account the Frame Latency, FL).

6.3.5.2.2 Real-time polling service (rtPS)

The rtPS is designed to support real-time UL service flows that transport variable-size data packets on a periodic basis, such as moving pictures experts group (MPEG) video. The service offers real-time, periodic, unicast request opportunities, which meet the flow's real-time needs and allow the SS to specify the size of the desired grant. This service requires more request overhead than UGS, but supports variable grant sizes for optimum data transport efficiency.

The BS shall provide periodic unicast request opportunities. In order for this service to work correctly, the Request/Transmission Policy setting (see 11.13.11) shall be such that the SS is prohibited from using any contention request opportunities for that connection. The BS may issue unicast request opportunities as prescribed by this service even if prior requests are currently unfulfilled. This results in the SS using only unicast request opportunities and data transmission opportunities in order to obtain UL transmission opportunities. All other bits of the Request/Transmission Policy are irrelevant to the fundamental operation of this scheduling service and should be set according to network policy. The mandatory QoS parameters are Minimum Reserved Traffic Rate (11.13.8), Maximum Sustained Traffic Rate (11.13.6), Maximum Latency (11.13.13), Uplink Grant Scheduling Type (11.13.10), Request/Transmission Policy (11.13.11) and Unsolicited Polling Interval (11.13.20).

6.3.5.2.2.1 Extended rtPS

Extended rtPS is a scheduling mechanism which builds on the efficiency of both UGS and rtPS. The BS shall provide unicast grants in an unsolicited manner like in UGS, thus saving the latency of a BR. However, whereas UGS allocations are fixed in size, ertPS allocations are dynamic.

The BS may provide periodic UL allocations that may be used for requesting the bandwidth as well as for data transfer. By default, size of allocations corresponds to current value of Maximum Sustained Traffic Rate at the connection. The MS may request changing the size of the UL allocation either by using an Extended Piggyback Request field of the GMSH or the BR field of the MAC signaling headers as described in Table 7 or by sending a codeword (defined in 8.4.11.13) over CQICH. The BS shall not change the size of UL allocations until receiving another bandwidth change request from the MS. When the BR size is set to zero, the BS may provide allocations for only BR header or no allocations at all. In case that no unicast BR opportunities are available, the MS may use contention request opportunities for that connection, or send the CQICH codeword to inform the BS of its having the data to send. If the BS receives the CQICH codeword,

the BS shall start allocating the UL grant corresponding to the current Maximum Sustained Traffic Rate value.

The mandatory QoS parameters are the Maximum Sustained Traffic Rate, the Minimum Reserved Traffic Rate, the Maximum Latency, the Request/Transmission Policy and Unsolicited Grant Interval (11.13.19).

The Extended rtPS is designed to support real-time service flows that generate variable-size data packets on a periodic basis, such as Voice over IP services with silence suppression.

6.3.5.2.3 Non-real-time polling service (nrtPS)

The nrtPS offers unicast polls on a regular basis, which assures that the UL service flow receives request opportunities even during network congestion. The BS typically polls nrtPS connections on an interval on the order of one second or less.

The BS shall provide timely unicast request opportunities. In order for this service to work correctly, the Request/Transmission Policy setting (see 11.13.11) shall be such that the SS is allowed to use contention request opportunities. This results in the SS using contention request opportunities as well as unicast request opportunities and data transmission opportunities. All other bits of the Request/Transmission Policy are irrelevant to the fundamental operation of this scheduling service and should be set according to network policy. The mandatory QoS parameters for this scheduling service are Minimum Reserved Traffic Rate (11.13.8), Maximum Sustained Traffic Rate (11.13.6), Traffic Priority (11.13.5), Uplink Grant Scheduling Type (11.13.10), and Request/Transmission Policy (11.13.11).

6.3.5.2.4 Best effort (BE) service

The intent of the BE grant scheduling type is to provide efficient service for BE traffic in the UL. In order for this service to work correctly, the Request/Transmission Policy setting shall be set so that the SS is allowed to use contention request opportunities. This results in the SS using contention request opportunities as well as unicast request opportunities and data transmission opportunities. All other bits of the Request/ Transmission Policy are irrelevant to the fundamental operation of this scheduling service and should be set according to network policy.

6.3.6 Bandwidth allocation and request mechanisms

Note that during network entry and initialization every SS is assigned up to three dedicated CIDs for the purpose of sending and receiving management messages. These connection pairs are used to allow differentiated levels of QoS to be applied to the different connections carrying MAC management traffic. Increasing (or decreasing) bandwidth requirements is necessary for all services except UGS connections. The needs of UGS connections do not change between connection establishment and termination.

When an SS needs to ask for bandwidth on a connection with BE scheduling service, it sends a message to the BS containing the immediate requirements of the connection. QoS for the connection was established at the connection setup and is looked up by the BS.

6.3.6.1 Requests

Requests refer to the mechanism that SSs use to indicate to the BS that they need UL bandwidth allocation. A Request may come as a stand-alone BR header or it may come as a PiggyBack Request (e.g., Grant management subheader, see 6.3.2.2.2). The use of Grant management subheader is optional.

Because the UL burst profile can change dynamically, all requests for bandwidth shall be made in terms of the number of bytes needed to carry the MAC PDU excluding PHY overhead. The BR message may be

transmitted during any UL allocation, except during any initial ranging interval. An SS shall not request bandwidth for a connection if it has no PDU to transmit on that connection.

BRs may be incremental or aggregate. When the BS receives an incremental BR, it shall add the quantity of bandwidth requested to its current perception of the bandwidth needs of the connection. When the BS receives an aggregate BR, it shall replace its perception of the bandwidth needs of the connection with the quantity of bandwidth requested. The Type field in the BR header indicates whether the request is incremental or aggregate. Since Piggybacked BRs do not have a type field, Piggybacked BRs shall always be incremental. The self-correcting nature of the request/grant protocol requires that SSs may periodically use aggregate BRs as a function of the QoS of a service and of the link quality. Due to the possibility of collisions, contention-based BRs shall be aggregate requests except in the OFDMA PHY. In the OFDMA PHY, the SS may respond to the CDMA Allocation IE with either aggregate or incremental BR.

Additional BR mechanisms include the focused BRs (see 6.3.6.4) and CDMA BRs (see 6.3.6.5).

Capability of incremental BRs is optional for the SS and mandatory for the BS. Capability of aggregate BRs is mandatory for SS and BS.

In OFDMA, the bandwidth request is to be interpreted by the BS as the amount of data that the SS requires for a connection after the SS has sent the data that is in the current burst.

6.3.6.2 Grants

For an SS, BRs reference individual connections while each unicast bandwidth grant is addressed to the SS's Basic CID, not to individual CIDs. Since it is nondeterministic which request is being honored, when the SS receives a shorter transmission opportunity than expected (scheduler decision, request message lost, etc.), no explicit reason is given. In all cases, based on the latest information received from the BS and the status of the request, the SS may decide to perform backoff and send a new request.

For the SC and OFDM PHY, an SS may use multicast or broadcast grants to transmit a bandwidth request.

6.3.6.3 Polling

To poll an SS, the BS allocates, in the UL-MAP, bandwidth sufficient to respond with a BR. These allocations may be to individual SSs (all PHYs) or to groups of SSs (OFDM and SC only). The allocations are contained as a series of IEs within the UL-MAP.

Note that polling is done on SS basis. Bandwidth is always requested on a CID basis and bandwidth is allocated on an SS basis.

6.3.6.3.1 Unicast polling

When an SS is polled individually, the BS allocates, in the UL-MAP, sufficient bandwidth for the SS to respond with a BR. If the SS does not need bandwidth, the allocation may be padded in accordance with 6.3.3.7 else the SS may transmit a request for zero bandwidth. SSs that have an active UGS connection shall not be polled individually unless they set the PM bit in the GMSH of a MAC PDU on the UGS connection. This saves bandwidth over repetitive polling of the SSs.

The information exchange sequence for individual polling is shown in Figure 53.

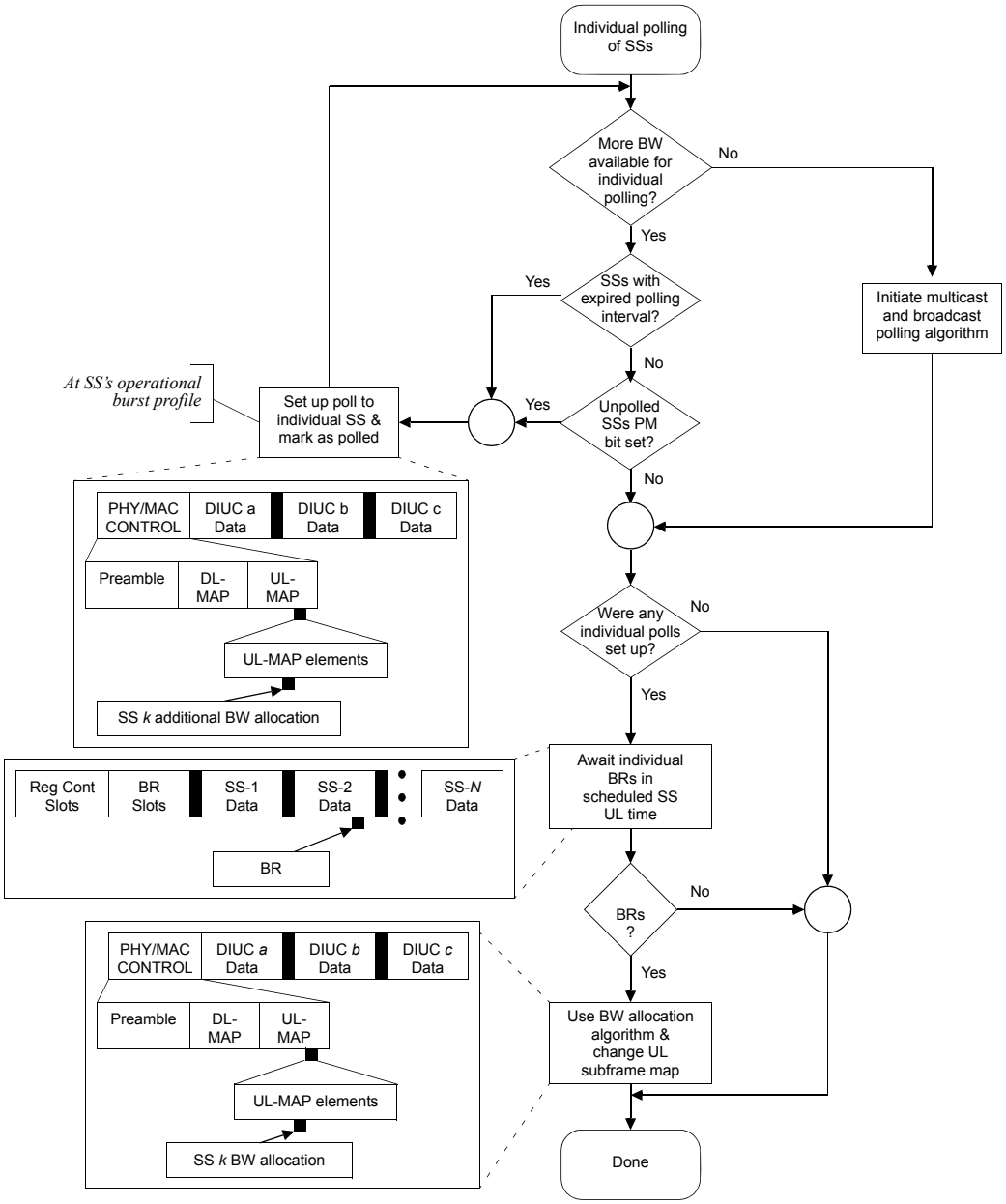

Figure 53—Example of Unicast polling

6.3.6.3.2 Multicast and broadcast polling

This subclause applies to the SC and OFDM PHY.

If insufficient bandwidth is available to individually poll many inactive SSs, some SSs may be polled in multicast groups or a broadcast poll may be issued. Certain CIDs are reserved for multicast groups and for broadcast messages, as described in Table 558. As with individual polling, the poll is not an explicit message, but bandwidth allocated in the UL-MAP. The difference is that, rather than associating allocated bandwidth with an SS's Basic CID, the allocation is to a multicast or Broadcast CID. An example is provided in Table 176.

Table 176—Sample UL-MAP with multicast and broadcast IE for SC

Interval description	UL-MAP IE fields		
	CID (16 bits)	UIUC (4 bits)	Offset (12 bits)
Initial ranging	0000	2	0
Multicast group 0xFFC5 BR	0xFFC5	1	405
Multicast group 0xFFDA BR	0xFFDA	1	605
Broadcast BR	0xFFFF	1	805
SS 5 UL grant	0x007B	4	961
SS 21 UL grant	0x01C9	7	1136

The information exchange sequence for multicast and broadcast polling is shown in Figure 54.

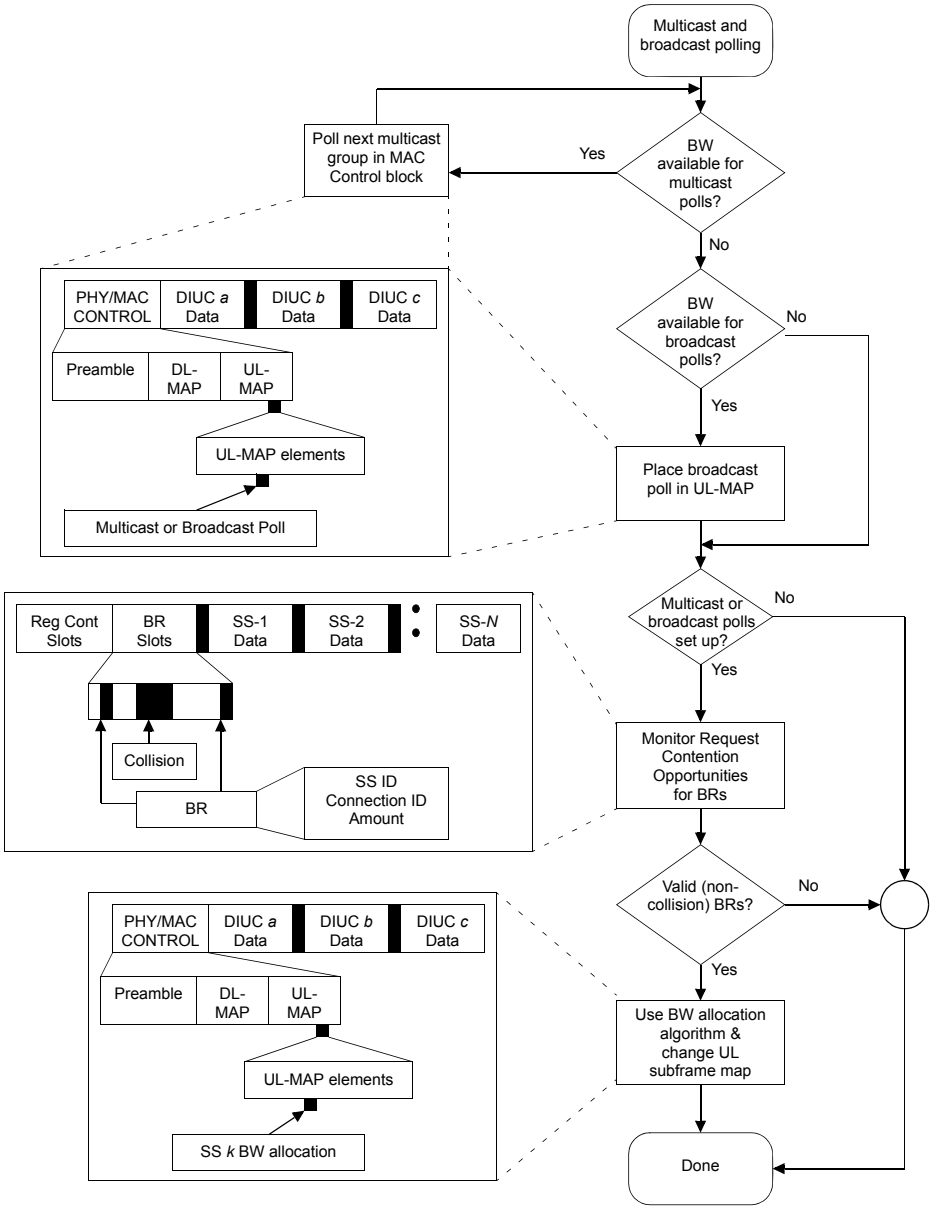

Figure 54—Multicast and broadcast polling

When the poll is directed at a multicast or Broadcast CID, an SS belonging to the polled group may request bandwidth during any request interval allocated to that CID in the UL-MAP by a Request IE. In order to reduce the likelihood of collision with multicast and broadcast polling, only SS's needing bandwidth reply; they shall apply the contention resolution algorithm as defined in 6.3.8 to select the slot in which to transmit the initial BR. Zero-length BRs shall not be used in multicast or broadcast request intervals.

The SS shall assume that the transmission has been unsuccessful if no grant has been received in the number of subsequent UL-MAP messages specified by the parameter Contention-based reservation timeout (see

11.3.1). Note that, with a frame-based PHY with UL-MAPs occurring at predetermined instants, erroneous UL-MAPs may be counted towards this number. If the rerequest is made in a multicast or broadcast opportunity, the SS continues to run the contention resolution algorithm in 6.3.8. Note that the SS is not restricted to issuing the rerequest in a multicast or broadcast request interval.

6.3.6.3.3 PM bit

SSs with currently active UGS connections may set the PM bit [bit PM in the GMSH (6.3.2.2.2)] in a MAC packet of the UGS connection to indicate to the BS that they need to be polled to request bandwidth for non-UGS connections. To reduce the bandwidth requirements of individual polling, SSs with active UGS connections need be individually polled only if the PM bit is set (or if the interval of the UGS is too long to satisfy the QoS of the SS's other connections). Once the BS detects this request for polling, the process for individual polling is used to satisfy the request. The procedure by which an SS stimulates the BS to poll it is shown in Figure 55. To minimize the risk of the BS missing the PM bit, the SS may set the bit in all UGS MAC GMSHs in the UL scheduling interval.

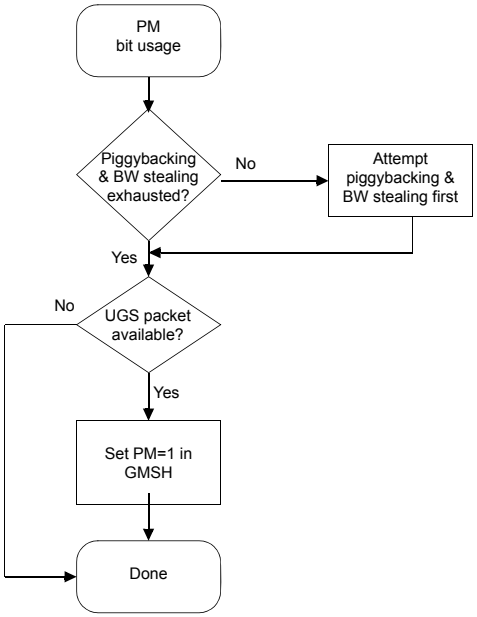

Figure 55—PM bit usage

6.3.6.4 Contention-based focused BRs for WirelessMAN-OFDM

The WirelessMAN-OFDM PHY supports two contention-based BR mechanisms. The mandatory mechanism allows the SS to send the BR header as specified in 6.3.6.1 during a REQ Region-Full. Alternatively, the SS may send a Focused Contention Transmission during a REQ Region-Focused. This transmission consists of a contention code modulated on a contention channel consisting of four carriers. The selection of the contention code is done with equal probability among the eight possible codes. The selection of the contention channel is done with equal probability among the time/frequency Tx opportunities applicable to the SS. Upon detection, the BS shall provide an UL allocation for the SS to transmit a BR MAC PDU and optionally additional data, but instead of indicating a Basic CID, the Broadcast CID shall be sent in combination with an OFDM Focused Contention IE, which specifies the contention channel, contention code, and Tx opportunity that were used by the SS. This allows an SS to determine whether it has been given an allocation by matching these parameters with the parameters it used. See also 8.3.7.3.3.

6.3.6.5 Contention-based CDMA BRs for WirelessMAN-OFDMA

The WirelessMAN-OFDMA PHY supports two mandatory BR mechanisms: the SS shall either send the BR header as specified in 6.3.6.1, or use the CDMA-based contention mechanism as specified in the following paragraphs of this subclause.

As specified in 6.3.10.3, the OFDMA PHY specifies a ranging subchannel and a subset of ranging codes that shall be used for contention-based BRs. The SS, upon needing to request bandwidth, shall select, with equal probability, a ranging code from the code subset allocated to BRs. This ranging code shall be modulated onto the ranging subchannel and transmitted during a Ranging Slot randomly selected from the appropriate ranging region in a single frame.

Upon detection, the BS shall provide an UL allocation for the SS using Broadcast CID in combination with a CDMA Allocation IE, which specifies the Tx region and ranging code that were used by the SS for transmission of the CDMA code. This allows an SS to determine whether it has been given an allocation by matching these parameters with the parameters it used. The SS shall use the allocation to transmit a Bandwidth request header or another header containing a BR field except when the BS indicated the header can be omitted in the CDMA Allocation IE (see Table 379). The SS may also transmit data in this allocation.

If the BS does not issue the CDMA allocation IE as described above, or the BR MAC PDU does not result in a subsequent allocation of any bandwidth, the SS shall assume that the ranging code transmission resulted in a collision and follow the contention resolution as specified in 6.3.8.

6.3.7 MAC support of PHY

Several duplexing techniques are supported by the MAC protocol. The choice of duplexing technique may affect certain PHY parameters as well as impact the features that can be supported.

6.3.7.1 Frequency division duplexing (FDD)

In an FDD system, the UL and DL channels are located on separate frequencies and the DL data can be transmitted in bursts. A fixed duration frame is used for both UL and DL transmissions. This facilitates the use of different modulation types. It also allows simultaneous use of both full-duplex SSs (which can transmit and receive simultaneously) and optionally half-duplex SSs (which cannot). If half-duplex SSs are used, the bandwidth controller shall not allocate UL bandwidth for a half-duplex SS at the same time that it is expected to receive data on the DL channel, including allowance for the propagation delay, SS transmit/receive transition gap (SSTTG) and SS receive/transmit transition gap (SSRTG).

Figure 56 describes the basics of the FDD mode of operation. The fact that the UL and DL channels utilize a fixed duration frame simplifies the bandwidth allocation algorithms. A full-duplex SS is capable of continuously listening to the DL channel, while a half-duplex SS can listen to the DL channel only when it is not transmitting in the UL channel.

6.3.7.2 Time division duplexing (TDD)

In the case of TDD, the UL and DL transmissions occur at different times and usually share the same frequency. A TDD frame (see Figure 57) has a fixed duration and contains one DL and one UL subframe. The frame is divided into an integer number of PSs, which help to partition the bandwidth easily. The TDD framing is adaptive in that the bandwidth allocated to the DL versus the UL can vary. The split between UL and DL is a system parameter and is controlled at higher layers within the system.

6.3.7.3 DL-MAP message

The DL-MAP message defines the usage of the DL intervals for a burst mode PHY.

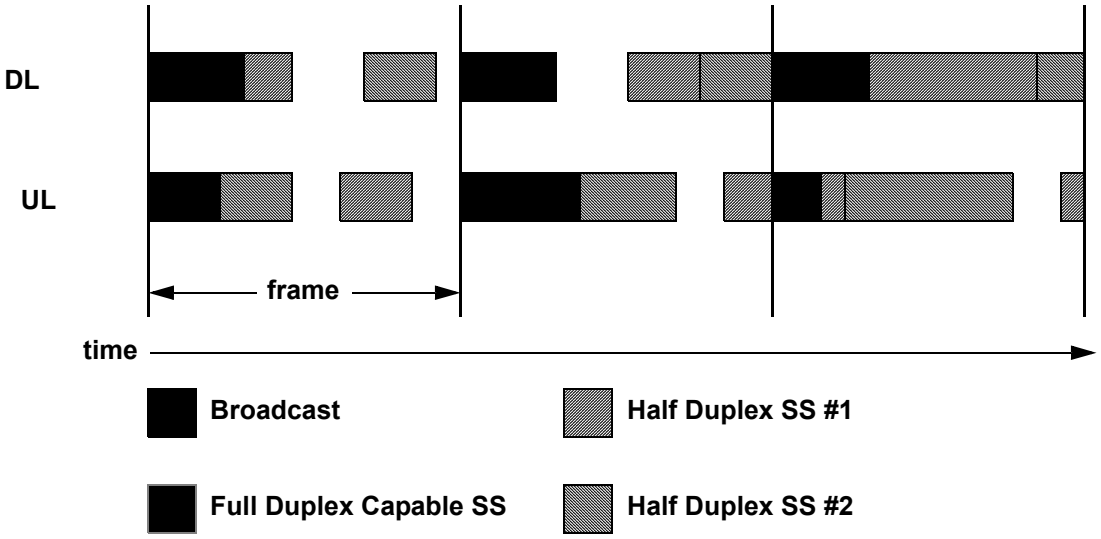

Figure 56—Example of burst FDD bandwidth allocation

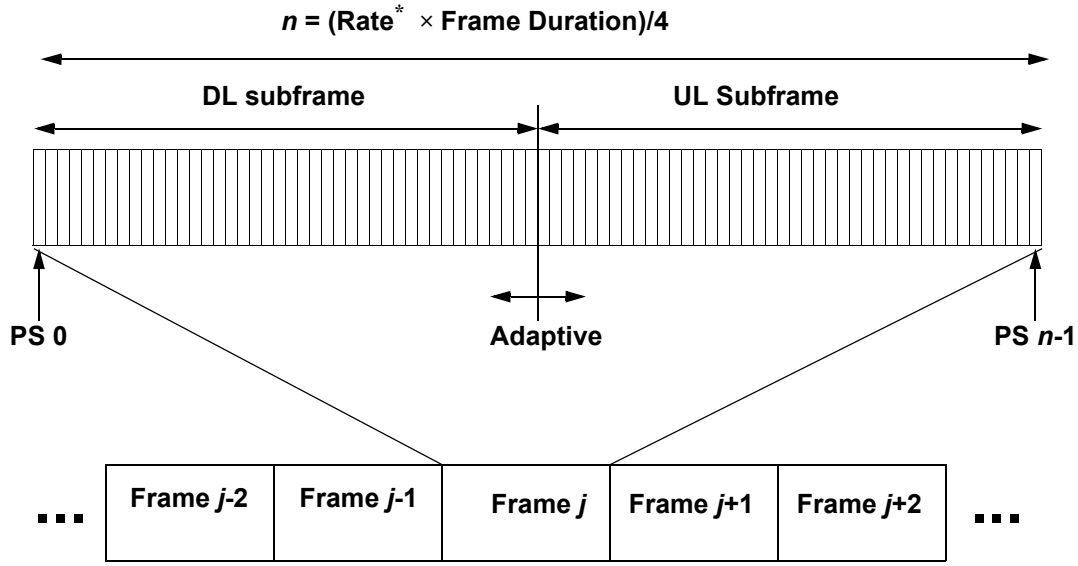

[*] for SC, the Rate is the Symbol Rate; for OFDM, OFDMA, the Rate is the nominal sampling frequency (Fs).

Figure 57—TDD frame structure

6.3.7.4 UL-MAP message

The UL-MAP message defines the UL usage in terms of the offset of the burst relative to the Allocation Start Time (units PHY-specific).

6.3.7.4.1 UL timing

UL timing is referenced from the beginning of the DL subframe. The Allocation Start Time in the UL-MAP is referenced from the start of the DL subframe and may be such that the UL-MAP references some point in the current or a future frame (see 6.3.7.5). The SS shall always adjust its concept of UL timing based upon the Timing Adjustments sent in the RNG-RSP messages.

6.3.7.4.2 UL allocations

For the SC PHY, the UL bandwidth allocation map (UL-MAP) uses units of minislots. The size of the minislot is specified as a function of PSs and is carried in the UCD for each UL channel.

For the OFDM and OFDMA PHYs, the UL bandwidth allocation map (UL-MAP) uses units of symbols and subchannels.

6.3.7.4.3 UL interval definition

All of the IEs defined in 6.3.7.4.3.1 through 6.3.7.4.3.5 shall be supported by conformant SSs. Conformant BS may use any of these IEs when creating a UL-MAP message.

6.3.7.4.3.1 Request IE

Via the Request IE, the BS specifies an UL interval in which requests may be made for bandwidth for UL data transmission. The character of this IE changes depending on the type of CID used in the IE. If broadcast or multicast, this is an invitation for SSs to contend for requests. If unicast, this is an invitation for a particular SS to request bandwidth. Unicasts may be used as part of a QoS scheduling scheme that is vendor dependent. For any UL allocation, the SS may optionally decide to use the allocation for data or requests (or requests piggybacked in data). PDUs transmitted in this interval shall use the BR header format (see 6.3.2).

For BR contention opportunities, the BS shall allocate a grant that is an integer multiple of the value of "Bandwidth request opportunity size," which shall be published in each UCD transmission.

This subclause does not apply to the OFDMA PHY.

6.3.7.4.3.2 Initial Ranging IE

Via the Initial Ranging IE, the BS specifies an interval in which new stations may join the network. An interval, equivalent to the maximum round-trip propagation delay plus the transmission time of the RNG-REQ message, shall be provided in some UL-MAPs to allow new stations to perform initial ranging. Packets transmitted in this interval shall use the RNG-REQ MAC management message format (see 6.3.2.3.5).

For ranging contention opportunities, the BS shall allocate a grant that is an integer multiple of the value of "Ranging request opportunity size," which shall be published in each UCD transmission.

This subclause does not apply to the OFDMA PHY, in which CDMA-based ranging is used, as described in 6.3.10.3.

6.3.7.4.3.3 Data Grant Burst Type IEs

The Data Grant Burst Type IEs provide an opportunity for an SS to transmit one or more UL PDUs. These IEs are issued either in response to a request from a station, or because of an administrative policy, such as unicast polling, providing some amount of bandwidth to a particular station.

The number of Data Grant Burst Types available is PHY-specific. Each Data Grant Burst Type description is defined in the UCD message.

6.3.7.4.3.4 End Of Map IE

An End Of Map IE terminates all actual allocations in the IE list. It is used to determine the length of the last interval.

This IE is not used in OFDMA PHY.

6.3.7.4.3.5 Gap IE

The Gap IE indicates pauses in UL transmissions. An SS shall not transmit during a Gap IE.

6.3.7.5 Map relevance and synchronization

Timing information in the DL-MAP and UL-MAP is relative. The following time instants are used as a reference for timing information:

— DL-MAP: The start of the first symbol (including the preamble if present) of the frame in which the message was transmitted.
— UL-MAP: The start of the first symbol (including the preamble if present) of the frame in which the message was transmitted plus the value of the Allocation Start Time.

Information in the DL-MAP pertains to the current frame (the frame in which the message was received). Information carried in the UL-MAP pertains to a time interval starting at the Allocation Start Time measured from the beginning of the current frame and ending after the last specified allocation. For the OFDM PHY with an UL-MAP sent in AAS zone, the allocation start time shall be measured from the start of the AAS zone in which the UL MAP was sent. This timing holds for both the TDD and FDD variants of operation. The TDD variant is shown in Figure 58 and Figure 59. The FDD variant is shown in Figure 60 and Figure 61.

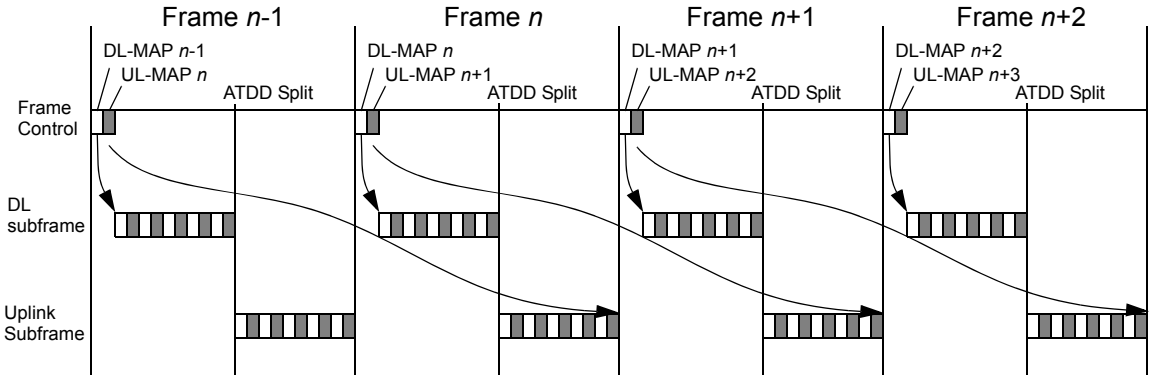

Figure 58—Maximum time relevance of DL-MAP and UL-MAP (TDD)

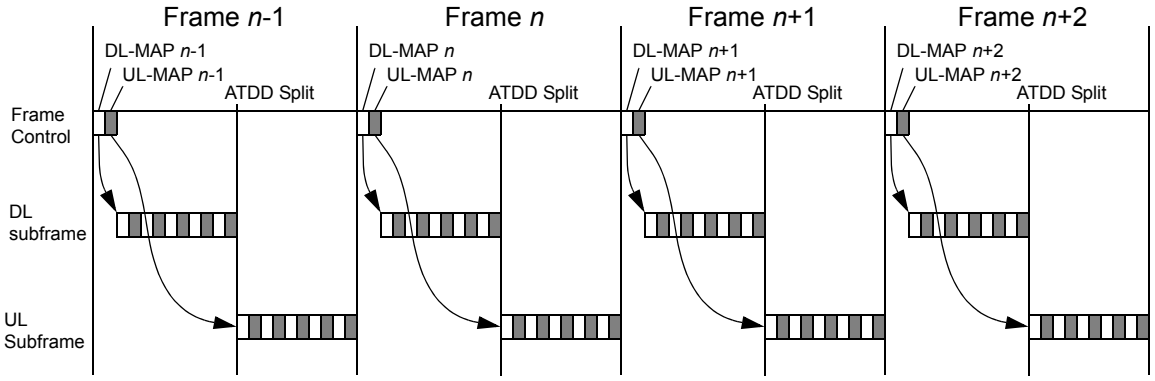

Figure 59—Minimum time relevance of DL-MAP and UL-MAP (TDD)

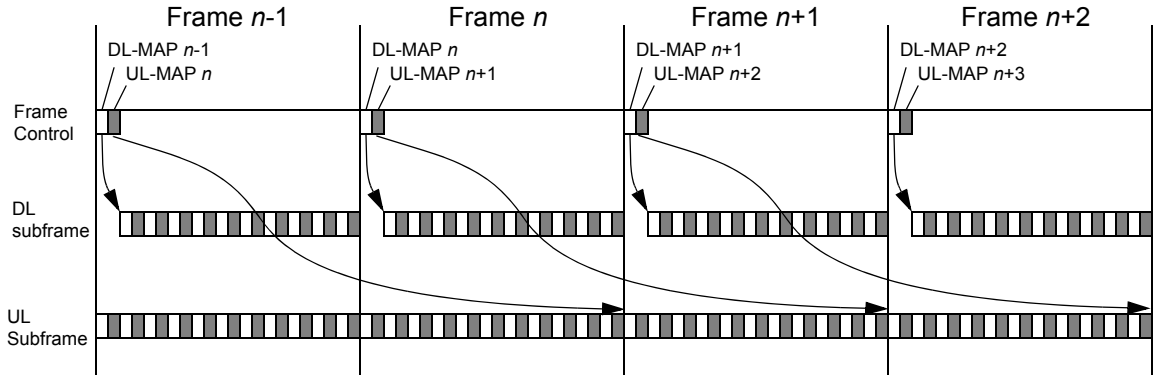

Figure 60—Maximum time relevance of DL-MAP and UL-MAP (FDD)

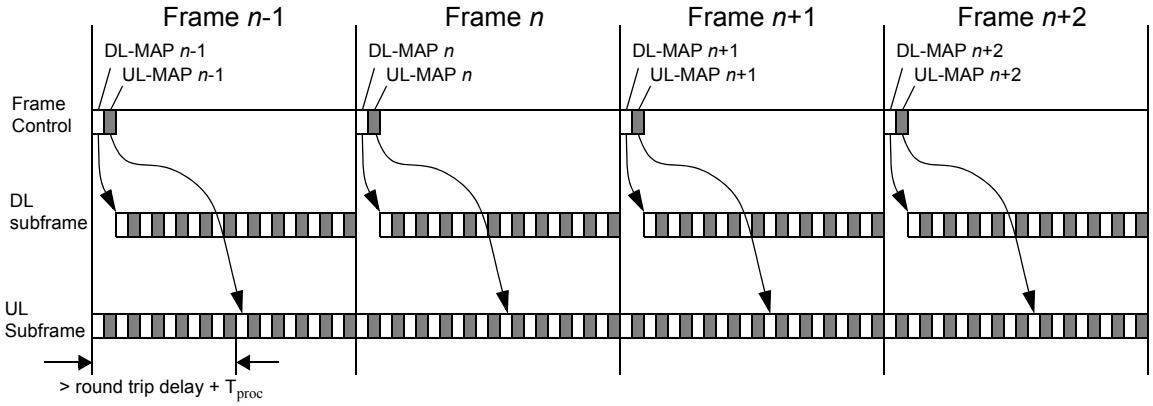

Figure 61—Minimum time relevance of DL-MAP and UL-MAP (FDD)

6.3.7.5.1 WirelessMAN-SC PHY

Allocation Start Time shall be subject to the following limitations: For FDD, the minimum Allocation Start Time value shall be the round trip delay + $T_{proc,}$ and the maximum Allocation Start Time value is T_f (i.e., the beginning of the next frame). For TDD, the Allocation Start Time value shall be either the ATDD split or the ATDD split + T_f. The allocation shall be within a single frame.

6.3.7.5.2 WirelessMAN-OFDM PHY

Allocation Start Time shall be subject to the following limitations:

— For FDD, the minimum Allocation Start Time value shall be the round trip delay + $T_{proc,}$ and the maximum Allocation Start Time value is T_f (i.e., the beginning of the next frame).

— For TDD, the Allocation Start Time value shall be either the ATDD split or the ATDD split + T_f, and the allocation shall be within a single frame. The allocation start time shall be no smaller than the round trip delay + T_{proc}.

6.3.7.5.3 WirelessMAN-OFDMA PHY

Allocation Start Time shall be subject to the following limitations:

— Minimum value: Allocation Start Time $\geq T_f$
— Maximum value: Allocation Start Time $< 2 \times T_f$

In the UL subframe for which the MS fails to receive the relevant UL MAP, the MS shall not send data bursts or control signals (including CDMA ranging, CQICH, HARQ ACK/NAK, or sounding signals).

6.3.7.6 Optional MAC AAS support of OFDM and OFDMA

6.3.7.6.1 AAS MAC services

AAS (see Cantoni and Godara [B4], Johnson and Dudgeon [B37], Liberti and Rappaport [B38], and Branlund [B3] for generic literature), through the use of more than one antenna element, can improve range and system capacity by adapting the antenna pattern and concentrating its radiation to each individual subscriber. The spectral efficiency can be increased linearly with the number of antenna elements. This is achieved by steering beams to multiple users simultaneously to realize an inter-cell frequency reuse of one and an in-cell reuse factor proportional to the number of antenna elements. An additional benefit is the signal-to-noise ratio (SNR) gain realized by coherently combining multiple signals, and the ability to direct this gain to particular users. Another possible benefit is the reduction in interference achieved by steering nulls in the direction of co-channel interferers. Combining the benefits of increasing the SNR of certain subscribers and steering nulls to others, enables bursts to be concurrently transmitted to spatially separated SSs. For the UL direction the same principle can be applied in a reciprocal fashion. A concurrent transmission of bursts does not necessarily increase the system's range but may enhance system capacity.

Support mechanisms for AAS are specified, which allow a system to deliver the benefits of adaptive arrays while maintaining compatibility for non-AAS SSs.

The design of the AAS option provides a mechanism to migrate from a non-AAS system to an AAS-enabled system in which the initial replacement of the non-AAS capable BS by an AAS capable BS should cause the only service interruption to (non-AAS) SSs.

This is achieved by dedicating part of the frame to non-AAS traffic and part to AAS traffic. The allocation is performed dynamically by the BS. Non-AAS SSs shall ignore AAS traffic, which they can identify based on the DL-MAP/UL-MAP messages.

For SC and OFDM systems, the AAS part of the DL frame begins with an AAS-specific preamble (see Figure 62 and Figure 63). Note that this DL preamble does not apply to the OFDMA PHY.

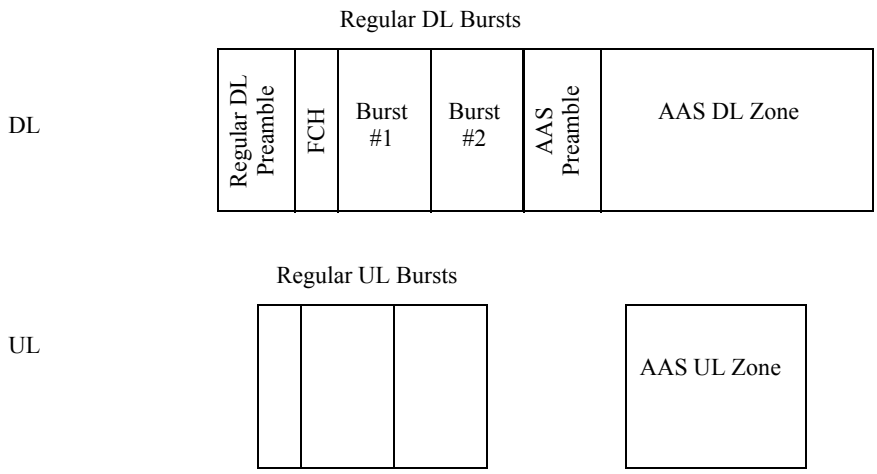

Figure 62—AAS zone, FDD

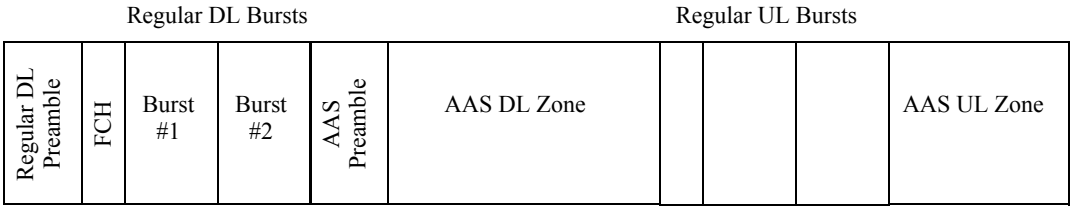

Figure 63—AAS zone, TDD

For BR/allocation, AAS-enabled SSs may use dedicated private DL-MAP/UL-MAP messages as well as tools specific for AAS (see specific PHY subclauses), which can be used to facilitate avoidance of collisions with non-AAS traffic.

Special considerations apply to those parts of the frame that are not scheduled, e.g., initial ranging and BR, as discussed in 6.3.7.6.3 and 6.3.7.6.6.

6.3.7.6.2 MAC control functions

The control of the AAS part of the frame may be done by unicasting private management messages to individual SSs. These messages shall be the same as the broadcast management messages, except that the Basic CID assigned to the SS is used instead of the Broadcast CID.

If AAS-enabled SSs can decode the broadcast DL-MAP and DCD messages, the BS may specify concurrent bursts by means of the extended concurrent transmission IE format as described in 8.3.6.2.6.

6.3.7.6.3 AAS DL synchronization

When the SS first attempts to synchronize to the DL transmission, the BS is unaware of its presence, and therefore is not aiming the adaptive array at its direction. Nevertheless, the frame start preamble is a repetitive well-known pattern, and SS may utilize the inherent processing gain associated with it in order to synchronize timing and frequency parameters with the BS. The BS may further employ active scanning or diversity methods to speed up and enhance the process of DL synchronization. These methods are PHY-specific, and described in the respective PHY section.

6.3.7.6.4 Alerting the BS about presence of a new SS in an AAS system

In a non-AAS system, after synchronizing to the DL, an SS attempts to obtain the DL parameters by decoding the DL-MAP and DCD messages. In an AAS system, an SS may be able to obtain the DL parameters if it receives the broadcast channel with enough energy so it can decode the DL-MAP and DCD messages. If this is the case, the SS can continue with the network entry process just like the non-AAS case, and the BS will get the chance to tune the adaptive array to it during the ranging process.

Alternatively, for SC and OFDM systems, an AAS SS may use the following procedure to alert the BS to its presence, so the BS can adapt its antenna array to the SS position.

An AAS BS may reserve a fixed, predefined part of the frame as initial ranging contention slots for this alert procedure. The number of contention slots and their location in the frame is PHY-specific (see 8.3.7.2, 8.4.4.1, respectively). These contention slots shall be called AAS-alert-slots.

When an AAS SS has synchronized to the DL, yet is unable to obtain the DL parameters because it cannot decode the DL-MAP and DCD messages, it shall attempt initial ranging on the AAS-alert-slots. Unlike usual initial ranging, the SS shall use all available contention slots, in order to allow the BS adaptive array enough time and processing gain to shape the beam for it. After such an attempt the SS shall wait for a transmission containing DL-MAP and DCD messages from the BS, and shall continue the network entry process like a non-AAS SS.

If the DL-MAP and DCD messages fail to arrive, the SS shall use an exponential backoff algorithm for selecting the next frame in which to attempt alerting the BS to its presence. The algorithm shall be the same as that used for initial ranging by non-AAS stations (see 6.3.8).

6.3.7.6.5 FDD/TDD support

Adaptive Arrays use channel state information in the PHY at both DL and UL. When channel state of the DL is required at the BS, there are two ways to obtain it:

— By relying on reciprocity, thus using the UL channel state estimation as the DL channel state.
— By using feedback, thus transmitting the estimated channel state from the SS to BS.

The first method is simpler and is well suited for TDD systems. The second method is more suitable for FDD systems, where reciprocity does not apply (due to the large frequency separation between UL and DL channels). The second method may also be used for TDD systems.

Channel state information is obtained by using two MAC control messages: AAS-FBCK-REQ and AAS-FBCK-RSP (see 6.3.2.3.35). The request instructs the SS to measure, the results of which shall be returned in the response after the measurement period has ended. The BS shall provide an UL allocation to enable the SS to transmit this response. Using FDD, the BS shall issue AAS-FBCK-REQ messages. Using TDD, the BS may issue AAS-FBCK messages.

6.3.7.6.6 Requesting bandwidth

AAS subscribers might not be able to request bandwidth using the usual contention mechanism. This happens because the adaptive array may not have a beam directed at the SS when it is requesting bandwidth, and the BR will be lost. In order to avoid this situation, an AAS SS is directed by the BS about whether it may use broadcast allocations for requesting bandwidth. The BS may change its direction dynamically using the AAS broadcast permission TLV, which is carried by the RNG-RSP message. The SS shall signify by using the AAS broadcast capability TLV in the RNG-REQ message whether it can receive the broadcast messages.

When an SS is directed not to use the Broadcast CID to request bandwidth, it is the responsibility of the BS to provide a polling mechanism to learn about the SS bandwidth requirements.

6.3.8 Contention resolution

The BS controls assignments on the UL channel through the UL-MAP messages and determines which minislots are subject to collisions. Collisions may occur during initial ranging and request intervals defined by their respective IEs. The potential occurrence of collisions in request intervals is dependent on the CID in the respective IE. This subclause describes UL transmission and contention resolution. For simplicity, it refers to the decisions an SS makes. Since an SS can have multiple UL service flows (each with its own CID), it makes these decisions on a per CID or per service QoS basis.

The mandatory method of contention resolution that shall be supported is based on a truncated binary exponential backoff, with the initial backoff window and the maximum backoff window controlled by the BS. The values are specified as part of the UCD message and represent a power-of-two value. For example, a value of 4 indicates a window between 0 and 15; a value of 10 indicates a window between 0 and 1023.

When an SS has information to send and wants to enter the contention resolution process, it sets its internal backoff window equal to the request (or ranging for initial ranging) backoff start defined in the UCD message referenced by the UCD Count in the UL-MAP message currently in effect.[15]

The SS shall randomly select a number within its backoff window. This random value indicates the number of contention transmission opportunities that the SS shall defer before transmitting. An SS shall consider only contention transmission opportunities for which this transmission would have been eligible. These are defined by Request IEs (or Initial Ranging IEs for initial ranging) in the UL-MAP messages. Note that each IE may consist of multiple contention transmission opportunities.

Using BRs as an example, consider an SS whose initial backoff window is 0 to 15 and assume it randomly selects the number 11. The SS shall defer a total of 11 contention transmission opportunities. If the first available Request IE is for 6 requests, the SS does not use this and has 5 more opportunities to defer. If the next Request IE is for 2 requests, the SS has 3 more to defer. If the third Request IE is for 8 requests, the SS transmits on the fourth opportunity, after deferring for 3 more opportunities.

After a contention transmission, the SS waits for a Data Grant Burst Type IE in a subsequent map (or waits for a RNG-RSP message for initial ranging). Once received, the contention resolution is complete.

The SS shall consider the contention transmission lost if no data grant has been received in the number of subsequent UL-MAP messages specified by the Contention-Based Reservation Timeout parameter (or no response within T3 for initial ranging). The SS shall now increase its backoff window by a factor of two, as long as it is less than the maximum backoff window. The SS shall randomly select a number within its new backoff window and repeat the deferring process described above.

[15]The map currently in effect is the map whose allocation start time has occurred but which includes IEs that have not occurred.

This retry process continues until the maximum number (i.e., request retries for BRs and contention ranging retries for initial ranging) of retries has been reached. At this time, for BRs, the PDU shall be discarded. For initial ranging, proper actions are specified in 6.3.9.5. Note that the maximum number of retries is independent of the initial and maximum backoff windows that are defined by the BS.

For BRs, if the SS receives a unicast Request IE or Data Grant Burst Type IE at any time while deferring for this CID, it shall stop the contention resolution process and use the explicit transmission opportunity.

The BS has much flexibility in controlling the contention resolution. At one extreme, the BS may choose to set up the request (or ranging) backoff start and request (or ranging) backoff end to emulate an Ethernet-style backoff with its associated simplicity and distributed nature as well as its fairness and efficiency issues. This would be done by setting request (or ranging) backoff start = 0 and request (or ranging) backoff end = 10 in the UCD message. At the other end, the BS may make the request (or ranging) backoff start and request (or ranging) backoff end identical and frequently update these values in the UCD message so that all SS are using the same, and hopefully optimal, backoff window.

6.3.8.1 Transmission opportunities

A transmission opportunity is defined as an allocation provided in a UL-MAP or part thereof intended for a group of SSs authorized to transmit BRs or initial ranging requests. This group may include either all SSs having an intention to join the cell or all registered SSs or a multicast polling group. The number of transmission opportunities associated with a particular IE in a map is dependent on the total size of the allocation as well as the size of an individual transmission.

The size of an individual transmission opportunity for each type of contention IE shall be published in each transmitted UCD message. The BS shall always allocate bandwidth for contention IEs in integer multiples of these published values.

As an example, consider contention-based BRs for a WirelessMAN-SC system where the PHY protocol has a frame duration of 1 ms, 4 symbols for each PS, 2 PSs for each minislot, an UL preamble of 16 symbols (i.e., 2 minislots), and an SS transition gap (SSTG) of 24 symbols (i.e., 3 minislots). Thus, assuming quadrature phase-shift keying (QPSK) modulation, each transmission opportunity requires 8 minislots: 3 for the SSTG, 2 for the preamble, and 3 for the BR message. This payload requirement would be specified as a value of 16 assigned to the UCD TLV “Bandwidth request opportunity size.”

If the BS schedules a Request IE of, for example, 24 minislots, there will be three transmission opportunities within this IE. Details of the three transmission opportunities are shown in Figure 64.

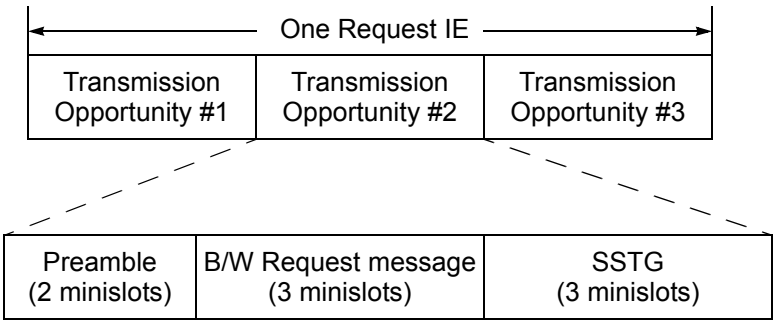

Figure 64—Example of Request IE containing multiple transmission opportunities

6.3.9 Network entry and initialization

Systems shall support the applicable procedures for entering and registering a new SS or a new node to the network. All network entry procedures described hereunder through and including 6.3.9.13 apply only to PMP operation.

The procedure for initialization of an SS shall be as shown in Figure 65. This figure shows the overall flow between the stages of initialization in an SS. This shows no error paths and is shown simply to provide an overview of the process. The more detailed finite state machine representations of the individual sections (including error paths) are shown in the subsequent figures. Timeout values are defined in 10.1.

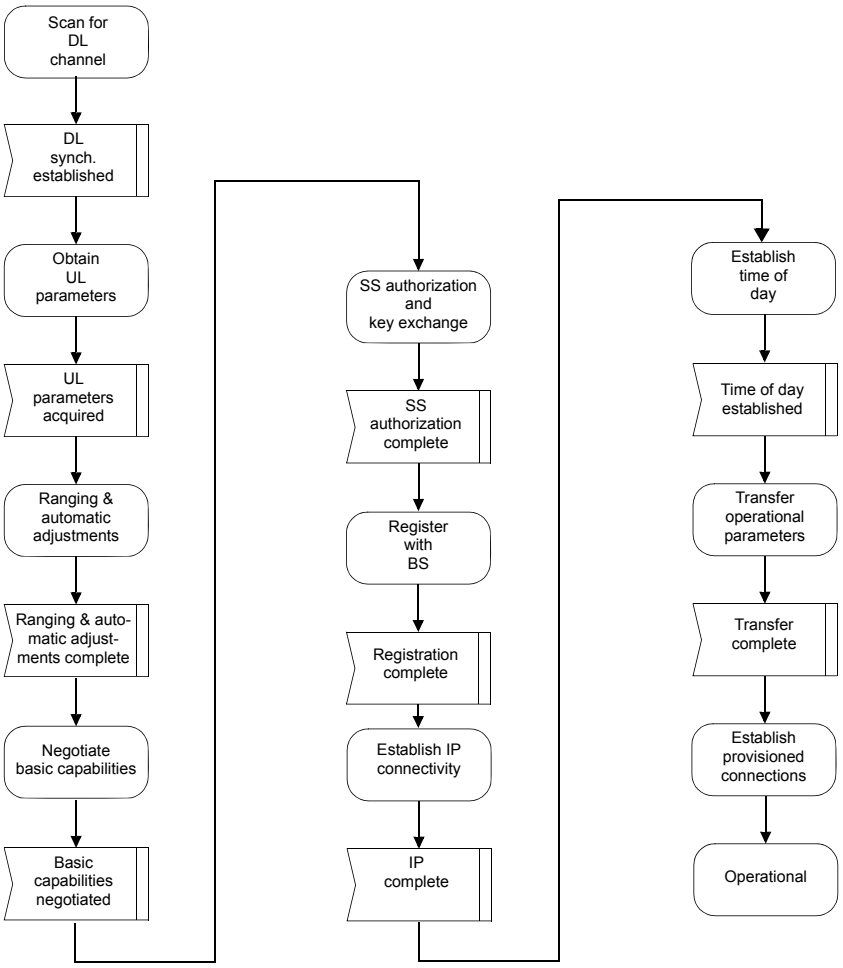

Figure 65—SS initialization overview

The procedure can be divided into the following phases:

a) Scan for DL channel and establish synchronization with the BS
b) Obtain Tx parameters (from UCD message)
c) Perform ranging

d) Negotiate basic capabilities
e) Authorize SS and perform key exchange
f) Perform registration
g) Establish IP connectivity
h) Establish time of day
i) Transfer operational parameters
j) Set up connections

Implementation of phase e) is optional. This phase shall be performed if both SS and BS support Authorization Policy. Implementation of phases g), h), and i) at the SS is optional. These phases shall only be performed if the SS has indicated in the REG-REQ message that it is a managed SS.

Each SS contains the following information when shipped from the manufacturer:

— A 48-bit universal MAC address (per IEEE Std 802) assigned during the manufacturing process. This is used to identify the SS to the various provisioning servers during initialization.
— Security information as defined in Clause 7 (e.g., X.509 certificate) used to authenticate the SS to the security server and authenticate the responses from the security and provisioning servers.

6.3.9.1 Scanning and synchronization to the DL

On initialization or after signal loss, the SS shall acquire a DL channel. The SS shall have nonvolatile storage in which the last operational parameters are stored and may first try to reacquire this DL channel. If this fails, it shall begin to scan the possible channels of the DL frequency band of operation until it finds a valid DL signal.

Once the PHY has achieved synchronization, as given by a PHY Indication, the MAC shall attempt to acquire the channel control parameters for the DL and then the UL.

6.3.9.2 Obtain DL parameters

The MAC shall search for the DL-MAP MAC management messages. The SS achieves MAC synchronization once it has received at least one DL-MAP message and has acquired the DL-Burst Profiles information. An SS MAC remains in synchronization as long as it continues to successfully receive the DL-MAP and DCD messages for its Channel. An MS may use information received in the DCD or MOB_NBR-ADV messages, such as the Available DL Radio Resources and Cell Type (11.4.1), to determine whether the channel is suitable for its intended use and whether it should continue scanning for other channels. If the Lost DL-MAP Interval (Table 554) has elapsed without a valid DL-MAP message or the T1 interval (Table 554) has elapsed without a valid DCD message, an SS shall try to reestablish synchronization. The process of acquiring synchronization is illustrated in Figure 66. The process of maintaining synchronization is illustrated in Figure 67.

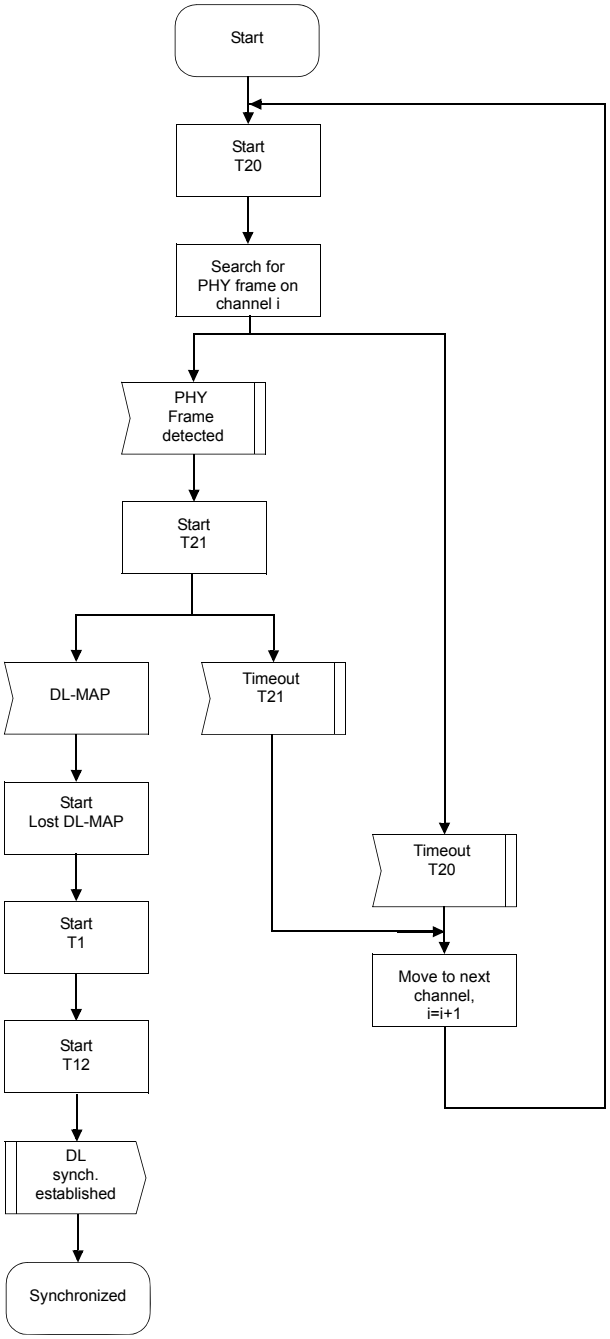

Figure 66—Obtaining DL synchronization

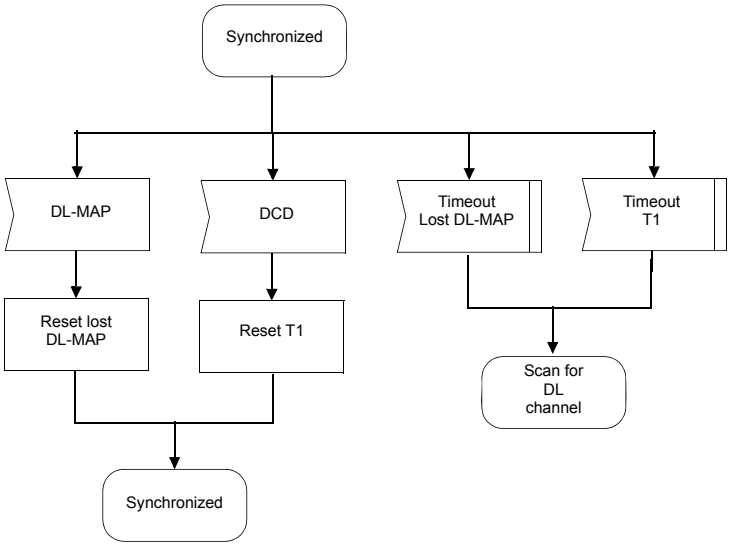

Figure 67—Maintaining DL synchronization

6.3.9.3 Obtain UL parameters

After synchronization, the SS shall wait for a UCD message from the BS in order to retrieve a set of transmission parameters for a possible UL channel. These messages are transmitted periodically from the BS for all available UL channels and are addressed to the MAC broadcast address.

If no UL channel can be found after a suitable timeout period, then the SS shall continue scanning to find another DL channel. An MS may use information received in the UCD or MOB_NBR-ADV messages, such as the Available UL Radio Resources, to determine whether the channel is suitable for its intended use and whether it should continue scanning for other channels. The process of obtaining UL parameters is illustrated in Figure 68.

The SS shall determine from the channel description parameters whether it may use the UL channel. For FDD, the BS shall include the Frequency parameter in the UCD with a UL center frequency value different than the DL center frequency value of the Frequency parameter in the DCD. The SS shall interpret the different UL center frequency value as explicit indication that the duplexing technique for the channel is FDD. For TDD, the BS may include the Frequency parameter in the UCD with a UL center frequency value the same as the DL center frequency value of the Frequency parameter in the DCD. The SS shall interpret a UL center frequency value equal to the DL center frequency value, or the absence of any Frequency TLV in the UCD as explicit indication that the duplexing technique for the channel is TDD. If the channel is not suitable, then the SS shall continue scanning to find another DL channel until all channels are exhausted. If the channel is suitable, the SS shall extract the parameters for this UL from the UCD. Then, the SS shall wait for a bandwidth allocation map for the selected channel. It may begin transmitting UL in accordance with the MAC operation and the bandwidth allocation mechanism.

If, after scanning all channels, the SS does not find a suitable channel, the SS may choose the most appropriate channel based on conditions that include RSSI, CINR, cell type and the available radio resources of all channels to perform initial ranging according to 6.3.9.5.

The SS shall perform initial ranging at least once, per Figure 70 and Figure 71 (in 6.3.9.6). If initial ranging is not successful, the procedure is restarted from scanning to find another DL channel.

The SS MAC is considered to have valid UL parameters as long as it continues to successfully receive the UL-MAP and UCD messages. If at least one of these messages is not received within the time intervals specified in Table 554, the SS shall not use the UL. This is illustrated in Figure 69.

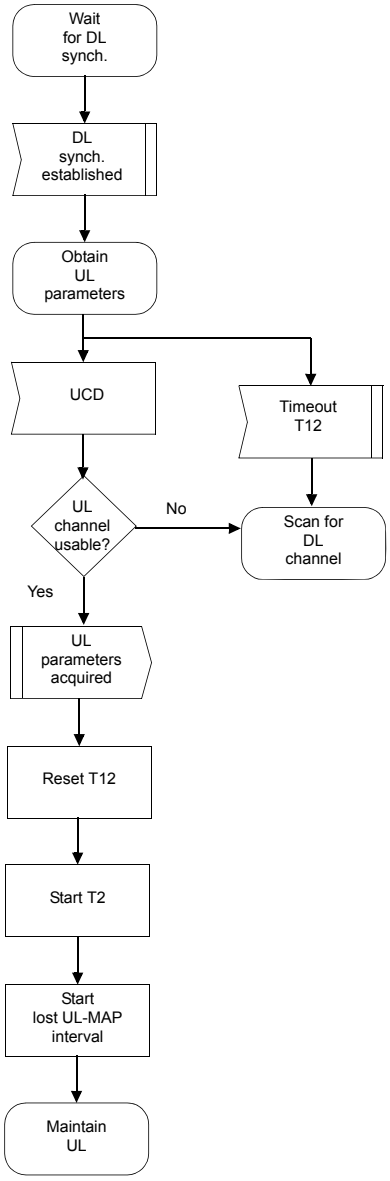

Figure 68—Obtaining UL parameters

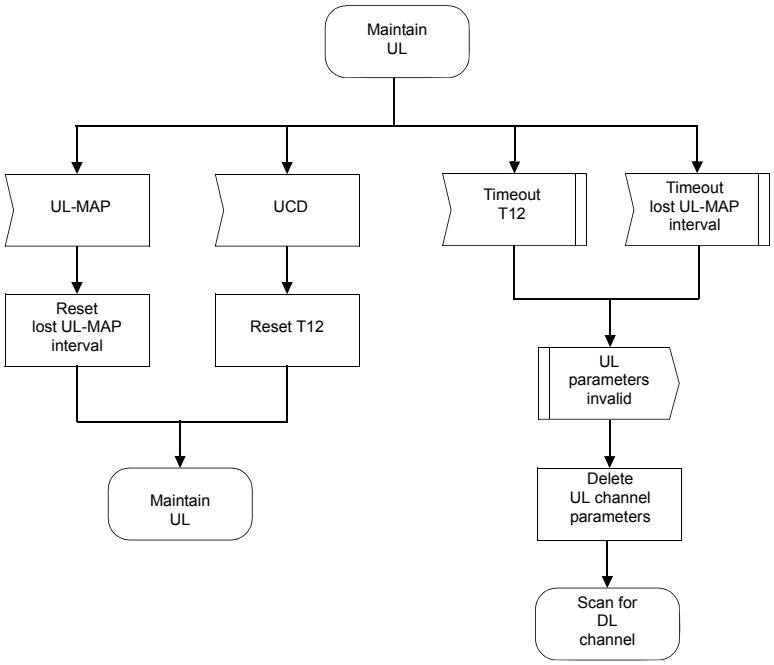

Figure 69—Maintaining UL parameters

6.3.9.4 Message flows during scanning and UL parameter acquisition

The BS shall generate UCD and DCD messages on the DL at periodic intervals within the ranges defined in Table 554. The BS may generate UL-MAP and DL-MAP at intervals as specified in a particular PHY specification. These messages are addressed to all SSs. Refer to Table 177.

Table 177—Message flows during scanning and UL parameter acquisition

```
BS                                                          SS

clock time to send DL-MAP          ----------------DL-MAP---------------->   |
clock time to send UCD and DCD     --------------UCD and DCD--------------->  |
                                                                              |
clock time to send DL-MAP          ----------------DL-MAP---------------->   |
                                                                              | Example of a UCD and DCD
                                                                              | cycle prior to SS power-on
                                                                              |
clock time to send DL-MAP          ----------------DL-MAP---------------->   |
                                                                              |
clock time to send DL-MAP          ----------------DL-MAP---------------->   |
```


Table 177—Message flows during scanning and UL parameter acquisition *(continued)*

BS		SS
clock time to send DL-MAP	----------DL-MAP---------->	
clock time to send UCD and DCD	----------UCD and DCD---------->	
clock time to send DL-MAP	----------DL-MAP---------->	
		power on sequence complete
clock time to send DL-MAP	----------DL-MAP---------->	
clock time to send DCD	----------DCD---------->	
		establish PHY synchronization & wait for UCD
clock time to send DL-MAP	----------DL-MAP---------->	
clock time to send DL-MAP	----------DL-MAP---------->	
clock time to send UCD	----------UCD---------->	
		obtain parameters for this UL channel to use for initialization
clock time to send DL-MAP	----------DL-MAP---------->	
		extract slot info for UL and wait for transmission opportunity to perform ranging
clock time to send DL-MAP	----------DL-MAP---------->	
clock time to send UL-MAP	----------UL-MAP---------->	
		start ranging process

6.3.9.5 Initial ranging and automatic adjustments

Ranging is the process of acquiring the correct timing offset and power adjustments so that the SS's transmissions are aligned to a symbol that marks the beginning of a minislot boundary in SC and Sca PHY, or aligned with the BS receive frame for OFDM and OFDMA PHY, and received within the appropriate reception thresholds. The timing delays through the PHY shall be relatively constant. Any variation in the PHY delays shall be accounted for in the guard time of the UL PHY overhead.

6.3.9.5.1 Contention-based initial ranging and automatic adjustments

First, an SS shall synchronize to the DL and learn the UL channel characteristics through the UCD MAC management message. At this point, the SS shall scan the UL-MAP message to find an initial ranging interval. The BS shall allocate an initial ranging interval consisting of one or more transmission opportunities. For SC and OFDM PHY, the size of each transmission opportunity shall be as specified by the UCD TLV, Ranging Request Opportunity Size.

For SC and OFDM PHY, the SS shall put together a RNG-REQ message to be sent in an initial ranging interval. The duration of the burst carrying the RNG-REQ message shall be as specified in the Ranging Request Burst Size TLV (see 11.3.1). The CID field shall be set to the noninitialized SS value (zero). For the OFDM PHY, the initial ranging process may include a subchannelized mechanism specified in 8.3.7.2. For the OFDMA PHY, the initial ranging process shall begin by sending initial ranging CDMA codes on the UL allocation dedicated for that purpose (for more details see 6.3.10.3), instead of RNG-REQ messages sent on contention slots.

For OFDMA PHY, when the BS is FDD and the SS is H-FDD, then the SS shall always use Group 1 for all purposes for initial network entry and re-entry.

Ranging adjusts each SS's timing offset such that it appears to be co-located with the BS. The SS shall set its initial timing offset to the amount of internal fixed delay and this amount includes delays introduced through a particular implementation and shall include the downlink PHY interleaving latency, if any. In TDD with OFDMA PHY systems, if the BS transmits the UL_initial_transmit timing TLV in the UCD, the SSs transmit timing shall be referenced to the value indicated by this TLV. Otherwise, the SS transmit timing shall be referenced to the "UL Allocation Start Time" value specified in the UL-MAP.

If the Ranging Abort Timer TLV encoding is included in RNG-RSP, the MS shall abort the current network entry attempt and shall not redo ranging to the current BS until the Ranging Abort Timer expires.

When the initial ranging transmission opportunity occurs, the SS shall send the RNG-REQ message (or a CDMA code in case of the OFDMA PHY). Thus, the SS sends the message as if it were colocated with the BS.

The SS shall calculate the maximum Tx signal strength for initial ranging, $P_{TX\_IR\_MAX}$, from Equation (2).

$$P_{TX\_IR\_MAX} = \text{EIRx}P_{IR,max} + \text{BS\_EIRP} - \text{RSS} \tag{2}$$

where the EIRx$P_{IR,max}$ and BS_EIRP are obtained from the DCD, and RSS is the measured RSSI, by the SS, as described in the respective PHY.

In the case that the Rx and Tx gain of the SS antennae are substantially different, the SS shall use Equation (3).

$$P_{TX\_IR\_MAX} = \text{EIRx}P_{IR,max} + \text{BS\_EIRP} - \text{RSS} + (G_{Rx\_SS} - G_{Tx\_SS}). \tag{3}$$

where

G_{Rx_SS} is the SS Rx antenna gain

G_{Tx_SS} is the SS Tx antenna gain

In the case that the EIR × $P_{IR,max}$ and/or BS_EIRP is not known, the SS shall start from its minimum Tx power level.

NOTE 1—The $EIRxP_{IR,max}$ is the maximum equivalent isotropic received power, which is computed for a simple single-antenna receiver as $RSS_{IR,max}$ − GANT_BS_Rx, where the $RSS_{IR,max}$ is the received signal strength at antenna output and GANT_BS_Rx is the receive antenna gain. The BS_EIRP is the equivalent isotropic radiated power of the BS, which is computed for a simple single-antenna transmitter as P_{Tx} + GANT_BS_Tx, where P_{Tx} is the Tx power and GANT_BS_Tx is the Tx antenna gain.

For SC and OFDM PHY, the SS shall send the RNG-REQ at a power level below $P_{TX\_IR\_MAX}$, measured at the antenna connector. If the SS does not receive a response, the SS shall resend the RNG-REQ at the next appropriate initial ranging transmission opportunity and adjust its power level. If the SS receives a response containing the frame number in which the RNG-REQ was transmitted, it shall consider the transmission attempt unsuccessful but implement the corrections specified in the RNG-RSP and issue another RNG-REQ message after the appropriate backoff delay. If the SS receives a response containing its MAC Address, it shall consider the RNG-RSP reception successful. If the SS does not receive a response, the SS shall resend the RNG-REQ at the next appropriate initial ranging transmission opportunity and adjust its power level.

When a WirelessMAN-OFDM BS detects a transmission in the ranging slot that it is unable to decode, it may respond by transmitting a RNG-RSP that includes transmission parameters, but identifies the frame number and frame opportunity when the transmission was received instead of the MAC Address of the transmitting SS.

For OFDMA, the SS shall send a CDMA code at a power level below $P_{TX\_IR\_MAX}$, measured at the antenna connector. If the SS does not receive a response, the SS shall send a new CDMA code at the next appropriate initial ranging transmission opportunity and adjust its power level. If the SS receives a RNG-RSP message containing the parameters of the code it has transmitted and status Continue, it shall consider the transmission attempt unsuccessful but implement the corrections specified in the RNG-RSP and issue another CDMA code after random selection of one Ranging Slot in a single frame. If the SS receives an UL-MAP containing a CDMA Allocation IE with the parameters of the code it has transmitted, it shall consider the RNG-RSP reception successful, and proceed to send a unicast RNG-REQ on the allocated bandwidth. More details on this procedure can be found in 6.3.10.3.

Once the BS has successfully received the RNG-REQ message, it shall return a RNG-RSP message using the Initial Ranging CID. Within the RNG-RSP message shall be the Basic and Primary Management CIDs assigned to this SS. The message shall also contain information on RF power level adjustment and offset frequency adjustment as well as any timing offset corrections. At this point the BS shall start using invited initial ranging intervals addressed to the SS's Basic CID to complete the ranging process, unless the status of the RNG-RSP message is success, in which case the initial ranging procedure shall end.

If the status of the RNG-RSP message is continue, the SS shall wait for an individual initial ranging interval assigned to its Basic CID. Using this interval, the SS shall transmit another RNG-REQ message using the Basic CID along with any power level and timing offset corrections. In OFDM PHY, in this case, the RNG-REQ message will be transmitted with padding of unused part of the Initial Ranging Opportunity Interval.

The BS shall return another RNG-RSP message to the SS with any additional fine tuning required. The ranging request/response steps shall be repeated until the response contains a ranging successful notification or the BS aborts ranging. Once successfully ranged (RNG-REQ is within tolerance of the BS), the SS shall join normal data traffic in the UL. In particular, state machines and the applicability of retry counts and timer values for the ranging process are defined in Table 554.

NOTE 2—The burst profile to use for any UL transmission is defined by the uplink interval usage code (UIUC). Each UIUC is mapped to a burst profile in the UCD message.

For SC and OFDM PHY, the message sequence chart (Table 178) and flow charts (Figure 70, Figure 71, Figure 72, and Figure 73) in 6.3.9.6 define the ranging and adjustment process that shall be followed by compliant SSs and BSs. For OFDMA PHY, these details can be found in 6.3.10.3.

Table 178—Ranging and automatic adjustments procedure

BS		SS
[time to send the initial ranging opportunity]		
send map containing Initial Ranging IE with a Broadcast CID	----------UL-MAP---------->	
	<---------RNG-REQ-------	transmit ranging packet in contention mode with Connection ID parameter = 0
[a][if detect undecodable ranging packet]		
[a]send ranging response, including Frame Number, Frame Opportunity, CID = 0	----------RNG-RSP[a]------->	
		[a][recognize frame number/ opportunity when packet was sent] Adjust parameters, prepare to transmit another RNG-REQ at next opportunity
[else receive decodable ranging packet]		
allocate Basic and Primary Management CID		
send ranging response	----------RNG-RSP------->	
add Basic CID to poll list		[recognize own MAC Address] store Basic Connection ID and adjust other parameters
[time to send the next map]		
send map with Initial Ranging IE to SS using Basic CID	----------UL-MAP---------->	[recognize own Basic Connection ID in map]
	<---------RNG-REQ-------	reply to initial ranging opportunity poll
send ranging response	----------RNG-RSP------->	
		adjust local parameters
send periodic Tx opportunity to broadcast address	----------UL-MAP---------->	

[a] WirelessMAN-OFDM PHY only.

NOTE 1—The BS shall allow the SS sufficient time to have processed the previous RNG-RSP (i.e., to modify the transmitter parameters) before sending the SS a specific ranging opportunity. This is defined as SS ranging response processing time in Table 554.

NOTE 2—For multichannel support, the SS shall attempt initial ranging on every suitable UL channel before moving to the next available DL channel. Suitability of a channel is determined by conditions that include RSSI, CINR, Cell Type, Available DL Radio Resources and Available UL Radio Resources.

During initial Network Entry, a BS may decide to re-direct the ranging SS to another channel by sending the RNG-RSP with an Offset Frequency Adjustment pointing to the other channel. If the Offset Frequency Adjustment value is less than half of the channel bandwidth, this is fine-frequency adjustment within the ranged channel, otherwise, the value is a reassignment to a different channel.

On receiving a RNG-RSP instruction to move to a new DL frequency, the SS shall consider any previously assigned Basic, Primary Management, and Secondary Management CIDs to be deassigned and shall obtain new Basic, Primary Management, and Secondary Management CIDs via initial ranging and registration.

It is possible that the RNG-RSP may be lost after transmission by the BS. The SS shall recover by timing out and reissuing its Initial RNG-REQ. Since the SS is uniquely identified by the source MAC address in the ranging request, the BS may immediately reuse the Basic, Primary Management, and Secondary Management CIDs previously assigned. If the BS assigns new Basic, Primary Management, and Secondary Management CIDs, it shall make some provision for aging out the old CIDs that went unused.

For MSs that are employing the optional association procedure, and to which the MS and BS are currently associated, the MS may use its unexpired, previously obtained and retained associated ranging Tx parameters to set initial ranging values including PTX_IR_MAX power levels.

6.3.9.6 Ranging parameter adjustment

Adjustment of local parameters (e.g., Tx power) in an SS as a result of the receipt (or non receipt) of a RNG-RSP is considered to be implementation-dependent with the following restrictions:

a) All parameters shall be within the approved range at all times.
b) Power adjustment shall start from the initial value selected with the algorithm described in 6.3.9.5 unless a valid power setting is available from nonvolatile storage, in which case this value may be used as the starting point.
c) Power adjustment shall be capable of being reduced or increased by the specified amount in response to RNG-RSP messages.
d) If, during initialization, power is increased to the maximum value $P_{TX\_IR\_MAX}$ (with a response from the BS) or to its maximum capability (without a response from the BS), it shall wrap back to the minimum
e) If power is increased to the maximum value $P_{TX\_IR\_MAX}$ during initialization in a TDD system without a response from the BS, the SS shall wrap power back to the minimum. If the power is increased to its maximum capability during initialization in an FDD system without a response from the BS, the SS shall wrap power back to the minimum.

On receiving a RNG-RSP, the SS shall not transmit until the RF signal has been adjusted in accordance with the RNG-RSP and has stabilized. See Figure 70 through Figure 74.

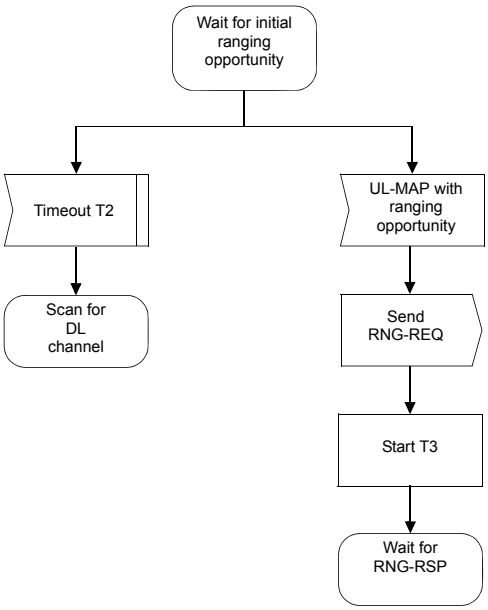

Figure 70—Initial ranging—SS (part 1)

NOTE—Timeout T3 may occur because the RNG-REQs from multiple SSs collided. T3 timeouts can also occur during multichannel operation. On a system with multiple UL channels, the SS shall attempt initial ranging on every suitable UL channel before moving to the next available DL channel.

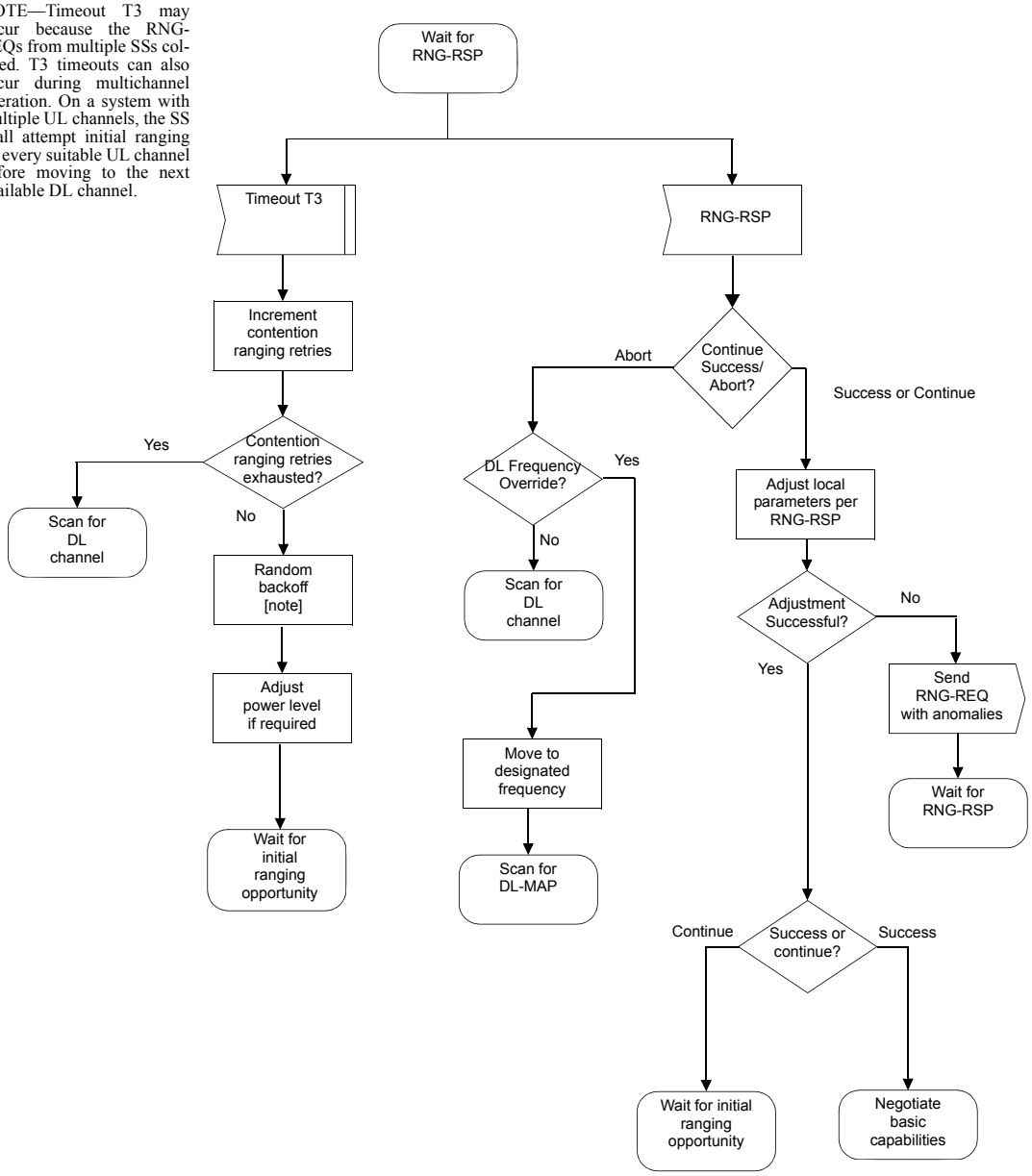

Figure 71—Initial ranging—SS (part 2)

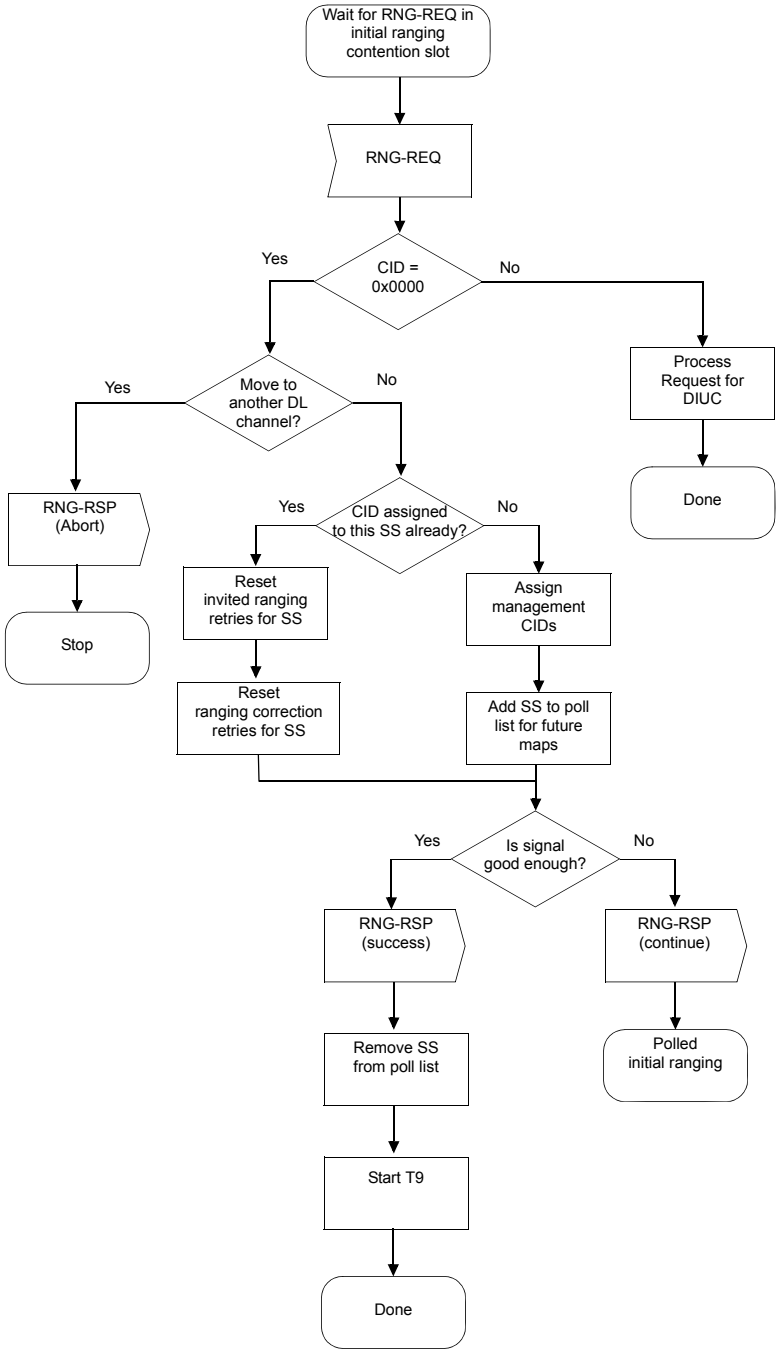

Figure 72—Initial ranging—BS

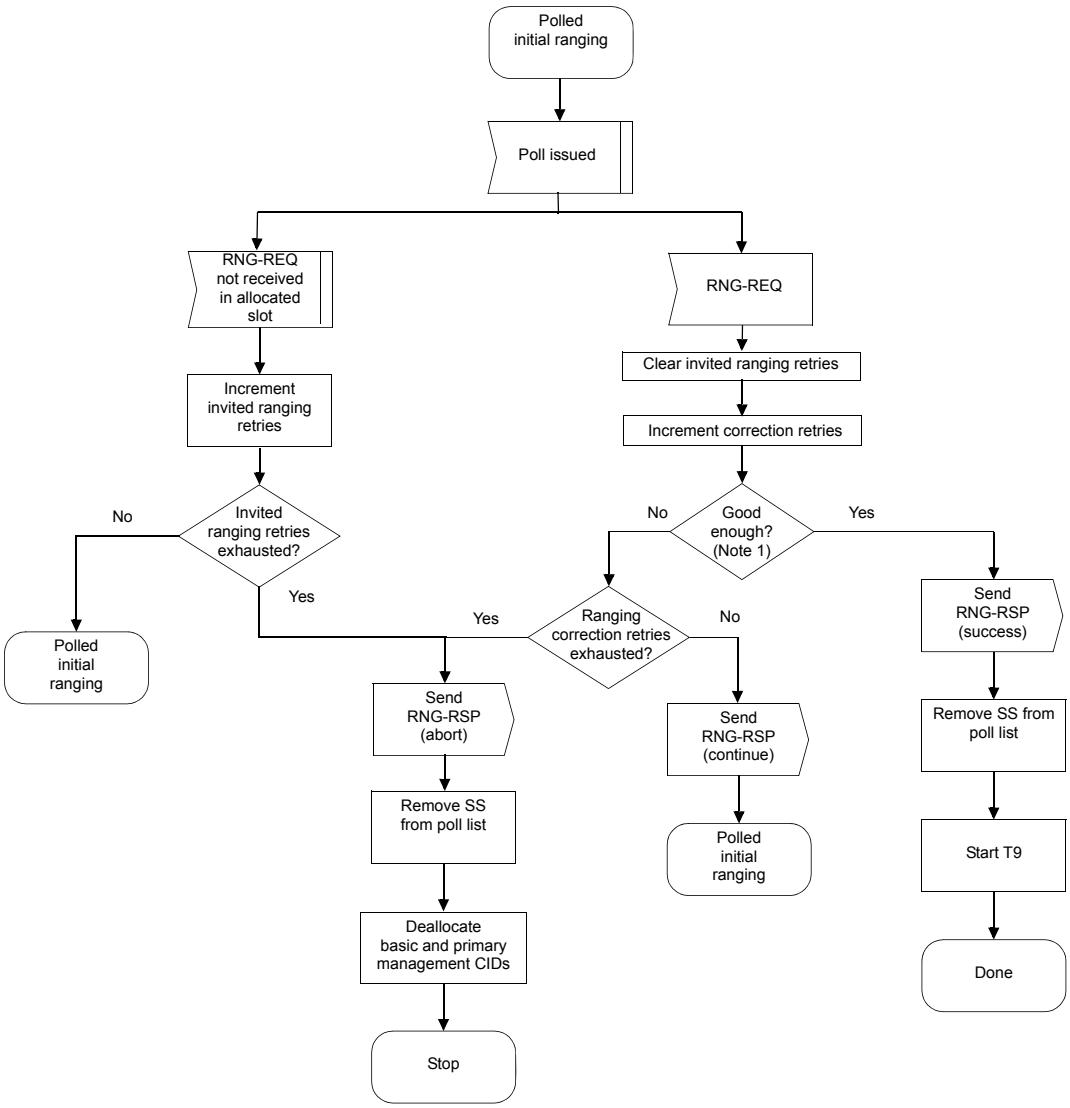

NOTE—Means ranging is within the tolerable limits of the BS.

Figure 73—Initial ranging, polled phase—BS

For systems operating below 11 GHz, the BS may in addition respond to undecodable messages in an initial ranging slot as shown in Figure 74.

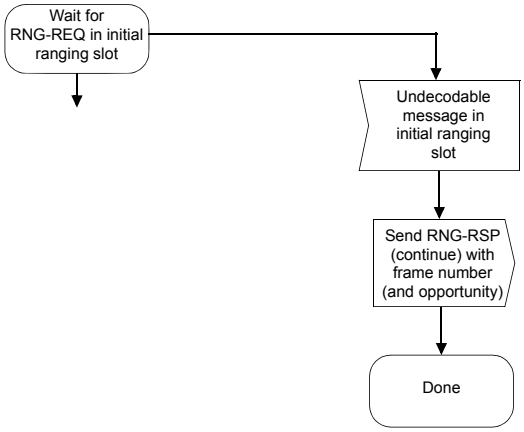

Figure 74—Initial ranging—BS response to undecodable message

6.3.9.7 Negotiate basic capabilities

Immediately after completion of ranging, the SS informs the BS of its basic capabilities by transmitting an SBC-REQ message with its capabilities set to "on" (see Figure 75). The BS responds with an SBC-RSP message with the intersection of the SS's and the BS's capabilities set to "on" (see Figure 76 and Figure 77, respectively).

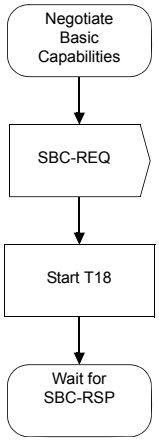

Figure 75—Negotiating basic capabilities—SS

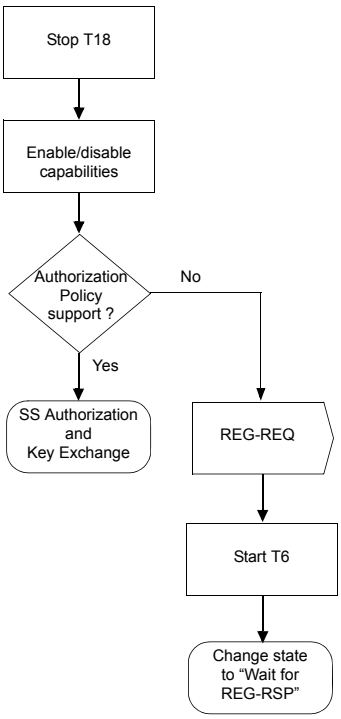

Figure 76— Handle SBC-RSP, SS side

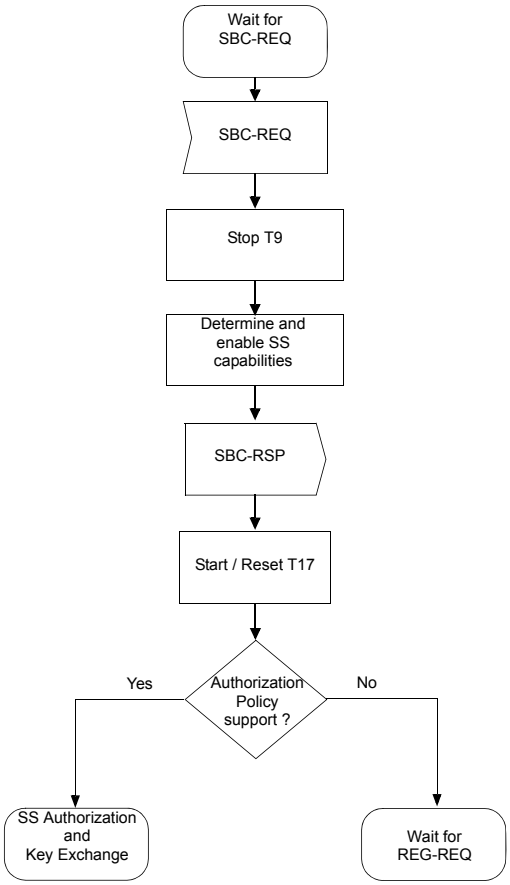

Figure 77—Handling SBC-REQ first reception, BS side

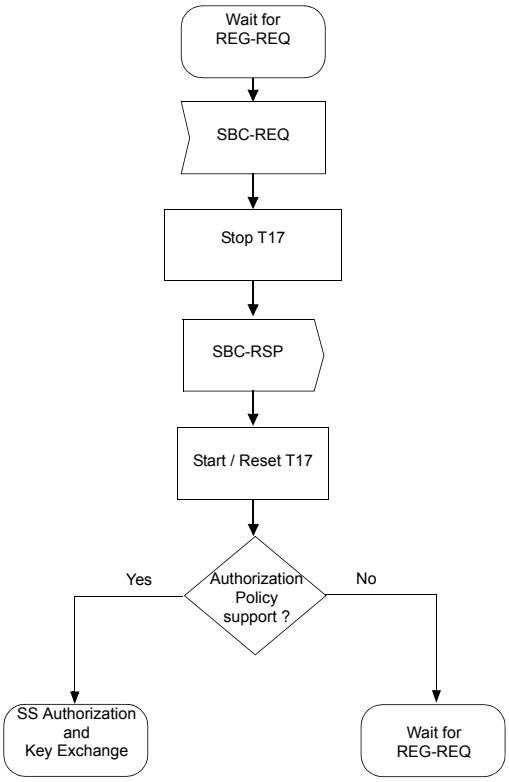

Figure 78—Handle SBC-REQ retransmission, BS side

6.3.9.8 SS authorization and key exchange

If PKM is enabled (see 11.8.4), the BS and SS shall perform authorization and key exchange as described in 7.2.

If MIH query capability during network entry is enabled (refer to 11.4.1 and 11.8.10), the BS and MS may perform MIH query using PKM messages before authorization and key exchange.

6.3.9.9 Registration

Registration is the process by which the SS is allowed entry into the network and a managed SS receives its Secondary Management CID and thus becomes manageable. To register with a BS, the SS shall send a REG-REQ message to the BS. The BS shall respond with a REG-RSP message. For an SS that has indicated being a managed SS in the REG-REQ message, the REG-RSP message shall include the Secondary Management CID. Figure 79 shows the procedure that shall be followed by the SS.

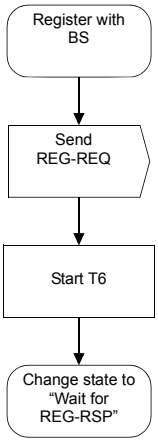

Figure 79—Registration—SS

Once the SS has sent a REG-REQ to the BS, it shall wait for a REG-RSP to authorize it to forward traffic to the network. Figure 80 shows the waiting procedure that shall be followed by the SS.

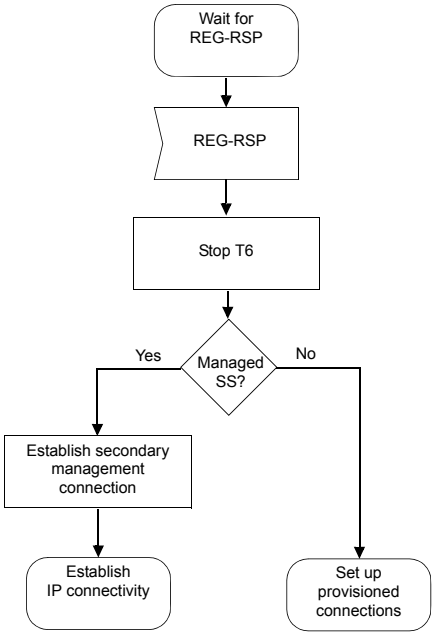

Figure 80—Handling REG-RSP

The BS shall perform the operations shown in Figure 81.

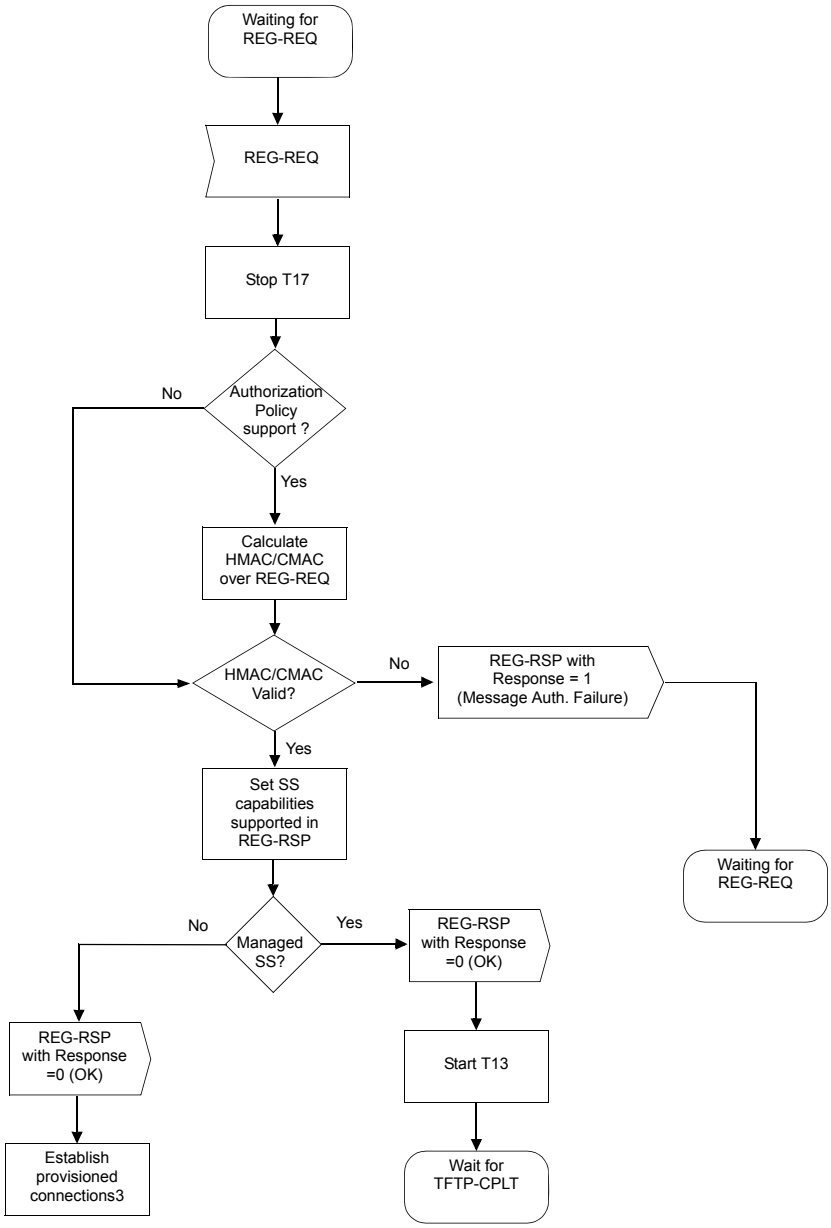

Figure 81—Handle REG-REQ first reception—BS

Figure 82 describes the NW entry process on the BS side. The transitions and states that are marked with asterisks (*) apply only to OFDMA PHY.

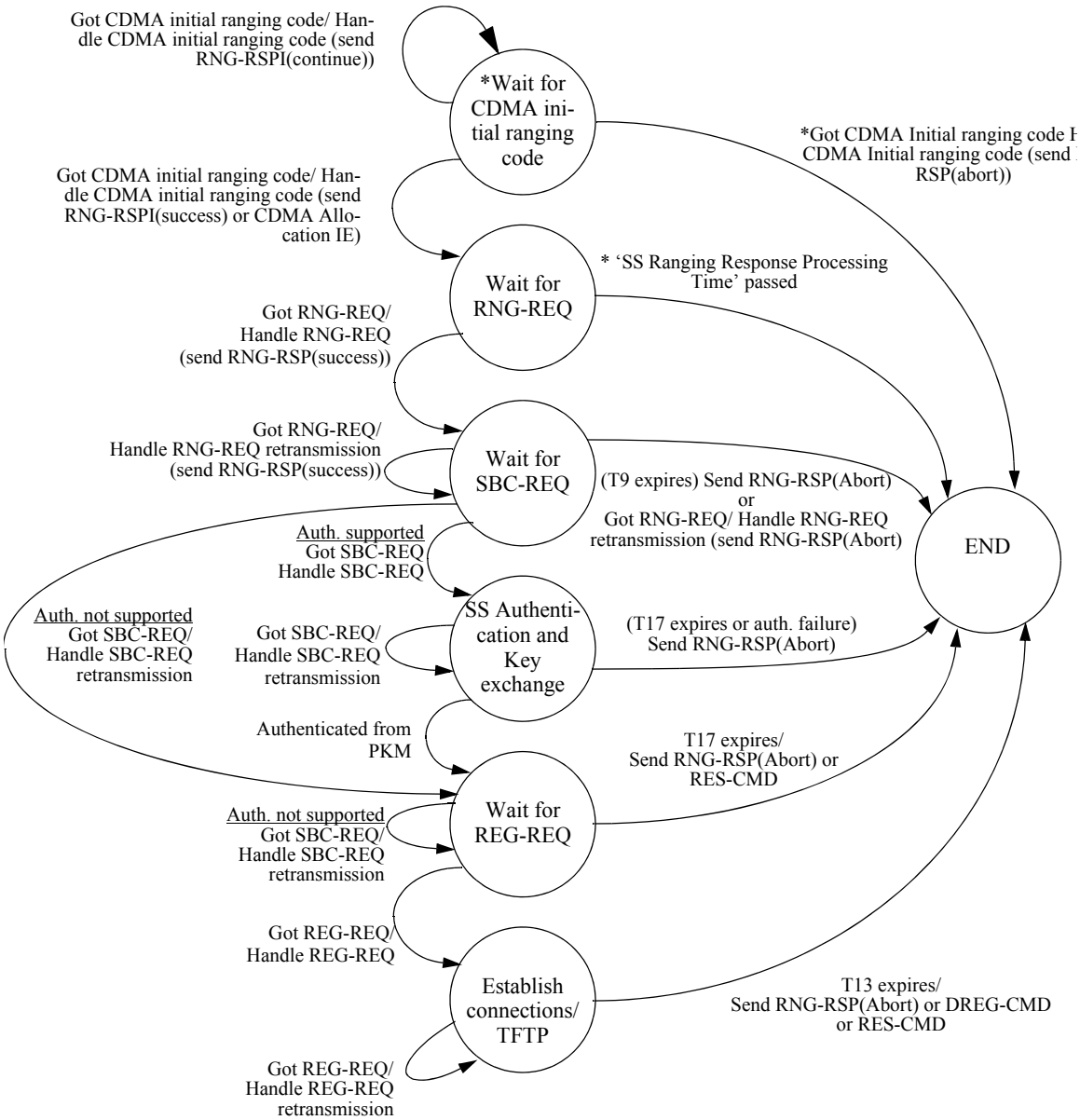

Figure 82—Network entry state machine, BS side

Figure 83 describes the NW entry process on the MS side. The transitions and states that are marked with asterisks (*) apply only to OFDMA PHY.

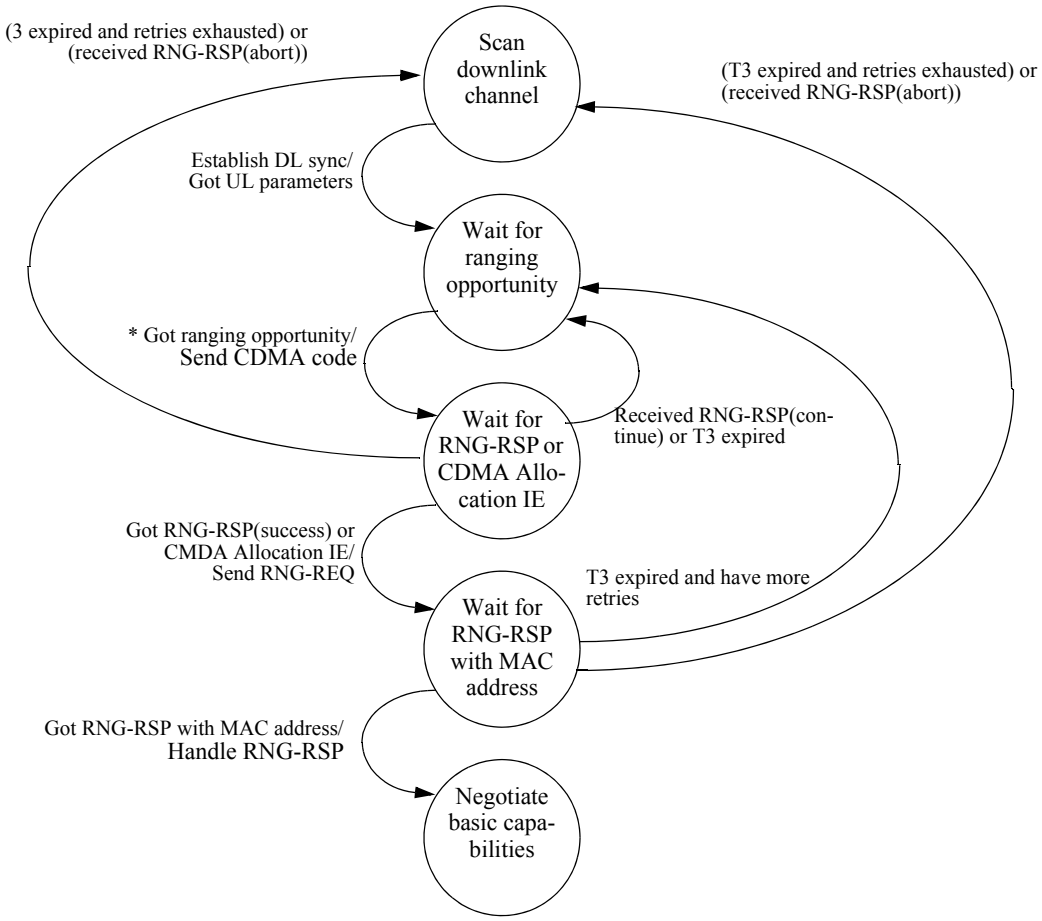

Figure 83—Network entry state machine, SS side

Figure 84 describes the Ranging procedure within the NW entry process on the MS side. The transitions and states that are marked with asterisks (*) apply only to OFDMA.

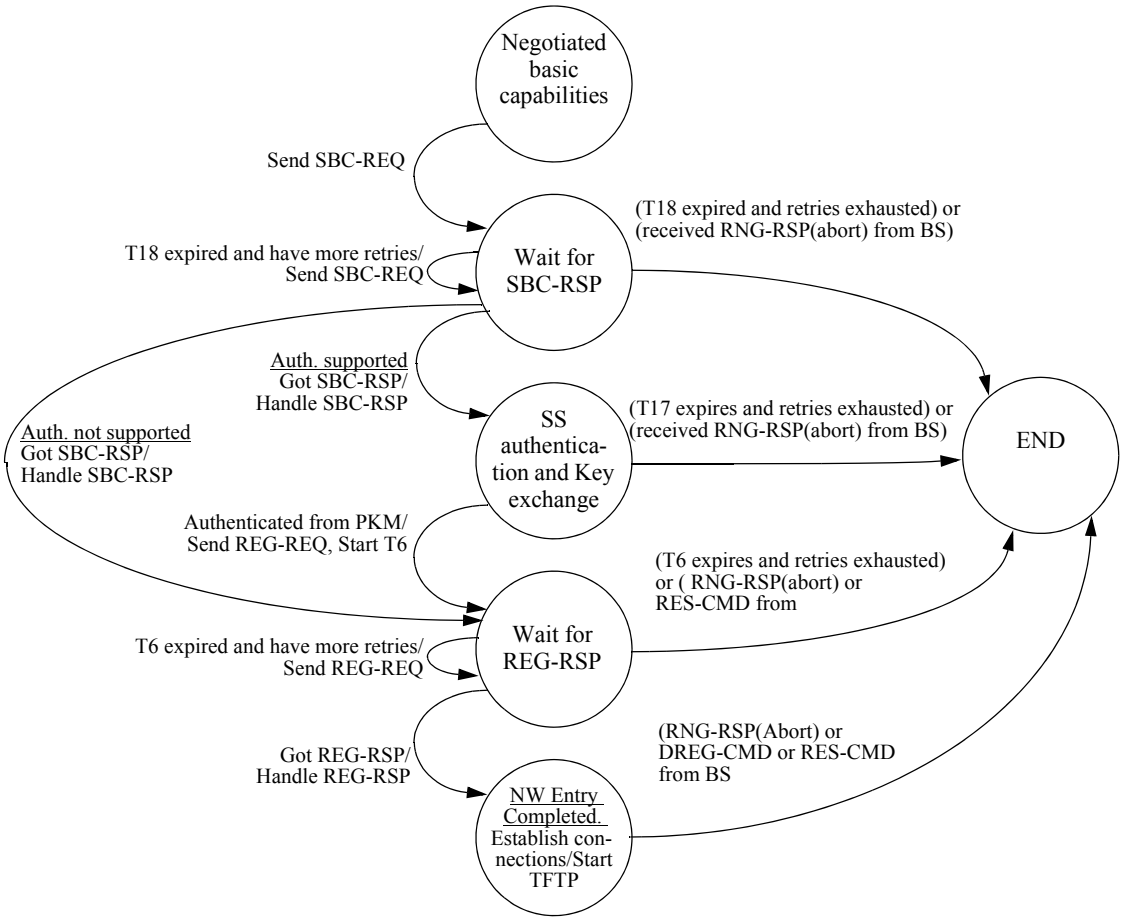

Figure 84—Ranging procedure in network entry state machine—SS side

For managed SS, upon sending a REG-RSP, the BS shall wait for a TFTP-CPLT. If timer T13 (defined in Table 554) expires, the BS shall both deassign the management CIDs from that SS and make some provision for aging out those CIDs (see Figure 85 and Figure 86).

6.3.9.9.1 IP version negotiation

The SS may include the IP Version (11.7.4) parameter in the REG-REQ to indicate which versions of IP it supports on the secondary management connection. When present in the REG-REQ, the BS shall include the IP Version parameter (11.7.4) in the REG-RSP to command the SS to use the indicated version of IP on the secondary management connection. The BS shall command the use of exactly one of the IP versions supported by the SS.

The omission of the IP Version parameter in the REG-REQ shall be interpreted as IPv4 support only. Consequently, omission of the IP Version parameter in the REG-RSP shall be interpreted as a command to use IPv4 on the secondary management connection.

6.3.9.10 Establishing IP connectivity

For an MS, if mobile IP is being used, the MS may secure its address on the secondary management connection using mobile IP.

Otherwise, for all SSs and for MSs using IPv4 and not using mobile IP, they shall invoke DHCP mechanisms (IETF RFC 2131) in order to obtain an IP address and any other parameters needed to establish IP connectivity. If the SS has a configuration file, the DHCP response shall contain the name of a file that contains further configuration parameters. For SSs using IPv6, they shall either invoke DHCPv6 (IETF RFC 3315) or IPv6 Stateless Address Autoconfiguration (IETF RFC 2462) based on the value of a TLV tuple in REG-RSP. For a managed SS, IP connectivity shall be performed on the SS's secondary management connection.

The IP version parameter shall be included in the TLV for a managed SS (see 11.7.4 for the TLV).

Table 179—Establishing IP connectivity

SS/Node		DHCP
Send DHCP request to broadcast address		
	----------DHCP discover---------->	
		Check SS MAC address and respond
	<----------DHCP offer ----------	
Choose server		
	----------DHCP request---------->	
		Process request
	<----------DHCP response----------	
Set up IP parameters from DHCP response		

6.3.9.11 Establishing time of day

The SS and BS need to have the current date and time. This is required for time-stamping logged events for retrieval by the management system. This need not be authenticated and need be accurate only to the nearest second.

The protocol by which the time of day shall be retrieved is defined in IETF RFC 868. Refer to Table 180. The request and response shall be transferred using UDP. The time retrieved from the server [universal coordinated time (UTC)] shall be combined with the time offset received from the DHCP response to create

the current local time. Establishment of time of day shall be performed on the SS's secondary management connection.

Table 180—Establishing time of day

```
SS                                                          Time Server

send request to time server
                    ----------------time of day request------------>
                                                                process request
                    <--------------time of day response--------------
set up / correct time of day
from response
```

Successfully acquiring the Time of Day is not mandatory for a successful registration, but is necessary for ongoing operation. The specific timeout for Time of Day Requests is implementation dependent. However, the SS shall not exceed more than three Time of Day requests in any five-minute period.

6.3.9.12 Transferring operational parameters

After DHCP is successful, the SS shall download the SS Configuration File (9.2) using TFTP on the SS's secondary management connection, as shown in Table 181 if specified in the DHCP response. The TFTP Configuration File server is specified by the "siaddr" field of the DHCP response. The SS shall use an adaptive timeout for TFTP based on binary exponential backoff (IETF RFC 1123, IETF RFC 2349).

Table 181—Transferring operational parameters

```
SS                                                  BS        TFTP Server

Initiate TFTP Get protocol

        <-------------------------------------- TFTP Config File ------------------------------------ >


Inform BS of completion

        ---------------------------------------- TFT-CPLT ------------------------->

                                                            Acknowledge
                                                            completion

        <-------------------------------------- TFT-RSP---------------------------

                                                            Establish
                                                            provisioned
                                                            connections
```


The parameter fields required in the DHCP response and the format and content of the configuration file shall be as defined in 9.2. Note that these fields are the minimum required for interoperability.

When the configuration file download has completed successfully, the SS shall notify the BS by transmitting a TFTP-CPLT message on the SS's primary management connection. Transmissions shall continue periodically until a TFTP-RSP message is received with "OK" response from the BS (see Figure 85 and Figure 86) or the SS terminates retransmission due to retry exhaustion.

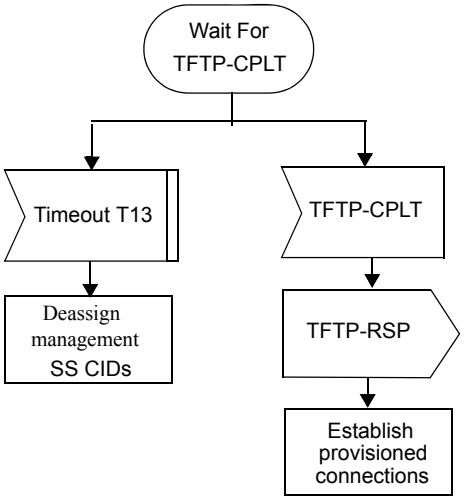

Figure 85—Waiting for TFTP-CPLT—BS

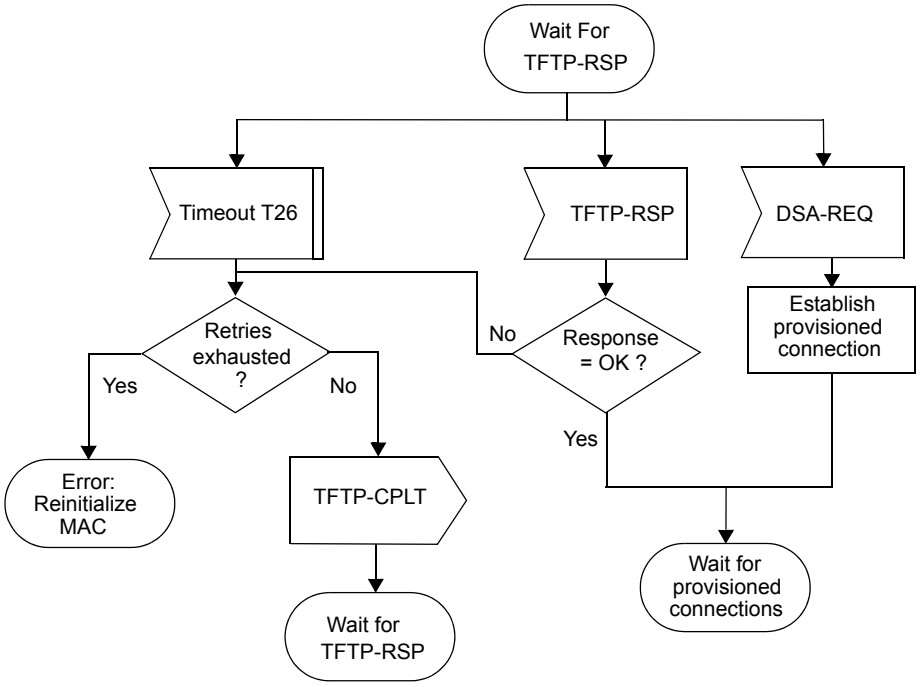

Figure 86—Waiting for TFTP-RSP—SS

6.3.9.13 Establishing provisioned connections

After the transfer of operational parameters (for managed SS) or after registration (for unmanaged SS), the BS shall send DSA-REQ messages to the SS to set up connections for preprovisioned service flows belonging to the SS. The SS responds with DSA-RSP messages. This is described further in 6.3.14.7.1.

6.3.9.14 Forcing MSs to perform network entry at once

A BS may restart due to a critical error or an operator's intention. The BS has the restart count as the number of times in which the BS restarts. This restart count is incremented by one whenever BS restarts. The restart count as TLV encoding is included in DCD message (refer to Table 575). The BS may intentionally increment the restart count to be included in DCD message for the purpose of forcing all MSs to perform the Network Entry due to some problem at the BS or an operator's purpose.

After the BS restarts, it shall inform the MSs of its restart through the incremented restart count in DCD message. The restart count, which BS sent via DCD message, is saved in MS in order to recognize whether BS restarts or not.

Restart count is updated by every BS Restart Count TLV encoding in DCD message sent by BS. In other words, whenever MS receives DCD message, it shall compare the restart count in DCD message with the old one saved in it. If MS detects the restart count in DCD message different from old one save in MS, it shall perform Network Entry.

MOB_NBR-ADV message shall also include the BS Restart Count TLV for neighbor BS in each DCD_settings of DCD message. MS shall save the restart count of each neighbor BS for HO procedure. MS during HO shall compare the restart count of target BS through DCD message with the restart count of target BS saved in MS. As a result, if MS detects the restart of target BS, it shall perform the network entry.

6.3.10 Ranging

Ranging is a collection of processes by which the SS and BS maintain the quality of the RF communication link between them. Distinct processes are used for managing UL and DL. Also some PHY modes support ranging mechanisms unique to their capabilities.

6.3.10.1 DL burst profile management

This mechanism is not applicable to OFDMA PHY.

The DL operational burst profile is determined by the BS according to the quality of the signal that is received by each SS. To reduce the volume of UL traffic, the SS monitors the CINR and compares the average value against the allowed range of operation. This region is bounded by threshold levels. If the received CINR goes outside of the allowed operating region for the DL operational profile, the SS requests a change to a new operational burst profile using one of two methods. In the first method, the SS uses an allocated data grant to send a DBPC-REQ. In the second method, the SS uses the initial ranging interval to send a RNG-REQ. The second method can be used only in context with a request to change to a more robust profile. The SS determines the optimal method. If the first method is used and the SS has been granted UL bandwidth (a data grant allocation to the SS's Basic CID), the SS shall send a DBPC-REQ message in that allocation. The BS responds with a DBPC-RSP message. If the second method is used and the SS requires a more robust burst profile on the DL, the SS shall send a RNG-REQ message in an initial ranging interval. With either method, the message is sent using the Basic CID of the SS. The coordination of message transmission and receipt relative to actual change of operational burst profile is different depending upon whether an SS is transitioning to a more or less robust burst profile. Figure 87 shows the case where an SS is transitioning to a more robust type. Figure 88 shows transition to a less robust burst profile.

The SS has full responsibility to determine its optimal burst profile.

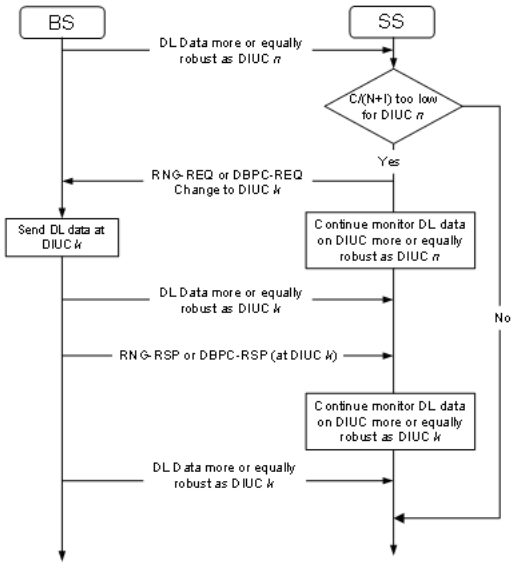

Figure 87—Transition to more robust operational burst profile

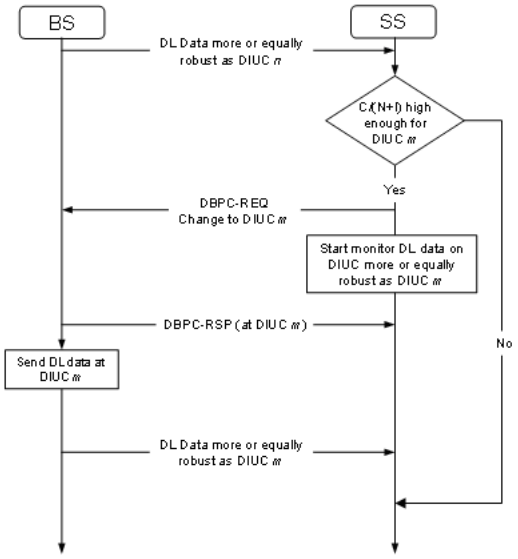

Figure 88—Transition to less robust operational burst profile

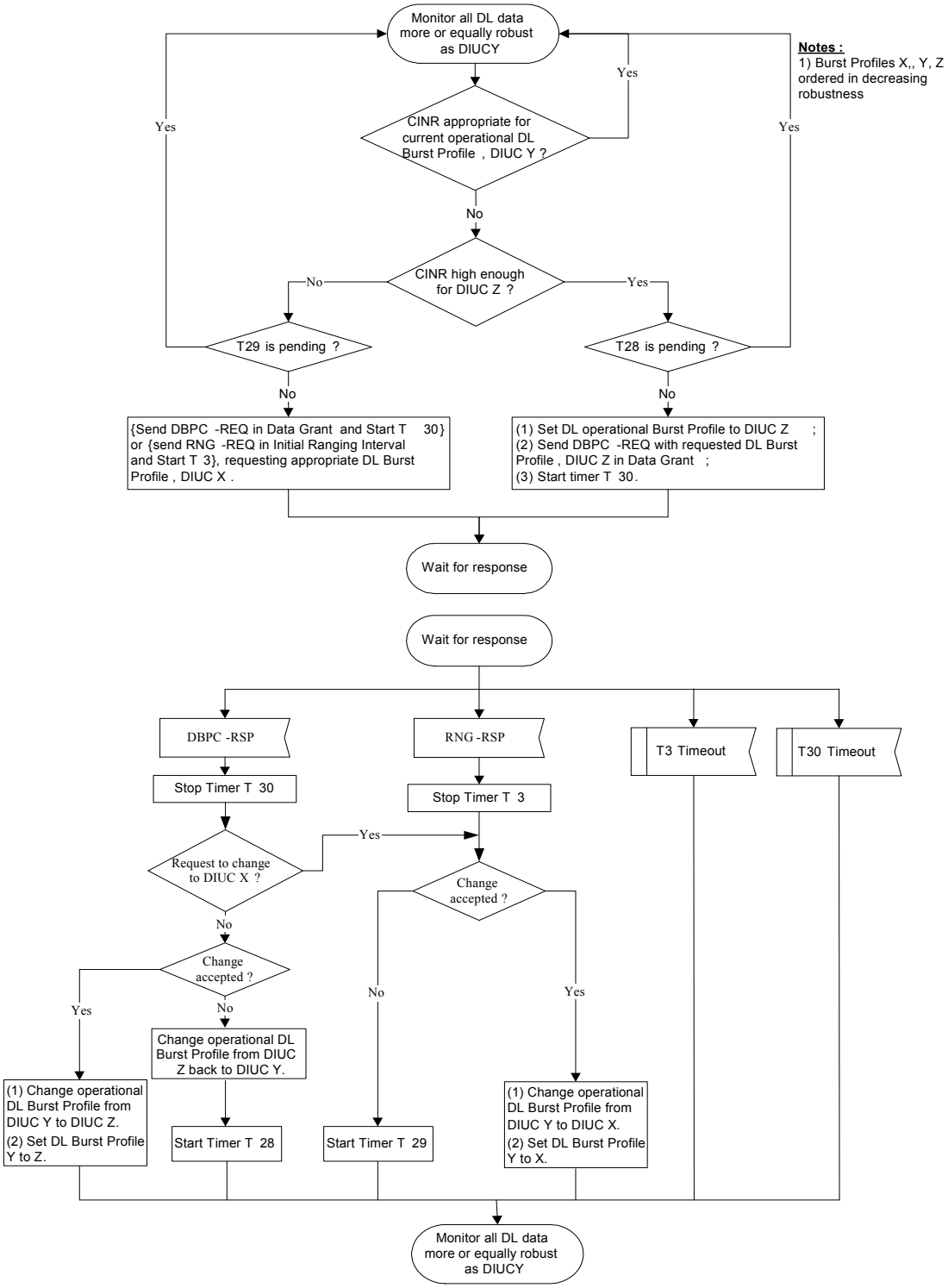

Figure 89—State transition diagram for DL burst profile management—SS

6.3.10.2 UL periodic ranging

UL ranging consists of two procedures—initial ranging and periodic ranging. Initial ranging (see 6.3.9.5) allows an SS joining the network to acquire correct transmission parameters, such as time offset and Tx power level, so that the SS can communicate with the BS. Following initial ranging, periodic ranging allows the SS to adjust transmission parameters so that the SS can maintain UL communications with the BS.

The following summarizes the general algorithm for periodic ranging available to all PHY layers except OFDMA PHY. Diagrams of the SS and BS processes are provided in Figure 90, Figure 91, and Figure 92. CDMA-based ranging for OFDMA systems is described in 6.3.10.3.2.

a) For each SS, the BS shall maintain a T27 timer. At each expiration of the timer, the BS shall grant bandwidth to the SS for an UL transmission in the form of a data grant or an invited ranging opportunity. The timer is restarted each time a unicast grant is made to the SS. As a result, as long as the SS remains active, the BS does not specifically grant bandwidth to the SS for a ranging opportunity.

b) Each SS shall maintain a T4 timer. The expiration of this timer indicates to the SS that it has not been given the opportunity to transmit to the BS for an extended period of time. Operating on the assumption that its UL transmission parameters are no longer usable, the SS initiates a restart of its MAC operations

c) For each unicast UL burst grant, the BS determines whether a transmitted signal is present. If no signal is detected in a specified number of successive grants, the BS shall terminate link management for the associated SS.

d) For each unicast uplink burst grant in which a signal is detected, the BS makes a determination as to the quality of the signal. If the signal is below BS acceptable reception threshold, the BS shall transmit a RNG-RSP (continue). This RNG-RSP (continue) may include corrections. If the signal is above the BS reception threshold, the BS may transmit a RNG-RSP (success). This RNG-RSP (success) may include corrections. If the BS receives a RNG-REQ, the BS shall transmit a RNG-RSP (success). This RNG-RSP (success) may include corrections. If a sufficient number of correction messages are issued without the SS signal quality becoming acceptable, the BS shall send the RNG-RSP message with a status of *abort*, and terminate link management of the SS.

e) The SS shall process each RNG-RSP message it receives, implementing any PHY corrections that are specified (when the status is *continue)* or initiating a restart of MAC activities (when the status is *abort*).

f) When the status of the last RNG-RSP message received is *continue*, the SS shall not use the data grant to service its UL connections except to transmit a RNG-REQ message.

g) When the SS cannot apply a correction, it shall send a RNG-REQ reporting the anomaly in the next data grant or invited ranging opportunity.

h) The SS shall respond to each uplink grant addressed to it and entirely fill the burst. If no data is pending and the last RNG-RSP was success, the SS shall fill the entire grant with a: RNG-REQ or “Padding PDU” or “stuff bytes.”

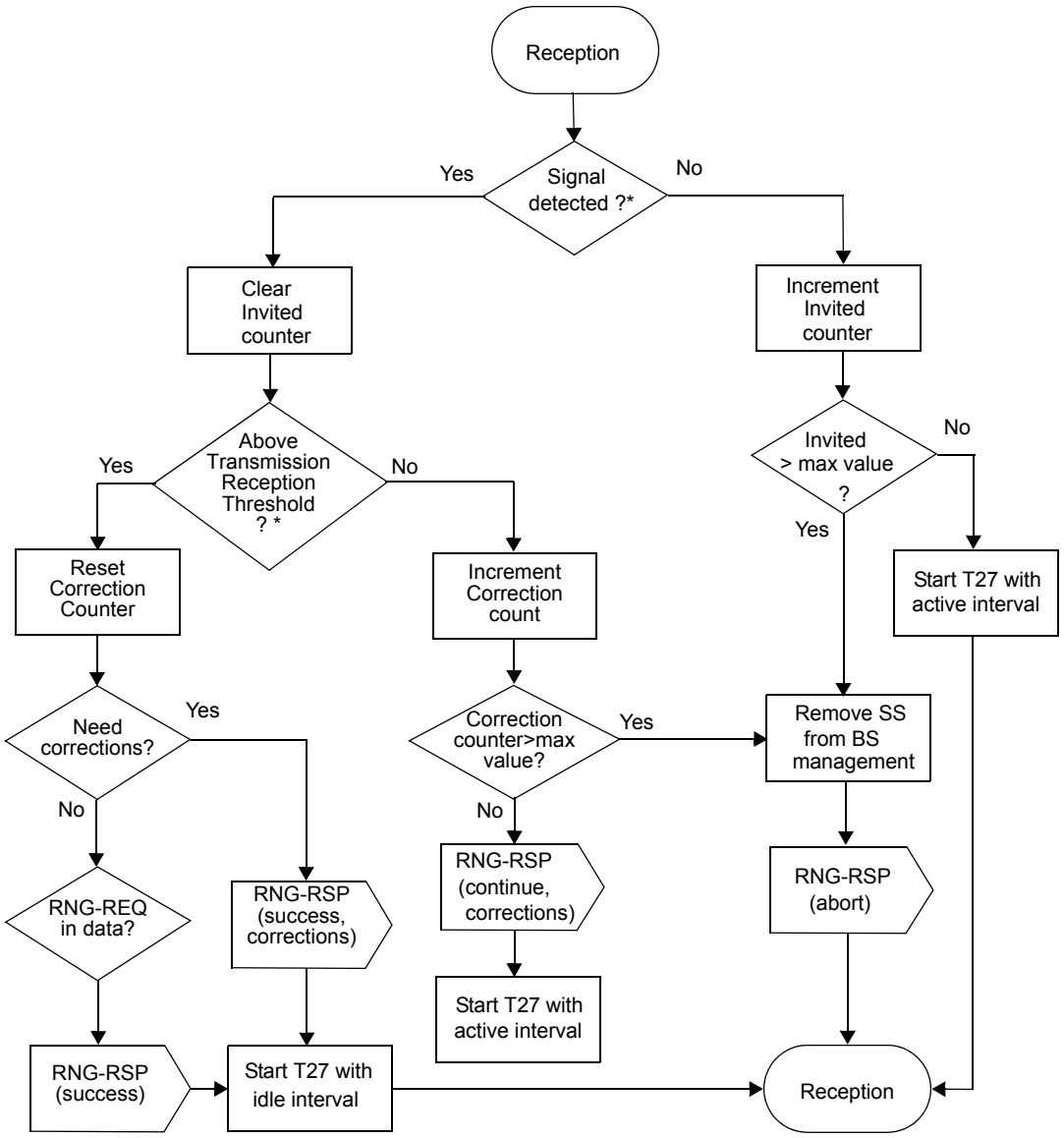

Figure 90—Periodic ranging receiver processing—BS

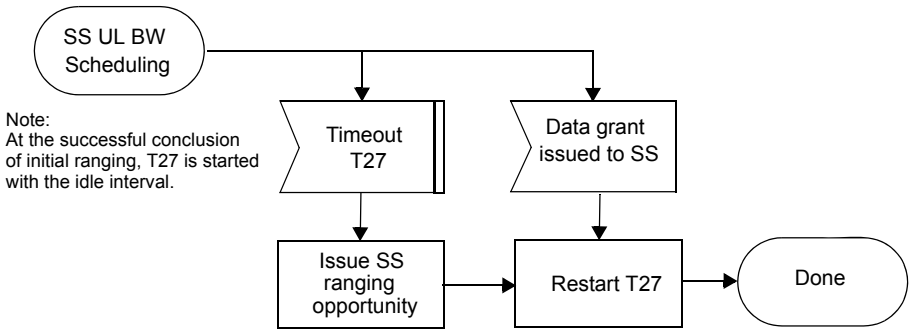

Figure 91—Periodic ranging opportunity allocation—BS

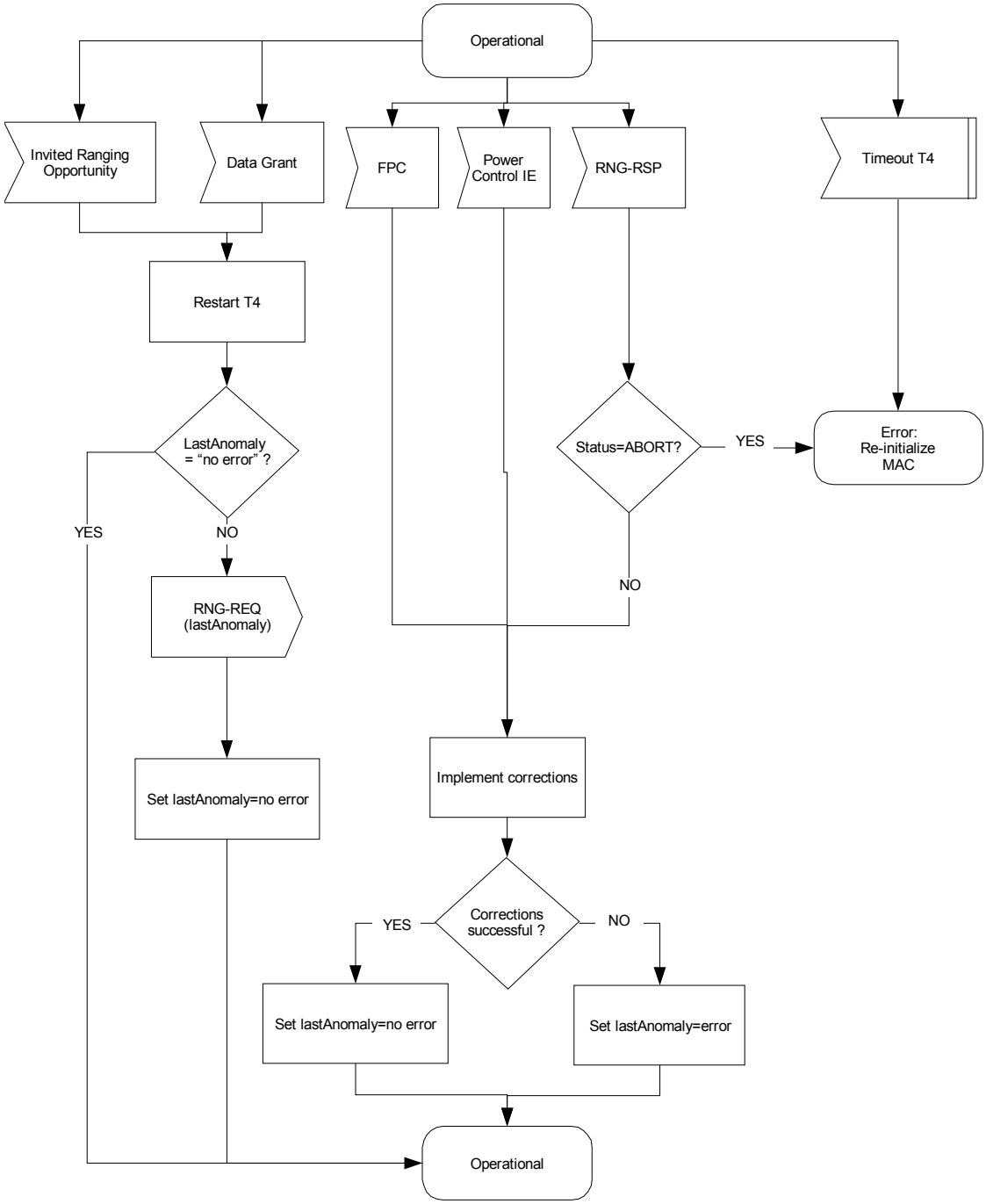

Figure 92—Periodic ranging—SS

6.3.10.3 OFDMA-based ranging

The WirelessMAN-OFDMA PHY specifies a ranging subchannel and a set of special pseudonoise ranging codes. Subsets of codes shall be allocated in the UCD channel encoding for initial ranging, periodic ranging requests, and BRs so that the BS can determine the purpose of the received code by the subset to which the code belongs. An example of ranging channel in OFDMA frame structure is specified in Figure 228.

SSs that wish to perform one of the aforementioned operations shall select, with equal probability, one of the codes of the appropriate subset, modulate it onto the ranging subchannel, and subsequently transmit in ranging slot selected with equal probability from the available ranging slots on the UL subframe. An SS shall use either random selection or random backoff to select a Ranging Slot. When random selection is used, the SS shall select one Ranging Slot from all available slots in a single frame using a uniform random process. When random backoff is used, the SS shall select one Ranging Slot from all available Ranging Slots in the corresponding backoff window using a uniform random process. Details on the modulation and ranging codes are specified in 8.4.7.

For OFDMA PHY, the allocation of ranging opportunity inside a ranging allocation is defined in 8.4.7.4.

6.3.10.3.1 Contention-based initial ranging and automatic adjustments

A SS that wishes to perform initial ranging shall take the following steps:

— The SS, after acquiring downlink synchronization and uplink transmission parameters, shall select one Ranging Slot using the random backoff. The random backoff shall use a binary truncated exponent algorithm. After selecting the Ranging Slot, the SS shall choose a Ranging Code (from the Initial Ranging domain) using a uniform random process. The selected Ranging Code is sent to the BS (as a CDMA code) in the selected Ranging Slot.
— The BS cannot tell which SS sent the CDMA ranging request; therefore, upon successfully receiving a CDMA ranging code, the BS broadcasts a ranging response message that advertises the received ranging code as well as the ranging slot (OFDMA symbol number, subchannel, etc.) where the CDMA ranging code has been identified. This information is used by the SS that sent the CDMA ranging code to identify the ranging response message that corresponds to its ranging request. The ranging response message contains all the needed adjustment (e.g., time, power, and possibly frequency corrections) and a status notification.
— Upon receiving a ranging response message with Continue status, the SS shall continue the ranging process as done on the first entry (using random selection rather than random backoff) with ranging codes randomly chosen from the initial ranging domain sent on the periodic ranging region.
— When the BS receives an initial-ranging CDMA code that requires no corrections, the BS shall provide BW allocation for the SS using the CDMA_Allocation_IE to send a RNG-REQ message. Sending the RNG-RSP message with status “Success” is optional.
— Initial ranging process is over after receiving RNG-RSP message, which includes a valid Basic CID (following a RNG-REQ transmission on a CDMA Allocation IE). If this RNG-RSP message includes “continue” indication, the ranging process should be continued using the periodic ranging mechanisms.
— If the RNG-RSP includes an Offset Frequency Adjustment pointing to another channel and it is larger than the value required for a channel bandwidth offset, the SS should synchronize with the new channel indicated in the RNG-RSP.
— The timeout required for SS to wait for RNG-RSP, following or not following CDMA Allocation IE, is defined by T3.
— Using the OFDMA ranging mechanism, the periodic ranging timer is controlled by the SS, not the BS.

Adjustment of local parameters (e.g., Tx power) in an SS as a result of the receipt (or nonreceipt) of a RNG-RSP is considered to be implementation-dependent with the following restrictions:

a) All parameters shall be within the approved range at all times.
b) Power adjustment shall start from the initial value selected with the algorithm described in 6.3.9.5 unless a valid power setting is available from nonvolatile storage, in which case this value may be used as the starting point.
c) Power adjustment shall be capable of being reduced or increased by the specified amount in response to RNG-RSP messages.

d) If, during initialization, power is increased to the maximum value $P_{TX\_IR\_MAX}$ (without a response from the BS) or to its maximum capability (without a response from the BS), it shall wrap back to the minimum.

On receiving a RNG-RSP, the SS shall not transmit until the RF signal has been adjusted in accordance with the RNG-RSP and has stabilized.

The message sequence chart (Table 182) and flow charts (Figure 93, Figure 94, Figure 95, Figure 97, and Figure 97) on the following pages define the CDMA initial ranging and adjustment process that shall be followed by compliant SSs and BSs.

Table 182—CDMA initial ranging and automatic adjustments procedure

BS		SS
[Time to send the CDMA initial ranging opportunity]		
Send map containing ranging region with a Broadcast Connection ID	----------UL-MAP---------->	
	<---------Ranging code-------	Transmit randomly selected initial ranging code in a randomly selected ranging slot from available ranging region
[Receive ranging code]		
Send RNG-RSP with time and power corrections and original ranging code and ranging slot Status = Continue	----------RNG-RSP------->	
		Receive RNG-RSP message with ranging code and ranging slot matching sent values Adjust time and power parameters
[Time to send the CDMA initial ranging opportunity]		
Send map containing ranging region with a Broadcast Connection ID	----------UL-MAP---------->	
	<---------Ranging code-------	Transmit randomly selected initial ranging code in a randomly selected ranging slot from available periodic ranging region
[Receive ranging code]		

Table 182—CDMA initial ranging and automatic adjustments procedure *(continued)*

BS		**SS**
Send RNG-RSP with time and power corrections and original ranging code and ranging slot Status = Success	----------RNG-RSP------->	
		Receive RNG-RSP message with ranging code and ranging slot matching sent values Adjust Time and Power parameters
[Time to send the next map]		
Send map containing anonymous bandwidth allocation with original ranging code and ranging slot	----------UL-MAP---------->	
	<---------RNG-REQ-------	Transmit RNG-REQ and continue with regular Initial network entry

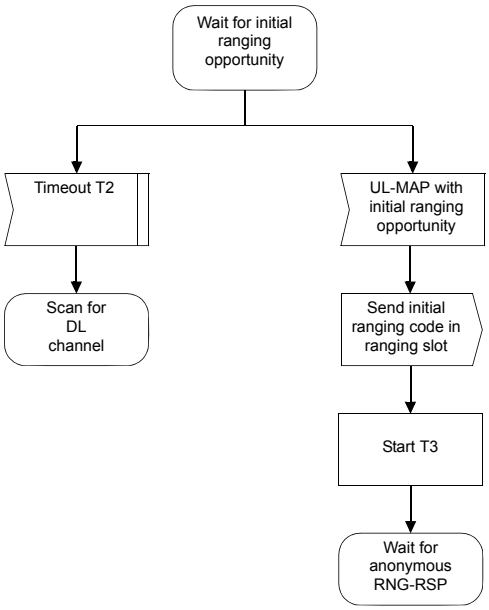

Figure 93—CDMA initial ranging—SS (part 1)

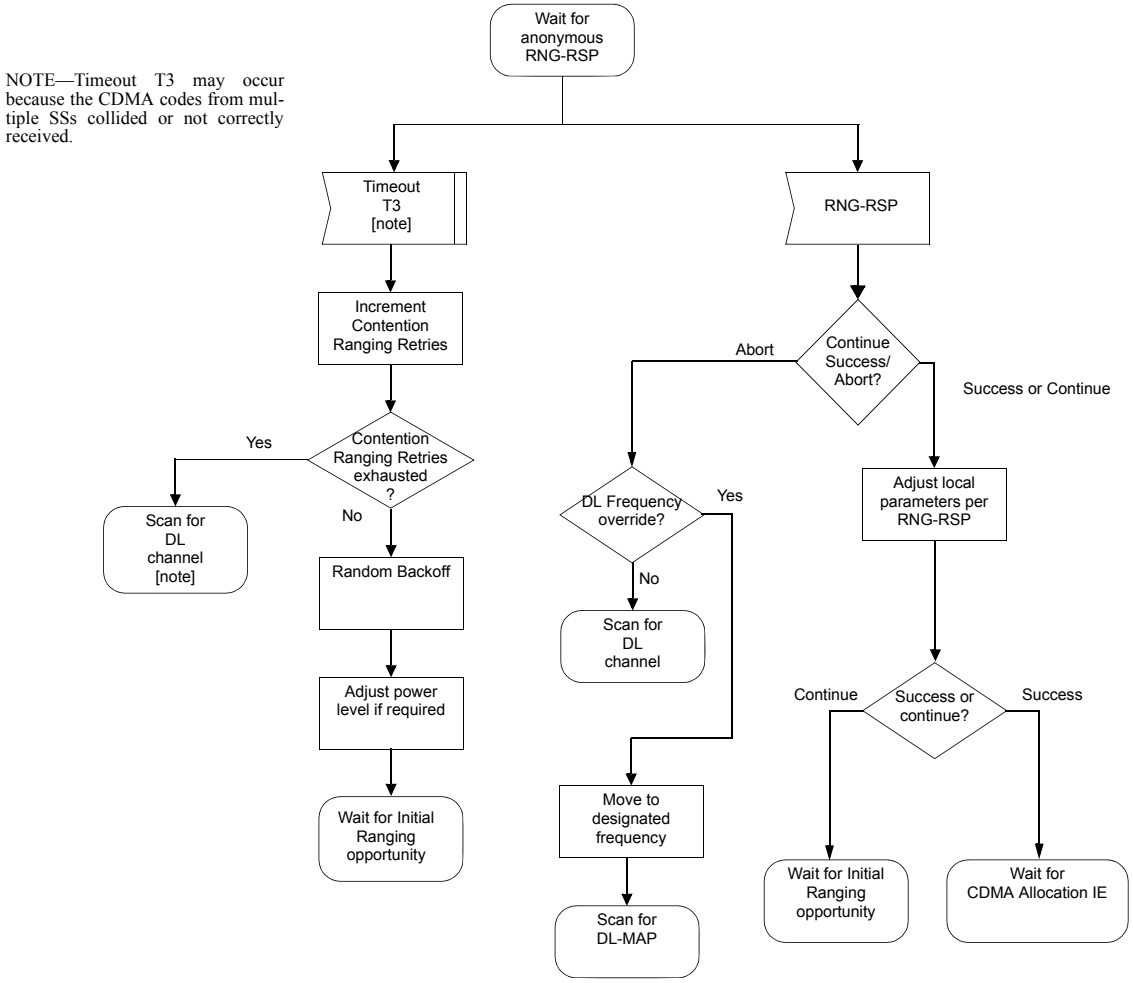

Figure 94—CDMA initial ranging—SS (part 2)

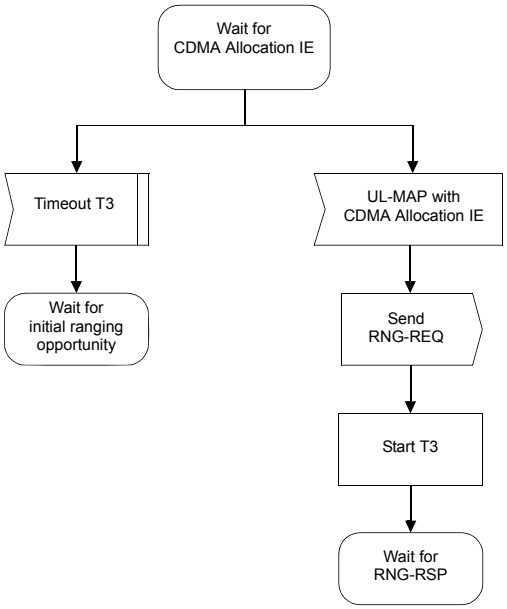

Figure 95—CDMA initial ranging—SS (part 3)

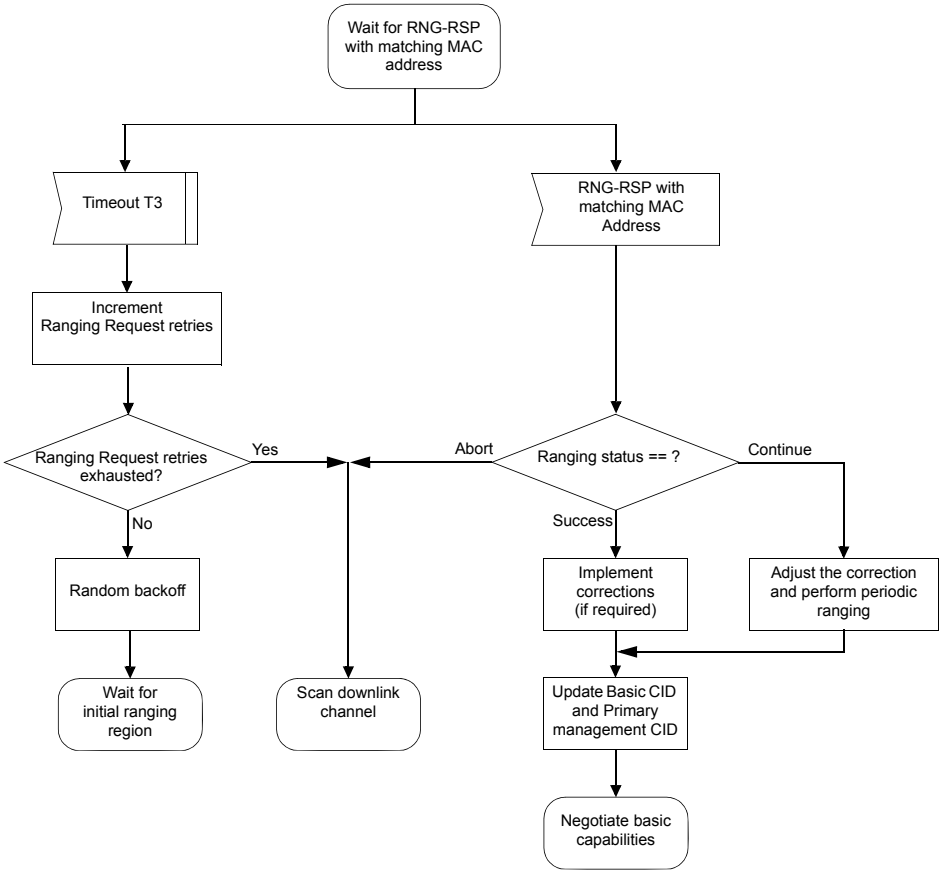

Figure 96—CDMA initial ranging—SS (part 4)

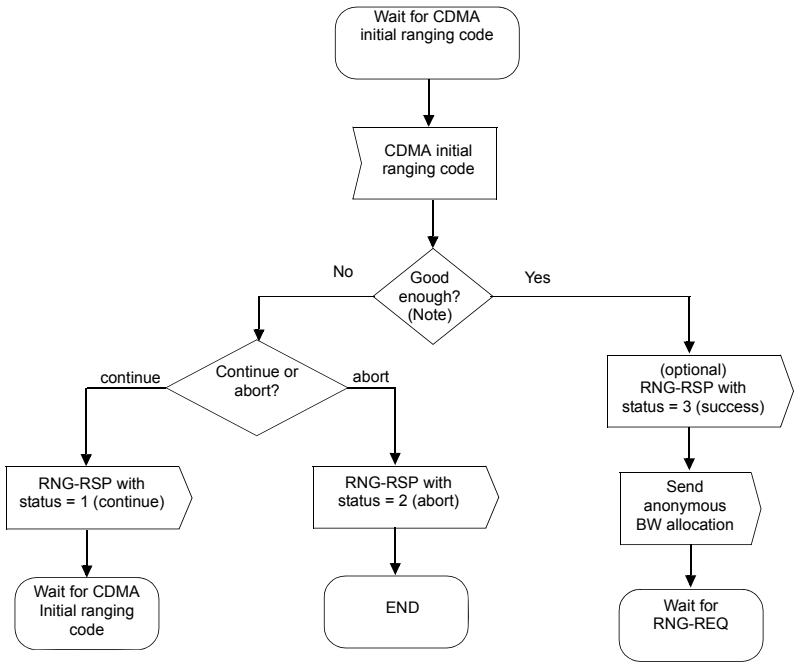

NOTE—Means ranging is within the tolerable limits of the BS.

Figure 97—Handle CDMA Initial Ranging Code at BS

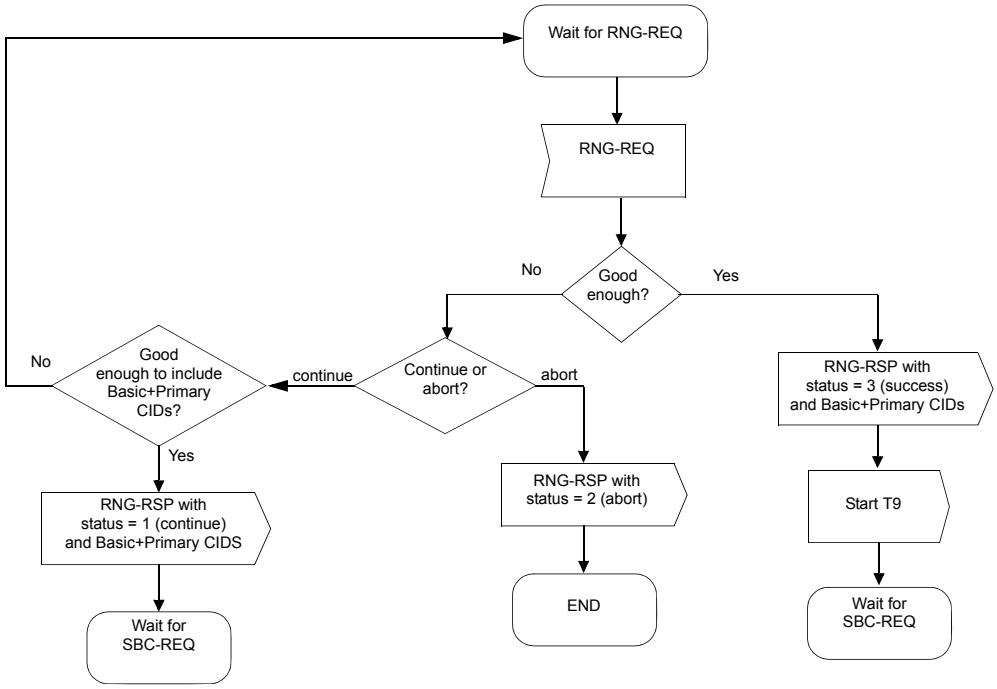

Figure 98—Handle RNG-REQ (OFDMA PHY only)

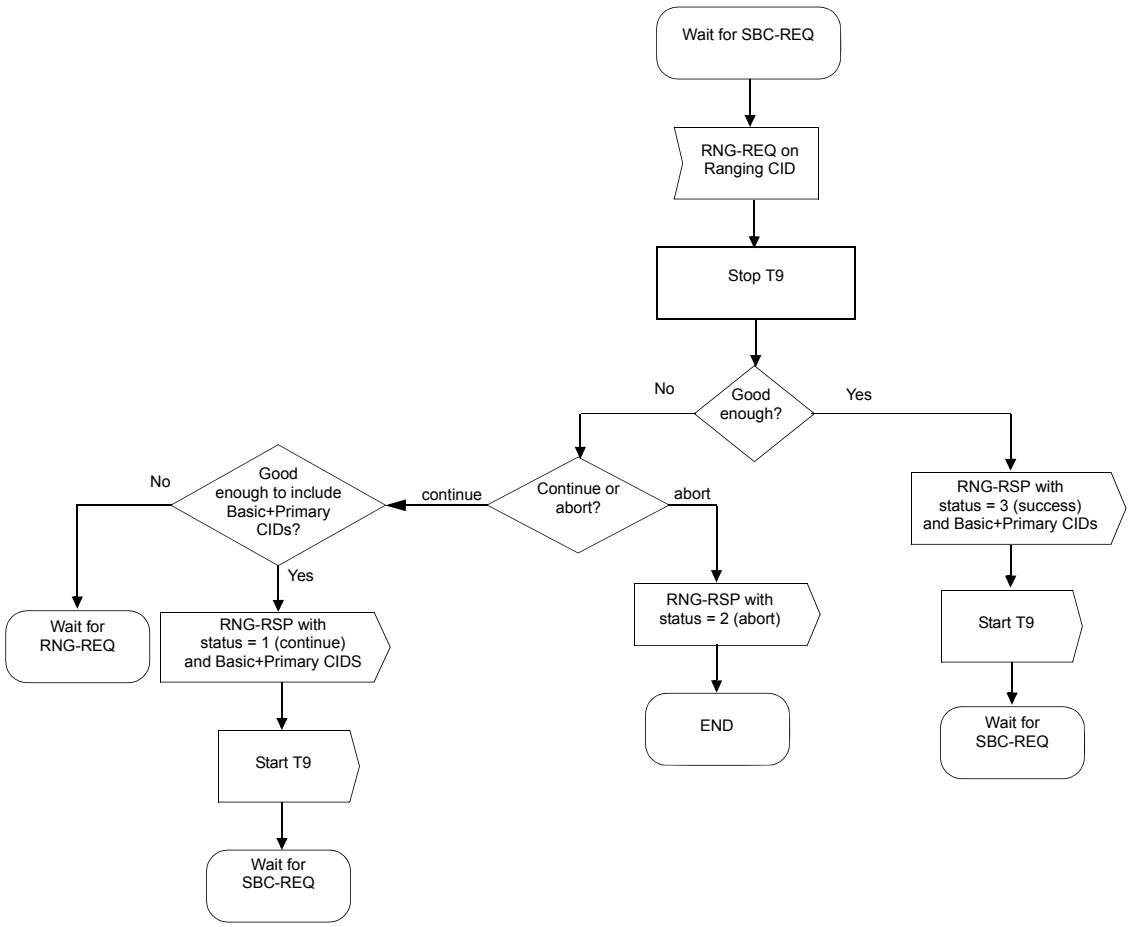

Figure 99—Handle RNG-REQ retransmission after MS T3 timeout (OFDMA PHY only)

6.3.10.3.2 Periodic ranging and automatic adjustments

An SS that wishes to perform periodic ranging shall take the following steps:

— The MS shall choose randomly a Ranging Slot (with random selection with equal probability from available Ranging Slots in a single frame) at the time to perform the ranging, then it chooses randomly a Periodic Ranging Code and sends it to the BS (as a CDMA code).

— If the MS does not receive a response, the MS may send a new CDMA code at the next appropriate periodic ranging transmission opportunity and adjust its power level up to $P_{TX\_IR\_MAX}$ (6.3.9.5.1).

— The BS cannot tell which MS sent the CDMA ranging request; therefore, upon successfully receiving a CDMA periodic ranging code, the BS broadcasts a ranging response message that advertises the received periodic ranging code as well as the ranging slot (OFDMA symbol number, subchannel, etc.) where the CDMA periodic ranging code has been identified. This information is used by the SS that sent the CDMA periodic ranging code to identify the ranging response message that corresponds to its ranging request. The ranging response message contains all the needed adjustment (e.g., time, power, and possibly frequency corrections) and a status notification.

— Upon receiving a Ranging Response message with continue status, the MS shall continue the ranging process with further periodic ranging codes randomly chosen. Upon receiving a RNG-RSP message with success status, the MS shall restart timer T4.

— Using the OFDMA ranging mechanism, the periodic ranging timer is controlled by the MS, not the BS.
— The BS may send an unsolicited RNG-RSP as a response to a CDMA-based bandwidth-request or any other data transmission from the MS.
— Upon timeout of MS internal T4 timer, the MS shall perform Periodic Ranging according to previous procedure.

When the SS receives an unsolicited RNG-RSP message, it shall reset the periodic ranging timer and adjust the parameters (timing and power, etc.) as notified in the RNG-RSP message.

The flow charts (Figure 100, Figure 101, and Figure 102) and message sequence chart (Table 183) on the following pages define the CDMA periodic ranging and adjustment process that shall be followed by compliant SSs and BSs.

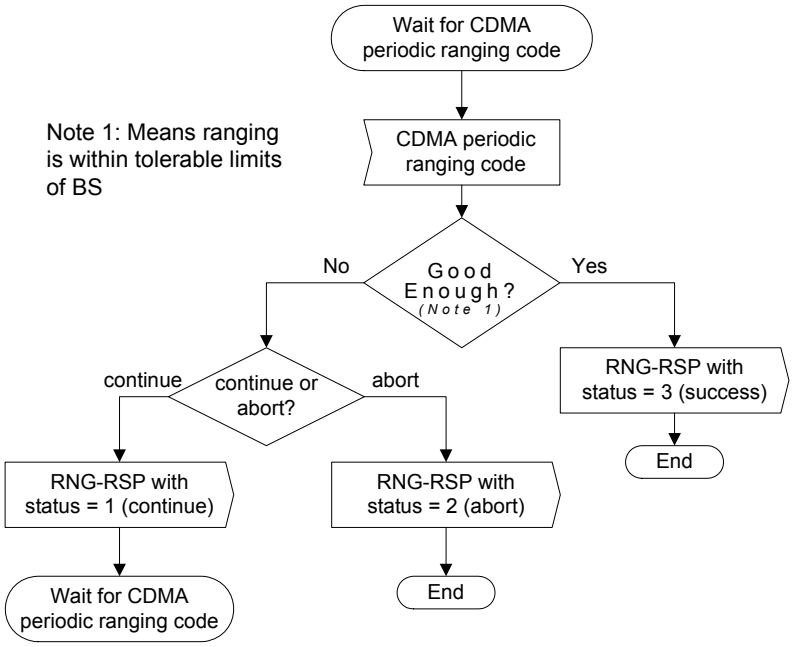

Figure 100—Processing CDMA periodic ranging code at BS

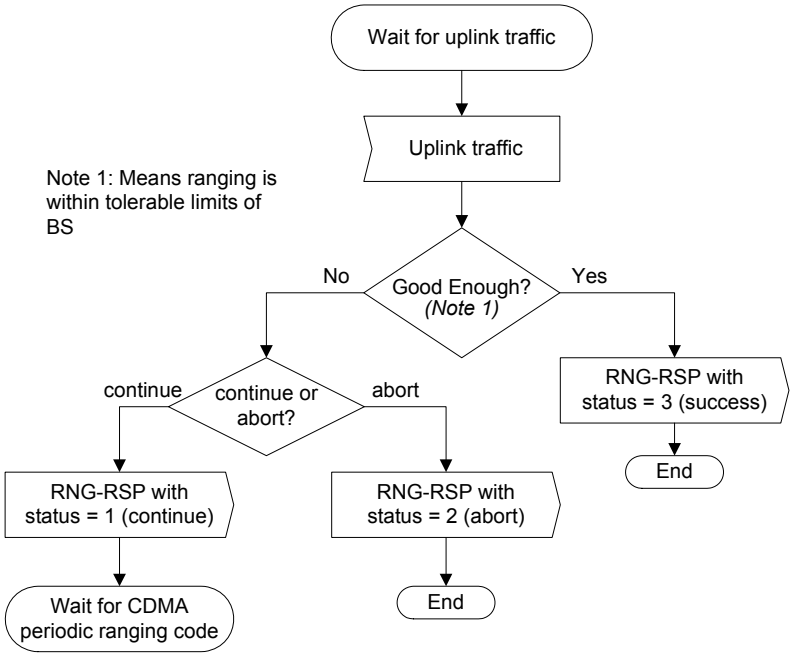

Figure 101—Unsolicited RNG-RSP at BS

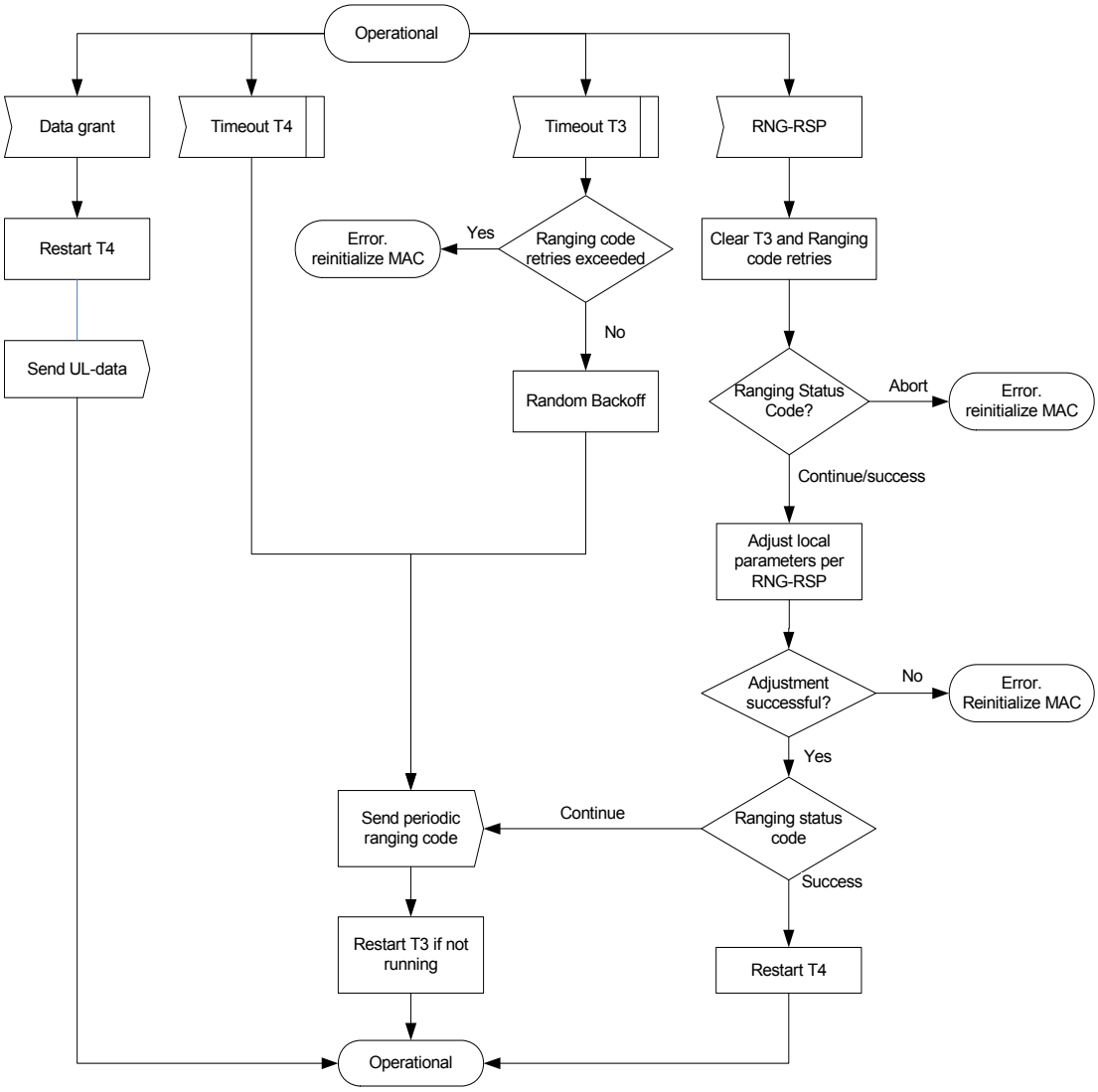

Figure 102—Periodic CDMA ranging—SS

Table 183 describes the ranging adjustment process.

Table 183—CDMA periodic ranging and automatic adjustments procedure

BS		SS
[time to send next map] Send map containing ranging region information	----------UL-MAP---------->	
	<---------Ranging code-------	Transmit randomly selected ranging code in a randomly selected ranging slot from available ranging region
[Receive ranging code] Send ranging response with time and power corrections and original ranging code and ranging slot Status = Continue	----------RNG-RSP------->	
		Receive RNG-RSP message with ranging code and ranging slot matching sent values Adjust time and power parameters State = Continue
[time to send next map] Send map containing ranging region information	----------UL-MAP---------->	
	<---------Ranging code-------	Transmit randomly selected ranging code in a randomly selected ranging slot from available ranging region
[Receive ranging code] Send ranging response with time and power corrections and original ranging code and ranging slot Status = Success	----------RNG-RSP------->	
		Receive RNG-RSP message with ranging code and ranging slot matching sent values Adjust time and power parameters State = Success

6.3.10.4 CDMA HO ranging and automatic adjustment

An MS that wishes to perform HO ranging shall take a process similar to that defined in the initial ranging section with the following modifications.

In CDMA HO ranging process, the random selection is used instead of random backoff and the CDMA HO ranging code is used instead of the initial ranging code. The code is selected from the HO ranging domain as defined in 8.4.7.3.

Alternatively, if the BS is prenotified for the upcoming HO MS, it may provide bandwidth allocation information to the MS using Fast Ranging IE to send a RNG-REQ message.

6.3.10.4.1 Dedicated ranging and automatic adjustments

A dedicated ranging is an optional initial ranging that can be used to expedite the ranging process when the ranging is performed as an initial step of a certain procedure such as location determination, coordinated association during scanning, location update in idle mode, etc. For a dedicated ranging, BS will provide dedicated ranging information and allocate the dedicated ranging region at a pre-defined "rendezvous time," in terms of relative frame number. The BS will also assign the following:

— A unique code number (from within the initial ranging codeset)
— A transmission opportunity within the allocated region (in terms of offset from the start of the region)

The BS may assign the same code or transmission opportunity to more than one MS, but not both. In case all allocated transmission opportunities in current region are different, there is no potential for collision of transmissions from different MSs. In case the BS allocates the same transmission opportunity to several MSs, there is some probability of collision and then BS may fail to identify transmitted codes.

The BS will provide the dedicated ranging information via MAC management messages, which are different according to the procedures for which the dedicated ranging is used.

When the "Dedicated ranging indicator" is set to 1, the ranging region will be allocated via UIUC=12 in the UL-MAP.

When the "Dedicated ranging indicator" is set to 1, then the ranging region and ranging method defined could be used for the purpose of ranging using dedicated CDMA code and transmit opportunity assigned in the unsolicited RNG-RSP message (for location determination of MS) or in the MOB_SCN-RSP message (for coordinated association).

MSs registered to this BS are prohibited from use of the named ranging region.

Upon receiving one of aforementioned messages which include the dedicated ranging information, the MS should interpret the provided rendezvous time, dedicated code, and transmission opportunity as follows:

— "Rendezvous time" specified the frame in which the BS will transmit a UL-MAP containing the definition of the dedicated ranging region where the MS can use the assigned CDMA ranging code. "Rendezvous time" is provided in units of frames, beginning at the frame where the MAC management message that includes the dedicated ranging information is transmitted.
— The MS shall read the UL-MAP transmitted at the first frame immediately following the rendezvous time and extract the description of the dedicated ranging region (ranging region with "Dedicated ranging indicator" bit set to 1). The MS shall determine the specific region it should use for transmission of the dedicated CDMA code by applying the offset defined by the "transmission opportunity offset" field in the management message, which was received from the BS, to the dedicated ranging region definition in the UL-MAP of the BS. In case the BS decides to provide a

regular (non-dedicated) ranging region with "Dedicated ranging indicator" set to 0, the MS may transmit the allocated CDMA code in the regular ranging region.

— If the MS could not obtain UL-MAP at the first frame immediately following the rendezvous time, it shall abort the dedicated ranging process. The MS may perform a contention-based ranging process as described in 6.3.10.3.1.

6.3.11 Update of channel descriptors

The channel descriptors (i.e., the UCD and DCD messages) are transmitted at regular intervals by the BS. Each descriptor contains the Configuration Change Count, which shall remain unchanged as long as the channel descriptor remains unchanged. All UL-MAP and DL-MAP messages allocating transmissions and receptions using burst profiles defined in a channel descriptor with a given Configuration Change Count value shall have a UCD/DCD Count value equal to the Configuration Change Count of the corresponding channel descriptor.

The procedure to transition from one generation of the channel descriptors (and, as a consequence, the set of burst profiles) to the next is shown in Table 184 and Table 185, for the UL and DL, respectively. The Configuration Change Count shall be incremented by 1 modulo 256 for every new generation of channel descriptor. After issuing a DL-MAP or UL-MAP message with the Configuration Change Count equal to that of the new generation, the old channel descriptor ceases to exist and the BS shall not issue UL-MAP and DL-MAP messages referring to it. When transitioning from one generation to the next, the BS shall schedule the transmissions of the UCD and DCD messages in such a way that each terminal has the possibility to hear it at least once.

Table 184—UCD update

BS		SS
send UL-MAP with UCD Count = *i*	----------UL-MAP---------->	descriptor with UCD Count = *i* previously stored in SS
	<----------data----------	Transmit using burst profiles defined in UCD with Configuration Change Count = *i*
[change of channel descriptor commanded]		
send UL-MAP with UCD Count = *i*	----------UL-MAP---------->	descriptor with Configuration Change Count = *i* still stored in SS
send UCD message with Configuration Change Count = (*i*+1 MOD 256)	----------UCD---------->	store new descriptor with Configuration Change Count = (*i*+1 MOD 256)
	<----------data----------	Transmit using burst profiles defined in UCD with Configuration Change Count = *i*
send UL-MAP with UCD Count = *i*	----------UL-MAP---------->	descriptor with Configuration Change Count = *i* still stored in SS
Retransmit UCD message with Configuration Change Count = (*i*+1 MOD 256) [UCD transition interval start]	----------UCD---------->	store new descriptor with Configuration Change Count = (*i*+1 MOD 256)

Table 184—UCD update *(continued)*

BS		SS
	<----------data----------	Transmit using burst profiles defined in UCD with Configuration Change Count = *i*
send UL-MAP with UCD Count = *i*	----------UL-MAP---------->	descriptor with UCD Count = *i* previously stored in SS
	<----------data----------	Transmit using burst profiles defined in UCD with Configuration Change Count = *i*
[UCD transition interval expired]		
send UL-MAP with UCD Count = (*i*+1 MOD 256)	----------UL-MAP---------->	delete descriptor with Configuration Change Count = *i*
	<----------data----------	Transmit using burst profiles defined in UCD with Configuration Change Count = (*i*+1 MOD 256)

Table 185—DCD update

BS		SS
send DL-MAP with DCD Count = *i*	----------DL-MAP---------->	descriptor with Configuration Change Count = *i* previously stored in SS
Transmit using burst profiles defined in DCD with Configuration Change Count = *i*	----------data---------->	Receive using burst profiles defined in DCD with Configuration Change Count = *i*
[change of channel descriptor commanded]		
send DL-MAP with DCD Count = *i*	----------DL-MAP---------->	descriptor with Configuration Change Count = *i* still stored in SS
send DCD message with Configuration Change Count = (*i*+1 MOD 256)	----------DCD---------->	store new descriptor with Configuration Change Count = (*i*+1 MOD 256)
Transmit using burst profiles defined in DCD with Configuration Change Count = *i*	----------data---------->	Receive using burst profiles defined in DCD with Configuration Change Count = *i*
send DL-MAP with DCD Count = *i*	----------DL-MAP---------->	descriptor with Configuration Change Count = *i* still stored in SS
Retransmit DCD message with Configuration Change Count = (*i*+1 MOD 256) [DCD transition interval start]	----------DCD---------->	store new descriptor with Configuration Change Count = (*i*+1 MOD 256)

Table 185—DCD update *(continued)*

BS		SS
Transmit using burst profiles defined in DCD with Configuration Change Count = *i*	----------data---------->	Receive using burst profiles defined in DCD with Configuration Change Count = *i*
[DCD transition interval expired]		
send DL-MAP with Configuration Change Count = (*i*+1 MOD 256)	----------DL-MAP---------->	delete descriptor with Configuration Change Count = *i*
Transmit using burst profiles defined in DCD with Configuration Change Count = *i*+1	----------data---------->	Receive using burst profiles defined in DCD with Configuration Change Count = (*i*+1 MOD 256)

6.3.12 Assigning SSs to multicast groups

The BS may add an SS to a multicast polling group by sending an MCA-REQ message with the Join command. Upon receiving an MCA-REQ message, the SS shall respond by sending an MCA-RSP message. The protocol is shown in Figure 103 and Figure 104.

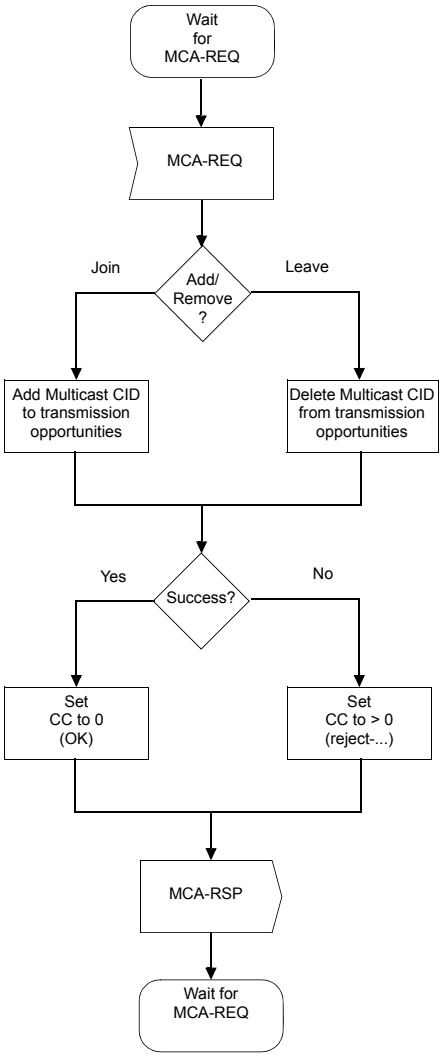

Figure 103—Multicast polling assignment—SS

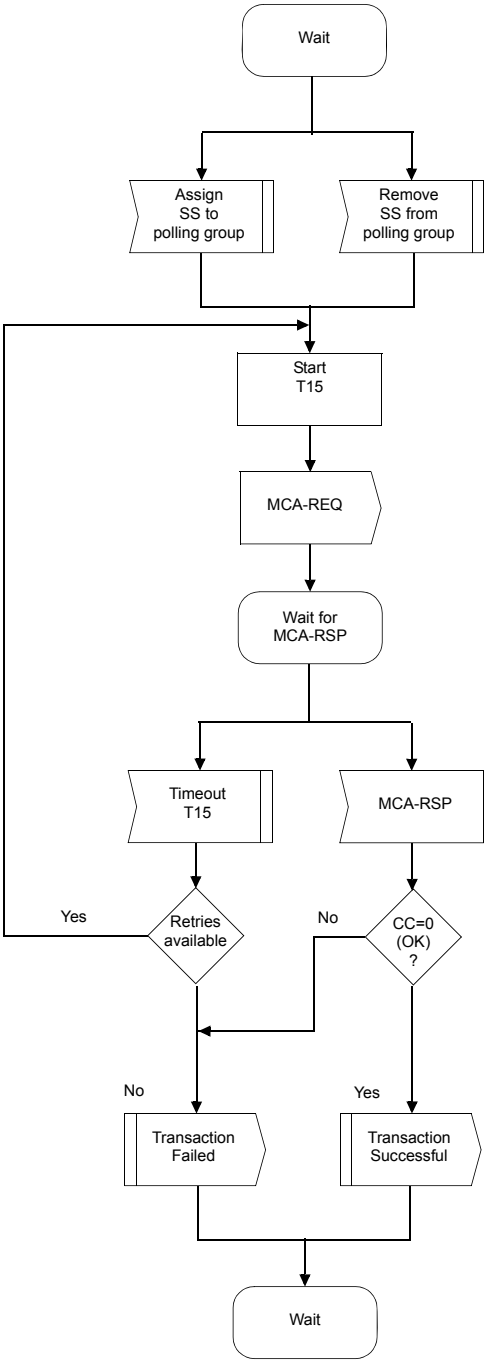

Figure 104—Multicast polling assignment—BS

6.3.13 Establishment of multicast connections

The BS may establish a DL multicast and broadcast service by creating a multicast connection with each SS to be associated with the service. Any available traffic CID value may be used for the service (i.e., there are no dedicated CIDs for multicast transport connections). To ensure proper multicast operation, the CID used for the service is the same for all SSs on the same channel that participate in the connection. The SSs need not be aware that the connection is a multicast connection. However, for multicast and broadcast services which utilize MBS specific features, the multicast connection shall be established using a multicast CID

The data transmitted on the connection with the given CID shall be received and processed by the MAC of each involved SS. Thus, each multicast or broadcast SDU is transmitted only once per BS channel. Since a multicast connection is associated with a service flow, it is associated with the QoS and traffic parameters for that service flow.

ARQ is not applicable to multicast connections.

If a DL multicast connection is to be encrypted, each SS participating in the connection shall have an additional security association (SA), allowing that connection to be encrypted using keys that are independent of those used for other encrypted transmissions between the SSs and the BS.

6.3.14 Quality of service (QoS)

This standard defines several QoS-related concepts. These include the following:

a) Service flow QoS scheduling
b) Dynamic service establishment
c) Two-phase activation model

6.3.14.1 Theory of operation

The various protocol mechanisms described in this document may be used to support QoS for both UL and DL traffic through the SS and the BS. This subclause provides an overview of the QoS protocol mechanisms and their part in providing end-to-end QoS.

The requirements for QoS include the following:

a) A configuration and registration function for preconfiguring SS-based QoS service flows and traffic parameters.
b) A signaling function for dynamically establishing QoS-enabled service flows and traffic parameters.
c) Utilization of MAC scheduling and QoS traffic parameters for UL service flows.
d) Utilization of QoS traffic parameters for DL service flows.
e) Grouping of service flow properties into named service classes, so upper-layer entities and external applications (at both the SS and BS) may request service flows with desired QoS parameters in a globally consistent way.

The principal mechanism for providing QoS is to associate packets traversing the MAC interface into a service flow as identified by the Transport CID. A service flow is a unidirectional flow of packets that is provided a particular QoS. The SS and BS provide this QoS according to the QoS parameter set defined for the service flow.

The primary purpose of the QoS features defined here is to define transmission ordering and scheduling on the air interface. However, these features often need to work in conjunction with mechanisms beyond the air interface in order to provide end-to-end QoS or to police the behavior of SSs.

Service flows exist in both the UL and DL direction and may exist without actually being activated to carry traffic. All service flows have a 32-bit SFID; admitted and active service flows also have a 16-bit CID.

6.3.14.2 Service flows

A service flow is a MAC transport service that provides unidirectional transport of packets either to UL packets transmitted by the SS or to DL packets transmitted by the BS.[16] A service flow is characterized by a set of QoS parameters such as latency, jitter, and throughput assurances. In order to standardize operation between the SS and BS, these attributes include details of how the SS requests UL bandwidth allocations and the expected behavior of the BS UL scheduler.

A service flow is partially characterized by the following attributes:[17]

a) *Service Flow ID:* An SFID is assigned to each existing service flow. The SFID serves as the principal identifier for the service flow in the subscriber station. A service flow has at least an SFID and an associated direction.

b) *CID:* The connection identifier of the transport connection exists only when the service flow is admitted or active. The relationship between SFID and Transport CID, when present, is unique. An SFID shall never be associated with more than one Transport CID, and a Transport CID shall never be associated with more than one SFID.

c) *ProvisionedQoSParamSet:* A QoS parameter set provisioned via means outside of the scope of this standard, such as the network management system.

d) *AdmittedQoSParamSet:* Defines a set of QoS parameters for which the BS (and possibly the SS) are reserving resources. The principal resource to be reserved is bandwidth, but this also includes any other memory or time-based resource required to subsequently activate the flow.

e) *ActiveQoSParamSet:* Defines a set of QoS parameters defining the service actually being provided to the service flow. Only an active service flow may forward packets.

f) *Authorization Module:* A logical function within the BS that approves or denies every change to QoS parameters and classifiers associated with a service flow. As such, it defines an "envelope" that limits the possible values of the AdmittedQoSParamSet and ActiveQoSParamSet.

The relationship between the QoS parameter sets is as shown in Figure 105 and Figure 106. The ActiveQoSParamSet is always a subset[18] of the AdmittedQoSParamSet, which is always a subset of the authorized "envelope." In the dynamic authorization model, this envelope is determined by the Authorization Module (labeled as the AuthorizedQoSParamSet). In the provisioned authorization model, this envelope is determined by the ProvisionedQoSParamSet. It is useful to think of three types of service flows:

1) *Provisioned:* This type of service flow is known via provisioning by, for example, the network management system. Its AdmittedQoSParamSet and ActiveQoSParamSet are both null.

---

[16]A service flow, as defined here, has no direct relationship to the concept of a "flow" as defined by the IETF Integrated Services (intserv) Working Group (IETF RFC 2212). An intserv flow is a collection of packets sharing transport-layer endpoints. Multiple intserv flows can be served by a single service flow.

[17]Some attributes are derived from the above attribute list. The service class name is an attribute of the ProvisionedQoSParamSet. The activation state of the service flow is determined by the ActiveQoSParamSet. If the ActiveQoSParamSet is null, then the service flow is inactive.

[18]To say that QoS parameter set A is a subset of QoS parameter set B the following shall be true for all QoS parameters in A and B:

if (a smaller QoS parameter value indicates less resources, e.g., Maximum Traffic Rate)

A is a subset of B if the parameter in A is less than or equal to the same parameter in B

if (a larger QoS parameter value indicates less resources, e.g., Tolerated Grant Jitter)

A is a subset of B if the parameter in A is greater than or equal to the same parameter in B

if (the QoS parameter is not quantitative)

A is a subset of B if the parameter in A is equal to the same parameter in B

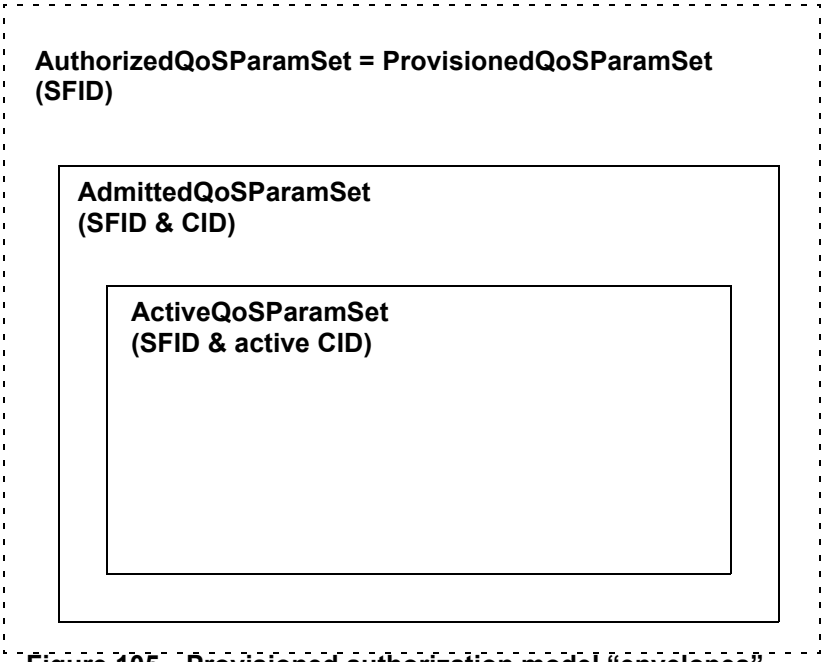

Figure 105—Provisioned authorization model "envelopes"

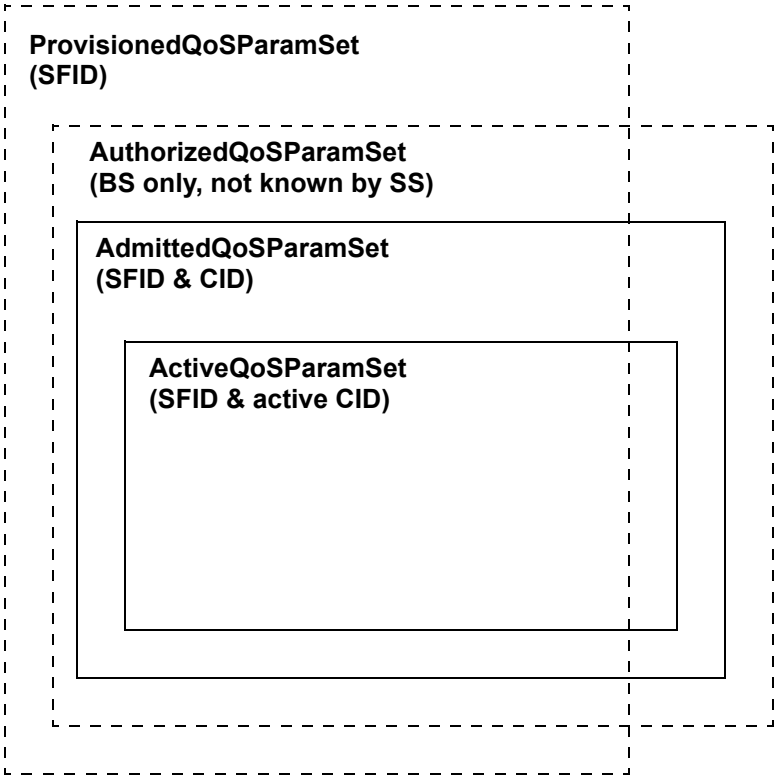

Figure 106—Dynamic authorization model "envelopes"

2) *Admitted:* This type of service flow has resources reserved by the BS for its AdmittedQoSParamSet, but these parameters are not active (i.e., its ActiveQoSParamSet is null). Admitted service flows may have been provisioned or may have been signalled by some other mechanism.
3) *Active:* This type of service flow has resources committed by the BS for its ActiveQoSParamSet, (e.g., is actively sending maps containing unsolicited grants for a UGS-based service flow). Its ActiveQoSParamSet is non-null.

6.3.14.3 Object model

The major objects of the architecture are represented by named rectangles in Figure 107. Each object has a number of attributes; the attribute names that uniquely identify it are underlined. Optional attributes are denoted with brackets. The relationship between the number of objects is marked at each end of the association line between the objects. For example, a service flow may be associated with from 0 to *N* (many) PDUs, but a PDU is associated with exactly one service flow. The service flow is the central concept of the MAC protocol. In the subscriber station, it is uniquely identified by a 32-bit (SFID). Service flows may be in either the UL or DL direction. There is a one-to-one mapping between admitted and active service flows (32-bit SFID) and transport connections (16-bit CID).

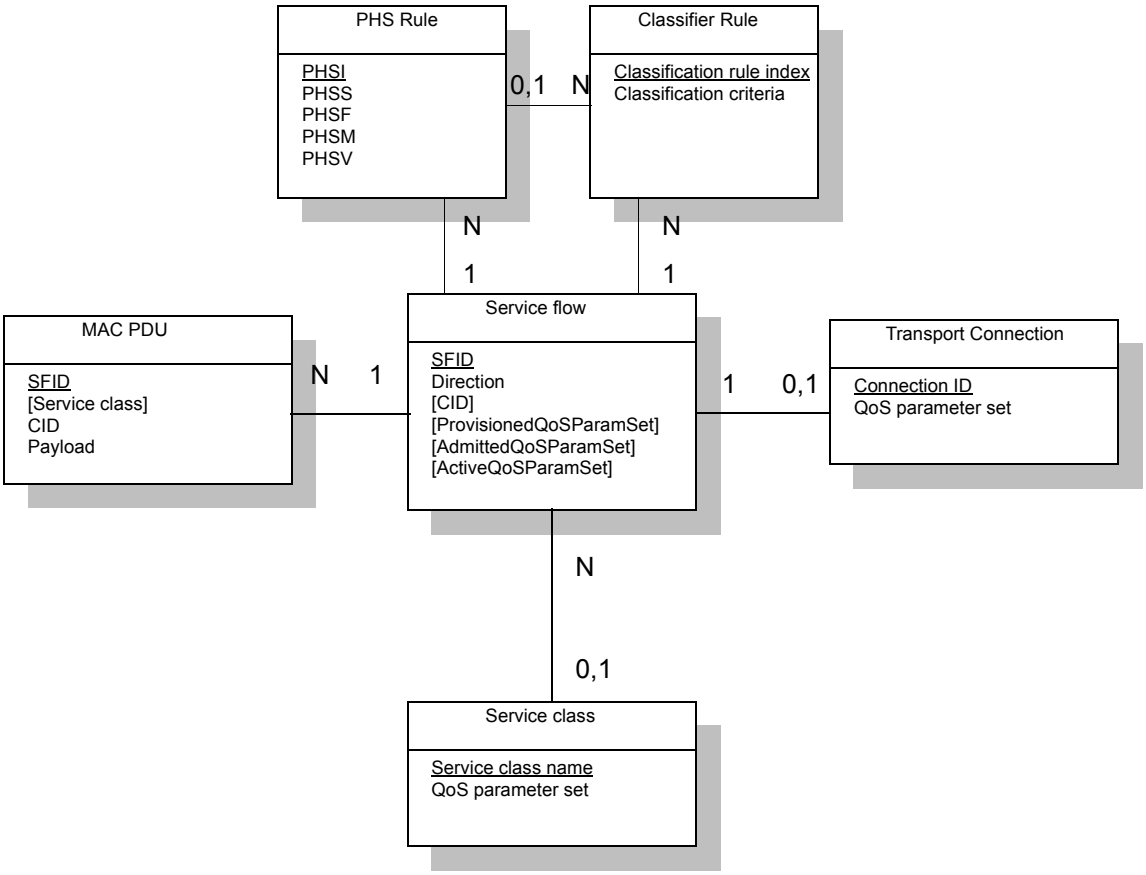

Figure 107—Theory of Operation Object Model

Outgoing user data is submitted to the MAC SAP by a CS process for transmission on the MAC interface. The information delivered to the MAC SAP includes the CID identifying the transport connection across which the information is delivered. The service flow for the connection is mapped to MAC transport connection identified by the CID.

A Classifier Rule uniquely maps a packet to its transport connection. The Classifier Rule is associated to zero or one PHS Rules. When creating a PHS Rule the associated Classifier Rule Index is used as a reference. A PHS Rule is associated to a single service flow. PHS Rules associated to the same service flow are uniquely identified by their PHSI. The Classifier Rule uniquely maps packets to its associated PHS Rule.

The service class is an optional object that may be implemented at the BS. It is referenced by an ASCII name, which is intended for provisioning purposes. A service class is defined in the BS to have a particular QoS parameter set. The QoS parameter sets of a service flow may contain a reference to the service class name as a "macro" that selects all of the QoS parameters of the service class. The service flow QoS parameter sets may augment and even override the QoS parameter settings of the service class, subject to authorization by the BS.

6.3.14.4 Service classes

The service class serves the following purposes:

a) It allows operators, who so wish, to move the burden of configuring service flows from the provisioning server to the BS. Operators provision the SSs with the service class name; the implementation of the name is configured at the BS. This allows operators to modify the implementation of a given service to local circumstances without changing SS provisioning. For example, some scheduling parameters may need to be tweaked differently for two different BSs to provide the same service. As another example, service profiles could be changed by time of day.
b) It allows higher layer protocols to create a service flow by its service class name. For example, telephony signaling may direct the SS to instantiate any available provisioned service flow of class "G711."

NOTE—Service classes are merely IDs for a specific set of QoS parameter set values. Hence, the use of service classes is optional. A service identified by a service class is treated no differently, once established, than a service that has the same QoS parameter set explicitly specified.

Any service flow may have its QoS parameter set specified in any of the following three ways:

— By explicitly including all traffic parameters.
— By indirectly referring to a set of traffic parameters by specifying a service class name.
— By specifying a service class name along with modifying parameters.

The service class name is "expanded" to its defined set of parameters at the time the BS successfully admits the service flow. The service class expansion can be contained in the following BS-originated messages: DSA-REQ, DSC-REQ, DSA-RSP, and DSC-RSP. In all of these cases, the BS shall include a service flow encoding that includes the service class name and the QoS parameter set of the service class. If an SS-initiated request contained any supplemental or overriding service flow parameters, a successful response shall also include these parameters.

When a service class name is given in an admission or activation request, it is possible that the returned QoS parameter set may change from activation to activation. This can happen because of administrative changes to the service class's QoS parameter set at the BS. If the definition of a service class name is changed at the BS (e.g., its associated QoS parameter set is modified), it has no effect on the QoS parameters of existing service flows associated with that service class. A BS may initiate DSC transactions to existing service flows that reference the service class name to affect the changed service class definition.

When an SS uses the service class name to specify the admitted QoS parameter set, the expanded set of TLV encodings of the service flow shall be returned to the SS in the response message (DSA-RSP or DSC-RSP). Use of the service class name later in the activation request may fail if the definition of the service class name has changed and the new required resources are not available. Thus, the SS should explicitly request the expanded set of TLVs from the response message in its later activation request.

6.3.14.4.1 Global service classes

Networks require common definitions of service class names and associated AuthorizedQoSParamSets in order to facilitate operation across a distributed topology. Global service class names shall be supported to enable operation in this context.

In operation, global service class names are employed as a baseline convention for communicating AuthorizedQoSParamSet or AdmittedQoSParamSet. Global service class name is similar in function to service class name except that

— Global service class name use may not be modified by a BS.
— Global service class names remain consistent among all BS.
— Global service class names are a rules-based naming system whereby the global service class name itself contains referential QoS parameter codes.

In practice, global service class names are intended to be accompanied by extending or modifying QoS Param Set defining parameters, as needed, to provide a complete and expedited method for transferring AuthorizedQoSParamSet or AdmittedQoSParamSet information.

Global service class name is a rules-based, composite name parsed in a variable number of information fields of format,

for I=1, format is ISBRLSPS1R and length is five bytes;
for I=0 and S2=0 or 1, format is ISBRLSPS1S2R and length is five bytes;
for I=0 and S2=2 or 3, format is ISBRLSPS1S2S3R and length is six bytes;
for I=0 and S2=4, format is ISBRLSPS1S2S3S5R and length is six bytes;
for I=0 and S2=5, format is ISBRLSPS1S2L1S3S4R and length is seven bytes;
for I=0 and S2=6, format is ISBRLSPS1S2L1S4R and length is seven bytes;

where elements reference extensible lookup tables. Each information field placeholder shall be an expressed value obtained from Table 186, as part of the name depending on values of fields indicating its availability, and shall not be omitted.

Table 186—Global service class name information field parameters

Position	Name	Size (bit)	Value
I	Uplink/Downlink Indicator	1	0 = UL; 1 = DL
S	Maximum Sustained Traffic Rate	6	Extensible look-up Table 187 (value 0b111111 indicates TLV to follow)
B	Maximum Traffic Burst	6	Extensible look-up Table 187 (value 0b111111 indicates TLV to follow)
R	Minimum Reserved Traffic Rate	6	Extensible look-up Table 187 (value 0b111111 indicates TLV to follow)
L	Maximum Latency	6	Extensible look-up Table 188 (value 0b111111 indicates TLV to follow)
S	Fixed-Length Versus Variable-length SDU Indicator	1	0 = Variable length; 1 = Fixed length

Table 186—Global service class name information field parameters *(continued)*

Position	Name	Size (bit)	Value
P	Paging Preference	1	0 = No paging generation 1 = Paging generation
S1	Request/Transmission Policy	8	(Refer to 11.13.11)
S2	Uplink Grant Scheduling Type	3	(Refer to 11.13.10) 1—Undefined 2 = BE 3 = nrtPS 4 = rtPS, 5 = ertPS 6 = UGS This field is included when I=0
L1	Tolerated Jitter	6	Extensible look-up Table (value 0b111111 indicates TLV to follow). This is available only for Uplink Grant Scheduling Type = ertPS, or UGS. This field is included when I=0 and S2=5 or 6.
S3	Traffic Priority	3	(Refer to 11.13.5) This is used only for Uplink Grant Scheduling Type = rtPS, ertPS, nrtPS or BE. This field in included when I=0 and S2=2 or 3 or 4 or 5.
S4	Unsolicited Grant Interval	6	Extensible look-up Table (value 0b111111 indicates TLV to follow) This is available only for Uplink Grant Scheduling Type = ertPS, or UGS. This field is included when I=0 and S2=5 or 6.
S5	Unsolicited Polling Interval	6	Extensible look-up Table (value 0b111111 indicates TLV to follow). This is available only for Uplink Grant Scheduling Type = rtPS. This field is included when I=0 and S2=4.
R	*Padding*	variable	Padding bits to ensure byte aligned. Shall be set to zero.

The global service class name parameters are as follows:

Uplink/Downlink Indicator

The Uplink/Downlink Indicator parameter identifies the defined service flow direction from the originating entity.

Maximum Sustained Traffic Rate

A parameter that defines the peak information rate of the service. The rate is expressed in bits per second and pertains to the service data units (SDUs) at the input to the system. Explicitly, this parameter does not include transport, protocol, or network overhead such as MAC headers or CRCs, or nonpayload session maintenance overhead like SIP, MGCP, H.323 administration, etc. This parameter does not limit the instantaneous rate of the service since this is governed by the physical attributes of the ingress port. However, at the destination network interface in the UL direction, the service shall be policed to conform to this parameter, on the average, over time. On the network in the DL direction, it may be assumed that the service was already policed at the ingress to the network. If this parameter is set to zero, then there is no explicitly mandated maximum rate. The maximum sustained traffic rate field specifies only a bound, not

a guarantee that the rate is available. The algorithm for policing this parameter is left to vendor differentiation and is outside the scope of the standard. See Table 187.

Table 187—Traffic rate and burst values

6-bit Code (binary)	Traffic rate (bit/s)	Burst values (bit)	6-bit Code (binary)	Traffic rate (bit/s)	Burst values (bit)
000000	No requirement	No requirement	010000	192000	192000
000001	1200	1200	010001	256000	256000
000010	2400	2400	010010	384000	384000
000011	4800	4800	010011	512000	512000
000100	9600	9600	010100	768000	768000
000101	14400	14400	010101	1024000	1024000
000110	19200	19200	010110	1536000	1536000
000111	24000	24000	010111	1921000	1921000
001000	26400	26400	011000–111110	*Reserved*	*Reserved*
001001	28000	28000			
001010	36000	36000	111111	TLV follows	TLV follows
001011	44000	44000			
001100	48000	48000			
001101	56000	56000			
001110	64000	64000			
001111	128000	128000			

Maximum traffic burst

The Maximum traffic burst parameter defines the maximum burst size that shall be accommodated for the service. Since the physical speed of ingress/egress ports, any air interface, and the backhaul will in general be greater than the maximum sustained traffic rate parameter for a service, this parameter describes the maximum continuous burst the system should accommodate for the service assuming the service is not currently using any of its available resources. Maximum traffic burst set to zero shall mean no Maximum traffic burst reservation requirement.

Minimum reserved traffic rate

The Minimum reserved traffic rate parameter specifies the minimum rate, in bits per second, reserved for this service flow. The BS shall be able to satisfy BRs for a connection up to its minimum reserved traffic rate. If less bandwidth than its Minimum reserved traffic rate is requested for a connection, the BS may reallocate the excess reserved bandwidth for other purposes. The value of this parameter is calculated excluding MAC overhead. Minimum reserved traffic set to zero shall mean no minimum reserved traffic rate requirement.

Maximum latency

The value of this parameter specifies the maximum interval between the reception of a packet at the CS of the BS or the SS and the forwarding of the SDU to its Air Interface. If defined, this parameter represents a service commitment and shall be guaranteed. A value of zero for Maximum latency shall be interpreted as no commitment. See Table 188.

Table 188—Maximum latency and tolerated jitter values

6-bit Code (binary)	Value (ms)	6-bit Code (binary)	Value (ms)	6-bit Code (binary)	Value (ms)
000000	No requirement	001000	50	010000	10000
000001	1	001001	100	010001 – 111110	*Reserved*
000010	2	001010	150		
000011	5	001011	200	111111	TLV follows
000100	10	001100	500		
000101	20	001101	1000		
000110	30	001110	2000		
000111	40	001111	5000		

SDU indicator

The value of this parameter specifies whether the SDUs on the service flow are fixed-length or variable-length.

Paging Preference

This parameter is a single bit indicator of an MS's preference for the reception of paging advisory messages during idle mode. When set, it indicates that the BS may present paging advisory messages or other indicative messages to the MS when data SDUs bound for the MS are present while the MS is in idle mode.

Uplink Grant Scheduling Type

This parameter specifies which Uplink grant scheduling service type is associated with uplink service flow (Refer to 11.13.10). This parameter is available in case of UL service flow with Uplink/Downlink indicator = 0 (i.e., uplink). Otherwise, it shall be set to '000' as no commitment.

Tolerated Jitter

The value of this parameter specifies the maximum delay variation (jitter) for the connection. This parameter is available in case of a DL or UL service flow, which are associated with Uplink Grant Scheduling Type = UGS or ertPS. Otherwise, it shall be set to '000000' as no commitment. If defined, this parameter represents a service commitment and shall be guaranteed. A value of zero for Maximum latency shall be interpreted as no commitment. (Refer to Table 188 and 11.13.12.)

Request/Transmission Policy

The value of this parameter specifies a certain attributes for the associated service flow. Each bit specifies each other action. (Refer to 11.13.11.)

Traffic Priority

The value of this parameter specifies the priority of associated service flow (refer to 11.13.5). This parameter is available in case of a DL or UL service flow, which are associated with any other Uplink Grant Scheduling Types except UGS.

Unsolicited Grant Interval

This parameter defines the nominal interval between successive data grant opportunities for a DL service flow, which are associated with Uplink Grant Scheduling Type = UGS or ertPS (refer to the Table 189 and 11.13.19). If this parameter is set to zero, then there is no explicitly mandated unsolicited grant interval. The maximum unsolicited grant interval field specifies only a bound, not a guarantee that the rate is available. The algorithm for policing this parameter is left to vendor differentiation and is outside the scope of the standard.

Unsolicited Polling Intervals

This parameter defines the maximal nominal interval between successive polling grants opportunities for a UL service flow, which are associated with Uplink Grant Scheduling Type = rtPS (refer to the Table 189 and 11.13.20). If this parameter is set to zero, then there is no explicitly mandated unsolicited grant interval. The maximum unsolicited polling interval field specifies only a bound, not a guarantee that the rate is available. The algorithm for policing this parameter is left to vendor differentiation and is outside the scope of the standard.

Table 189—Unsolicited Grant Intervals and Unsolicited Polling Intervals

6-bit Code (Binary)	Intervals (Frames)	6-bit Code (Binary)	Intervals (Frames)	6-bit Code (Binary)	Intervals (Frames)	6-bit Code (Binary)	Intervals (Frames)
000000	*reserved*	010000	16	100000	48	110000	160
000001	1	010001	18	100001	52	110001	170
000010	2	010010	20	100010	56	110010	180
000011	3	010011	22	100011	60	110011	190
000100	4	010100	24	100100	64	110100	200
000101	5	010101	26	100101	68	110101	*Reserved*
000110	6	010110	28	100110	72	110110	*Reserved*
000111	7	010111	30	100111	76	110111	*Reserved*
001000	8	011000	32	101000	80	111000	*Reserved*
001001	9	011001	34	101001	90	111001	*Reserved*
001010	10	011010	36	101010	100	111010	*Reserved*
001011	11	011011	38	101011	110	111011	*Reserved*
001100	12	011100	40	101100	120	111100	*Reserved*
001101	13	011101	42	101101	130	111101	*Reserved*
001110	14	011110	44	101110	140	111110	*Reserved*
001111	15	011111	46	101111	150	111111	TLV follows

6.3.14.5 Authorization

Every change to the service flow QoS parameters shall be approved by an authorization module. This includes every DSA-REQ message to create a new service flow and every DSC-REQ message to change a QoS parameter set of an existing service flow. Such changes include requesting an admission control decision (e.g., setting the AdmittedQoSParamSet) and requesting activation of a service flow (e.g., setting the ActiveQoSParamSet). Reduction requests regarding the resources to be admitted or activated are also checked by the authorization module.

In the static authorization model, the authorization module stores the provisioned status of all "deferred" service flows. Admission and activation requests for these provisioned service flows shall be permitted, as long as the admitted QoS parameter set is a subset of the provisioned QoS parameter set, and the active QoS parameter set is a subset of the admitted QoS parameter set. Requests to change the provisioned QoS parameter set shall be refused, as shall requests to create new dynamic service flows. This defines a static system where all possible services are defined in the initial configuration of each SS.

In the dynamic authorization model, the authorization module also communicates through a separate interface to an independent policy server. This policy server may provide the authorization module with advance notice of upcoming admission and activation requests, and it specifies the proper authorization action to be taken on those requests. Admission and activation requests from an SS are then checked by the Authorization Module to ensure that the ActiveQoSParamSet being requested is a subset of the set provided by the policy server. Admission and activation requests from an SS that are signalled in advance by the external policy server are permitted. Admission and activation requests from an SS that are not presignalled by the external policy server may result in a real-time query to the policy server or may be refused.

Prior to initial connection setup, the BS shall retrieve the provisioned QoS parameter set for an SS. This is handed to the Authorization Module within the BS. The BS shall be capable of caching the provisioned QoS parameter set and shall be able to use this information to authorize dynamic flows that are a subset of the provisioned QoS parameter set. The BS should implement mechanisms for overriding this automated approval process (such as described in the dynamic authorization model). For example it could

a) Deny all requests regardless of whether they have been preprovisioned.
b) Define an internal table with a richer policy mechanism but seeded by the Provisioned QoS Set.
c) Refer all requests to an external policy server.

6.3.14.6 Types of service flows

It is useful to think about three basic types of service flows. This subclause describes these three types of service flows in more detail. However, it is important to note that there are more than just these three basic types (see 11.13.4).

6.3.14.6.1 Provisioned service flows

A service flow may be provisioned but not immediately activated (sometimes called "deferred"). In other words, the description of any such service flow contains an attribute that provisions but defers activation and admission (see 11.13.4). The network assigns a SFID for such a service flow. The BS may also require an exchange with a policy module prior to admission.

As a result of external action beyond the scope of this specification, the SS may choose to activate a provisioned service flow by passing the SFID and the associated QoS parameter sets to the BS in the DSC-REQ message. If authorized and resources are available, the BS shall respond by mapping the service flow to a CID.

As a result of external action beyond the scope of this specification, the BS may choose to activate a service flow by passing the SFID as well as the CID and the associated QoS parameter sets to the SS in the DSC-REQ message. Such a provisioned service flow may be activated and deactivated many times (through DSC exchanges). In all cases, the original SFID shall be used when reactivating the service flow.

6.3.14.6.2 Admitted service flows

This protocol supports a two-phase activation model that is often utilized in telephony applications. In the two-phase activation model, the resources for a "call" are first "admitted," and then once the end-to-end negotiation is completed (e.g., called party's gateway generates an "off-hook" event), the resources are "activated." The two-phase model serves the following purposes:

1) Conserving network resources until a complete end-to-end connection has been established,
2) Performing policy checks and admission control on resources as quickly as possible, and in particular, before informing the far end of a connection request, and
3) Preventing several potential theft-of-service scenarios.

For example, if an upper-layer service were using UGS, and the addition of upper-layer flows could be adequately provided by increasing the Maximum Sustained Traffic Rate QoS parameter, then the following procedure might be used. When the first higher layer flow is pending, the SS issues a DSA-REQ with the admitted Maximum Sustained Traffic Rate parameter equal to that required for one higher layer flow, and the active Maximum Sustained Traffic Rate parameter equal to zero. Later when the higher layer flow becomes active, it issues a DSC-REQ with the instance of the active Maximum Sustained Traffic Rate parameter equal to that required for one higher layer flow. Admission control was performed at the time of the reservation, so the later DSC-REQ, having the active parameters within the range of the previous reservation, is guaranteed to succeed. Subsequent higher layer flows would be handled in the same way. If there were three higher layer flows establishing connections, with one flow already active, the service flow would have admitted Maximum Sustained Traffic Rate equal to that required for four higher layer flows, and active Maximum Sustained Traffic Rate equal to that required for one higher layer flow.

An activation request of a service flow where the new ActiveQoSParamSet is a subset of the AdmittedQoSParamSet shall be allowed, except in the case of catastrophic failure. An admission request where the AdmittedQoSParamSet is a subset of the previous AdmittedQoSParamSet, so long as the ActiveQoSParamSet remains a subset of the AdmittedQoSParamSet, shall succeed.

A service flow that has resources assigned to its AdmittedQoSParamSet, but whose resources are not yet completely activated, is in a transient state. It is possible in some applications that a long-term reservation of resources is necessary or desirable. For example, placing a telephone call on hold should allow any resources in use for the call to be temporarily allocated to other purposes, but these resources shall be available for resumption of the call later. The AdmittedQoSParamSet is maintained as "soft state" in the BS; this state shall be maintained without releasing the nonactivated resources. Changes may be signaled with a DSC-REQ message.

6.3.14.6.3 Active service flows

A service flow that has a non-NULL ActiveQoSParamSet is said to be an active service flow. It is requesting (according to its Request/Transmission Policy, as in 11.13.11) and being granted bandwidth for transport of data packets. An admitted service flow may be activated by providing an ActiveQoSParamSet, signaling the resources actually desired at the current time. This completes the second stage of the two-phase activation model (see 6.3.14.6.2).

A service flow may be provisioned and immediately activated. Alternatively, a service flow may be created dynamically and immediately activated. In this case, two-phase activation is skipped and the service flow is available for immediate use upon authorization.

6.3.14.7 Service flow creation

The provisioning of service flows is done via means outside of the scope of this standard, such as the network management system. During provisioning, a service flow is instantiated, gets a SFID and a "provisioned" type. For some service flows it may be specified that DSA procedure shall be activated by Network Entry procedure. Enabling service flows follows the transfer of the operational parameters, as shown in Figure 65. In this case, the service flow type may change to "admitted" or to "active." Thus, the service flow is mapped onto a certain connection.

Service flow encodings contain either a full definition of service attributes (omitting defaultable items if desired) or a service class name. A service class name is an ASCII string, which is known at the BS and which indirectly specifies a set of QoS parameters.

Triggers, other than network entry, also may cause creation, admission, or activation of service flows. Such triggers lay outside the scope of the standard.

Capability of handling each specific service flow parameter is optional.

6.3.14.7.1 Dynamic service flow creation

6.3.14.7.1.1 Dynamic service flow creation—SS-initiated

Creation of service flows may be initiated by either BS (mandatory capability) or by SS (optional capability).

The SS-initiated protocol is illustrated in Figure 108 and described in detail in 6.3.14.9.3.1.

A DSA-REQ from an SS contains a QoS parameter set (marked either for admission-only or for admission and activation).

BS responds with a DSA-RSP indicating acceptance or rejection. In the case when rejection was caused by presence of a nonsupported parameter of nonsupported value, specific parameter may be included into DSA-RSP. If the BS rejects a service flow due to absence of sufficient resources to admit the service flow (see Table 607, CC = 3), the BS may initiate procedures to move the SS to a different BS (see 6.3.21).

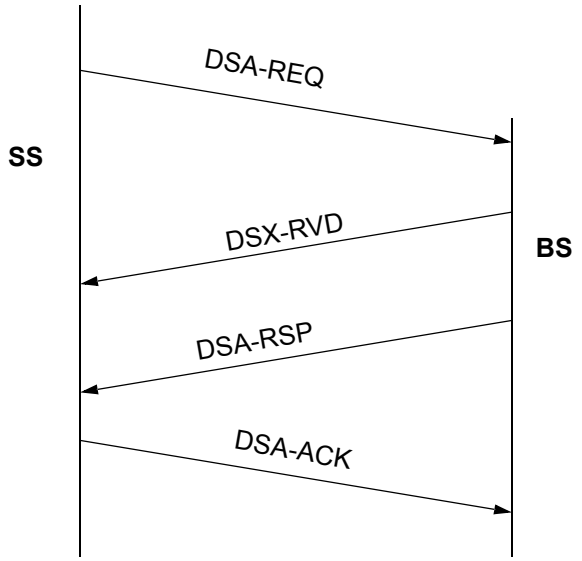

Figure 108—DSA message flow—SS-initiated

6.3.14.7.1.2 Dynamic service flow creation—BS-initiated

A DSA-REQ from a BS contains an SFID for either one UL or one DL service flow, possibly its associated CID, and a set of active or admitted QoS parameters. The protocol is illustrated in Figure 109 and is described in detail in 6.3.14.9.3.3.

SS responds with DSA-RSP indicating acceptance or rejection. In the case when rejection was caused by presence of nonsupported parameter of nonsupported value, specific parameter may be included into DSA-RSP.

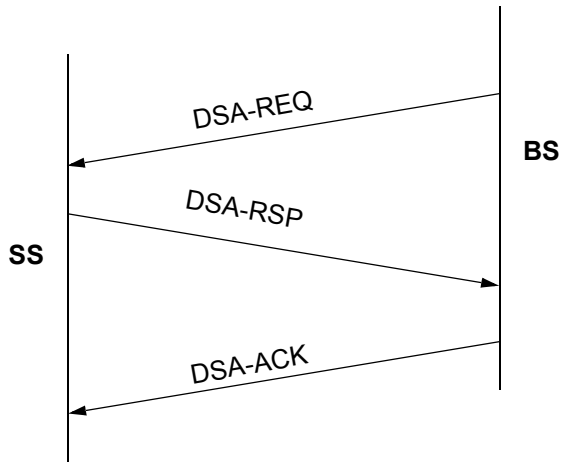

Figure 109—DSA message flow—BS-initiated

6.3.14.8 Dynamic service flow modification and deletion

In addition to the methods presented in 6.3.14.7 for creating service flows, protocols are defined for modifying and deleting service flows; see 6.3.14.9.4 and 6.3.14.9.5.

Both provisioned and dynamically created service flows are modified with the DSC message, which can change the admitted and active QoS parameter sets of the flow.

A successful DSC transaction changes a service flow's QoS parameters by replacing both the admitted and active QoS parameter sets. If the message contains only the admitted set, the active set is set to null and the flow is deactivated. If the message contains neither set ("000" value used for QoS parameter set type, see 11.13.4), then both sets are set to null and the flow is de-admitted. When the message contains both QoS parameter sets, the admitted set is checked first, and if admission control succeeds, the active set in the message is checked against the admitted set in the message to ensure that it is a subset. If all checks are successful, the QoS parameter sets in the message become the new admitted and active QoS parameter sets for the service flow. If either of the checks fails, the DSC transaction fails and the service flow QoS parameter sets are unchanged.

6.3.14.9 Service flow management

6.3.14.9.1 Overview

Service flows may be created, changed, or deleted. This is accomplished through a series of MAC management messages referred to as DSA, DSC, and DSD. The DSA messages create a new service flow.

The DSC messages change an existing service flow. The DSD messages delete an existing service flow. This is illustrated in Figure 110.

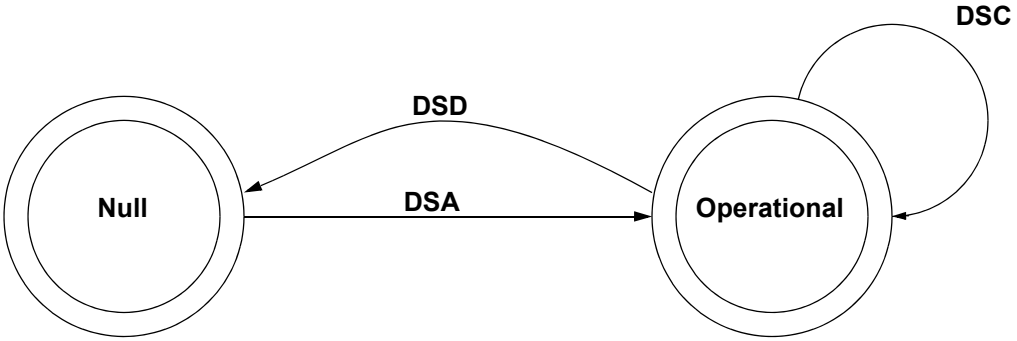

Figure 110—Dynamic service flow overview

The Null state implies that no service flow exists that matches the SFID and/or Transaction ID in a message. Once the service flow exists, it is operational and has an assigned SFID. In steady-state operation, a service flow resides in a Nominal state. When DSx messaging is occurring, the service flow may transition through other states, but remains operational. Since multiple service flows may exist, there may be multiple state machines active, one for every service flow. DSx messages only affect those state machines that match the SFID and/or Transaction ID. Both the SS and BS shall verify the HMAC-Digest on all DSx messages before processing them, and discard any messages that fail.

Transaction IDs are unique per transaction and are selected by the initiating device (SS or BS). To help prevent ambiguity and provide simple checking, the Transaction ID number space is split between the SS and BS. The SS shall select its Transaction IDs from the first half of the number space (0x0000 to 0x7FFF). The BS shall select its Transaction IDs from the second half of the number space (0x8000 to 0xFFFF).

Each DSx message sequence is a unique transaction with an associated unique transaction ID. The DSA/DSC transactions consist of a request/response/acknowledge sequence. The DSD transactions consist of a request/response sequence. The response messages shall return a CC of OK unless some exception condition was detected. The acknowledge messages shall return the CC in the response unless a new exception condition arises. A more detailed state diagram, including transition states, is shown in Figure 111 through Figure 117. The detailed actions for each transaction shall be given in the following subclauses.

6.3.14.9.2 Dynamic service flow state transitions

The Dynamic Service Flow state transition diagram (Figure 111) is the top-level state diagram and controls the general service flow state. As needed, it creates transactions, each represented by a Transaction state transition diagram, to provide the DSA, DSC, and DSD signaling. Each Transaction state transition diagram communicates only with the parent Dynamic Service Flow state transition diagram. The top-level state transition diagram filters DSx messages and passes them to the appropriate transaction based on SFID and Transaction ID.

There are six different types of transactions, which are locally initiated or remotely initiated for each of the DSA, DSC, and DSD messages (Figure 112 through Figure 117). Most transactions have three basic states—pending, holding, and deleting. The pending state is typically entered after creation and is where the transaction is waiting for a reply. The holding state is typically entered once the reply is received. The purpose of this state is to allow for retransmissions in case of a lost message, even though the local entity has perceived that the transaction has completed. The deleting state is only entered if the service flow is being deleted while a transaction is being processed.

The flow diagrams provide a detailed representation of each of the states in the Transaction state transition diagrams. All valid transitions are shown. Any inputs not shown should be handled as a severe error condition.

With one exception, these state diagrams apply equally to the BS and SS. In the Dynamic Service Flow Changing-Local state, there is a subtle difference in the SS and BS behaviors. This is called out in the state transition and detailed flow diagrams.

NOTE—The "Num Xacts" variable in the Dynamic Service Flow state transition diagram is incremented every time the top-level state diagram creates a transaction and is decremented every time a transaction terminates. A dynamic service flow shall not return to the Null state until it is deleted and all transactions have terminated.

The inputs for the state diagrams are identified below.

Dynamic Service Flow state transition diagram inputs from unspecified local, higher level entities:

— Add
— Change
— Delete

Dynamic Service Flow state transition diagram inputs from DSx Transaction state transition diagrams:

— DSA Succeeded
— DSA Failed
— DSA-ACK Lost
— DSA Erred
— DSA Ended

— DSC Succeeded
— DSC Failed
— DSC-ACK Lost
— DSC Erred
— DSC Ended

— DSD Succeeded
— DSD Erred
— DSD Ended

DSx Transaction state transition diagram outputs from the Dynamic Service Flow state transition diagram:

— SF Add
— SF Change
— SF Delete

— SF Abort Add
— SF Change-Remote
— SF Delete-Local
— SF Delete-Remote

— SF DSA-ACK Lost
— SF DSC-REQ Lost
— SF DSC-ACK Lost
— SF DSD-REQ Lost

— SF Changed
— SF Deleted

The creation of DSx transactions by the Dynamic Service Flow state transition diagram is indicated by the notation:

DSx – [Local | Remote] (initial_input)

where initial_input may be SF Add, DSA-REQ, SF Change, DSC-REQ, SF Delete, or DSD-REQ, depending on the transaction type and initiator.

State transitions (i.e., the lines between states) are labeled with <what causes the transition>/<messages and events triggered by the transition>. If there are multiple events or messages before the slash "/" separated by a comma, any of them can cause the transition. If there are multiple events or messages listed after the slash, all of the specified actions shall accompany the transition.

For example, "DSD-REQ/SF Delete Remote, DSD-Remote(DSD-REQ)" should be read as follows: Once DSD-REQ is received, it triggers sending a "SF Delete Remote" event to transactions running for this service flow AND starting the "DSD-Remote" transaction and pass the event DSD-REQ to it.

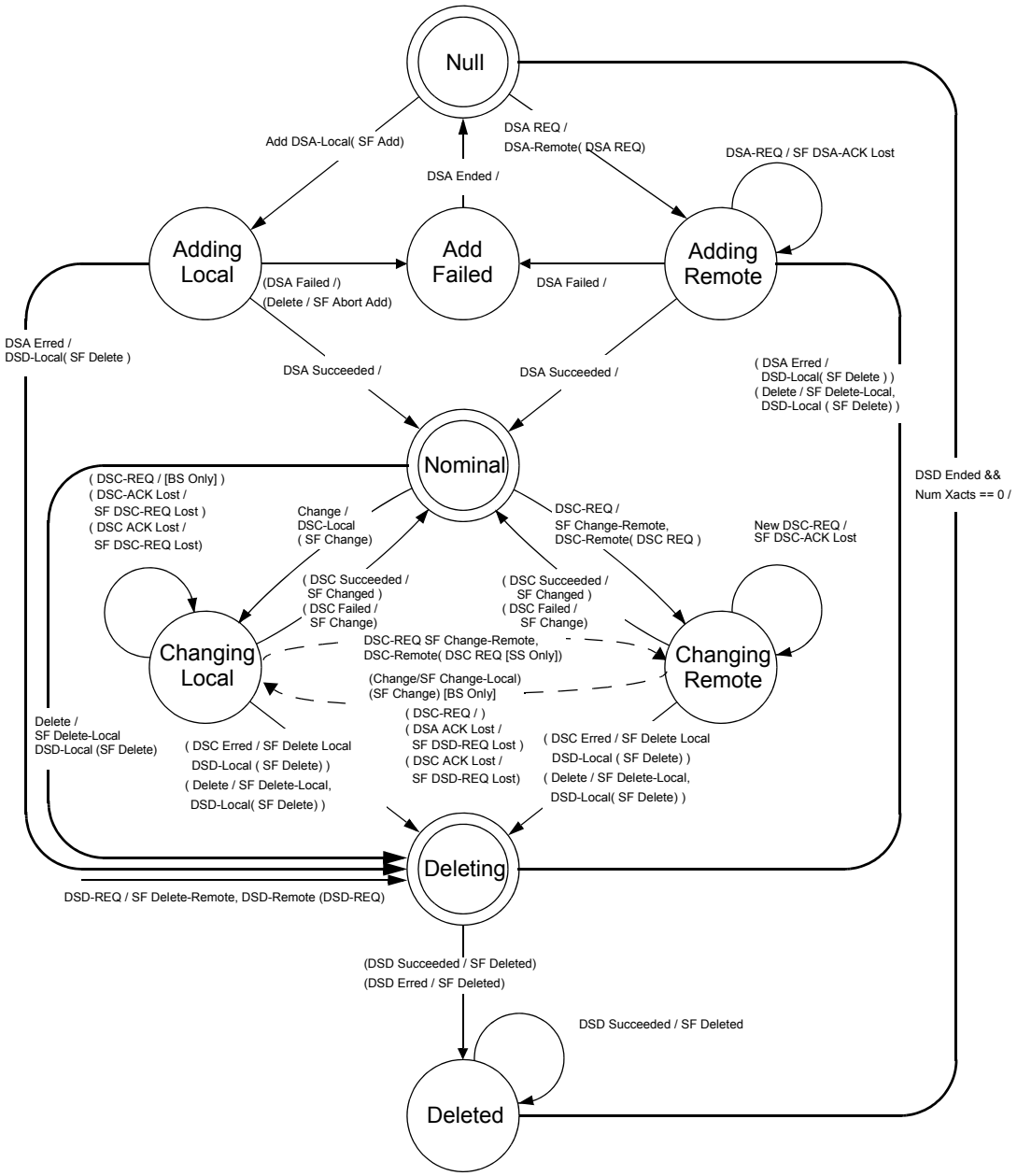

Figure 111—Dynamic Service Flow state transition diagram

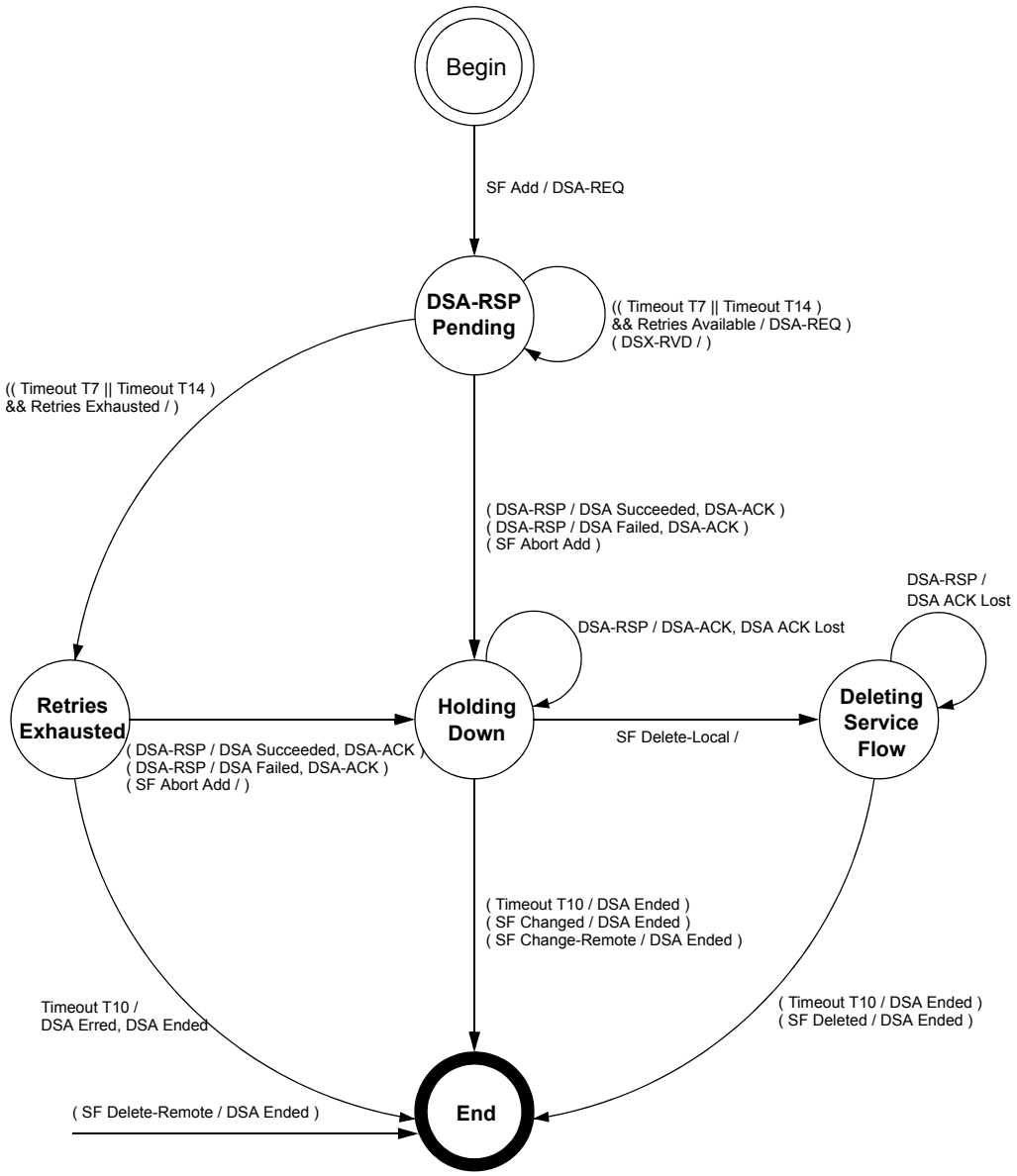

Figure 112—DSA—Locally Initiated Transaction state transition diagram

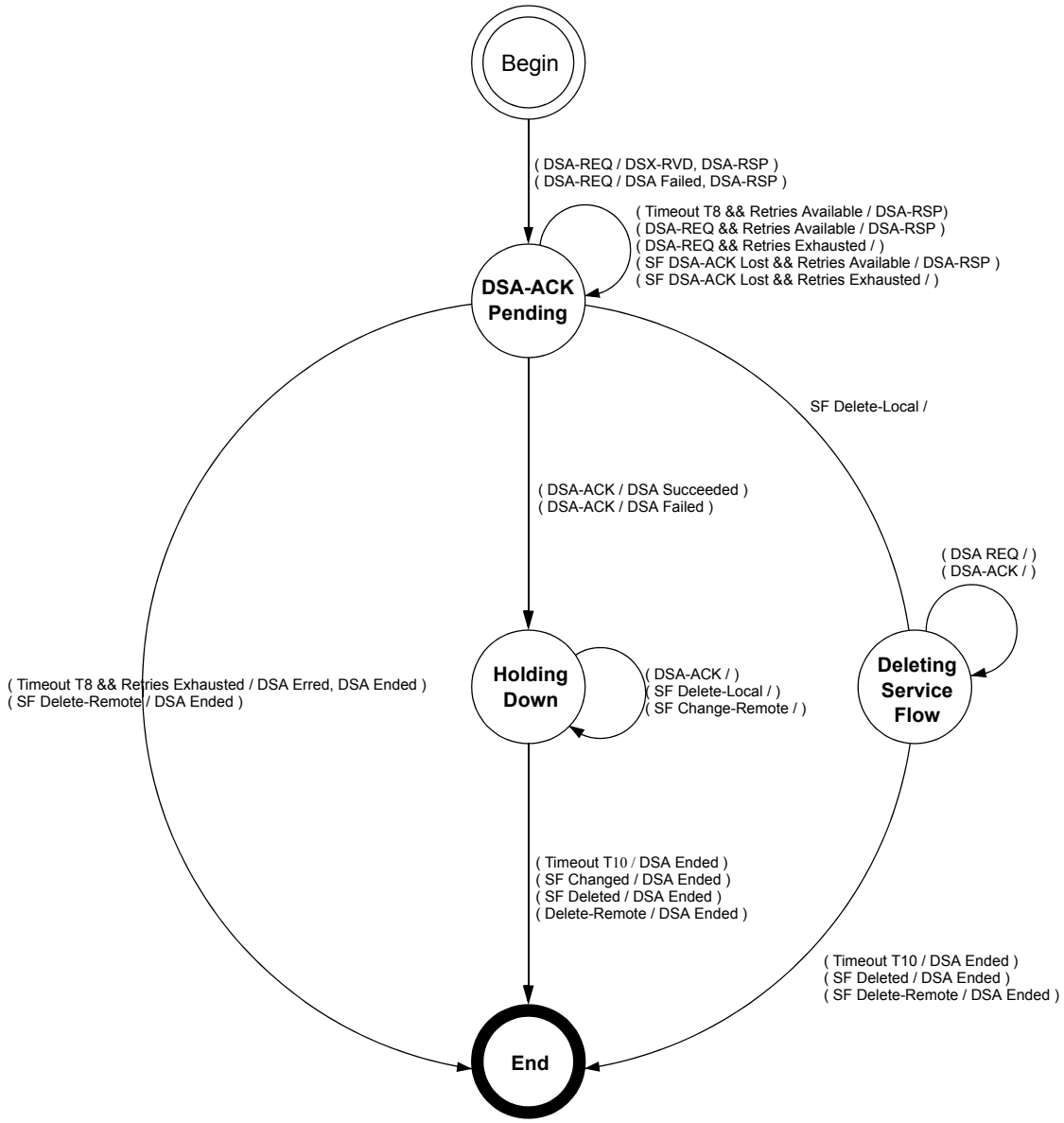

Figure 113—DSA—Remotely Initiated Transaction state transition diagram

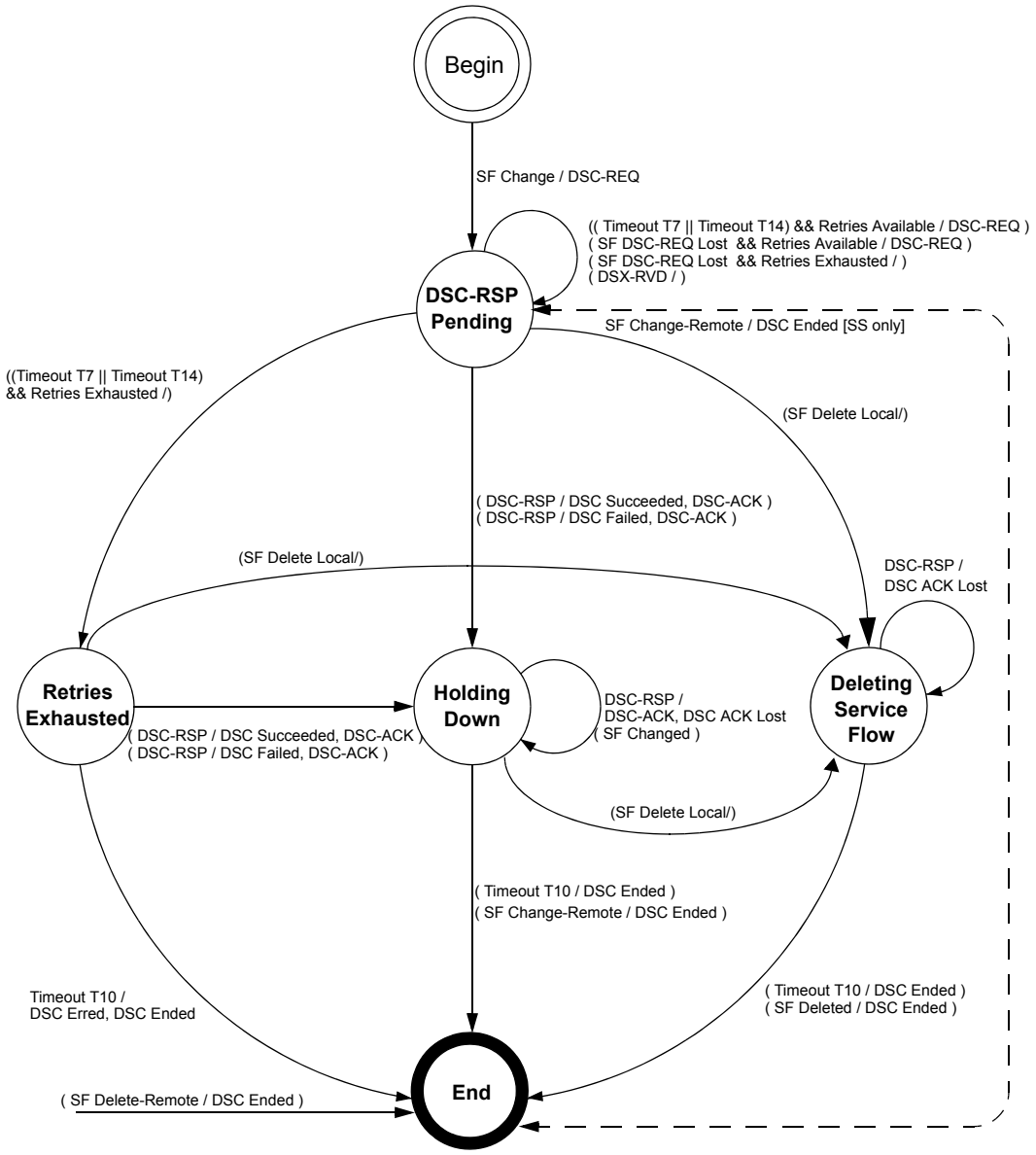

Figure 114—DSC—Locally Initiated Transaction state transition diagram

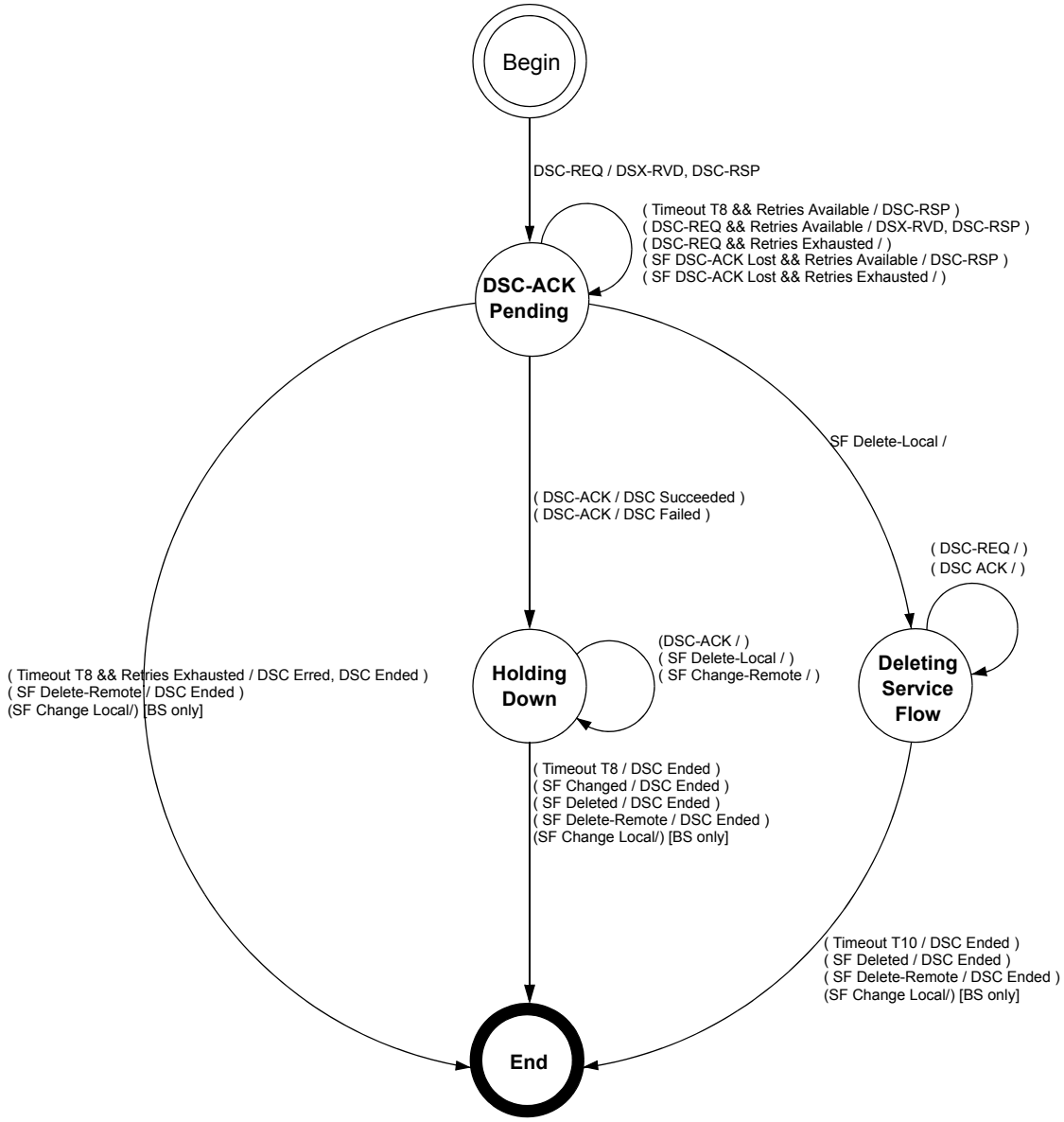

Figure 115—DSC—Remotely Initiated Transaction state transition diagram

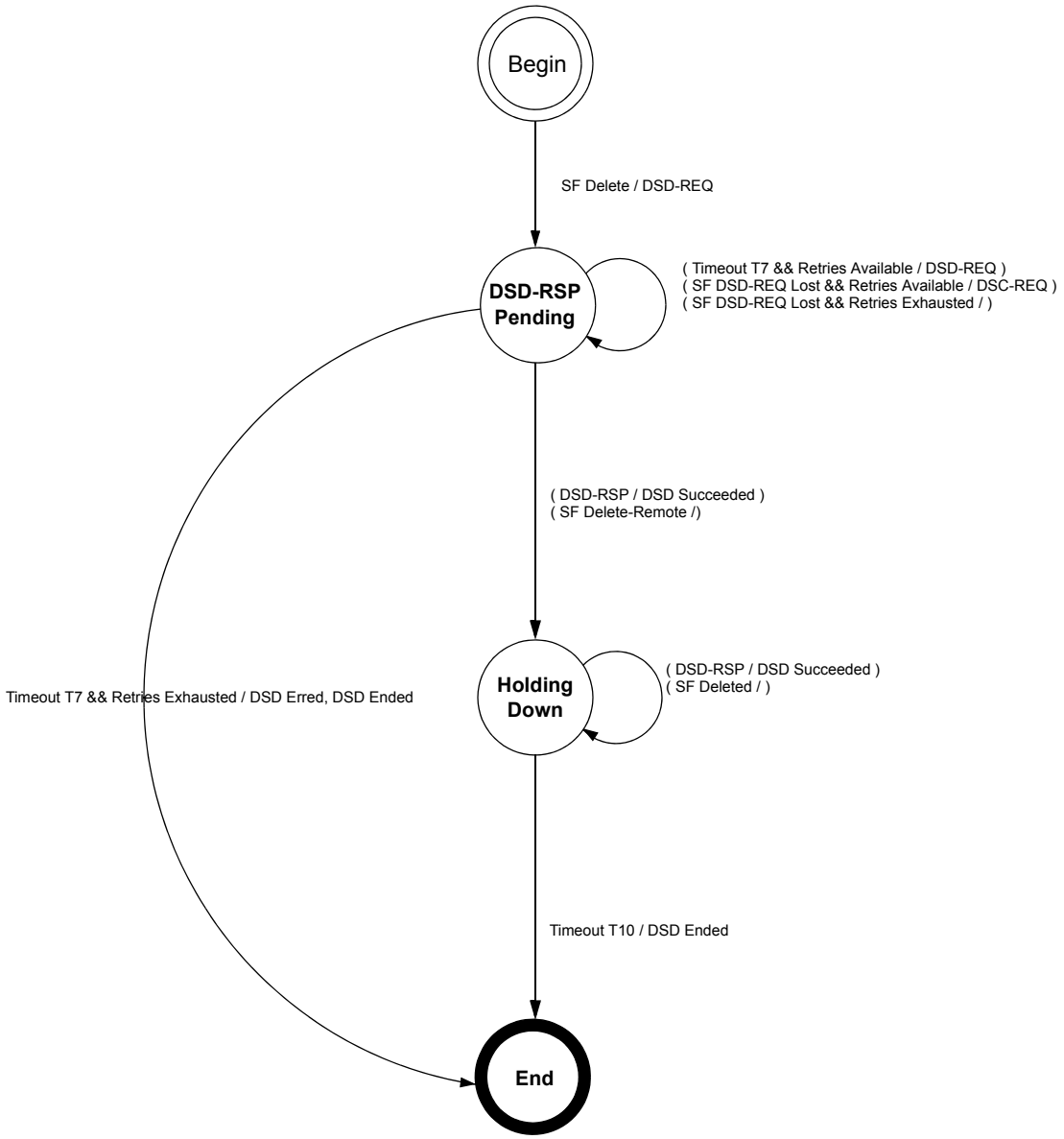

Figure 116—DSD—Locally Initiated Transaction state transition diagram

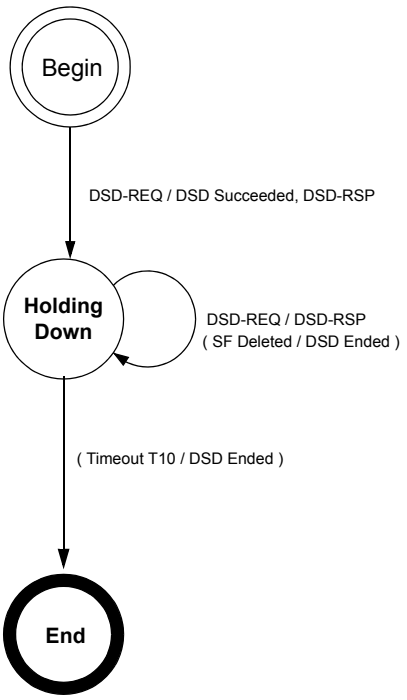

Figure 117—DSD—Remotely Initiated Transaction state transition diagram

6.3.14.9.3 Dynamic service addition (DSA)

6.3.14.9.3.1 SS-initiated DSA

An SS wishing to create either an UL or DL service flow sends a request to the BS using a DSA-REQ message. The BS checks the integrity of the message and, if the message is intact, sends a message received (DSX-RVD) response to the SS. The BS checks the SS's authorization for the requested service and whether the QoS requirements can be supported, generating an appropriate response using a DSA-RSP message. The SS concludes the transaction with an acknowledgment message (DSA-ACK). This process is illustrated in Table 190.

Table 190—DSA initiated from SS

SS		BS
New service flow needed		
Check if resources are available		
Send DSA-REQ Set Timers T7 and T14	---DSA-REQ-->	Receive DSA-REQ
Timer T14 Stops	<-- DSX-RVD--	DSA-REQ integrity valid
		Check whether SS is authorized for Service[a]

Table 190—DSA initiated from SS *(continued)*

SS		BS
		Check whether service flow QoS can be supported Create SFID If UL AdmittedQoSParamSet is non-null, map service flow to CID If UL ActiveQoSParamSet is non-null, Enable reception of data on new UL service flow
Receive DSA-RSP Timer T7 Stops If ActiveQoSParamSet is non-null, Enable transmission or reception of data on new service flow	<--DSA-RSP---	Send DSA-RSP
Send DSA-ACK	---DSA-ACK-->	Receive DSA-ACK If DL ActiveQoSParamSet is non-null, Enable transmission of data on new DL service flow

[a]Authorization happens prior to the DSA-REQ being received by the BS. The details of BS signalling to anticipate a DSA-REQ are beyond the scope of this standard.

6.3.14.9.3.2 BS-initiated DSA

A BS wishing to establish either an UL or a DL dynamic service flow with an SS performs the following operations. The BS checks the authorization of the destination SS for the requested class of service and to determine whether the QoS requirements can be supported. If the service can be supported, the BS generates a new SFID with the required class of service and informs the SS using a DSA-REQ message. If the SS checks that it can support the service, it responds using a DSA-RSP message. The transaction completes with the BS sending the acknowledge message (DSA-ACK). This process is illustrated in Table 191.

Table 191—DSA initiated from BS

SS		BS
		New service flow required for SS Check whether SS is authorized for Service Check whether service flow(s) QoS can be supported Create SFID If AdmittedQoSParamSet is non-null, map service flow to CID
Receive DSA-REQ Confirm that SS can support service flow	<--DSA-REQ---	Send DSA-REQ Set Timer T7

Table 191—DSA initiated from BS *(continued)*

SS		BS
Add DL SFID (if present) Enable reception on any new DL service flow		
Send DSA-RSP	---DSA-RSP-->	Receive DSA-RSP Timer T7 Stops Enable transmission (DL) or reception (UL) of data on new service flow
Receive DSA-ACK Enable transmission on new UL service flow	<--DSA-ACK---	Send DSA-ACK

6.3.14.9.3.3 DSA state transition diagrams

DSA state transition diagrams are shown in Figure 118 through Figure 126.

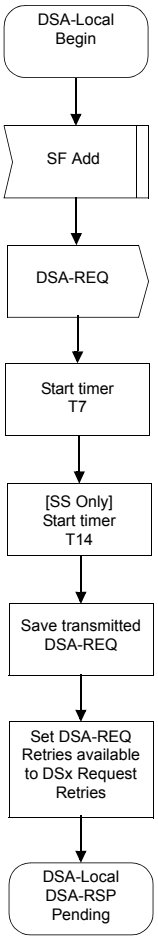

Figure 118—DSA—Locally Initiated Transaction Begin state flow diagram

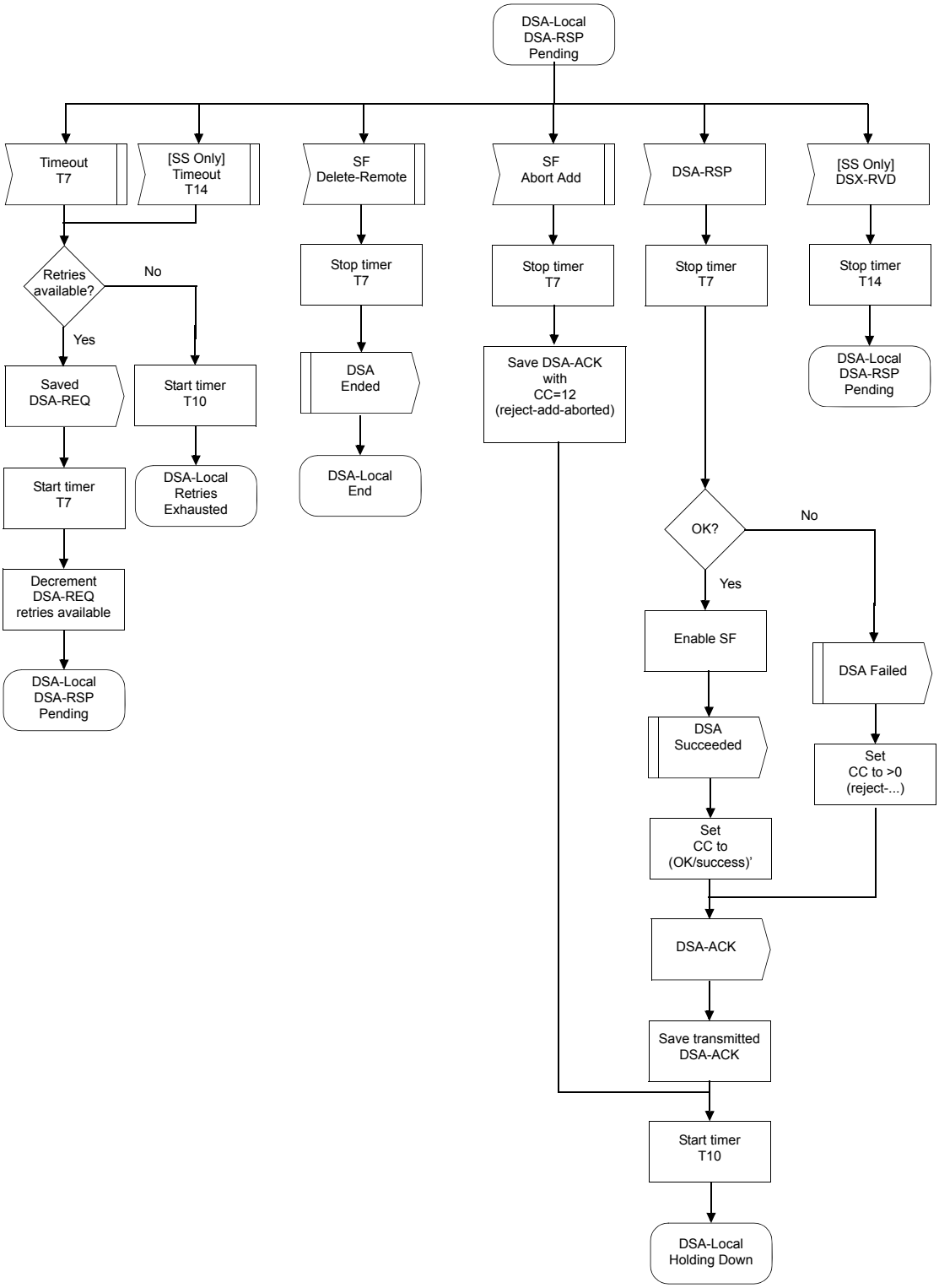

Figure 119—DSA—Locally Initiated Transaction DSA-RSP Pending state flow diagram

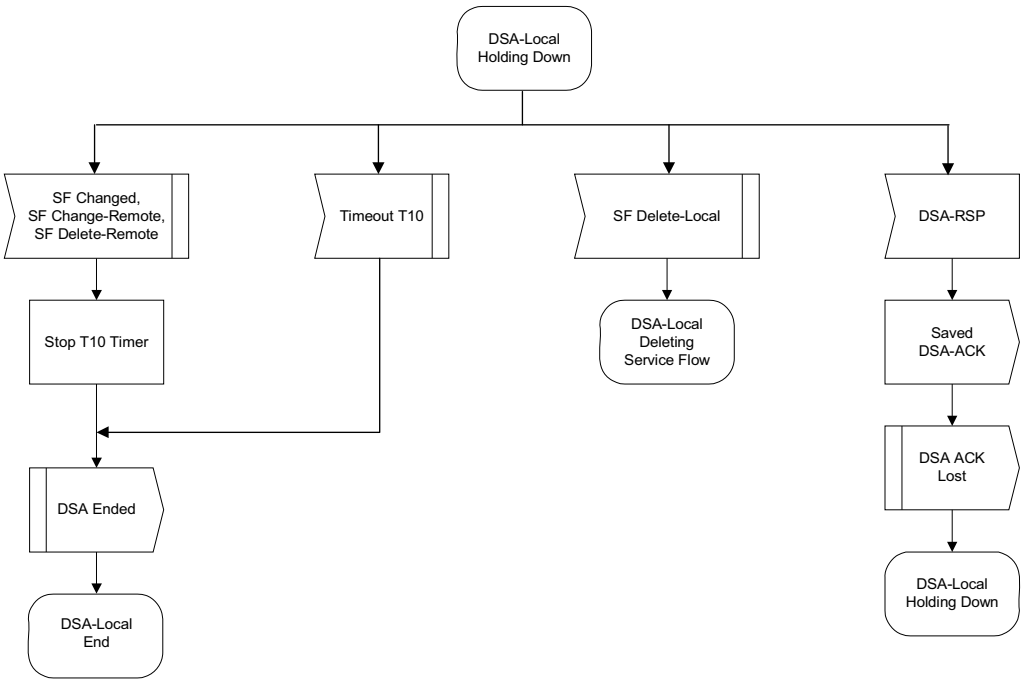

Figure 120—DSA—Locally Initiated Transaction Holding state flow diagram

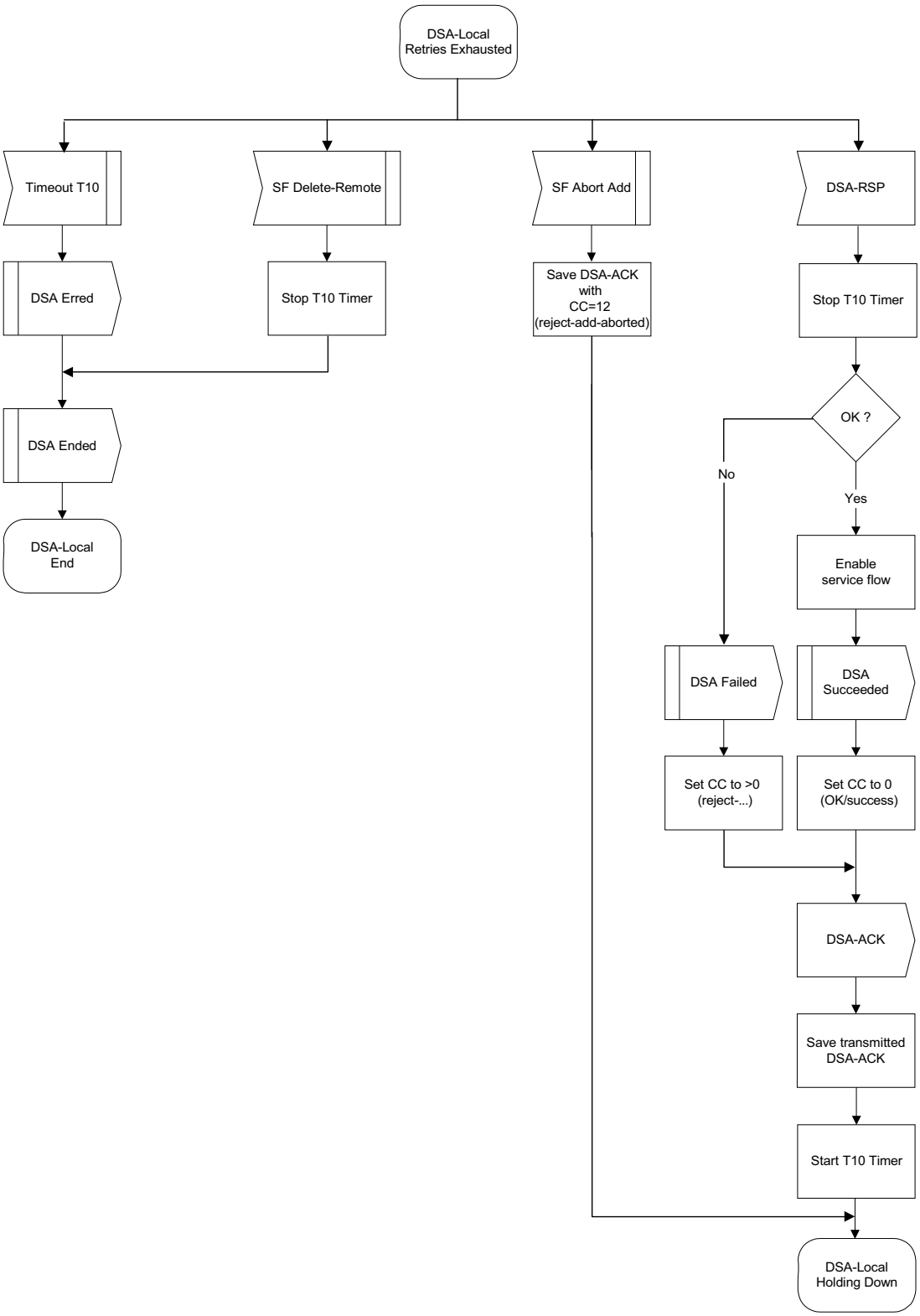

Figure 121—DSA—Locally Initiated Transaction Retries Exhausted state flow diagram

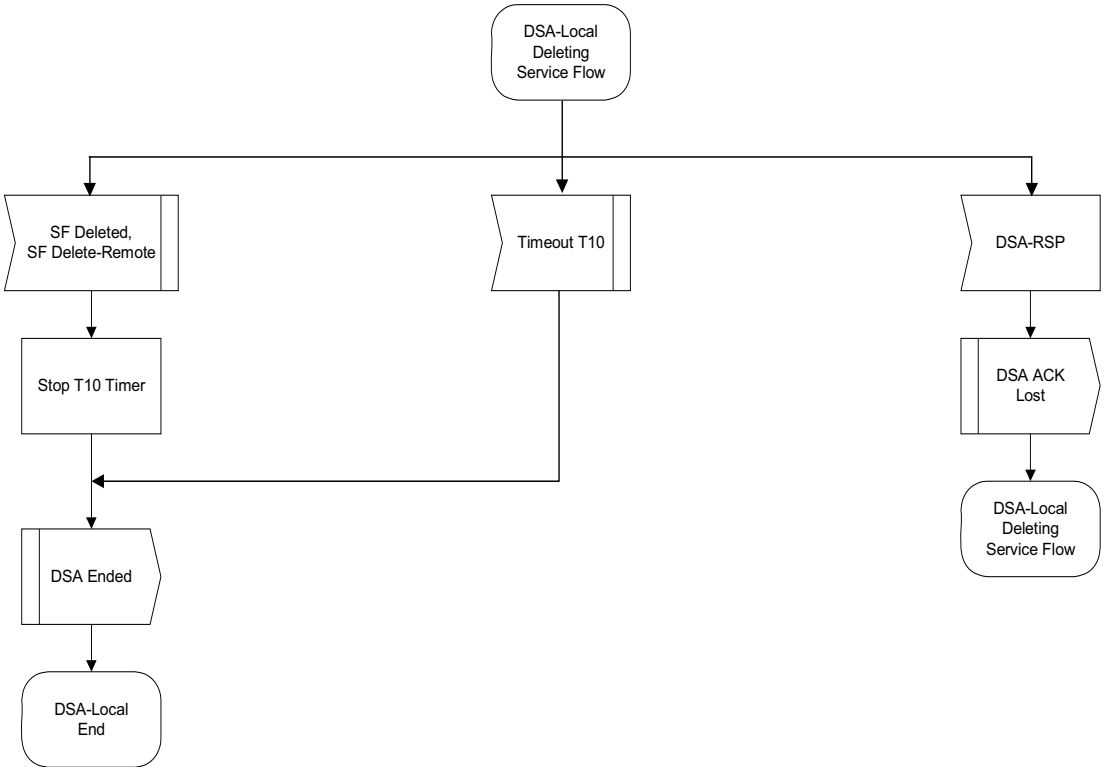

Figure 122—DSA—Locally Initiated Transaction Deleting Service Flow state flow diagram

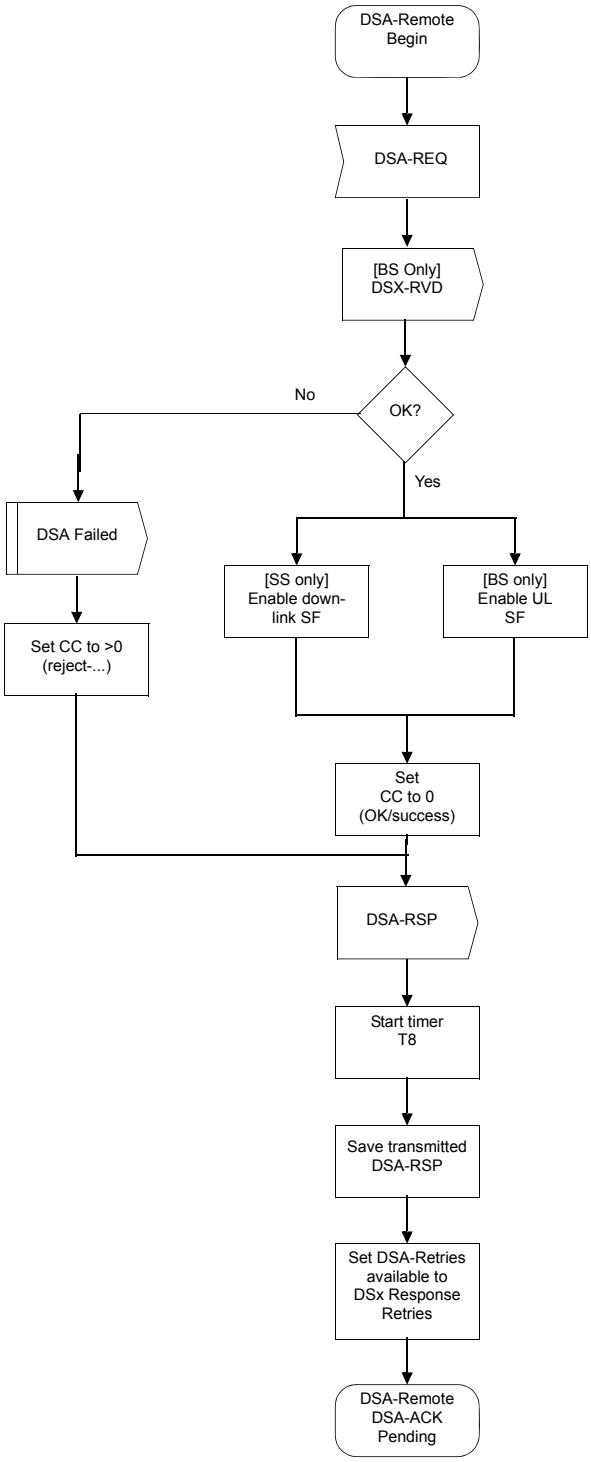

Figure 123—DSA—Remotely Initiated Transaction Begin state flow diagram

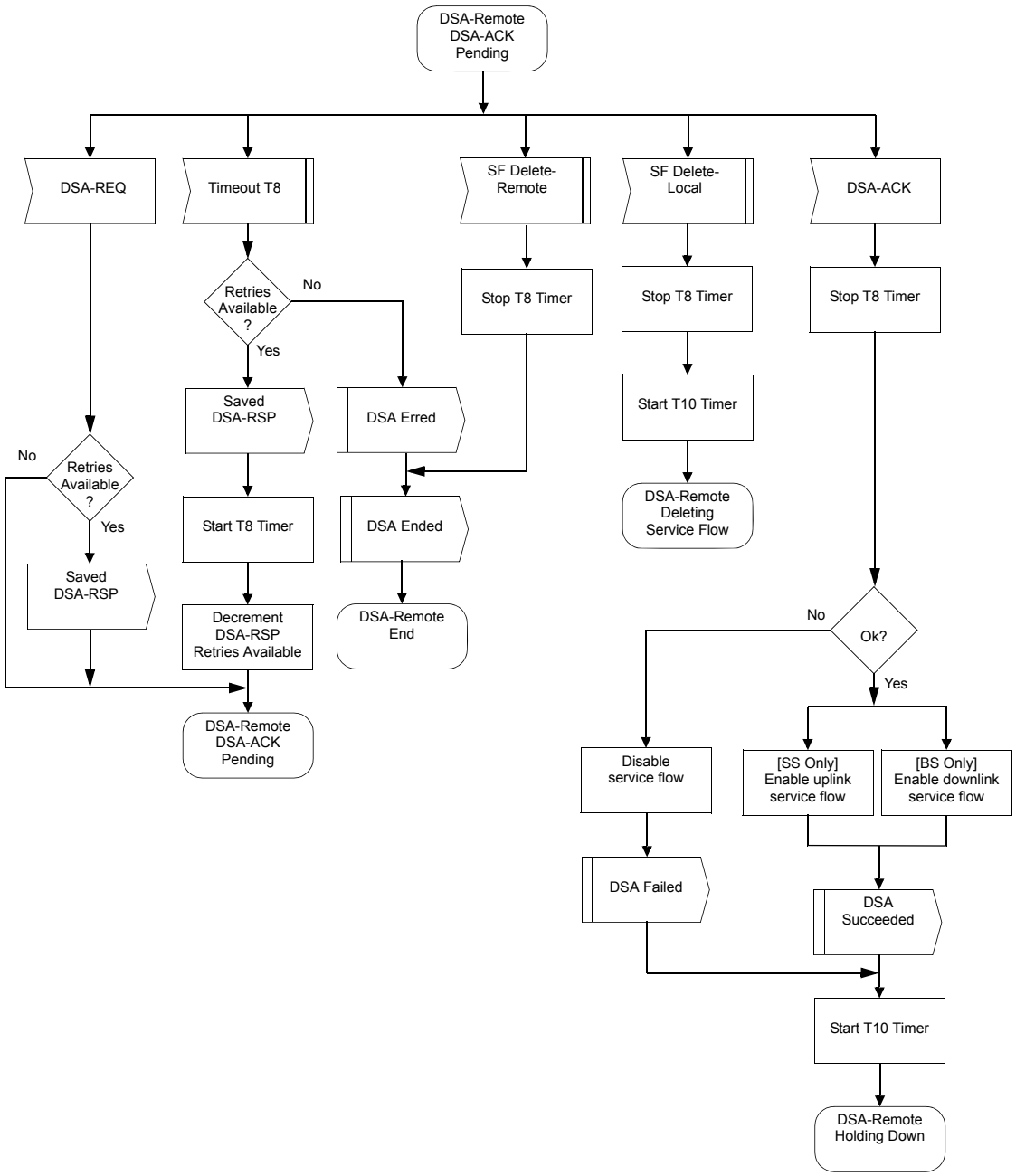

Figure 124—DSA—Remotely Initiated Transaction DSA-ACK Pending state flow diagram

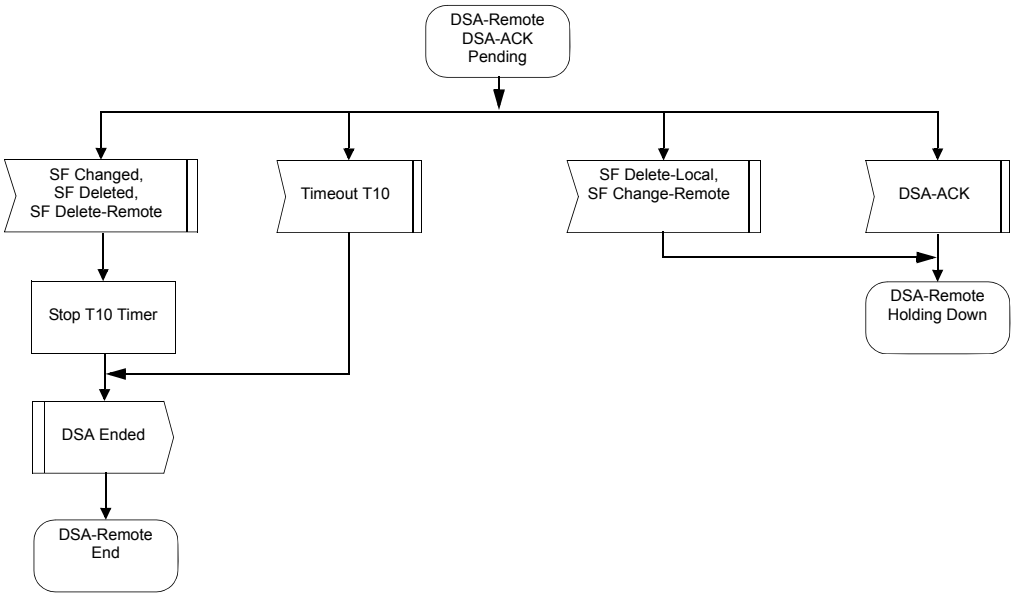

Figure 125—DSA—Remotely Initiated Transaction Holding Down state flow diagram

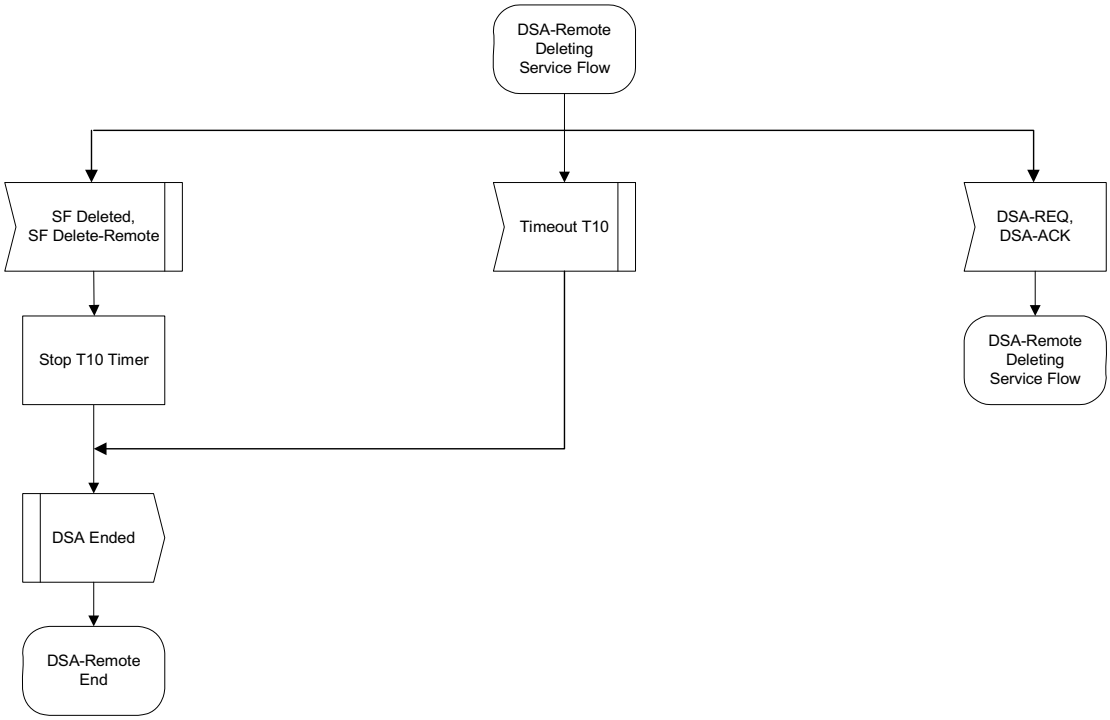

Figure 126—DSA—Remotely Initiated Transaction Deleting Service state flow diagram

6.3.14.9.4 Dynamic service change (DSC)

The DSC set of messages is used to modify the flow parameters associated with a service flow. Specifically, DSC can modify the service flow specification. Implementation of dynamic service change initiated by BS is mandatory. Implementation of dynamic service change initiated by SS is optional.

A single DSC message exchange can modify the parameters of either one DL service flow or one UL service flow.

To prevent packet loss, any required bandwidth change is sequenced between the SS and BS.

The BS controls both UL and DL scheduling. The timing of scheduling changes is independent of direction AND whether it is an increase or decrease in bandwidth. The BS always changes scheduling on receipt of a DSC-REQ (SS-initiated transaction) or DSC-RSP (BS-initiated transaction).

The BS also controls the DL Tx behavior. The change in DL Tx behavior is always coincident with the change in DL scheduling (i.e., BS controls both and changes both simultaneously).

The SS controls the UL Tx behavior. The timing of SS Tx behavior changes is a function of which device initiated the transaction AND whether the change is an “increase” or “decrease” in bandwidth.

If an UL service flow’s bandwidth is being reduced, the SS reduces its payload bandwidth first and then the BS reduces the bandwidth scheduled for the service flow. If an UL service flow’s bandwidth is being increased, the BS increases the bandwidth scheduled for the service flow first and then the SS increases its payload bandwidth.

Any service flow can be deactivated with a DSC command by sending a DSC-REQ message, referencing the SFID, and including a null ActiveQoSParamSet. If a service flow that was provisioned is deactivated, the provisioning information for that service flow shall be maintained until the service flow is reactivated.

An SS shall have only one DSC transaction outstanding per service flow. If it detects a second transaction initiated by the BS, the SS shall abort the transaction it initiated and allow the BS-initiated transaction to complete.

A BS shall have only one DSC transaction outstanding per service flow. If it detects a second transaction initiated by the SS, the BS shall abort the transaction that the SS initiated and allow the BS-initiated transaction to complete.

The following service flow parameters may not be changed and shall not be present in the DSC-REQ or DSC-RSP messages:

— Service Flow Scheduling Type
— Type of Data Delivery Services
— Request/Transmission Policy
— Convergence Sublayer Specification
— Fixed-Length versus Variable-Length SDU Indicator
— SDU Size
— ATM switching (ATM Services only)
— ARQ parameters, in accordance with individual TLV definitions
— FSN Size
— Target SAID

NOTE—Currently anticipated applications would probably control a service flow through either the SS or BS, and not both. Therefore, the case of a DSC being initiated simultaneously by the SS and BS is considered as an exception condition and treated as one.

6.3.14.9.4.1 SS-initiated DSC

An SS that needs to change a service flow definition performs the following operations.

The SS informs the BS using a DSC-REQ. The BS checks the integrity of the message and, if the message is intact, sends a message received (DSX-RVD) response to the SS. The BS shall decide if the referenced service flow can support this modification. The BS shall respond with a DSC-RSP indicating acceptance or rejection. In the case when rejection was caused by presence of nonsupported parameter of nonsupported value, specific parameter may be included into DSC-RSP. The SS reconfigures the service flow if appropriate, and then shall respond with a DSC-ACK. This process is illustrated in Table 192.

Table 192—DSC initiated from SS

BS		SS
		Service flow requires modifying
Receive DSC-REQ	<--------- DSC-REQ ----------	Send DSC-REQ Set Timers T7 and T14
DSC-REQ integrity valid	---------- DSX-RVD --------->	Timer T14 Stops
Validate Request		
Modify service flow		
Increase Channel Bandwidth if Required		
Send DSC-RSP	---------- DSC-RSP --------->	Receive DSC-RSP Timer T7 Stops
		Modify service flow
		Adjust Payload Bandwidth
Receive DSC-ACK	<--------- DSC-ACK ----------	Send DSC-ACK
Decrease Channel Bandwidth if Required		

6.3.14.9.4.2 BS-initiated DSC

A BS that needs to change a service flow definition performs the following operations.

The BS shall decide if the referenced service flow can support this modification. If so, the BS informs the SS using a DSC-REQ. The SS checks that it can support the service change, and shall respond using a DSC-RSP indicating acceptance or rejection. In the case when rejection was caused by presence of nonsupported parameter of nonsupported value, specific parameter may be included into DSC-RSP. The BS reconfigures the service flow if appropriate, and then shall respond with a DSC-ACK. This process is illustrated in Table 193.

Table 193—DSC initiated from BS

BS		SS
Service flow requires modifying		
Send DSC-REQ Set Timer T7	---------- DSC-REQ --------->	Receive DSC-REQ
		Validate request
		Modify service flow
		Decrease Payload Bandwidth if Required
Receive DSC-RSP Timer T7 Stops	<--------- DSC-RSP ----------	Send DSC-RSP
Modify service flow		
Adjust Channel Bandwidth		
Send DSC-ACK	---------- DSC-ACK --------->	Receive DSC-ACK
		Increase Payload Bandwidth if Required

6.3.14.9.4.3 DSC state transition diagrams

DSC state transition diagrams are shown in Figure 127 through Figure 135.

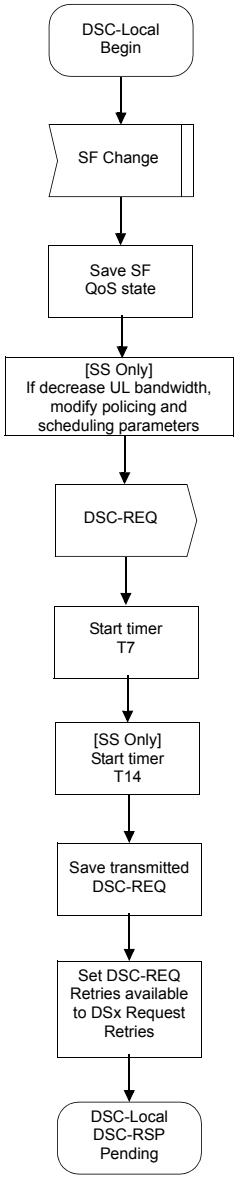

Figure 127—DSC—Locally Initiated Transaction Begin state flow diagram

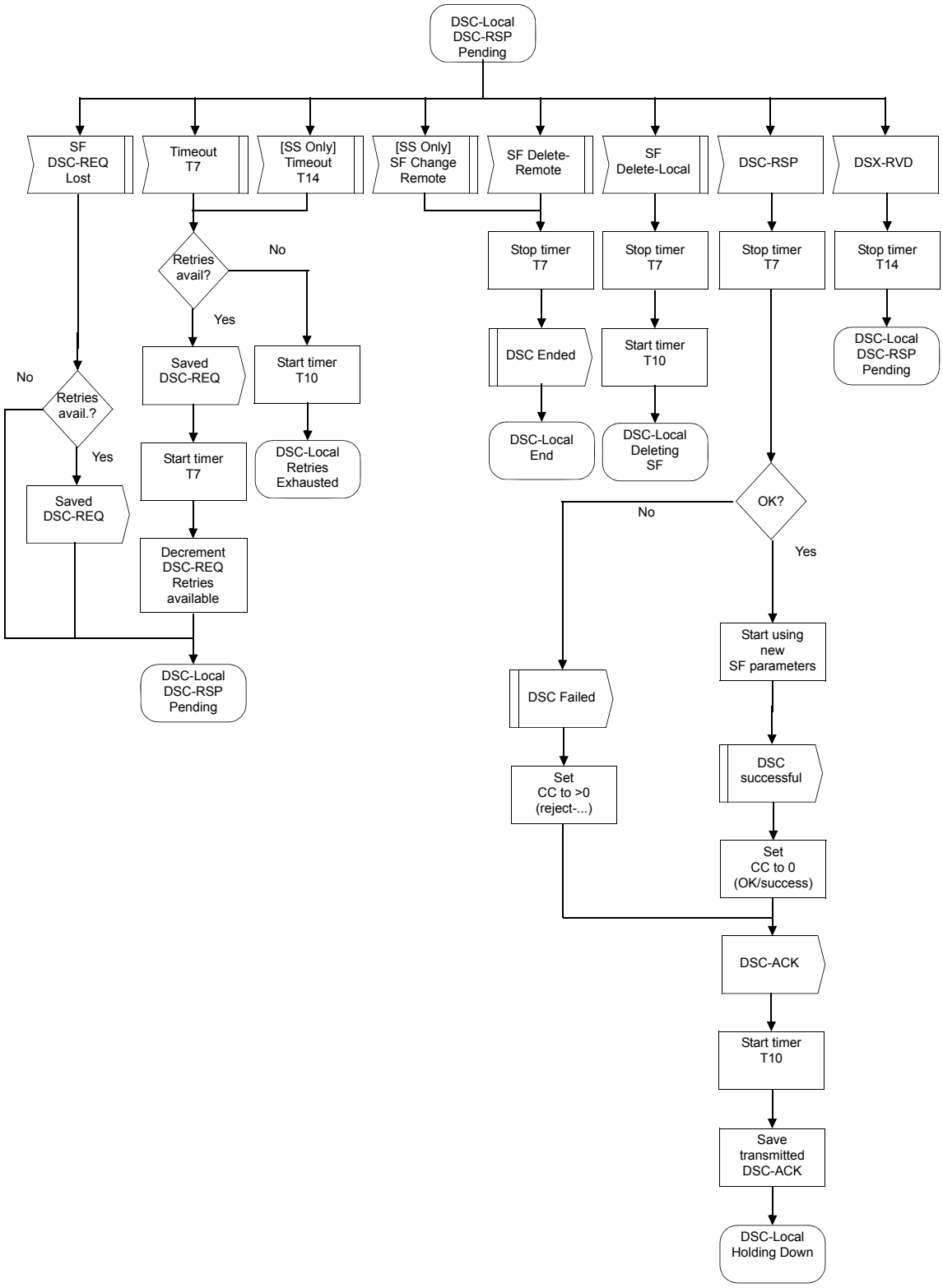

Figure 128—DSC—Locally Initiated Transaction DSC-RSP Pending state flow diagram

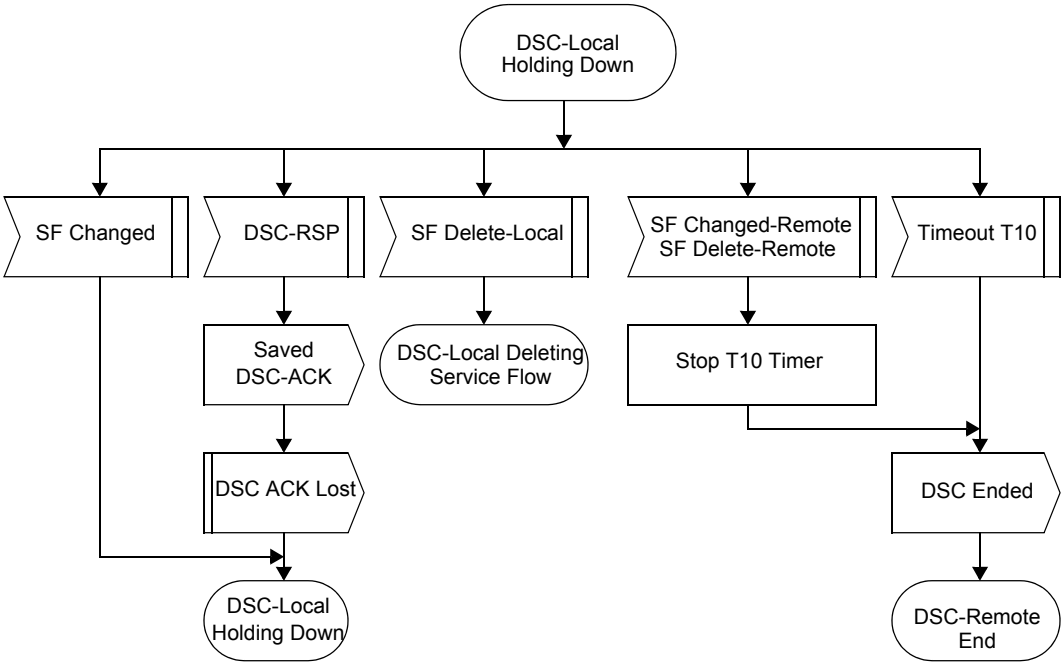

Figure 129—DSC—Locally Initiated Transaction Holding Down state flow diagram

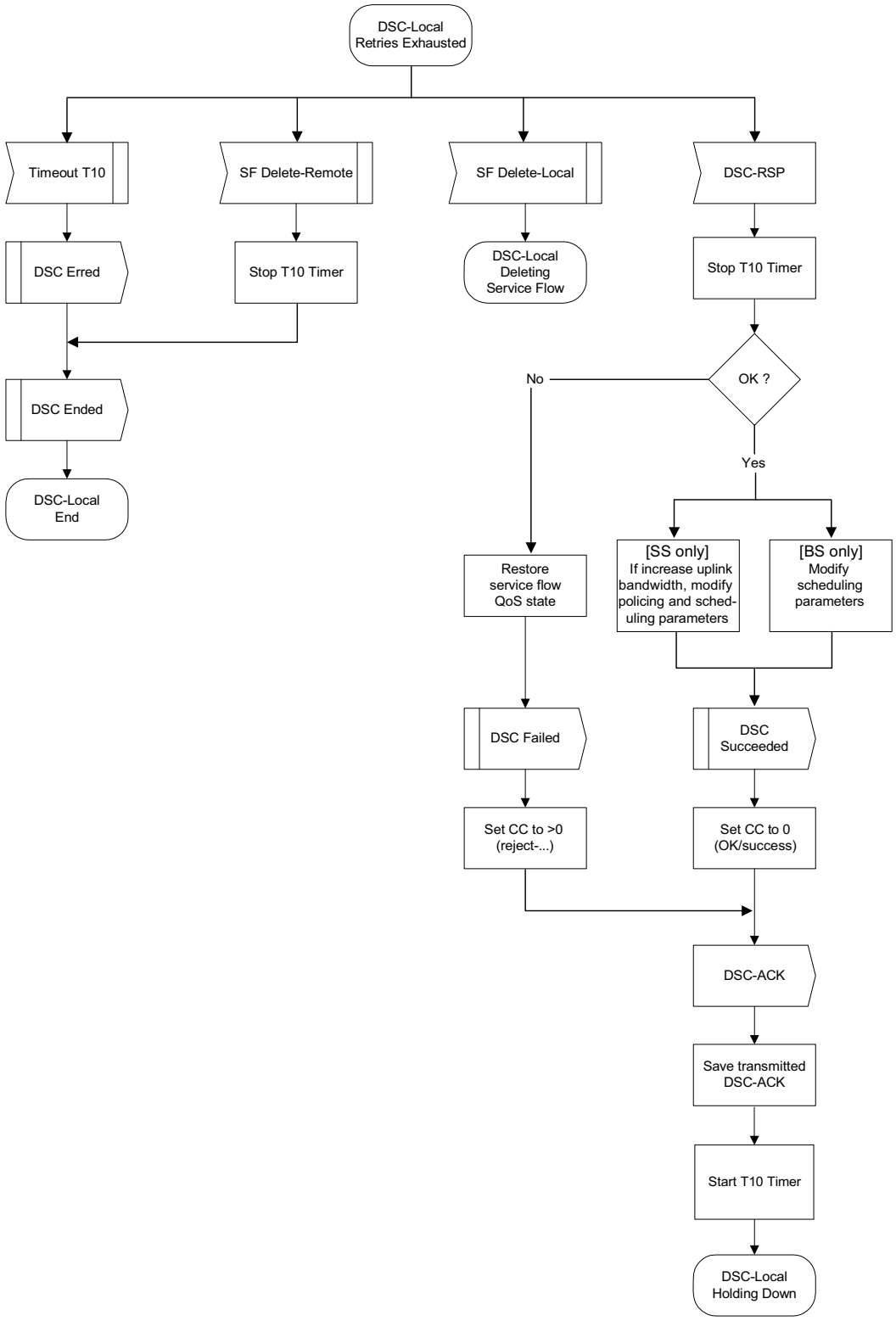

Figure 130—DSC—Locally Initiated Transaction Retries Exhausted state flow diagram

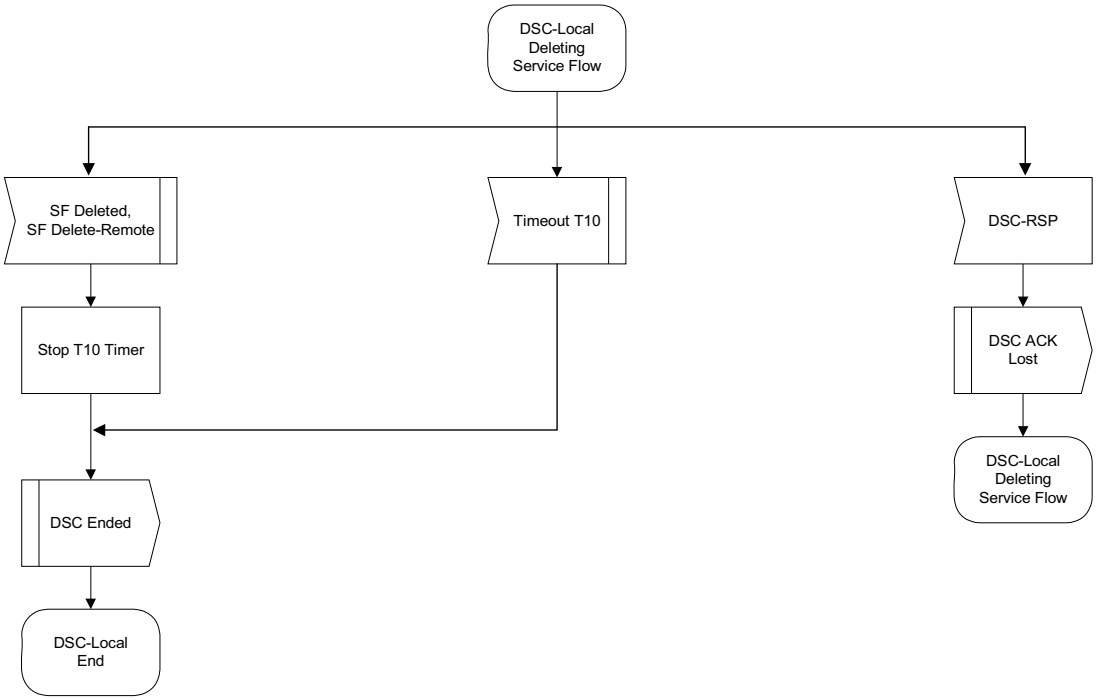

Figure 131—DSC—Locally Initiated Transaction Deleting Service Flow state flow diagram

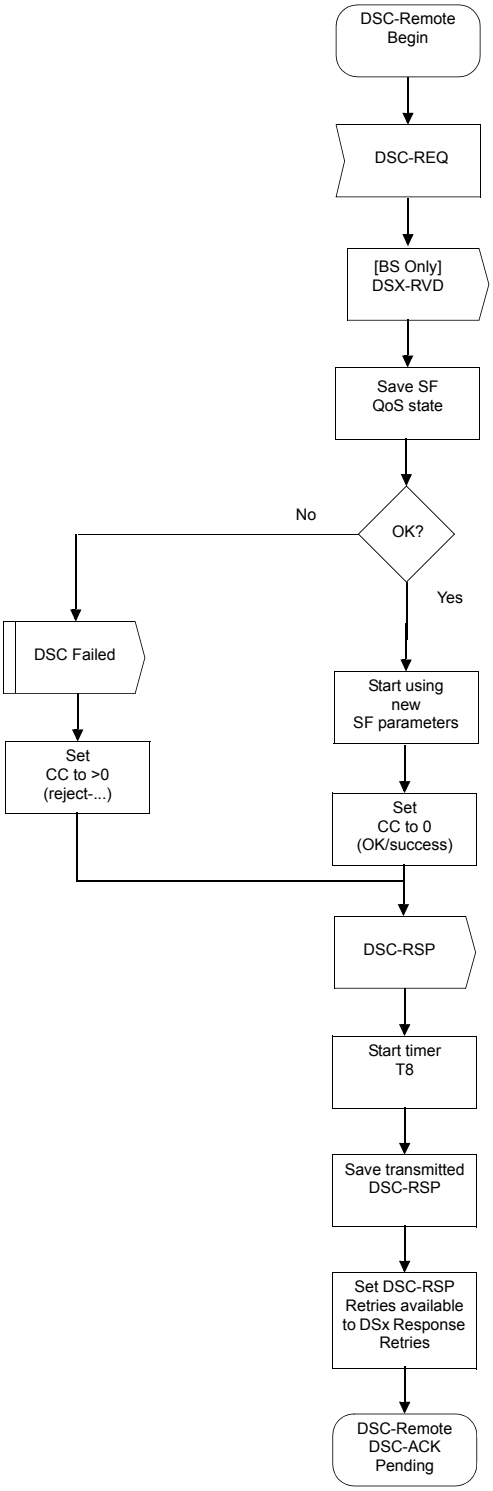

Figure 132—DSC—Remotely Initiated Transaction Begin state flow diagram

\

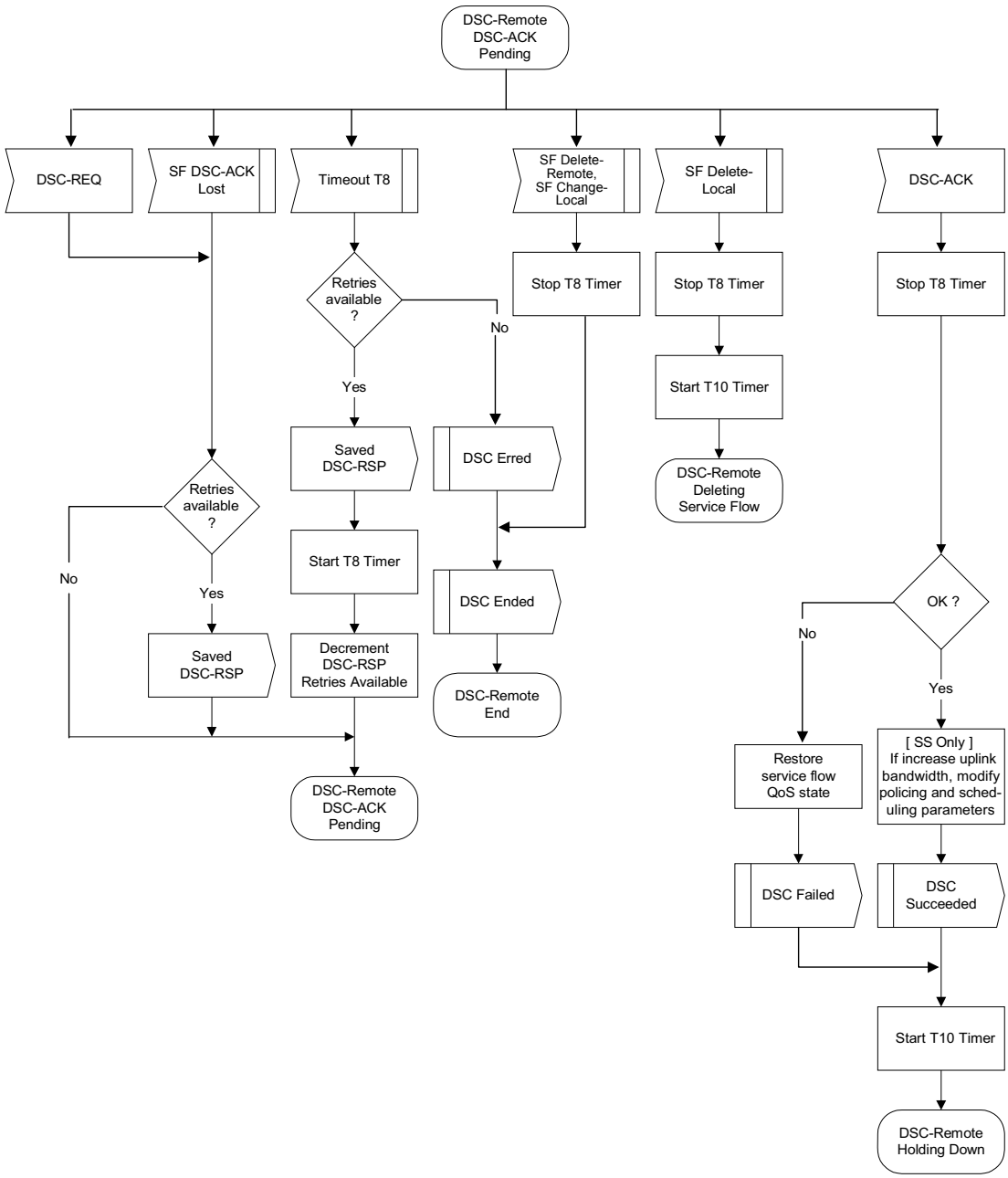

Figure 133—DSC—Remotely Initiated Transaction DSC-ACK Pending state flow diagram

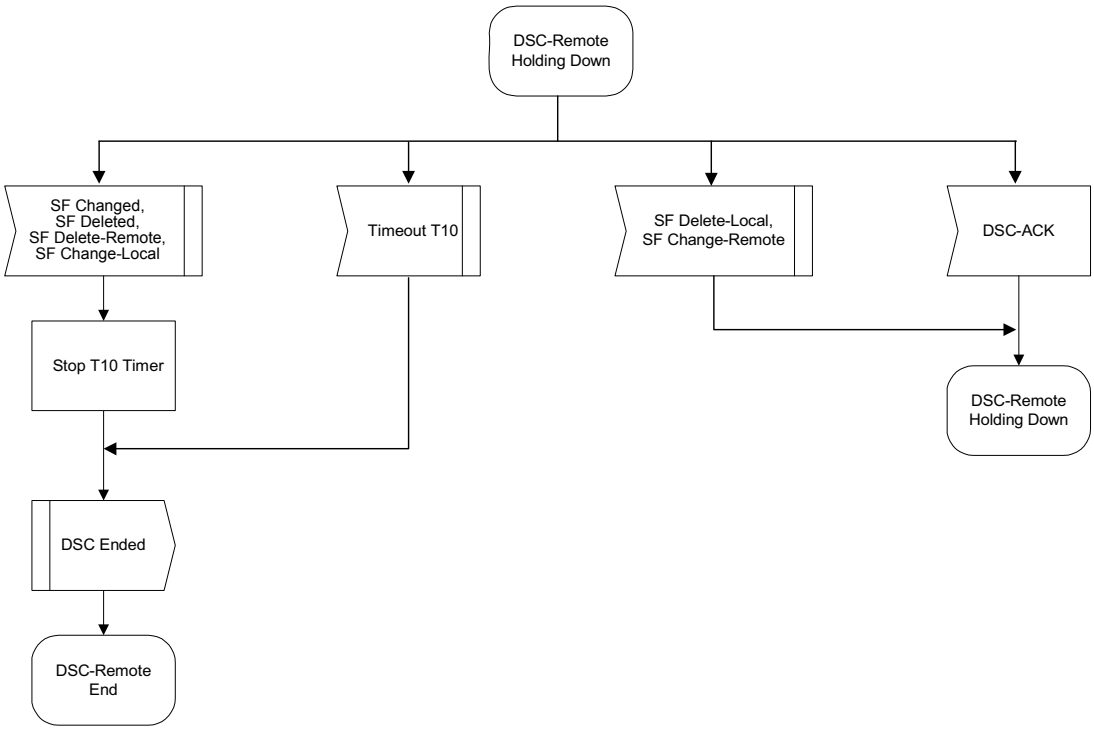

Figure 134—DSC—Remotely Initiated Transaction Holding Down state flow diagram

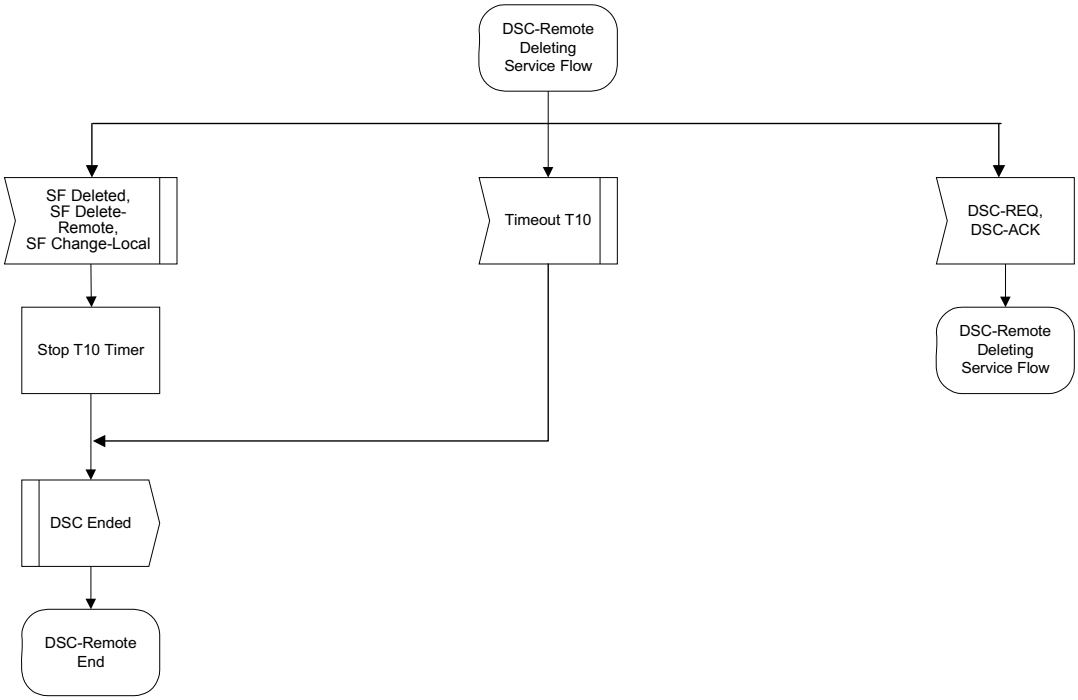

Figure 135—DSC—Remotely Initiated Transaction Deleting Service Flow state flow diagram

6.3.14.9.5 Connection release

Any service flow can be deleted with the DSD messages. When a service flow is deleted, all resources associated with it are released. If a service flow for a provisioned service is deleted, the ability to reestablish the service flow for that service is network management dependent. Therefore, care should be taken before deleting such service flows. Implementation of dynamic Service deletion initiated by BS is mandatory. Implementation of dynamic service deletion initiated by SS is optional.

6.3.14.9.5.1 SS-initiated DSD

An SS wishing to delete a service flow generates a delete request to the BS using a DSD-REQ message. The BS removes the service flow and generates a response using a DSD-RSP message. This process is illustrated in Table 194. Only one service flow can be deleted per DSD-REQ.

Table 194—DSD initiated from SS

SS		BS
Service flow no longer needed		
Delete service flow		
Send DSD-REQ	---DSD-REQ-->	Receive DSD-REQ
		Verify SS is service flow “owner”
		Delete service flow
Receive DSD-RSP	<--DSD-RSP---	Send DSD-RSP

6.3.14.9.5.2 BS-initiated DSD

A BS wishing to delete a dynamic service flow generates a delete request to the associated SS using a DSD-REQ. The SS removes the service flow and generates a response using a DSD-RSP. This process is illustrated in Table 195. Only one service flow can be deleted per DSD-REQ.

Table 195—DSD initiated from BS

SS		BS
		Service flow no longer needed
		Delete service flow
		Determine associated SS for this service flow
Receive DSD-REQ	<---DSD-REQ--	Send DSD-REQ
Delete service flow		
Send DSD-RSP	---DSD-RSP-->	Receive DSD-RSP

6.3.14.9.5.3 DSD state transition diagrams

DSD state transition diagrams are shown in Figure 136 through Figure 140.

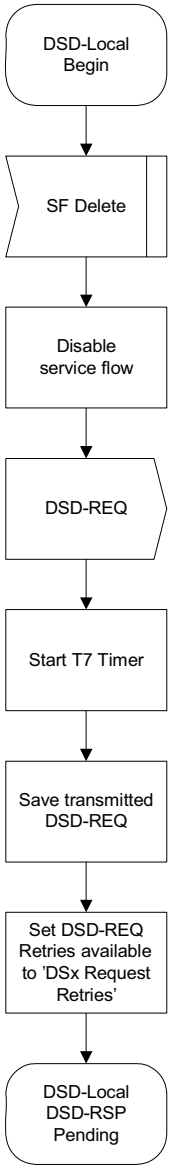

Figure 136—DSD—Locally Initiated Transaction Begin state flow diagram

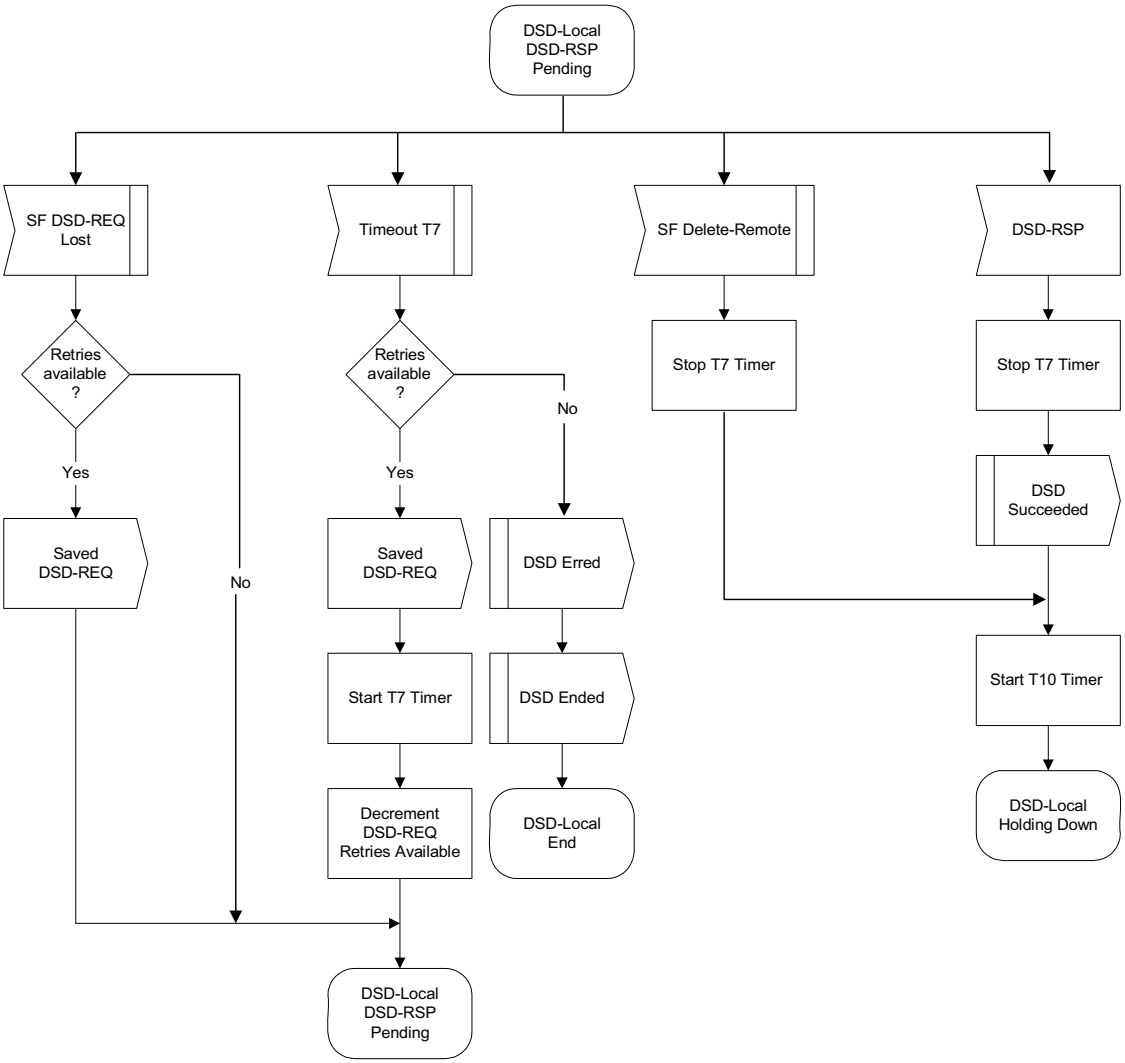

Figure 137—DSD—Locally Initiated Transaction DSD-RSP Pending state flow diagram

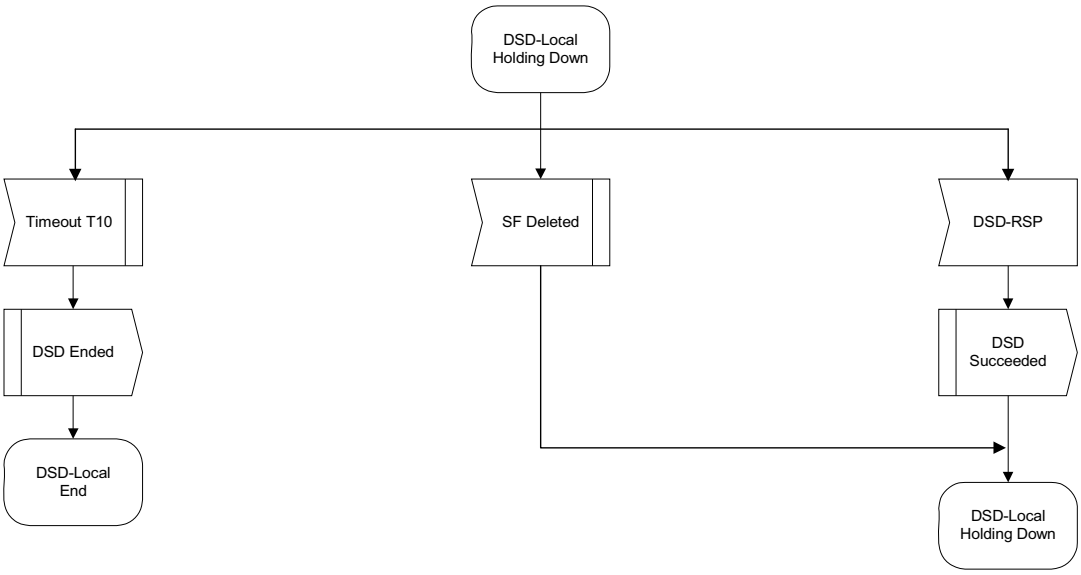

Figure 138—DSD—Locally Initiated Transaction Holding Down state flow diagram

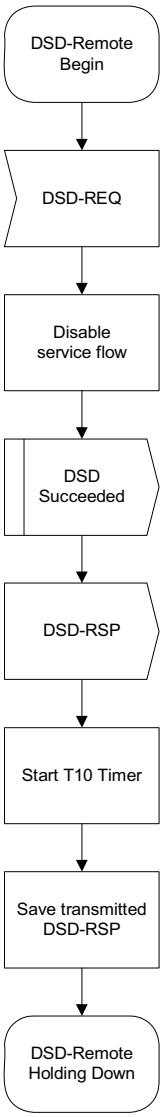

Figure 139—DSD—Remotely Initiated Transaction Begin state flow diagram

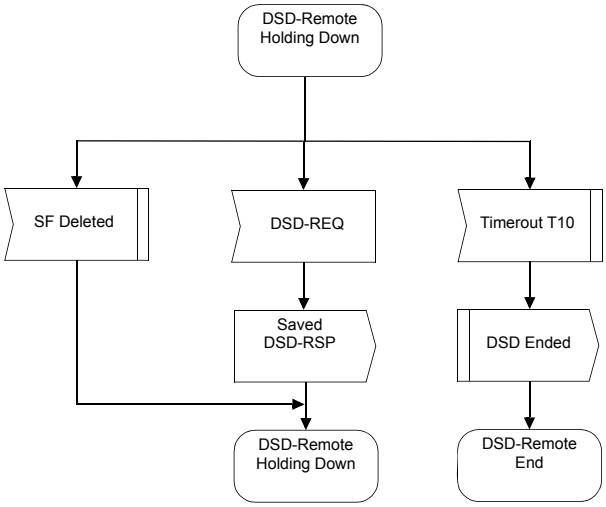

Figure 140—DSD—Remotely Initiated Transaction Holding Down state flow diagram

6.3.15 Procedures for shared frequency band usage

6.3.15.1 Introduction

Procedures are defined in this subclause that may be used when the IEEE 802.16 system is sharing a frequency band with another system or service to reduce interference to and from other systems, to facilitate coexistence of systems, or to address other reasons. These procedures generally involve mechanisms to facilitate the detection of other users and to avoid and prevent harmful interference into other users. Within these procedures for certain sharing scenarios, regulatory requirements specify that DFS (as defined by ITU Recommendation M.1652 [B35]) shall be used to facilitate sharing with specific spectrum users identified by regulation. A specific spectrum user is a user from a service specifically identified by regulation as requiring protection from harmful interference. When DFS is mandated by regulatory requirements, it shall be implemented according to this specification.

Further, the use of a channel selection algorithm may be required, which results in uniform channel spreading across a minimum number of channels. This specification is intended to be compliant with regulatory requirements such as ERC/DEC/(99)23 [B10]. The timing and threshold parameters used for DFS are specified by each regulatory administration.

The procedures specified in this subclause provide for the following:

— Testing channels for other users including specific spectrum users (6.3.15.2)
— Discontinuing operations after detecting other users including specific spectrum users (6.3.15.3)
— Detecting other users including specific spectrum users (6.3.15.4)
— Scheduling for channel testing (6.3.15.5)
— Requesting and reporting of measurements (6.3.15.6)
— Selecting and advertising a new channel (6.3.15.7)

6.3.15.2 Testing channels for other users (including specific spectrum users)

A BS or SS implementing these procedures shall not use a channel that it knows contains other users or has not been tested recently for the presence of other users. A BS shall test for the presence of other users based on timing parameters and values that may be set locally or, in the case of DFS and the detection of specific spectrum users, may be defined in regulation. Timing parameters include the following:

— **Startup Test Period** before operating in a new channel if the channel has not been tested for other users for at least **Startup Test Period** during the last **Startup Test Valid**.
— **Startup Test Period** before operating in a new channel if a channel was previously determined to contain other users during the last **Startup Test Valid**.
— **Operating Test Period** (where the period is only accumulated during testing) of each **Operating Test Cycle** while operating in a channel. Testing may occur in quiet periods or during normal operation.

An SS may start operating in a new channel without following the above start-up testing procedures if

— The SS moves to the channel as a result of the receipt of a Channel Switch Announcement from the BS.
— The SS is initializing with a BS that is not currently advertising, using the Channel Switch Announcement, that it is about to move to a new channel.

A BS may start operating in a new channel without following the above start-up testing procedures if it has learned from another device by means outside the scope of this standard that it is usable.

6.3.15.3 Discontinuing operations after detecting specific spectrum users

If a BS or an SS is operating in a channel and detects specific spectrum users, it shall discontinue any transmission of the following:

— MAC PDUs carrying data within **Max Data Operations Period**.
— MAC PDUs carrying MAC management messages within **Management Operations Period**.

The values of the above parameters may be set locally or, in the case of DFS, may be defined in regulation.

6.3.15.4 Detecting specific spectrum users

Each BS and SS shall use a method to detect specific spectrum users operating in a channel that satisfies the regulatory requirements, where applicable. The particular method used to perform detection is outside the scope of this standard.

6.3.15.5 Scheduling for channel testing

A BS may measure one or more channels itself and may request any SS to measure one or more channels on its behalf, either in a quiet period or during normal operation.

To request the SSs to measure one channel, the BS shall include in the DL-MAP a Channel Measurement IE as specified in 8.3.6.2.3. The BS that requests the SSs to perform a measurement shall not transmit MAC PDUs to any SS during the measurement interval. If the channel measured is the operational channel, the BS shall not schedule any UL transmissions from SSs to take place during the measurement period.

Upon receiving a DL-MAP with the Channel Measurement IE, an SS shall start to measure the indicated channel no later than **Max. Channel Switch Time** after the start of the measurement period. An SS may stop the measurement no sooner than **Max. Channel Switch Time** before the expected start of the next frame or the next scheduled UL transmission (of any SS). If the channel to be measured is the operating

channel, **Max. Channel Switch Time** shall be equal to the value of RTG, as specified in Table 575, or, in the case of **DFS Max. Channel Switch Time**, may be defined in regulation.

6.3.15.6 Requesting and reporting of measurements

The SS shall, for each measured channel, keep track of the following information:

— Frame Number of the frame during which the first measurement was made
— Accumulated time measured
— Existence of a specific spectrum user on the channel
— Whether a WirelessHUMAN using the same PHY system was detected on the measured channel
— Whether unknown transmissions [such as radio local area network (RLAN) transmissions] were detected on the channel

The BS may request a measurement report by sending a REP-REQ message. This is typically done after the aggregated measurement time for one or more channels exceeds the regulatory required measurement time. Upon receiving a REP-REQ the SS shall reply with a REP-RSP message and reset its measurement counters for each channel on which it reported.

If the SS detects a specific spectrum user on the channel where it is operating during a measurement interval or during normal operation, it shall immediately cease to send any user data if so mandated by regulatory requirements and send at the earliest possible opportunity an unsolicited REP-RSP. The BS shall provide transmission opportunities for sending an unsolicited REP-RSP frequently enough to meet regulatory requirements, where applicable. The SS may also send, in an unsolicited fashion, a REP-RSP when other user interference is detected above a threshold value.

6.3.15.7 Selecting and advertising a new channel

A BS may decide to stop operating in a channel at any time. The algorithm used to decide to stop operating in a channel is outside the scope of this standard, but shall satisfy any regulatory requirements.

A BS may use a variety of information, including information learned during SS initialization and information gathered from measurements undertaken by the BS and the SSs, to assist in the selection of the new channel. The algorithm to choose a new channel is not standardized but, in the case of DFS, shall satisfy any regulatory requirements, including uniform spreading rules and channel testing rules. If a BS would like to move to a new channel, a channel supported by all SSs in the sector should be selected.

A BS shall inform its associated SSs of the new channel using the Channel Nr in the DCD message. The new channel shall be used starting from the frame with the number given by the Channel Switch Frame Number in the DCD message. The BS shall not schedule any transmissions during the last **Max. Channel Switch Time** before the channel change is to take place.

The Uplink Burst Profiles used on the old channel defined shall be considered valid also for the new channel, i.e., the BS need not define new Uplink Burst Profiles when changing channels. When operating in license-exempt bands, the BS shall not send the Frequency (Type = 3) parameter as a part of UCD message.

6.3.16 MAC support for HARQ

The HARQ scheme is an optional part of the MAC. HARQ may be supported only for the OFDMA PHY. The HARQ and associated parameters shall be specified and negotiated using SBC-REQ/RSP messages during the network entry or reentry procedure. The utilization of HARQ is on a per-connection basis; in other words, it can be enabled on a per-CID basis by using the DSA message for transport connections and SBC message for management connections. Two implementations of HARQ are supported: per-terminal (i.e., enabled for all active CIDs for a terminal) and per-connection (i.e., enabled on a per-CID basis by using

the DSA/DSC messages). The two implementation methods shall not be employed simultaneously on any terminal. If HARQ is supported, SS shall support per-terminal implementation. If HARQ is supported, MS shall support per-connection implementation. A burst cannot have a mixture of HARQ and non-HARQ traffic.

One or more MAC PDUs can be concatenated and an HARQ packet formed by adding a CRC to the PHY burst. Figure 141 shows how the HARQ encoder packet is constructed.

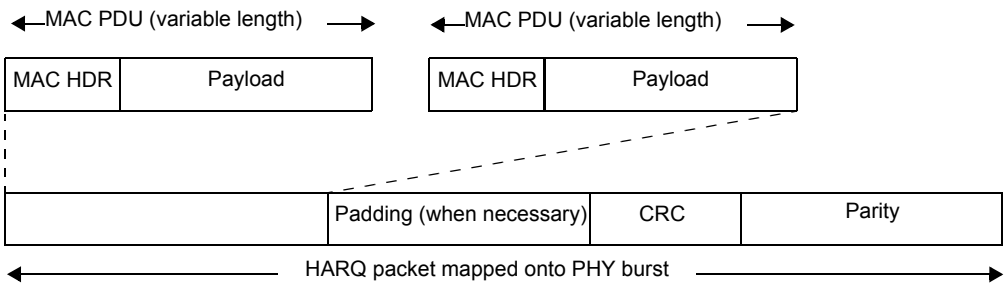

Figure 141—Construction of HARQ encoder packet

The rule of subpacket transmission is as follows:

1) At the first transmission, BS shall send the subpacket labeled '00'.
2) BS may send one among subpackets labeled '00', '01', '10', or '11' in any order.
3) BS can send more than one copy of any subpacket, and can omit any subpacket except the subpacket labeled '00'.

In order to specify the start of a new transmission, one-bit HARQ ID sequence number (AI_SN) is toggled on every successful transmission of an encoder packet on the same HARQ channel. If the AI_SN changes, the receiver treats the corresponding subpacket as a subpacket belongs to a new encoder packet, and discards ever-received subpackets with the same ARQ ID.

The HARQ scheme is a stop-and-wait protocol. The ACK is sent by the SS after a fixed delay (synchronous ACK) defined by HARQ DL ACK delay for DL burst, which is specified in UCD message. Timing of retransmission, however, is flexible and corresponds to the asynchronous part of the HARQ. The ACK/NAK is sent implicitly by toggling the AI_SN bit or together with the HARQ ACK IE by the BS. The ACK/NAK is sent by an SS using the UL ACK subchannel. Transmission of HARQ Bitmap IE by BS is optional.

When the HARQ ACK IE is used, the bitmap contents indicate whether corresponding HARQ bursts have been received correctly. The MS shall retransmit the HARQ burst if the AI_SN bit is not toggled, and the MS shall transmit a new HARQ burst if the AI_SN bit is toggled.

The HARQ scheme supports multiple HARQ channels per connection, each of which may have an encoder packet transaction pending. The number of HARQ channels in use per connection is determined through DSA-REQ/DSA-RSP handshake or REG-REQ/REG-RSP handshake. The total number of HARQ channels in use per terminal is determined through capability negotiation using SBC-REQ/SBC-RSP handshake. These ARQ channels are distinguished by an HARQ channel identifier (ACID). The ACID for any subpackets can be uniquely identified by the control information carried in the MAPs.

HARQ can be used to mitigate the effect of channel and interference fluctuation. HARQ renders performance improvement due to SNR gain and time diversity achieved by combining previously erroneously decoded packet and retransmitted packet.

HARQ is enabled on a CID basis.

To deal with ordering implication of HARQ, each connection may enable ARQ or PDU SN mechanisms on top of the enabled HARQ connection.

Time stamp of first HARQ burst transmission is used as the time relevance for all MAC-specific management messages and subheaders (e.g., BRs, fast feedback, ARQ feedbacks) that have been transmitted in this burst.

If a Power Saving Class containing an HARQ enabled connection is active or if there is an ongoing periodic scanning procedure, then upon traffic, the BS or MS may request the deactivation of the PSC or the scanning procedure, or continue with the operation of the PSC or scanning and transmit data and ACK/NACK feedback during availability intervals (in case MS is in sleep mode) or during interleaving intervals (in case MS is performing periodic scanning). The BS shall not expect the MS to transmit ACK/NACK feedback during unavailability intervals or scan intervals even in case such allocations are scheduled.

6.3.16.1 Subpacket generation

HARQ operates at the FEC block level. The FEC encoder is responsible for generating the HARQ subpackets, as defined in the relevant PHY section. The subpackets are combined by the receiver FEC decoder as part of the decoding process.

Two main variants of HARQ are supported: chase combining and incremental redundancy (IR). SS may support IR. MS may support either chase combining or IR. For IR, the PHY will encode the HARQ packet generating several versions of encoded subpackets. Each subpacket shall be uniquely identified using a subpacket identifier (SPID). For chase combining, the PHY shall encode the HARQ packet generating only one version of the encoded packet. As a result, no SPID is required for chase combining.

For DL HARQ operation, the BS will send a version of the encoded HARQ packet. The SS will attempt to decode the encoded packet on this first HARQ attempt. If the decoding succeeds, the SS will send an ACK to the BS. If the decoding fails, the SS will send a NAK to the BS. In response, the BS will send another HARQ attempt. The BS may continue to send HARQ attempts until the SS successfully decodes the packet and sends an acknowledgement.

For IR, each HARQ attempt may have a uniquely encoded subpacket and may have different burst profile. The rule of subpacket transmission is as follows:

a) At the first transmission, the transmitting side shall send the subpacket labeled 0b00.
b) The transmitting side may send one among subpackets labeled 0b00, 0b01, 0b10, or 0b11 in any order.
c) The transmitting side can send more than one copy of any subpacket and can omit any subpacket except the subpacket labeled 0b00.

In order to specify the start of a new transmission, one-bit HARQ identifier sequence number (AI_SN) is toggled on every HARQ retransmission attempt on the same HARQ channel. If the AI_SN changes, the receiver treats the corresponding HARQ attempt as belonging to a new encoder packet and discards previous HARQ attempt with the same ARQ ID.

The HARQ scheme is basically a stop-and-wait protocol where the retransmissions are sent only after receiving a NACK signal for the previous transmission or the ACK has not been received within the duration defined by HARQ ACK Delay for UL burst (i.e., HARQ data sent by SS) or by HARQ ACK delay for DL burst (i.e., HARQ data sent by BS). As acknowledgement of DL HARQ burst sent by the BS, the ACK is sent by the SS after a fixed delay (synchronous ACK) defined by HARQ_ACK_Delay for DL Burst, which is specified in the UCD message (see Table 571). As acknowledgement of UL HARQ burst sent by

the SS, the ACK is sent by the BS after a fixed delay (synchronous ACK) defined by HARQ ACK delay for UL Burst, which is specified in the DCD message (see Table 575). Timing of retransmission is, however, flexible and corresponds to the asynchronous part of the HARQ. The ACK/NAK is sent by the BS using the HARQ Bitmap IE, and sent by an SS using the fast feedback UL subchannel.

6.3.16.2 DL/UL ACK/NAK signaling

For DL HARQ, fast ACK/NAK signaling is necessary. For the fast ACK/NAK signaling of DL HARQ channel, a dedicated PHY ACK/NAK channel is designed in UL. For the fast ACK/NAK signaling of UL fast feedback, HARQ ACK message is designed. The HARQ ACK/NAK message for UL HARQ may be omitted.

6.3.16.3 HARQ parameter signaling

The parameters for each subpacket should be signaled independent of the subpacket burst itself. The parameters for each subpacket include

— SPID: The BS shall set this field to the subpacket identifier for the subpacket transmission.
— ACID: The BS shall set this field to the ARQ channel identifier for the subpacket transmission.
— AI_SN: This toggles between “0” and “1” on successfully transmitting each encoder packet with the same ARQ channel.

For the signaling of those parameters, HARQ Control IE is defined, and the IE is to be placed in a Compact MAP IE, which allocates a data burst.

6.3.17 DL CINR report operation

This subclause applies to OFDMA mode only. The SS transmits either a physical CINR metric or an effective CINR metric using the REP-RSP MAC message or fast-feedback (CQICH) channel.

The physical CINR is defined in 8.4.12.3. The effective CINR is a function of physical CINR, varying channel conditions and implementation margin. The exact measurement method used to derive the effective CINR is implementation-specific. The reported effective CINR feedback shall correspond to the MCS in Table 520 with which the expected block error rate, assuming a specific block length, is closest to, but does not exceed, a specific target average error rate. The target average error rate and assumed block length are defined in profiles. When HARQ is employed, the computed block error rate shall only pertain to the first HARQ transmission.

The metric can be reported for one of the preamble, midamble, or a permutation zone. The manner in which the metric is derived for a permutation zone is in general implementation specific; however, the BS may explicitly instruct the SS to report the metric based on measurements from data or pilots.

The SS shall implement at least one measurement scheme and negotiate its capability.

6.3.17.1 DL CINR report with REP-RSP MAC message

The REP-RSP message shall be sent by the SS in response to a REP-REQ message from the BS to report estimation of DL physical CINR or effective CINR.

REP-REQ shall indicate whether the reported metric shall apply to the preamble or to a specific permutation zone. For the report on the preamble, BS can request SS to report the CINR based on the measurement from the preamble for the different frequency reuse factors or band AMC configuration. For report on a specific permutation zone, the REP-REQ indicates the report type configuration, which includes the zone for which the CINR is to be estimated. The zone is identified by its permutation type (PUSC with Use All SC = 0,

PUSC with Use All SC = 1, FUSC, Optional FUSC, AMC zone, Safety channel), and PRBS ID. Also, the same permutation and PRBS ID can be differentiated by the STC or AAS indication. Therefore, to avoid ambiguity in zone identification, the BS should never allocate in a given frame two different zones with the same permutation type, same PRBS_ID and same STC or AAS indication. The SS shall not perform a measurement in a frame in which the specified zone is not allocated, and shall retain the previous measurement. For PUSC permutation zones, the SS may be instructed to report CINR estimate for only a subset of the major groups. The SS may send a REP-RSP message in an unsolicited fashion.

In the case where the requested report configuration does not differ from the previous REP-REQ message in which CINR report was requested, the SS should send its response within three frames. Otherwise, MS should respond within the period defined by Max Report Processing Time. The BS should provide the SS with a bandwidth allocation for transmission of the response. A REP-REQ message shall not contain more than one TLV requesting any type of CINR report.

For the Band-AMC differential CINR reports, the effective CINR metric shall not be used.

If the BS instructs CINR reporting on an AAS zone or zone with dedicated pilots, then the SS shall report the estimate of the physical or effective CINR measured from dedicated AAS preamble/pilot or data subcarriers that belong to slots allocated to it. For DL-PUSC in AAS mode or zone with dedicated pilots, if major-group indication has been specified in the measurement configuration then the reported CINR shall be measured on all indicated major groups rather than on slots allocated to the SS.

When calculating CINR from the midamble in an STC zone with dedicated pilots, the MS shall determine the best number of streams and precoder matrix (the choice is implementation specific), and calculate the Physical CINR if rank-1 and Avg_CINR if rank-2 according to 8.4.11.1, under assumption that the BS applies the chosen precoder and number of streams.

6.3.17.2 Periodic CINR report with fast-feedback (CQICH) channel

After an SS turns on its power, the subchannels that can be allocated to the SS are all subchannels the SS can support except the band AMC subchannel. As soon as the BS and the SS know the capabilities of both entities modulation and coding, the BS may allocate a CQICH subchannel using a CQICH IE (CQICH Allocation IE, CQICH_Enhanced_Alloc_IE, or CQICH Control IE) for periodic CINR reports (physical CINR or effective CINR).

CQICH Allocation IE may indicate whether the reported metric shall apply to preamble or to a specific permutation zone. For the report on the preamble, BS can request SS to report the CINR based on the measurement from the preamble for the different frequency reuse factors. For the report on the specific permutation zones, the CQICH Allocation IE indicates the report type configuration, which includes the zone for which the CINR is to be estimated. The zone is identified by its permutation type (PUSC with Use All SC = 0, PUSC with Use All SC = 1, AMC AAS zone, FUSC, Optional FUSC, Safety channel), and PRBS ID. Also, the same permutation and PRBS ID can be differentiated by the STC or AAS indication. Therefore, to avoid ambiguity in zone identification, the BS should never allocate in a given frame two different zones with the same permutation type, same PRBS_ID and same STC or AAS indication. The SS shall not perform a measurement in a frame in which the specified zone is not allocated, and shall retain the previous measurement. For PUSC permutation zones, the SS may be instructed to report an estimate for only a subset of the major groups. The first CQICH Allocation IE sent to the SS shall indicate the report type configuration. Only a subsequent CQICH Allocation IE may update the report type configuration for CQI channel based reports. See 8.4.5.4.11 and 8.4.12.3. CQICH allocated through CQICH Control IE shall use the measurement configuration defined in the latest CQICH Allocation IE. The quantization and encoding of physical CINR and effective CINR onto the fast-feedback channel is defined in 8.4.11.

Channel Quality Information reported by a MS in Frame n pertains to measurements collected in previous frames up to and including Frame n–1, but excluding Frame n. The first CQICH report following the

CQICH allocation IE may contain invalid CQI data if the CQICH report is sent in the frame immediately following the frame in which the CQICH allocation IE was received.

A effective CINR reported on the CQI is interpreted as the SS's recommendation that best meets the specified target error rate for the duration remaining until the next scheduled CQI report.

The SS may send an unsolicited REP-RSP message if it decides that the last effective CINR report is no longer appropriate for the duration remaining until the next periodic CQI transmission. The message is used to specify the new effective CINR for the CQI channel. The CQI channel is identified by its CQICH_ID or by the SS's CID if the CQI channel is allocated without a CQICH_ID.

An SS may support two concurrent CQI channels (not necessarily being scheduled in the same frame)—one for effective CINR reports and one for physical CINR reports—both of which refer to the same zone. In such a case, both reported values shall be derived from the same underlying set of measurements. The CQI channel is identified by the CQICH_ID field in the CQICH Allocation IE. Support for more than one concurrent CQI channel is optional and negotiated in 11.8.3.5.8.

For the BandAMC differential CINR reports, the effective CINR scheme shall not be used.

If the BS instructs CINR reporting on an AAS zone or zone with dedicated pilots, then the SS shall report the estimate of the physical or effective CINR measured from dedicated AAS preamble/pilot or data subcarriers that belong to slots allocated to it. For DL-PUSC in AAS mode or zone with dedicated pilots, if major-group indication has been specified in the measurement configuration, then the reported CINR shall be measured on all indicated major groups rather than on slots allocated to the SS.

At any time, the BS may deallocate the SS's CQICH by putting another CQICH IE with Duration d = 0000. Before the CQICH life timer (which is set at the receipt of the CQICH IE) expires, sending another CQICH IE overwrites all the information related to the CQICH such as Allocation Index, Period, Frame offset, and Duration. Hence, unless the BS refreshes the timer, the SS should stop reporting as soon as the timer expires. However, in case of sending the MAP IE for reallocation or deallocation, the BS should make sure if the previous CQICH is released before it is reallocated to another SS.

The SS sends the REP-RSP message in an unsolicited fashion to BS to trigger band AMC operation. The triggering conditions are given by TLV encodings in UCD messages. For SS, the REP-RSP (see 11.12 for the TLV encodings) includes the CINR measurements of four best bands. For MS, the REP-RSP (see 11.12 for the TLV encodings) includes the CINR measurements of four or five selected best bands (see 8.4.6.3.2). Only when an SS reports to its BS the CINR measurements of band AMC channels, its logical definition is made differently, as follows. If the number of physical bands is 48 (2048-FFT in 20 MHz) and the number of maximum logical bands is 12, then, the four contiguous bands are paired and renumbered the same as a 12 logical band system. If the number of physical bands is 24, the two contiguous bands are just paired and renumbered the same as a 12 logical band system. If the original number of physical bands is equal to or less than 12, the logical definition is not necessary.

The BS acknowledges the trigger from SS by sending a unicast MAC PDU to the SS using band AMC subchannels. From the next frame when the SS sent the REP-RSP, the SS starts reporting the differential of CINR from preamble or midamble for four or five selected bands (increment: 1 and decrement: 0 with a step of 1 dB) on its CQICH. The CQICH shall then be used for differential Band-AMC reports, regardless of the report configuration specified in the CQICH IE that allocated the current CQI channel. If the BS does not send a unicast MAC PDU to the SS using band AMC subchannels or send REP-REQ to indicate reporting band AMC CINR within the specified delay (CQICH band AMC transition delay) in the UCD message, the SS shall resume to report CINR according to the report configuration specified in the latest CQICH Allocation IE. In addition, if the BS sends a unicast MAC PDU to the SS using nonband AMC subchannels, or the CQICH Allocation IE indicates to report CINR on a zone other than the band AMC zone, the SS shall resume to report CINR according to the report configuration specified in the latest CQICH Allocation IE.

When the BS wants to trigger the transition to band AMC mode or update the CINR reports, it sends the REP-REQ message (see 11.11 for the TLV encodings). When the SS receives the message, it replies with REP-RSP. After BS receives the REP-RSP, the same procedure shall be used as in the triggering by the SS.

The transition of the CQICH reporting scheme from band AMC to nonband AMC mode can be made by SS and BS. At any time, SS can send REP-RSP of reporting CINR of the nonband AMC mode to trigger a transition of the CQICH reporting scheme to the nonband AMC mode. When BS receives the REP-RSP, BS may send CQICH Allocation IE to the SS to direct the nonband AMC reporting scheme. When BS does not send the CQICH Allocation IE and/or SS does not receive the CQICH Allocation IE, SS shall keep reporting the differential CINR through CQICH. At any time, BS can send CQICH Allocation IE to trigger a transition of the CQICH reporting scheme to the nonband AMC mode.

The BS may extend the duration of an existing CQICH allocation while remaining in the Band AMC differential CINR reporting mode by sending a CQICH Allocation IE to the MS and setting the "Report Configuration Included" flag to zero. This CQICH allocation IE shall contain the CQICH ID of the CQI channel being used to report Band AMC differential CINR.

6.3.17.2.1 Conditions of transition triggering

a) Normal subchannel -> AMC transition

   If the maximum of the standard deviations of the individual band's CINR measurements from preamble is lower than the band AMC allocation threshold and the average CINR of the whole bandwidth is larger than the band AMC entry average CINR for at least Band AMC Allocation Timer frames, SS using normal subchannels sends an unsolicited REP_RSP to request mode transition. REP_RSP message contains band bitmap indicating the best four bands and their CINR measurements. The standard deviation of the individual band's CINR measurement shall be measured over time.

b) AMC -> Normal subchannel transition

   If the maximum of the standard deviations of the individual band's CINR measurements from preamble for at least Band AMC Release Timer frames is higher than the band AMC release threshold, SS in band AMC mode may trigger mode transition from band AMC to normal subchannel. The standard deviation of the individual band's CINR measurement shall be measured over time.

c) Band change

   If the CINR of any one band measured from preamble or midamble excluding the best four bands previously selected for band AMC allocations is greater than the average CINR of the AMC reporting bands for at least Band AMC Allocation Timer, SS sends an unsolicited REP_RSP that contains band bitmap indicating the best four bands and their CINR measurements.

6.3.18 Optional band AMC operations using 6-bit CQICH encoding

6.3.18.1 Call flows for mode transitions between normal subchannel and band AMC

Three allocated CQICH codewords are allocated for indicating the transitions. Let the first codeword be C1 (the 62nd codeword in Table 524: 0b111101), the second one C2 (the 63rd codeword: 0b111110), and the third one C3 (the 64th codeword: 0b111111).

a) Normal -> Band AMC

   There are two possibilities for band AMC transition.

   1) MS initiated: The MS transmits C1, and the BS that receives the codeword transmits REP-REQ that includes a Type 1.3 TLV with value 0b01 (Band AMC channel). The MS replies with REP-RSP that includes a Type 2.4 TLV (Enhanced Band AMC Report TLV) having the CINR

measurements of the five best bands in the same frame as C2 or after transmitting C2. From the next frame after transmitting REP-RSP, the MS reports the Band AMC differential CQI of the selected bands. The BS may deny the MS request for mode transition as specified in 6.3.17.2.

2) BS initiated: The BS may send an unsolicited REP-REQ that includes a type 1.3 TLV with value 0b01 (Band AMC channel) to switch the allocation mode from normal subchannel to band AMC subchannel. The MS replies with REP-RSP that includes TLV type 2.4 (Enhanced Band AMC Report) having the CINR measurements of the five best bands in the same frame as C2 or after transmitting C2. The MS reports the Band AMC differential CQI of the selected bands in the frame following the REP-RSP transmission.

b) Band AMC -> Normal

The MS transmits C3. The MS reports the regular CQI of the whole bandwidth. Until the BS allocates normal subchannels, the MS repeats this process. In other words, the MS transmits the C3 and the regular CQI alternately until the normal subchannel is allocated to it.

c) Band change

The MS and its BS follows the same procedure of the transition from normal subchannel to band AMC.

d) Refreshing the CINR of the ~~four~~ five best bands without band changes

The MS transmits an unsolicited REP-RSP at the same frame or after transmitting C2.

6.3.18.2 Conditions of transition triggering

a) Normal subchannel -> AMC transition

If the maximum of the standard deviations of the individual band's CINR measurements is lower than the band AMC allocation threshold and the average CINR of the whole bandwidth is larger than the band AMC entry average CINR for at least Band AMC Allocation Timer frames, MS using normal subchannels sends an unsolicited to request mode transition and transmits a special codeword on its CQICH to inform its BS of its request of mode transition. REP-RSP message contains band bitmap indicating the best five bands and their CINR measurements.

b) AMC -> Normal subchannel transition

If the maximum of the standard deviations of the individual band's CINR measurements for at least Band AMC Release Timer frames is higher than the band AMC release threshold, MS in band AMC mode may trigger mode transition from band AMC to normal subchannel.

c) Band Change

If the CINR of any one band excluding the best five bands previously selected for band AMC allocations is greater than the average CINR of the AMC reporting bands for at least Band AMC Allocation Timer, the AMC allocation bands should be changed by following the procedure given above.

6.3.19 Data delivery services for mobile network

Data delivery service is associated with certain predefined set of QoS-related service flow parameters. Note that definition of Data Delivery Service does not include assignment of specific values to the parameters.

6.3.19.1 Types of data delivery services

Type of Data Delivery Service identifies specific set of QoS parameters for the associated DL service flow (see Table 196).

Table 196—Type of data delivery services

Type	Symbolic name of service type	Meaning
0	UGS	Unsolicited grant service.
1	RT-VR	Real-time variable-rate service.
2	NRT-VR	Non-real-time variable-rate service.
3	BE	Best effort service.
4	ERT-VR	Extended real-time variable-rate service.

Detailed definitions for the data delivery services of different types are given in 6.3.19.1.1 through 6.3.19.1.5.

6.3.19.1.1 Unsolicited grant service (UGS)

UGS is to support real-time applications generating fixed-rate data. This data can be provided as either fixed- or variable-length PDUs. The parameters of the service are specified in Table 197.

Table 197—UGS parameters

Parameter	Meaning
Tolerated jitter	According to 11.13.12
if (Fixed length SDU){	—
SDU size	According to 11.13.15
}	—
Minimum reserved traffic rate	According to 11.13.8
Maximum Latency	According to 11.13.13
Request/Transmission Policy	According to 11.13.11
Unsolicited Grant Interval	Mandatory for UL only, as in 11.13.19

6.3.19.1.2 Real-time variable-rate (RT-VR) service

This service is to support real-time data applications with variable bit rates, which require guaranteed data rate and delay. The parameters of the service are specified in Table 198.

Table 198—RT-VR service parameters

Parameter	Meaning
Maximum Latency	As specified in 11.13.13
Minimum Reserved Traffic Rate	As defined in 11.13.8 with averaging over time
Maximum Sustained Traffic Rate	Optional, if absent defaulting to Minimum Reserved Traffic Rate. As specified in 11.13.8, with averaging over time. This value shall be bigger than Minimum Reserved Traffic Rate.
Traffic Priority	According to 11.13.5
Request/Transmission Policy	According to 11.13.11
Unsolicited Polling Interval	Mandatory for UL only, as in 11.13.20

6.3.19.1.2.1 Description of the service

Let S denote the amount of data arrived to the transmitter's MAC SAP, during time interval T = Time Base; and let R = Minimum Reserved Traffic Rate. Then the BS is supposed, during each time interval of the length (Time Base), to allocate to the connection resources sufficient for transferring an amount of data according to the value of Minimum Reserved Traffic Rate (11.13.8) i.e., at least min $\{S, R \times T\}$. Any SDU should be delivered within a time interval D = Maximum Latency. In the case when the amount of data submitted to the transmitter's MAC SAP exceeds (Minimum Reserved Traffic Rate) $\times$ T, delivery of each specific SDU is not guaranteed.

6.3.19.1.3 Non-real-time variable-rate (NRT-VR) service

This QoS profile shall support applications that require a guaranteed data rate but are insensitive to delays. It is desirable in certain cases to limit the data rate of these services to some maximum rate. The QoS profile is defined by the parameters defined in Table 199.

Table 199—NRT-VR service parameters

Parameter	Meaning
Minimum Reserved Traffic Rate	As defined in 11.13.8 with averaging over time.
Maximum Sustained Traffic Rate	Optional, if absent defaulting to Minimum Reserved Traffic Rate. As specified in 11.13.8, with averaging over time. This value shall be bigger than Minimum Reserved Traffic Rate.
Traffic Priority	According to 11.13.5.
Request/Transmission Policy	According to 11.13.11.

6.3.19.1.3.1 Description of the service

Let S denote the amount of data arrived to the transmitter's MAC SAP, during time interval T = Time Base; R = Minimum Reserved Traffic Rate. Then the BS is supposed during each time interval of the length (Time Base) to allocate to the connection resources sufficient for transferring amount of data according to the value of Minimum Reserved Traffic Rate (11.13.8) i.e., at least min $\{S, R \times T\}$. In the case when the amount of data submitted to the transmitter's MAC SAP exceeds (Maximum Sustained Traffic Rate) $\times$ T, delivery of each specific SDU is not guaranteed.

6.3.19.1.4 Best effort (BE) service

BE service is for applications with no rate or delay requirements. The parameters of the service are shown in Table 200.

Table 200—BE service parameters

Parameter	Meaning
Maximum Sustained Traffic Rate	As specified in 11.13.6
Traffic Priority	According to 11.13.5
Request/Transmission Policy	According to 11.13.11

6.3.19.1.5 Extended real-time variable-rate (ERT-VR) service

ERT-VR service is to support real-time applications with variable data rates, which require guaranteed data and delay, for example VoIP with silence suppression. The parameters required for this service are in Table 201.

Table 201—ERT-VR service parameters

Parameter	Meaning
Maximum Latency	As specified in 11.13.13
Tolerated Jitter	As specified in 11.13.12
Minimum Reserved Traffic Rate	As specified in 11.13.8
Maximum Sustained Traffic Rate	As specified in 11.13.6
Traffic Priority	As specified in 11.13.5
Request/Transmission Policy	As specified in 11.13.11
Unsolicited Grant Interval	Mandatory for UL only, as specified in 11.13.19

6.3.20 Sleep mode for mobility-supporting MS

6.3.20.1 Introduction

Sleep mode is a state in which an MS conducts prenegotiated periods of absence from the serving BS air interface. These periods are characterized by the unavailability of the MS, as observed from the serving BS, to DL or UL traffic. Sleep mode is intended to minimize MS power usage and decrease usage of serving BS air interface resources. Sleep mode may also be used to support co-located coexistence. Implementation of sleep mode is optional for the MS and mandatory for the BS.

For each involved MS, the BS keeps one or several contexts, each one related to certain Power Saving Class. Power Saving Class is a group of connections that have common demand properties. For example, all BE and NRT-VR connections may be marked as belonging to a single class while two UGS connections may belong to two different classes in case they have different intervals between consequent allocations. A connection may belong to one or several Power Saving Classes. When BS or MS activates a new PSC, which contains CID already existing in another active PSC, it shall immediately deactivate the PSC that is currently active.

It is not allowed to activate a new PSC, by unsolicited manner, which contains CID already existing in another active PSC.

In case MS or BS defines a new PSC definition using a Power_Saving_Class_ID that is already in use, the new definition replaces the existing definition with the same Power_Saving_Class_ID provided that the affected power saving class has already been deactivated.

If MS and BS have indicated support of only one active PSC in the Power saving class capability TLV, the currently active PSC shall be deactivated immediately upon activation of another PSC.

Power Saving class may be repeatedly activated and deactivated. Activation of certain Power Saving Class means starting sleep/listening windows sequence associated with this class. Algorithm of choosing Power Saving Class type for certain connections is outside of the scope of the standard. When a PSC I or PSC II is reactivated, the MS shall reset the sleep window size to the initial-sleep window size according to the definition of the PSC.

There are three types of power saving classes, which differ by their parameter sets, procedures of activation/ deactivation, and policies of MS availability for data transmission.

Unavailability interval in DL or UL is a time interval that does not overlap with any listening window of any active power saving class defined in the corresponding direction.

Availability interval in UL or DL is a time interval that does not overlap with any unavailability interval in the corresponding direction.

During the unavailability interval in DL (or UL), the BS shall not transmit to the MS; therefore, the MS may power down one or more physical operation components or perform other activities that do not require communication with the BS (e.g., scanning neighbor BSs, associating with neighbor BSs). If there is a connection at the MS, which is not associated with any active power saving class, the MS shall be considered available on permanent basis.

During Availability interval in the DL (or UL), the MS is expected to receive all DL transmissions (or transmit in the UL allocations) in the same way as in the state of normal operations (no sleep). In addition, the MS shall examine the DCD and UCD change counts and the frame number of the DL-MAP PHY Synchronization field to verify synchronization with the BS. Upon detecting a changed DCD Count in DL MAP and/or UCD Count in UL MAP, unless using the Broadcast Control Pointer IE for tracking and

updating DCD and/or UCD changes, the MS shall continue reception until receiving the corresponding updated message.

If the BS transmits the Broadcast Control Pointer IE, the MS shall read and react to this message according to the following:

— If the DCD Count in DL MAP and/or UCD Count in UL MAP is different from Configuration Change Count of which DCD and/or UCD MS retains, even if scheduled to be in a sleep interval the MS shall awaken at DCD_UCD Transmission Frame in time to synchronize to the DL and decode the DCD and/or UCD message in the frame, if present. If the MS fails to decode one or both of DCD and UCD, or no DCD or UCD was transmitted by the BS, the MS shall continue decoding all subsequent frames until it has acquired updated DCD or updated UCD or both according to the change status of DCD Count and UCD Count. Upon successful completion of DCD or UCD or both DCD and UCD decoding according to the change status of DCD Count and UCD Count, the MS shall immediately return to regular sleep mode operation.
— If Skip Broadcast_System_Update is set to 0, even if scheduled to be in a sleep interval, the MS shall awaken at Broadcast_System_Update_Transmission_Frame in time to synchronize to the DL and decode and read the DL-MAP and any message, if present. Upon completion, the MS shall immediately return to regular sleep mode operation.

MS in sleep mode may request BS to allocate a scan duration by sending MOB_SCN-REQ in case trigger action for sending MOB_SCN-REQ message is enabled by Enabled-Action-Triggered TLV. When the PSC associated with the Basic CID has Traffic_triggered_wakening_flag set to 0, the MS's PSC associated with the Basic CID shall be regarded as deactivated from the start frame of the scanning procedure specified by the BS's MOB_SCN-RSP. However, if the MOB_SCN-RSP scan duration field indicates the denial of scanning interval allocation, the PSC shall remain activated.

The PSC associated with the Basic CID shall not be activated during scanning.

The MS may include the Sleep Mode Reactivation Information TLV (see 11.20.2) in its MOB_SCN-REQ to request automatic reactivation of the PSC associated with its Basic CID that has Traffic_triggered_wakening_flag set to 0. The BS may then include the Sleep Mode Reactivation Information TLV in its MOB_SCN-RSP to confirm the automatic reactivation and specify the frame offset from the end of the scanning procedure (i.e., end of the last scanning interval) to the start of the reactivated sleep mode operation. If the BS wants to deny the MS request for automatic PSC reactivation, the BS shall not include the Sleep Mode Reactivation Information TLV in the MOB_SCN-RSP. When this PSC is reactivated, the sleep window shall be initialized by the original PSC definition. If the MS terminates the scanning procedure abnormally, it shall consider the PSC associated with its Basic CID as deactivated.

During Unavailability intervals for MS, the BS may buffer (or it may drop) MAC SDUs addressed to unicast connections bound to an MS. The BS may choose to delay transmission of SDUs addressed to multicast connections until the following availability interval, common for all MSs participating in the multicast connection.

The MS may initiate sleep mode by transmitting MOB_SLP-REQ message, which defines the requested sleep profile. The BS may comply with the start frame as recommended by the MS and set "start frame" in MOB_SLP-RSP message as recommended by MS (first frame of unavailable interval). The BS may set start frame to the first frame of the second unavailable interval. The BS may set start frame to any other value, disregarding MS recommendation.

The MS and the serving BS shall locally deactivate all PSCs when sending or receiving a MOB_HO-IND, MOB_MSHO-REQ, or MOB_BSHO-REQ message and before handover to the target BS.

After the MS completes handover to target BS, the MS shall discard all the sleep mode related information associated with previous serving BS.

Also, a new Serving BS shall regard any MS performing handover as operating in normal operation without entering sleep mode first. The MS may include Power_Saving_Class_Parameters (see Table 583) or Unified TLV encoding for Power Saving Class Parameters (see Table 583) in the RNG-REQ message only to define Power Saving Classes. The MS may enter sleep mode after HO by activation of Power Saving Classes via MAC management message exchange. If the MS enters sleep mode, it shall transmit MOB_SLP-REQ message or Bandwidth request and uplink sleep control header to activate the previously defined Power Saving Class. Also, BS may transmit MOB_SLP-RSP or DL Sleep control extended subheader in unsolicited manner in order to activate the previously defined Power Saving Class.

In MOB_TRF-IND message with negative indication for the MS, the BS may include an updated SLPID for an MS by appending SLPID_Update TLV (11.1.7.2) in the MOB_TRF-IND message. When the received MOB_TRF-IND message includes a SLPID_Update TLV, the MS shall decode the TLV and, if addressed, update its SLPID to the new one. The MS shall identify if the SLPID_Update TLV addresses it by searching through the SLPID_Update TLV and determining if the MS's current SLPID matches the Old_SLPID in the SLPID_Update TLV. If they match, then the MS shall set its SLPID to the New_SLPID provided in the SLPID_Update TLV. For an example of sleep mode operation, see Annex D.

MS in sleep mode may participate in periodic ranging. The procedure includes serving BS allocation of UL transmission opportunity for periodic ranging in which the MS shall transmit RNG-REQ message. After transmittal of the RNG-REQ, the MS shall wait for the RNG-RSP message. Participation in the periodic ranging procedure does not change state of power saving classes.

MS in sleep mode may maintain triggers to perform event-based actions based on the Trigger TLV encodings for CINR, RSSI, and RTD trigger (see Table 576) received in DCD message or the Neighbor BS trigger TLV encodings for Neighbor BS CINR and Neighbor BS RSSI trigger (see Table 611). received in MOB_NBR-ADV message. For this purpose, MS may include Enabled-Action-Triggered TLV (11.1.7.1) in RNG-REQ or MOB_SLP-REQ message requesting to associate specific actions with certain triggers. In response to the RNG-REQ or MOB_SLP-REQ message, BS shall transmit RNG-RSP or MOB_SLP-RSP message including Enabled-Action-Triggered TLV provided that it allows to activate the requested type of Power Saving Class. After receiving RNG-RSP or MOB_SLP-RSP message including the Enabled-Action-Triggered TLV set to one for the specific action, MS shall perform the action indicated in the Enabled-Action-Triggered TLV following function/action specified in DCD or MOB_NBR-ADV message. If MS does not include Enabled-Action-Triggered TLV in the RNG-REQ or MOB_SLP-REQ message, BS shall not include Enabled-Action-Triggered TLV in the RNG-RSP or MOB_SLP-RSP message. If the Enabled-Action-Triggered TLV is set to zero for the specific action or the Enabled-Action-Triggered TLV is not included by the BS, MS shall not perform and BS shall not expect the event-triggered action while the MS is in sleep mode.

The serving BS may verify MS exit from sleep mode by making a UL allocation for MS at any time subsequent to supposed wakening event (for example, positive indication in MOB_TRF-IND message or deactivation indicated by the unsolicited MOB_SLP-RSP message or DL Sleep control extended subheader) by transmitting at least BR message. If there are no data to transmit, BR field of the BR PDU shall be set to 0.

When receiving the MOB_SLP-RSP or DL Sleep control extended subheader in sleep mode, the MS shall follow the latest configuration and operation instruction that the BS requested.

Figure 142 describes example of behavior of MS with two power saving classes: Class A contains several connections of BE and NRT-VR type, Class B contains a single connection of UGS type. Then for Class A the BS allocates sequence of listening window of constant size and doubling sleep window. For Class B the BS allocates sequence of listening window of constant size and sleep window of constant size. The MS is

considered unavailable (and may power down) within windows of unavailability, which are intersections of sleep windows of A and B.

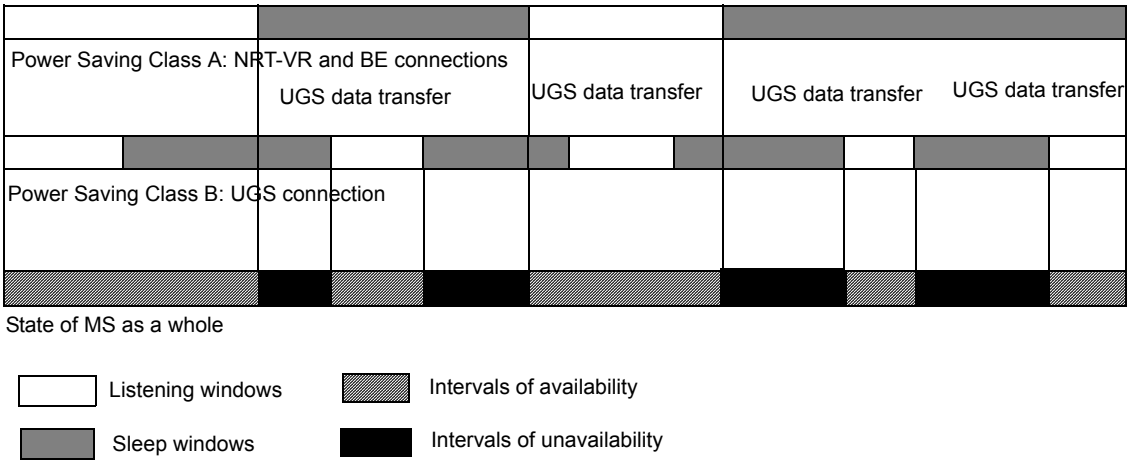

Figure 142—Example of sleep mode operations with two power saving classes

6.3.20.2 Power saving classes of type I

Power saving class of type I is recommended for connections of BE, NRT-VR type.

For definition and/or activation of one or several power saving classes of type I the MS shall send MOB_SLP-REQ or BR and UL sleep control header (for activation only); the BS shall respond with a MOB_SLP-RSP message or DL sleep control extended subheader. The MS may retransmit MOB_SLP-REQ message or BR and UL sleep control header if it does not receive the MOB_SLP-RSP message or DL sleep control extended subheader before the T43 timer expires.

Alternatively, Power Saving Class may be defined/activated/deactivated by TLVs (i.e., Power Saving Class Parameters TLVs) transmitted in RNG-REQ and RNG-RSP message. In case of HO, Power Saving Class Parameters TLVs in RNG-REQ/RSP are used only to define Power Saving Class. When an MS or a BS specifies PSCs by using a RNG-REQ/RSP message, it shall include either a Power_Saving_Class_Parameters (see Table 583) or a Unified TLV encoding for Power Saving Class Parameters (see Table 584) for each PSC. When the MS includes the Unified TLV encoding for Power saving Class Parameters for a PSC in the RNG-REQ message, the BS shall include only Unified TLV encoding for Power saving Class Parameters for the PSC in RNG-RSP message in response to the MS's request. Otherwise, the BS shall include Power_Saving_Class_Parameters for the RNG-RSP message in response to the MS’s request.

The following are relevant parameters:

— Initial-sleep window
— Final-sleep window base
— Listening window
— Final-sleep window exponent
— Start frame number for first sleep window
— TRF-IND required
— Traffic triggered wakening flag

Power saving class becomes active at the frame specified as start frame number for first sleep window. Each next sleep window is twice the size of the previous one, but not greater than specified final value.

$$sleepWin = min(2 \cdot prevSleepWin, finalSleepWinBase \cdot 2^{finalSlpWinExp})$$

where

sleepWin	is the sleep window
prevSleepWin	is the previous sleep window
finalSleepWinBase	is the final-sleep window base
finalSlpWinExp	is the final-sleep window exponent

Sleep windows are interleaved with listening windows of fixed duration. The BS terminates the active state of the power saving class by sending MOB_TRF-IND message that includes a positive indication for the SLPID assigned to the power saving class. A traffic indication (MOB_TRF-IND) message shall be sent by the BS on Broadcast CID or Sleep Mode Multicast CID during listening window to alert MS of appearance of DL traffic demand at the corresponding connections.

When an MS receives an UL allocation after receiving a positive MOB_TRF-IND message indication or deactivation indicated by the unsolicited MOB_SLP-RSP message or DL Sleep control extended subheader, the MS shall transmit at least BR message. If there is no data to transmit, BR field of the BR PDU shall be set to 0.

Power saving class is deactivated either by MOB_SLP-REQ/BR and UL sleep control header or MOB_SLP-RSP/DL sleep control extended subheader messages.

The PSC shall be deactivated if traffic triggering wakening flag is set to 1 and if any of the following conditions is met:

— MS receives a MAC PDU over any connection belonging to the Power Saving Class
— MS transmits a bandwidth request with BR set to a value other than 0 on any connection belonging to the Power Saving Class

If the TRF-IND_Required flag was set in MOB_SLP-RSP, Power Saving Class shall be deactivated if MS failed to receive MOB_TRF-IND message during any Availability interval that contains at least one listening window of Power Saving Class of type I.

During Availability intervals, the MS is expected to receive all DL transmissions same way as in the state of normal operations (no sleep).

6.3.20.3 Power saving classes of type II

Power saving class of type II is recommended for connections of UGS, RT-VR type. The following are relevant parameters:

— Initial-sleep window
— Listening window
— Start frame number for first sleep window

Power Saving Class becomes active at the frame specified as “Start frame number for first sleep window.” All sleep windows are of the same size as initial window. Sleep windows are interleaved with listening windows of fixed duration. Power Saving Classes of this type are defined/activated/deactivated by

MOB_SLP-REQ/MOB_SLP-RSP or activated/deactivated by bandwidth request and uplink sleep control header/DL Sleep control extended subheader transaction. The MS may retransmit MOB_SLP-REQ message or Bandwidth request and uplink sleep control header if it does not receive the MOB_SLP-RSP message or DL Sleep control extended subheader within the T43 timer. The BS may send unsolicited MOB_SLP-RSP or DL Sleep control extended subheader to initiate activation of Power Saving Class. Once started, the active state continues until explicit termination by MOB_SLP-REQ/MOB_SLP-RSP messages or Bandwidth request and uplink sleep control header/DL Sleep control extended subheader. BS may send unsolicited MOB_SLP-RSP message or DL Sleep control extended subheader to deactivate Power Saving Class. Alternatively Power Saving Class of type II may be defined and/or activated/deactivated by TLVs transmitted in RNG-REQ and RNG-RSP message. In case of HO, Power Saving Class Parameters TLVs in RNG-REQ/RSP are used only to define Power Saving Class. When an MS or a BS specifies PSCs by using a RNG-REQ/RSP message, it shall include either a Power_Saving_Class_Parameters (see Table 583) or a Unified TLV encoding for Power Saving Class Parameters (see Table 584) for each PSC. When the MS includes the Unified TLV encoding for Power saving Class Parameters for a PSC in the RNG-REQ message, the BS shall include only Unified TLV encoding for Power saving Class Parameters for the PSC in the RNG-RSP message in response to the MS's request. Otherwise, the BS shall include Power_Saving_Class_Parameters for the RNG-RSP message in response to the MS's request.

During listening windows of power saving class type II, the MS may send or receive any MAC SDUs or their fragments at connections comprising the power saving class as well as acknowledgements to them. The MS shall not receive or transmit MAC SDUs during sleep windows.

6.3.20.4 Power saving classes of type III

Power saving class of type III is recommended for multicast connections as well as for management operations, for example, periodic ranging, DSx operations, MOB_ NBR-ADV etc. Power saving classes of this type are defined/activated by MOB_SLP-REQ/MOB_SLP-RSP or BR and UL sleep control header/DL sleep control extended subheader transaction. The MS may retransmit MOB_SLP-REQ message (or BR and UL sleep control header) if it does not receive the MOB_SLP-RSP message (or DL sleep control extended subheader) within the T43 timer. The BS may send unsolicited MOB_SLP-RSP or DL sleep control extended subheader to initiate activation of power saving class. Deactivation of power saving class occurs automatically after expiration of sleep window.

Alternatively, power saving class of type III may be defined/activated by TLV encodings in RNG-RSP message. For periodic ranging Next Periodic Ranging TLV encoding may be used. It activates special power saving classes of type III associated with periodic ranging procedure (as described in 6.3.20.5.1) or keep-alive check (as described in 6.3.20.7.2). In this case the sleep window of the class starts in the next frame after RNG-RSP transmitted and ends in the previous frame, which Next Periodic Ranging TLV encoding (11.1.7.3) indicates.

If Next Periodic Ranging TLV encoding is included in MOB_SLP-RSP, this activates power saving class of type III for periodic ranging and BS can continue to activate the power saving class using Next Periodic Ranging TLV encoding in RNG-RSP message with ranging status set to success.

The following are relevant parameters except in the case that Next Periodic Ranging TLV encoding is used:

— Final-sleep window base
— Final-sleep window exponent
— Start frame number for sleep window

In case Next Periodic Ranging TLV encoding is used, MS shall regard the Start frame number for sleep window as 1 frame and calculate the next frame to wake by using Next Periodic Ranging TLV encoding.

Power saving class becomes active at the frame specified as "Start frame number for first sleep window." Duration of sleep window is specified as base/exponent. After the expiration of the sleep window power saving class automatically becomes inactive.

For multicast service BS may guess when the next portion of data will appear. Then the BS allocates sleep window for all time when it does not expect the multicast traffic to arrive. After expiration of the sleep window multicast data, if already available, may be transmitted to relevant MSs. After that, the BS may decide to reactivate power saving class.

As an example, power saving class of type III may include Basic connection to serve needs of periodic ranging. In this case, duration (base/exponent) of sleep window shall be equal to time interval needed before next Periodic ranging transaction. Then the MS, after the specified time interval, shall be available to DL transmission and BS may either allocate an UL transmission opportunity for RNG-REQ or send unsolicited RNG-RSP. Reactivation of the power saving class may be achieved using, for example, TLVs included into RNG-REQ/RSP.

Alternatively, power saving class of type III may be activated /deactivated by TLVs transmitted in RNG-RSP messages. In case of HO, Power Saving Class Parameters TLVs in RNG-REQ/RSP are used only to define Power Saving Class. When an MS or a BS specifies PSCs by using a RNG-REQ/RSP message, it shall include either a Power_Saving_Class_Parameters TLV (see Table 583) or a Unified TLV encoding for Power Saving Class Parameters (see Table 584) for each PSC. When the MS includes the Unified TLV encoding for Power saving Class Parameters for a PSC in the RNG-REQ message, the BS shall include only Unified TLV encoding for Power saving Class Parameters for the PSC in RNG-RSP message in response to the MS's request. Otherwise, the BS shall include a Power_Saving_Class_Parameters TLV for the in RNG-RSP message in response to the MS's request.

6.3.20.5 Periodic ranging in sleep mode

In case of OFDMA PHY, MS performs CDMA code-based Periodic Ranging according to 6.3.20.5.2.

In case of other PHYs (SC and OFDM), Message-based Periodic ranging is used as described in 6.3.20.5.1.

6.3.20.5.1 Periodic ranging in sleep mode for PHYs (SC and OFDM)

For each MS in sleep mode, during its listening window, BS may allocate an UL transmission opportunity for periodic ranging. Alternatively, BS may return the MS to normal operation by deactivation of at least one power saving class to keep it in active state until assignment of a UL transmission opportunity for periodic ranging, or let the MS know when the periodic ranging opportunity shall occur with Next Periodic Ranging TLV (11.1.7.3) in last successful RNG-RSP.

During periodic ranging or negotiation of sleep mode, after RNG-REQ (or MOB_SLP-REQ) reception, BS shall send RNG-RSP (or MOB_SLP-RSP, respectively) including Next Periodic Ranging TLV so that MS can know when to perform periodic ranging as described in more details in 6.3.23.1. In the frame specified by Next Periodic Ranging TLV, the MS shall decode all consequent UL-MAP messages waiting for a UL unicast transmission opportunity for periodic ranging. When such an opportunity occurs, the MS shall transmit a RNG-REQ message to the BS and then perform the regular procedure for periodic ranging. A successful periodic ranging procedure does not deactivate another Power Save Classes. In the case where periodic ranging procedure fails, the MS shall perform Initial Ranging procedure or handover to another BS.

When the periodic ranging operation between MS and BS successfully processes, the BS may inform the MS of the frame number in which the next periodic ranging operation is expected to start. For that, BS shall append a Next Periodic Ranging TLV encoding to the RNG-RSP message. BS also may inform MS of the existence of DL Traffic addressed to MS. For that, BS shall include the Next Periodic Ranging TLV with a value set to zero. This deactivates all power saving classes at the MS. If an MS receives the RNG-RSP

message with this indication from the BS, then the MS shall immediately resume normal operation with the BS.

The BS may include a SLPID_Update TLV (11.1.7.2) item in a RNG-RSP message for an MS in sleep mode. If the serving BS receives a RNG-REQ message from an MS in sleep mode and there is any need to update SLPID assigned to the MS, the BS shall append a SLPID_Update TLV to the RNG-RSP message only for a RNG-RSP message with ranging status flag set to success. When the received RNG-RSP message with ranging status flag set to Success includes a SLPID_Update TLV, the MS shall decode the TLV and update its SLPID to the new one. The MS shall identify if the SLPID_Update TLV addresses it by searching through the SLPID_Update TLV and determining if the MS's current SLPID matches the Old_SLPID in the SLPID_Update TLV. If they match, then the MS shall set its SLPID to the New_SLPID provided in the SLPID_Update TLV.

6.3.20.5.2 Periodic ranging in sleep mode for OFDMA PHY

Upon expiration of MS Timer T4 shown in Figure 102, MS may perform CDMA-based periodic ranging according to method described in 6.3.10.3.2. CDMA code-based Periodic Ranging can be performed during any interval or MS may skip the periodic ranging depending on vendor implementation. MS may anonymously extend its Availability interval in order to wait the reception of RNG-RSP message with ranging status = Success or find an appropriate ranging opportunity for sending/resending of CDMA code-based ranging request. Such temporary extension of Availability interval is not known by the BS and shall not affect the previously negotiated status of the sleep mode between MS and BS.

6.3.20.6 MDHO/FBSS diversity set maintenance in sleep mode

An MS in sleep mode shall maintain the diversity set and anchor BS if at least one active power saving class has the Maintain Diversity Set and Anchor BSID set to 1 and the MDHO/FBSS duration as specified in the MOB_SLP-RSP message has not expired. Before the MDHO/FBSS duration expires, the MS shall continue to monitor the signal strength of neighbor BS and initiate deactivation of at least one power saving class to keep in normal mode to perform diversity set update procedure (defined in 6.3.21.3.3) or anchor BS update procedure (defined in 6.3.21.3.4).

6.3.20.7 Keep-alive check in sleep mode

In order for BS to maintain supervision of MSs in sleep mode and to perform necessary adjustments, BS may implement a keep-alive check mechanism. There are two methods for Keep-Alive check in sleep mode: Message-based and unsolicitedly grant of UL bandwidth during an availability interval. Those schemes are controlled by BS. If there is Next Periodic Ranging TLV encoding in MOB_SLP-RSP message during sleep mode negotiation, Keep-Alive check operation as described in 6.3.20.7.1 is used. Otherwise, Keep-Alive check operation described in 6.3.20.7.2 can be used.

6.3.20.7.1 OFDMA message-based keep-alive check in sleep mode

For Keep-Alive check for an MS in sleep mode, BS may include Next Periodic Ranging TLV encoding in MOB_SLP-RSP or RNG-RSP message. In this case, BS shall allocate an UL transmission opportunity for RNG-REQ message to an MS in the frame specified by Next Periodic Ranging TLV encoding. And, MS shall transmit a RNG-REQ message on the UL burst allocated by the BS. When BS receives the first RNG-REQ message on UL burst allocated by the BS, BS shall send unconditionally a RNG-RSP with ranging status = Success including Next Periodic Ranging TLV encoding so that MS can know when to perform keep-alive operation in future. But, if the BS wants to perform additional adjustment for the MS, BS may send the RNG-RSP message with ranging status = Continue including Next Periodic Ranging TLV encoding so that the MS can know when to perform keep-alive operation in future. In this case, MS shall remain awake and perform CDMA code-based Periodic Ranging operation (refer to 6.3.10.3.2) until BS sends the

RNG-RSP message with ranging status = Success. MS can enter sleep mode again till the frame indicated by the Next Periodic Ranging TLV encoding, if possible.

In the frame specified by Next Periodic Ranging TLV, when BS allocates a UL transmission opportunity to an MS, BS starts a timer T49 at the same time and wait to receive a first RNG-REQ message from the MS on the UL transmission opportunity. When BS receives the first RNG-REQ message from the MS on the UL burst, BS shall unconditionally terminate T49 timer. If BS does not receive a RNG-REQ message from MS on the UL burst for the MS, it shall continue to allocate a UL unicast burst to the MS as long as the T49 runs. But, if the T49 expires, BS shall regard the MS as being MAC-Initialized. On the other hand, in the frame specified by Next Periodic Ranging TLV, MS shall wake up and try to recognize an allocation of a UL unicast burst allocated by BS. MS shall start a timer T48 at the same time. MS shall reset T48 whenever it receives its own UL burst allocation without RNG-RSP message for the MS. And, MS shall terminate T48 when it receives a RNG-RSP message. MS shall maintain awake so as to receive a RNG-RSP message from BS as long as the T48 runs. If T48 timer expires, MS may perform Network Entry.

When the Keep-Alive check operation between MS and BS successfully processes, the BS shall inform the MS of the frame number in which the next Keep-Alive check operation is expected to start. For that, BS shall append a Next Periodic Ranging TLV encoding to the RNG-RSP message. If MS receives a RNG-RSP message with ranging status = Success including Next Periodic Ranging TLV encoding, MS shall recognize the frame to wake up for next Keep-Alive check. If MS receives a RNG-RSP message with ranging status = Continue including Next Periodic Ranging TLV encoding, MS shall perform CDMA code-based Periodic Ranging together with saving of the frame to wake up for next Keep-Alive check. BS may send RNG-RSP message with Ranging Status = Abort, In this case, BS regards the MS as being MAC-Initialized and MS shall perform Network Entry to a BS.

At the time of successful Keep-Alive check, BS may inform MS of the existence of DL Traffic addressed to MS. For that, BS shall include the Next Periodic Ranging TLV with a value set to zero. This deactivates all Power Saving Classes at the MS. If an MS receives the RNG-RSP message with this indication from the BS, then the MS shall immediately resume Normal Operation with the BS. The BS may also include a SLPID_Update TLV item in a RNG-RSP message for an MS in sleep mode. If BS receives a RNG-REQ message from an MS and there is any need to update SLPID assigned to the MS, the BS shall append a SLPID_Update TLV to the RNG-RSP message. When MS receives RNG-RSP message with a SLPID_Update TLV, the MS shall decode the TLV and update its SLPID to the new one. The MS shall identify if the SLPID_Update TLV addresses it by searching through the SLPID_Update TLV and determining if the MS's current SLPID matches the Old_SLPID in the SLPID_Update TLV. If they match, then the MS shall set its SLPID to the New_SLPID provided in the SLPID_Update TLV.

6.3.20.7.2 OFDMA keep alive check by UL data grants in sleep mode

BS may implement keep-alive signaling by unsolicited allocating UL data grants during an Availability interval. The MS shall respond to such a data grant sending any data whereas it is clarified that an UL message with BR=0 shall not affect the status of current sleep mode according to 6.3.20.2.

BS may also during an availability interval transmit an unsolicited RNG-RSP messages with frequency, timing or power offsets, whereas MS shall use these new offsets during next time of transmitting, determined by next UL-grant. New assigned power offset shall also be used in case MS decides to wake up and perform CDMA based ranging or bandwidth request due to data in buffers.

6.3.20.8 Sleep mode supporting co-located coexistence

The MS may include the Co-located-Coexistence-Enabled TLV in the MOB_SLP-REQ to define or define and activate a PSC for co-located coexistence support. The MS may include the Co-located-Coexistence-Enabled TLV in the MOB_SLP-REQ only if PSC-based co-located coexistence mode 1 or mode 2 was negotiated during registration (see 11.7.8.9).

Only one PSC shall be active at any given time per MS when sleep mode is used to support co-located coexistence. The active PSC supporting co-located coexistence shall be defined with Traffic_triggered_wakening_flag set to 0 and the TRF-IND_Required flag set to 0.

In case a PSC supports co-located coexistence mode 1 or mode 2, the BS shall not deactivate the PSC. Furthermore, the BS is required to honor the configuration for the PSC in the MS MOB_SLP-REQ message meaning the BS does not gratuitously reject or modify the configuration for the PSC in the MS MOB_SLP-REQ as multi-radio operation in the MS will suffer due to co-located radio interference. The BS shall not provide any MS DL/UL allocation in the sleep window of the PSC supporting co-located coexistence. The MS may request deactivation of the active PSC supporting co-located coexistence or switch to a PSC without co-located coexistence support in case co-located coexistence support is no longer needed.

If the PSC supporting co-located coexistence in mode 2 (bit 1 of Co-located-Coexistence-Enabled TLV is set to 1), the BS shall not provide any MS UL allocation in the first frame of the PSC listening interval and should provide any DL allocation in the first frame of the PSC listening interval. Furthermore, the BS should populate the DL subframe the way that DL allocations for all MS with active Co-located-Coexistence-Enabled PSCs precede in time the allocations for other MS. Activation/deactivation of the PSC supporting co-located coexistence mode 2 may be triggered by the MS depending on DL channel quality estimation and/or interference from co-located and coexisting radios.

The MS may request the BS to allocate UL band AMC subchannels to reduce co-located radio interference by setting bit 3 to 1 in the Co-located-Coexistence-Enabled TLV. The BS should allocate the subchannels as much as possible to the uppermost (if bit 4 is set to 1) or lowermost side (if bit 4 is set to 0) of the available channel bandwidth in order to increase the frequency separation between the interfering radio channels of the MS.

6.3.20.9 MAP relevance for Sleep Mode

When the MAP relevance for sleep mode feature has been negotiated (bit 2 of Co-located-Coexistence-Enabled TLV is set to 1 and/or bit 0 in the sleep mode functions enabled in H-FDD TLV is set to 1), the BS should schedule the listening and sleep intervals for this MS following the MAP relevance based on MS's request using MOB_SLP-REQ:

— MAP relevance bit = 1 defines that the listening and sleep intervals follow the MAP relevance (e.g., for OFDMA, when the DL-MAP is relevant to the DL subframe of current frame and the UL-MAP is relevant to the UL subframe of the following frame, the UL subframe of each listening and sleep interval is shifted to a next frame compared to the DL subframe of that interval).
— MAP relevance bit = 0 defines that the listening and sleep intervals are aligned on the same frame number for the UL and the DL subframes.

As an example, Figure 143 illustrates the co-located coexistence PSC for dual frame cycle sleep mode usage (i.e., the listening interval and sleep interval lengths are each 1 frame) starting at frame $n + 1$ in a TDD case (MAP relevance bit 2 of Colocated-Coexistence-Enabled TLV is set to 1 and the sleep mode functions enabled in H-FDD TLV is absent or bit 0 in this TLV is set to 0).

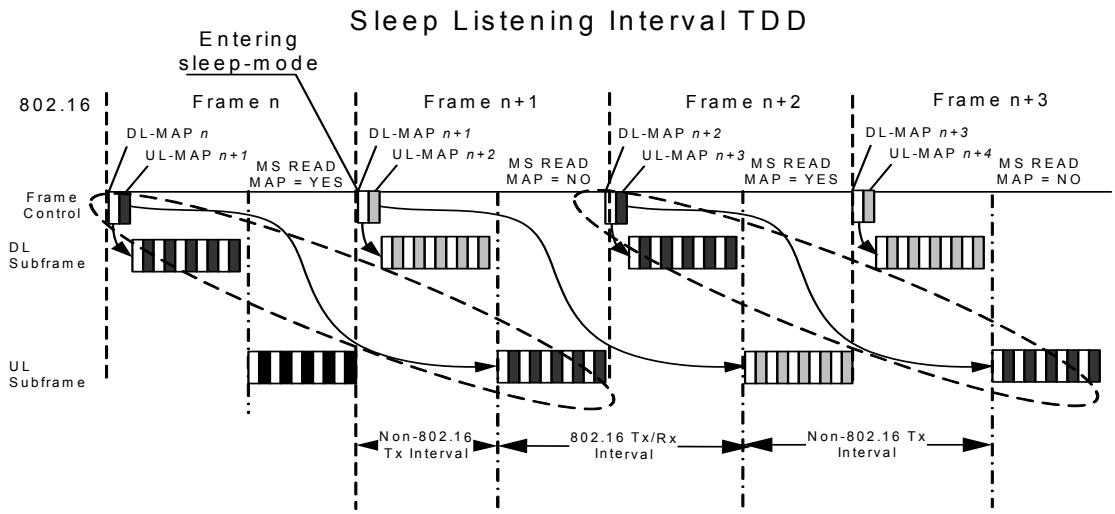

Figure 143—Co-located coexistence PSC for dual frame cycle sleep mode usage

6.3.21 MAC HO procedures

This subclause contains the procedures performed during HO.

An MS shall be capable of performing HO using the procedures defined in 6.3.21.2.

The HO process defined in this subclause may be used in a number of situations. Some examples are as follows:

— When the MS moves and (due to signal fading, interference levels, etc.) needs to change the BS to which it is connected in order to provide a higher signal quality.
— When the MS can be serviced with higher QoS at another BS.

The HO decision algorithm is beyond the scope of the standard.

6.3.21.1 Network topology acquisition

6.3.21.1.1 Network topology advertisement

A BS shall broadcast information about the network topology using the MOB_NBR-ADV message. The message provides channel information for neighboring BSs normally provided by each BS's own DCD/UCD message transmissions. A BS may obtain that information over the backbone network. Availability of this information facilitates MS synchronization with neighboring BS by removing the need to monitor transmission from the neighboring BS for DCD/UCD broadcasts.

The MS shall support at least $N_{MS\_max\_neighbors}$ total neighbors in a single or fragmented MOB_NBR-ADV message. If the MOB_NBR-ADV contains more neighbors than the MS can support, the MS shall retain neighbors that are defined first in the MOB_NBR-ADV and discard subsequent neighbors. For example, if the MS supports a maximum of $N_{MS\_max\_neighbors}$ neighbors but the BS sends a MOB_NBR-ADV with $N_{MS\_max\_neighbors} + K$ neighbors, the MS should keep the first $N_{MS\_max\_neighbors}$ neighbors (with index $0 \leq j < N_{MS\_max\_neighbors} - 1$) and discard later neighbors (with index $j \geq N_{MS\_max\_neighbors}$).

When the MOB_NBR-ADV message is fragmented, the MS should not send MOB_MSHO-REQ or MOB_SCN-REP using the neighbor BS index until all prior fragments are received.

6.3.21.1.2 MS scanning of neighbor BSs

A BS may allocate time intervals to MS for the purpose of MS seeking and monitoring suitability of neighbor BSs as targets for HO. The time during which the MS scans for available BS will be referred to as a scanning interval.

An MS may request an allocation of a group of scanning intervals with interleaving intervals of normal operation and recommended start frame of first scanning interval (by including recommended start frame) using the MOB_SCN-REQ message for the purpose of reducing the number of MOB_SCN-REQ and MOB_SCN-RSP messages required to create multiple scanning opportunities when frequent scanning is required. The MS indicates in this message the estimated duration of time it requires for the scan.

The BS may comply with the recommended start frame and set “start frame” in MOB_SCN-RSP message as recommended by MS (First frame of first scanning interval). The BS may set start frame to the first frame of the second scanning interval. The BS may set start frame to any other value, disregarding MS recommendation.

Scanning interval repeats with the number of Scan iteration. An interleaving interval is interleaved between two consecutive scanning intervals.

If an MS is performing Autonomous scanning while the trigger condition is met, then the MS shall continue to perform Autonomous scan. In the MOB_SCN-REQ message the MS (the MOB_SCN-RSP message the BS) shall indicate group of neighbor BSs for which only Scanning or Scanning with Association are requested by MS (recommended by BS). Presence of those BSs for which Association is requested (recommended) is indicated by encoding of Scanning type ≥ 0b001. The BS may negotiate over the backbone with a BS Recommended for Association allocation unicast ranging opportunities. Then the MS will be informed on Rendezvous time to conduct Association ranging with the Recommended BS. When conducting initial ranging to a BS recommended for Association, MS shall use allocated unicast ranging opportunity, if available. Regardless of the presence of recommended BSIDs, MS may determine and perform any scanning or Association activities during scanning interval at its own discretion. When the report mode is 0b10 in the MOB_SCN-RSP message, the MS shall scan all BSs within the Recommended BS list of the message and then report the scanning result with the MOB_SCN-REP message as conditioned by specified trigger event. Particularly if the Trigger Function in the most recently-received DCD channel encoding is 0x5 or 0x6, the MS shall include within the MOB_SCN-REP all recommended BSs for which the MS holds a valid and updated metric measure. Otherwise, the MS shall add only the BSs that met the Trigger Function conditions within the MOB_SCN-REP message. The scanning duration performed by the MS on all neighbor BSs shall be no longer than the parameter Max_Dir_Scan_Time (as specified in 10.1) to limit the time before a report is sent to the BS.

Upon reception of the MOB_SCN-REQ message, the BS shall respond with a MOB_SCN-RSP message. The MS may retransmit the MOB_SCN-REQ message if it does not receive the MOB-SCN-RSP message within the T44 timer. The MOB_SCN-RSP message shall either grant the requesting MS a scanning interval that is at least as long as requested by that MS, or deny the request. A value of zero for Scan duration in MOB_SCN-RSP shall indicate the request for an allocation of scanning interval is denied. The serving BS may also send MOB_SCN-RSP message unsolicited. For unsolicited MOB_SCN-RSP message transmitted without assignment of scanning interval, a value of zero for Scan duration is used to trigger MS to report scanning result, without explicitly assigning scanning intervals to the MS. In this case, the MS shall only update Report Mode, Report Period and Report Metric based on the information received in MOB_SCN-RSP message.

When the Report Mode is 0b11, the MS should report its actual scanning results for neighbors that were scanned due to a previous MOB_SCN-RSP message as well as due to previous autonomous scanning.

In the event of a race condition where, after the BS sends an unsolicited MOB_SCN-RSP message, the MS sends a MOB_SCN-REQ message before it receives the BSs MOB_SCN-RSP message, the BS shall respond to the MOB_SCN-REQ message with another unsolicited MOB-SCN-RSP message (in the interleaving interval of the previous MOB_SCN-RSP message) that shall overwrite the previous one.

When multiple MOB_SCN-RSP (solicited or unsolicited) messages are received by the MS (over time) and if the MS responds to any of the messages, then the MS shall always respond to the most recent message.

Following reception of a MOB_SCN-RSP message granting the request, beginning at Start frame an MS may scan for one or more BS during the time interval allocated in the message. When a BS is identified through scanning, the MS may attempt to synchronize with its DL transmissions, and estimate the quality of the PHY channel.

The serving BS may buffer incoming data addressed to the MS during the scanning interval and transmit that data after the scanning interval during any interleaving interval or after exit of the scanning mode.

An MS may terminate scanning and return to Normal Operation anytime that may be indicated to the BS by sending a MAC PDU (for example, Bandwidth request) during any scanning interval. If a serving BS receives a MAC PDU message during any scanning interval from an MS that is supposed to be in Scanning Mode, the BS shall assume that the MS is no longer in Scanning Mode. The group of intervals is terminated at any time if the MS sends MOB_SCN-REQ message with Scan Duration set to zero or serving BS sends MOB_SCN-RSP message with Scan Duration set to zero during any interleaving interval. Upon reception of the MOB_SCN-REQ message with zero Scan Duration, the BS shall respond with a MOB_SCN-RSP message with Scan Duration set to zero and Report Mode set to 0b00 (No report). If HO negotiation is started at the time of an ongoing scanning process, the group of scanning intervals shall be terminated when the MS transmits MOB_MSHO-REQ for MS-initiated HO and when the BS transmits MOB_BSHO-REQ for BS-initiated HO. The MS may renegotiate scanning intervals with the Serving BS upon transmission of HO-IND with HO_IND_type = 0b01 or HO_IND_type = 0b10.

6.3.21.1.3 Association procedure

Association is an optional initial ranging procedure occurring during scanning interval with respect to one of the neighbor BSs. The function of Association is to enable the MS to acquire and record ranging parameters and service availability information for the purpose of proper selection of HO target and/or expediting a potential future HO to a target BS. Recorded ranging parameters of an Associated BS may be further used for setting initial ranging values in future ranging events during actual HO.

There are three levels of association as follows:

— Association Level 0: Scan / Association without coordination
— Association Level 1: Association with coordination
— Association Level 2: Network assisted association reporting

Upon completion of a successful MS initial ranging of a BS, if the RNG-RSP message contains a Service Level Prediction parameter set to 2, the MS may mark the BS as Associated in its MS local Association table of identities, recording elements of the RNG-RSP to the MS local Association table, and setting an appropriate aging timer (see Table 554). Association state in the MS local Association table shall be aged-out after ASC-AGING-TIMER timeout and the Association entry removed.

The BS may direct the MS to associate with recommended BSs by setting scanning type to 0b010 or 0b011 in MOB_SCN-RSP. If the MS supports directed association, it shall perform association as directed by the

serving BS. If MS does not support directed association, it may ignore this message. The support of directed association shall be negotiated as part of SBC-REQ and SBC-RSP MAC management message dialog.

6.3.21.1.3.1 Association level 0—Scan/Association without coordination

When this association level is chosen by the network, the serving BS and the MS negotiate about the association duration and intervals (via MOB_SCN-REQ with scanning type = 0b001 and MOB_SCN-RSP). The serving BS allocates periodic intervals where the MS may range neighboring BSs; however, the target BS has no knowledge of the MS and provides only contention-based ranging allocations. An MS chooses randomly a ranging code from the initial ranging domain of the target BS and transmits it in the contention-based ranging interval of the target BS.

After the BS successfully receives ranging code and sends RNG-RSP message with ranging status Success, it will provide UL allocation of adequate size for the MS to transmit RNG-REQ message with TLV parameters (serving BSID, MS MAC address) related to the association ranging.

6.3.21.1.3.2 Association level 1—Association with coordination

When this association level is chosen, the serving BS provides association parameters to the MS and coordinates association between the MS and neighboring BSs.

The MS may request to perform association with coordination by sending the MOB_SCN-REQ message to the serving BS with scanning type = 0b010. This message will include a list of neighboring BSs with which the MS wishes to perform association. The serving BS may also arrange for this type of association unilaterally by sending unsolicited MOB_SCN-RSP.

The serving BS will then coordinate the association procedure with the requested neighboring BSs.

Each neighboring BS will provide a ranging region for association at a predefined “rendezvous time,” in terms of relative frame number. The neighboring BS will also assign the following:

— A unique code number (from within the initial ranging codeset)
— A transmission opportunity within the allocated region (in terms of offset from the start of the region)

The neighboring BS may assign the same code or transmission opportunity to more than one MS, but not both. In case all allocated transmission opportunities in current region are different, there is no potential for collision of transmissions from different MSs. In case the serving BS allocates the same transmission opportunity to several MSs, there is some probability of collision and then neighbor BS may fail to identify transmitted codes.

The serving BS (of the associating MS), will coordinate to assure that the neighboring BSs do not assign overlapping or too close in time to each other ranging regions.

The serving BS will provide the preassigned association ranging info via the MOB_SCN-RSP message.

When the Dedicated ranging indicator is set to 1, the ranging region will be allocated via UIUC = 12 in the UL-MAP.

When “Dedicated ranging indicator” is set to 1, then the ranging region and ranging method defined could be used for the purpose of ranging using dedicated CDMA code and Tx opportunity assigned in the MOB_PAG-ADV message (for location update in idle mode) or in the MOB_SCN-RSP message (for coordinated association).

MSs registered to this BS are prohibited from use of the named ranging region.

Upon receiving the MOB_SCN-RSP message, the MS should interpret the provided "rendezvous time," dedicated code, and transmission opportunity as follows:

— "Rendezvous time" specifies the frame in which the neighbor BS will transmit a UL-MAP containing the definition of the dedicated ranging region where the MS can use the assigned CDMA ranging code. "Rendezvous time" is provided in units of frames, beginning at the frame where the MOB_SCN-RSP message is transmitted.
— The MS shall synchronize to the neighbor BS at the first frame immediately following the rendezvous time, read the UL-MAP transmitted at this frame, and extract the description of the dedicated ranging region (ranging region with "Dedicated ranging indicator" bit set to 1). The MS shall determine the specific region it should use for transmission of the dedicated CDMA code by applying the offset defined by the Transmission Opportunity Offset field in MOB_SCN-RSP, which was received from the serving BS, to the dedicated ranging region definition in the UL-MAP of the neighbor BS. In case the neighbor BS decides to provide a regular (nondedicated) ranging region with Dedicated ranging indicator set to 0, the MS may transmit the allocated CDMA code in the regular ranging region.
— If the MS could not obtain UL_MAP at the first frame immediately following the rendezvous time, it shall abort the Level 1 association process it is attempting with the current BS. The MS may perform the Level 0 association with this BS as defined in 6.3.21.1.3.1 after it aborts the Level 1 association process.

6.3.21.1.3.3 Association level 2—Network-assisted association reporting

The MS may request to perform association with network assisted association reporting by sending the MOB_SCN-REQ message to the serving BS with scanning type = 0b011. This message will include a list of neighboring BSs with which the MS wishes to perform association. The serving BS may also request this type of association unilaterally by sending the MOB_SCN-RSP message.

The serving BS will then coordinate the association procedure with the requested neighboring BSs in a fashion similar to association Level 1. However, when using this association type, the MS is required only to transmit the CDMA ranging code at the neighbor BS. Then the MS does not have to wait for RNG-RSP from the neighbor BS. Instead, the RNG-RSP information on PHY offsets will be sent by each neighbor BS to the serving BS (over the backbone network). The serving BS may aggregate all ranging related information into a single MOB_ASC_REPORT message.

When receiving this message, the MS updates its association database (PHY offsets and CIDs) and timers for each associated BS.

If no ranging region exists with Dedicated Ranging Indicator set to 1 but a regular (nondedicated) ranging region is allocated by the BS at the rendezvous time, then MS may use this allocation for the coordination process. In this case, the MS may transmit the allocated CDMA code in the region defined via UL-MAP IE with UIUC = 12 (i.e., the regular ranging region). The MS shall also in this case ignore the value of the Transmission Opportunity Offset field of the MOB_SCN-RSP message it received from the serving BS during the association negotiation. The neighbor BS that decides to provide a regular (nondedicated) ranging region instead of a ranging region with Dedicated ranging indicator set to 1, should expect to receive the allocated CDMA code in the regular (nondedicated) ranging region. If the MS could not obtain UL_MAP at the first frame immediately following the rendezvous time, it shall abort the Level 2 association process its attempting with the current BS. The MS may perform the Level 0 association with this BS as defined in 6.3.21.1.3.1 after it aborts the Level 2 association process.

6.3.21.2 HO process

The subclause defines the HO process in which an MS migrates from the air-interface provided by one BS to the air-interface provided by another BS. The HO process consists of the following stages:

— Cell reselection—MS may use neighbor BS information acquired from a decoded MOB_NBR-ADV message or may make a request to schedule scanning intervals or sleep intervals to scan, and possibly range, neighbor BSs for the purpose of evaluating MS interest in HO to a potential target BS. The cell reselection process need not occur in conjunction with any specific, contemplated HO decision.

— HO Decision and Initiation—An HO begins with a decision for an MS to HO from a serving BS to a target BS. The decision may originate either at the MS or the serving BS. The HO Decision consummates with a notification of MS intent to HO through MOB_MSHO-REQ or MOB_BSHO-REQ message.

— Synchronization to target BS DL—The MS shall synchronize to the DL transmissions of the Target BS and obtain DL and UL transmission parameters. If the MS had previously received a MOB_NBR-ADV message including Target BSID, Physical Frequency, DCD and UCD, this process may be shortened. If the Target BS had previously received HO notification from the Serving BS over the backbone, then the Target BS may allocate one or more non-contention-based initial ranging opportunities.

— Ranging—MS and target BS shall conduct initial ranging per 6.3.9.5 or HO ranging per 6.3.10.4. If MS RNG-REQ includes serving BSID, then target BS may make a request to serving BS for information on the MS over the backbone network and serving BS may respond. Regardless of having received MS information from serving BS, target BS may request MS information from the backbone network. Network reentry proceeds per 6.3.9 except as may be shortened by target BS possession of MS information obtained from serving BS over the backbone network. This type of HO is considered optimized HO. MS information (or MS context) may include static context and dynamic context, where static context consists of all configuration parameters that were acquired during initial NW entry or later, via exchange of information between the BS and MS (for example, all SBC-RSP and REG-RSP parameters, all service flow encodings from DSx message exchanges, etc.) and dynamic context consists of all counters, timers, state machine status, data buffer contents (e.g., ARQ window). Transaction states, which may impact configuration parameters, are considered dynamic context until complete, which by then is considered static context.

NOTE—Security context is always considered static context.

Depending on the amount of that information target BS may decide to skip one or several of the following Network Entry steps:

— Negotiate basic capabilities (Bit 0 in HO Process Optimization TLV in RNG-RSP is set)
— PKM Authentication phase (Bit 1 in HO Process Optimization TLV is set)
— TEK establishment phase (Bit 2 in HO Process Optimization TLV is set)
— REG-REQ message phase (Bit 9 in HO Process Optimization TLV is set)
— Unsolicited REG-RSP message phase (Bit 10 in HO Process Optimization TLV is set)

In case Bit 6 in HO Process Optimization TLV is set, full service and operational state transfer or sharing between serving BS and target BS is assumed (ARQ state, all timers, counters, MAC state machines, CIDs, service flows information and other connection information), so BS and MS do not exchange network reentry messages after ranging before resuming normal operations.

A full list of optimization capabilities is provided in definition of HO Process Optimization TLV (Table 585). When this TLV is included in RNG-RSP sent to an MS performing network re-entry from idle mode, Bit 6 does not refer to any ARQ state (blocks in ARQ window and associated timers). It refers only to SFIDs and related settings (QoS descriptors and CS classifier information) for all Service Flows that the MS had established when it entered idle mode as well as any SAs and their related keying material.

In case network reentry includes Key Request/Reply handshake, the BS shall provide sufficient time to the MS to process received TEK information before moving to next step as specified by HO TEK processing time TLV.

If TLVs for reestablishment of connections (11.7.9) appear in the REG-RSP message or in the REG-RSP encodings TLV in the RNG-RSP message, DSA-REQ/RSP procedure shall not be used for this purpose. In this case, re-establishment of connections starts immediately after REG-RSP (message or TLV in RNG-RSP message); the BS shall provide sufficient time to the MS to process connections information as specified by MS HO connections parameters processing time TLV.

In case Key Request/Key Reply handshake is not omitted, BS shall send REG-RSP, solicited or not. If REG-RSP is not omitted, network reentry process completes with REG-RSP message.

— Termination of MS Context—The final step in HO. Termination of MS Context is defined as serving BS termination of context of all connections belonging to the MS and the context associated with them (i.e., information in queues, ARQ state machine, counters, timers, header suppression information, etc., is discarded).

— HO Cancellation—An MS may cancel HO via MOB_HO-IND message at any time prior to expiration of Resource_Retain_Time interval after transmission of MOB_MSHO-REQ (in case of MS initiated HO) or MOB_BSHO-REQ (in case of BS initiated HO).

The HO process, and its similarity to the initial network entry process, is depicted in Figure 144.

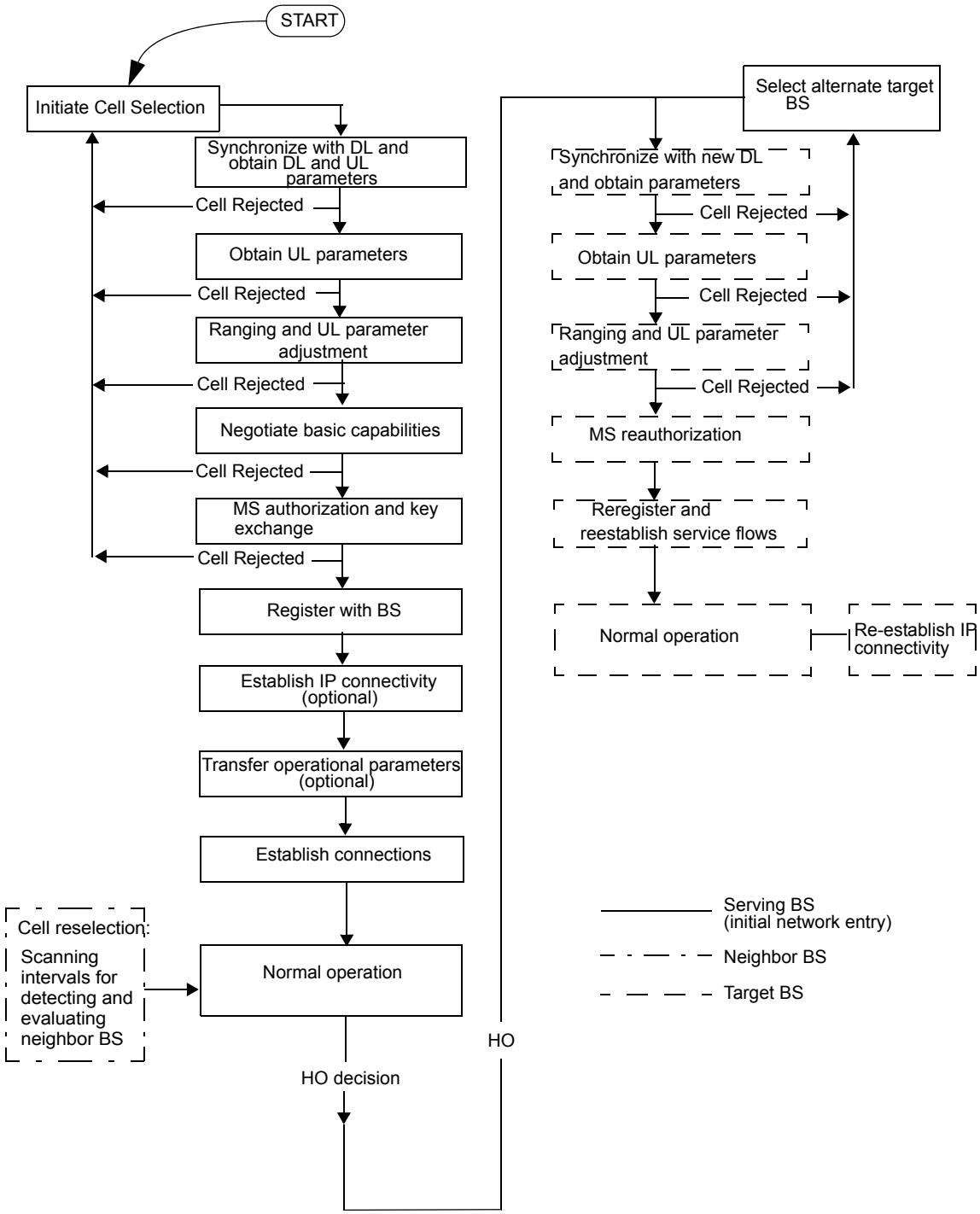

Figure 144—HO and initial network entry

6.3.21.2.1 Cell reselection

Cell reselection refers to the process of an MS Scanning and/or Association with one or more BS in order to determine their suitability, along with other performance considerations as an HO target. The MS may

incorporate information acquired from a MOB_NBR-ADV message to give insight into available neighbor BSs for cell reselection consideration. The serving BS may schedule scanning intervals or sleep intervals to conduct cell reselection activity. Such a procedure does not involve termination of existing connection to a serving BS. (See Figure 145.)

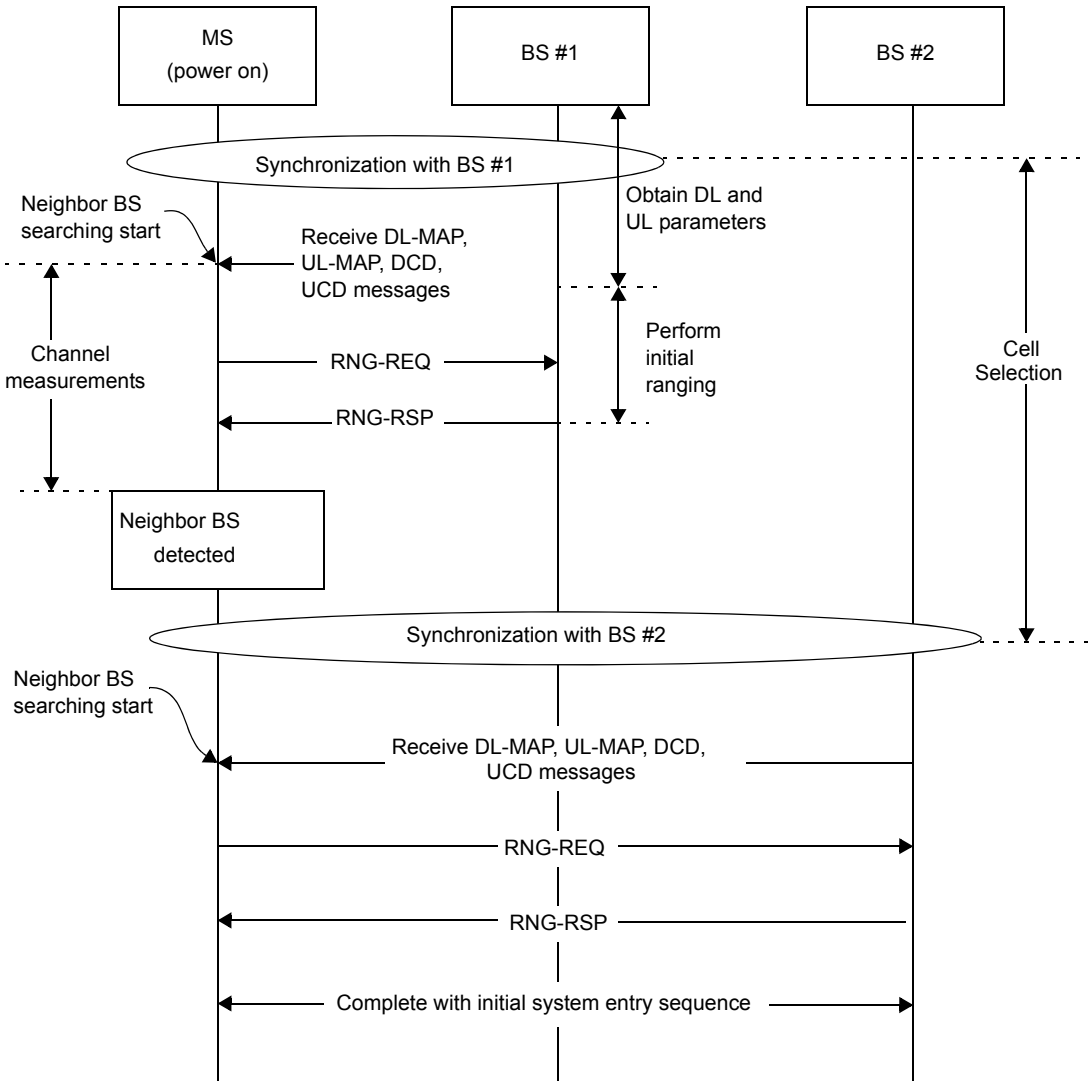

Figure 145—Example of cell selection with ranging

6.3.21.2.2 HO decision and initiation

An HO begins with a decision for an MS to HO from a serving BS to a target BS. The decision may originate either at the MS, the serving BS, or on the network. The HO may proceed with a notification through either MOB_MSHO-REQ or MOB_BSHO-REQ messages.

If the BS_Controlled_HO flag is set to 0 in the HO type support field of DCD message, the HO notification is recommended, but not required.

If the BS_Controlled_HO flag is set to 1, the HO notification is mandatory unless a drop has been detected by MS as specified in 6.3.21.2.6. The MS shall send MOB_MSHO-REQ only if a triggering condition specified in Trigger TLV or Neighbor BS Trigger TLV has occurred.

Acknowledgement of MOB_MSHO-REQ with MOB_BSHO-RSP is required. After MS transmits MOB_MSHO-REQ, MS shall not transmit any MOB_MSHO-REQ prior to expiration of timer MS_handover_retransmission_timer. MS shall deactivate timer MS HO retransmission timer on MS transmission of MOB_HO-IND or MS receipt of MOB_BSHO-RSP.

If an MS that transmitted a MOB_MSHO-REQ message detects an incoming MOB_BSHO-REQ message before the MS_handover_retransmission_timer (see 11.7.12.3) expires, it shall ignore that MOB_BSHO-REQ message. A BS that transmitted a MOB_BSHO-REQ message and detects an incoming MOB_MSHO-REQ message from the same MS shall ignore its MOB_BSHO-REQ. A BS that transmitted a MOB_BSHO-REQ message and detects an incoming MOB_HO-IND message from the same MS shall ignore its own previous request. While a handover is in progress, an MS that has transmitted a MOB_HO-IND message and detects an incoming MOB_BSHO-REQ message from the Serving BS shall ignore that MOB_BSHO-REQ.

When MOB_MSHO-REQ is sent by an MS, the MS may indicate one or more possible target BS. When MOB_BSHO-REQ is sent by a BS, the BS may indicate one or more possible target BSs. The MS may evaluate possible target BS(s) through previously performed scanning and Association activity.

If the Serving BS sends a MOB_BSHO-REQ message to the MS without including a target BSID for handover in the message, the MS should do one of the following:

— Send a MOB_HO-IND message with HO_IND_type set to 0b10 and its preferred target BS included in the message,
— Send a MOB_MSHO-REQ message with its preferred target BS included in the message,
— Send a MOB_HO-IND message with HO_IND_type set to 0b00 and its preferred target BS included in the message,
— Send a MOB_HO-IND message with HO_IND_type set to 0b01 to cancel the handover, or
— Send a MOB_HO-IND message with HO_IND_type set to 0b10 without including its preferred target BS in the message.

Serving BS criteria for recommendation of target BS may include factors such as expected MS performance at potential target BS, BS and network loading conditions, and MS QoS requirements. The serving BS may obtain expected MS performance, BS and network loading conditions at a potential target BS and Basic CID to be used at a potential target BS through the exchange of messages with that BS over the backbone network. The serving BS may negotiate location of common time interval where dedicated initial ranging transmission opportunity for the MS will be provided by all potential target BSs. This information may be included into MOB_BSHO-RSP message, and is indicated by Action Time. The Pre-allocated Basic CID shall be included in the MOB_BSHO-REQ/RSP if the recommended target BS supports Seamless HO mode.

If the Basic CID is pre-allocated at the serving BS, the MS should update its primary management CID and transport CIDs autonomously at the target BS without using CID_update or Compressed CID_update encodings. An MS can derive the new CIDs at a target BS from the Pre-allocated Basic CID by using the Connection identifier descriptor TLV in DCD message. The new primary management CID should be derived by adding 'm' to the Pre-allocated Basic CID.

There are two modes for deriving new transport CIDs at a target BS. If autonomous derivation mode is set, the new transport CIDs are derived with 'm' and 'a' parameters broadcasted in the DCD message. The recommended BS reserves contiguous number ('a') of transport CIDs for each MS. An MS can derive the first transport CID by using the equation $\{(2m+1) + (\text{Basic CID}-1) \times a\}$ and it autonomously updates its transport CIDs in ascending order from the first transport CID.

If the number of transport connections of an MS is greater than '*a*', the block allocation mode should be used. If the block allocation mode is set in MOB_BSHO-REQ/RSP, the first CID at the head of the block shall be included in MOB_BSHO-REQ/RSP. The MS should update all the transport CIDs from the first CID followed by continuous CIDs in the block. A BS may allocate multiple blocks in the MOB_BSHO-REQ/RSP. When the BS allocates multiple blocks, it shall include the first Transport CID and number of Transport CIDs in MOB_BSHO-REQ/RSP for each block.

Dedicated allocation for transmission of RNG-REQ means that channel parameters learned by the MS autonomously, based on information acquired at the time of HO with the target BS or during Association of that BS are considered valid during sufficient time and can be reused for actual network reentry without preceding CDMA ranging. Information such as indicators of link quality in the UL direction learned by the MS during Association may be provided to the serving BS over the backbone.

If Network Assisted HO supported flag is set to "1" in MOB_BSHO-REQ message, MS may perform an HO to any BS among the recommended BSs in MOB_BSHO-REQ without notifying the serving BS of a selected target BS. As an acknowledgement to the MOB_BSHO-REQ message, the MS may send a MOB_HO-IND message with its target BSID set to "0x00000000".

When the serving BS, transmitted MOB_BSHO-REQ with Network Assisted HO supported flag = 1, receive MOB_HO-IND with target BSID = 0x00000000, it may neglect target BSID included in MOB_HO-IND message.

If the BS_Controlled_HO flag is set to 0 in the HO type support field of the DCD message, MS HO to one of BSs specified in MOB_BSHO-RSP is recommended, but not required. The MS may attempt HO to a different BS that may or may not have been included in MOB_BSHO-RSP.

If the BS_Controlled_HO flag is set to 1, MS handover to one of BSs specified in MOB_BSHO-REQ/RSP is required. An MS may attempt handover to the BS not included in MOB_BSHO-REQ/RSP by sending a MOB_HO-IND indicating the selected BS only if a trigger condition specified in a Trigger TLV or Neighbor BS Trigger TLV has occurred for a target BS not listed in the MOB_BSHO-REQ/RSP.

The MS may respond with MOB_HO-IND with HO_IND_type = 0b10 indicating HO reject if the MS is unable to handover to any of the recommended BSs in the MOB_BSHO-REQ or MOB_BSHO-RSP. If the MS signals rejection of the serving BS instruction to HO through HO_IND_type field in the MOB_HO-IND set value of 0b10 (HO reject), the BS may reconfigure the neighbor BS list and retransmit MOB_BSHO-RSP message including a new neighbor BS list.

An MS may signal rejection of the target BS offered for handover by the serving BS in one of two manners. The MS may send a MOB_HO_IND message with HO_IND_type set to 0b00 (Serving BS release) and include its preferred TBS in the message. In this case the MS doesn't set the T42 timer and the MS departs for the TBS without further negotiation with the SBS. An MS may also signal rejection of the target BS offered by the serving BS by sending MOB_HO_IND message with HO_IND_type set to 0b10 (Handover Reject) and setting the T42 timer. The MS may include its preferred TBS in the message. In this case the MS waits for the SBS to respond with a new MOB_BSHO-RSP or MOB_BSHO-REQ message. If the new TBS is acceptable to the MS, it responds with MOB_HO_IND message with HO_IND_type set to 0b00 (Serving BS Release) and includes the TBS selected from the neighbor list in the message.

In some instances, the BS may need to force the MS to conduct HO. The BS shall include a value of HO operation mode = 1 in either the MOB_BSHO-REQ or MOB_BSHO-RSP to signal to the MS that the MS shall conduct HO. Upon receiving a message with HO operation mode = 1, the MS should treat the HO request as required and shall respond with an HO-IND. MS should send HO-IND with option HO_IND_type = 0b00 indicating commitment to HO unless MS is unable to HO to any of the recommended BSs in the message, in which case MS may respond with HO-IND with option HO_IND_type = 0b10 indicating HO reject and may include the MS preferred target BS for handover. If the BS_Controlled_HO

flag is set to 0 in the HO type support field of the DCD message, an MS required to conduct HO is not restricted to conducting HO to those BS included in the notifying message. In other words, the MS may attempt HO to a different BS that may or may not have been included in either the MOB_BSHO-REQ or MOB_BSHO-RSP. If the BS_Controlled_HO flag is set to 1 in the HO type support field of the DCD message, an MS required to conduct handover is restricted to conducting handover to those BS included in the notifying message. Only in case a triggering condition specified in Trigger TLV or Neighbor BS Trigger TLV has occurred for a target BS not listed in MOB_BSHO-REQ or in the MOB_BSHO-RSP, the MS may attempt handover to the BS by sending a MOB_HO-IND indicating the selected BS. The MS may respond with HO-IND with HO_IND_type = 0b10 indicating HO reject if the MS is unable to handover to any of the recommended BSs in the MOB_BSHO-REQ or MOB_BSHO-RSP.

The serving BS may notify one or more potential target BS over the backbone network of MS intent to HO. The serving BS may also send MS information to potential target BS over the backbone network to expedite HO.

In order to verify the MS can complete the HO preparation phase in time to receive the Fast_Ranging_IE in the target base station (i.e., after action time), the serving BS may grant an unsolicited UL allocation for transmission of MOB_HO-IND message. In this case, the Unsolicited UL Grant for HO-IND flag in MOB_BSHO-REQ/RSP message serving BS should be set to 1. Upon expiration of Handover Indication Readiness Timer, the serving BS should grant an UL allocation to the MS with a size enough for transmission of MOB_HO-IND message.

The serving BS may continue to issue DL and UL allocations to the MS until expiration of Handover Indication Readiness Timer or until MOB_HO-IND with HO_IND_type=0b00 was received or until it received an indication from the target BS (over the backbone network) that MS successfully completed its HO attempt or until it decides that the MS is no longer available.

The MS that sent MOB_HO-IND with option HO_IND_type = 0b00 indicating commitment to HO and intent to release the serving BS, shall not be expected to monitor serving BS DL traffic after transmission of the MOB_HO-IND message.

6.3.21.2.3 HO cancellation

After an MS or BS has initiated an HO using either MOB_MSHO-REQ or MOB_BSHO-REQ message, the MS may cancel HO at any time.

The cancellation shall be made through transmission of a MOB_HO-IND message that signals the HO cancel option (HO_IND_type = 0b01). If the MS is capable of detecting that the MOB_HO-IND message has been lost (through some implementation specific mechanism, for example by use of a timer), the MS may react as if it detected a drop during HO and apply the procedures specified in 6.3.21.2.6.

When MS transmits and serving BS receives MOB_HO-IND message with the HO cancel option (HO_IND_type = 0b01) during Resource Retain Time (when Resource Retain Flag = 1), regardless of MS attempt at HO, the MS and serving BS shall resume normal operation communication.

6.3.21.2.4 Fast ranging

For the purpose of expediting NW re-entry of the MS with the target BS, the serving BS may negotiate with target BS allocation of a non-contention-based ranging opportunity for the MS, i.e., an unsolicited UL allocation for transmission of RNG-REQ message. The agreed time shall take into account the Handover Indication Readiness Timer (see 11.7.12.6) and BS Switching Timer (see 11.7.12.7).

The MS may learn the required ranging parameters at the target BS at the time of HO. Ranging parameters are based on PHY parameters of the serving BS at the time of HO indication and PHY parameters acquired

from the target BS during or prior to HO, or during scanning of target neighbor BSs and optionally via association.

The serving BS should indicate the time of the fast (i.e., non-contention-based) ranging opportunity, negotiated with the potential target BSs, via Action Time field in the MOB_BSHO-REQ/RSP message.

The target BS(s) shall indicate the fast ranging allocation in the UL-MAP via Fast_Ranging_IE (see 8.3.6.3.9, and 8.4.5.4.19 Fast ranging Information Element). The Action time + T55 provides a bounded interval during which the MS may expect to receive Fast_Ranging_IE.

T55 starts in the frame after the MS expects to receive Fast_Ranging_IE, derived by Action Time.

Upon expiration of this timer, the MS shall not expect the Target BS to grant an UL allocation via Fast_Ranging_IE and shall release the HO_ID.

6.3.21.2.5 Termination with the serving BS

After the HO request/response handshake has completed, the MS may begin the actual HO. At some stage during the HO process, the MS terminates service with the serving BS. This is accomplished by sending a MOB_HO-IND message with the HO_IND_type value indicating serving BS release.

If the HO_IND_type field specifies serving BS release, the BS shall start the Resource retain timer from value Resource_Retain_Time provided by BS in REG-RSP, BSHO-REQ, or BSHO-RSP messages. The serving BS shall retain the connections, MAC state machine, and PDUs associated with the MS for service continuation until the expiration of Resource retain timer. Regardless of Resource retain timer, the serving BS shall remove MAC context and MAC PDUs associated with the MS upon reception of a message from the target BS, over the backbone network, indicating MS Network Attachment at target BS.

If the serving BS determines to retain the connection information of an MS that has sent MOB_HO-IND with HO_IND_type = 0b00 and begun the actual HO, this connection information may be used by the MS in order to perform an expedited reentry operation with target BS or the serving BS. The serving BS shall notify the MS of retention of MS connection information through Resource Retain Flag in MOB_BSHO-RSP message or MOB_BSHO-REQ message during HO request/response handshake operation. If Resource Retain Flag = 1 and Resource Retain Time is not included as a TLV item in the message, then the serving BS and MS shall use the System Resource Retain Time timer.

6.3.21.2.6 Drops during HO

A drop is defined as the situation where an MS has stopped communication with its serving BS (either in the DL or in the UL) before the normal HO sequence outlined in Cell Selection and Termination with the serving BS has been completed.

An MS can detect a drop by its failure to demodulate the DL, or by exceeding the RNG-REQ retries limit allowed for the periodic ranging mechanism. A BS can detect a drop when the Number of retries limit allowed on inviting ranging requests for the periodic ranging mechanism is exceeded.

When the MS has detected a drop during network reentry with a target BS, it may attempt network reentry with its preferred target BS as through Cell Reselection (see 6.3.21.2.1), which may include resuming communication with the serving BS by sending MOB_HO-IND message with HO_IND type = 0b01 (HO cancel) or performing network reentry at the serving BS.

The network reentry process at the serving BS is identical to the network reentry process at any other target BS, both for the serving BS and for the MS. If the serving BS has discarded the MS context, the network

re-entry procedure shall be the same as full network reentry with HO optimization rules and scenarios defined in 6.3.21.2.10.

MS shall perform CDMA ranging with target BS using codes from HO codes domain.

Upon the target BS's sending RNG-RSP with Ranging Status = success, the target BS shall provide CDMA ALLOC IE with appropriate UL allocation for RNG-REQ from MS. MS shall send RNG-REQ with MAC address and HMAC/CMAC. The target BS may now identify that HO attempt by MS was not coordinated with the serving BS and may request all relevant MS context from the serving BS. Using this information, the target BS shall now send RNG-RSP with HO process optimization bitmap and network reentry may continue as in the typical, nondrop case.

When the serving BS has detected a drop, it shall react as if a MOB_HO-IND message has been received with HO_IND_type indicating serving BS release.

6.3.21.2.7 Network entry/reentry

Unless otherwise indicated in this subclause, MS mobile network entry/reentry is processed according to 6.3.9.

Note that in this section, "target BS" may reference the BS that was the serving BS at the time the handover was initiated.

An MS and a target BS shall conduct ranging per 6.3.9.5 except when dedicated ranging opportunity is available, in which case, the procedure described in 6.3.21.2.4 shall be employed. For identification of the MS, RNG-REQ message may include MS MAC Address or HO_ID (if assigned in MOB_BSHO-REQ or MOB_BSHO-RSP). The target BS shall assign to the MS Basic CID and Primary CID in the RNG-RSP management message.

The MS shall signal the target BS of a current HO attempt by including a serving BSID TLV and Ranging Purpose Indication TLV with Bit 0 set to 1 in the RNG-REQ management message. The MS shall not include a Ranging Purpose Indication TLV in the RNG-REQ management message unless actually in the process of conducting an HO, location update, or network reentry from idle mode attempt.

If an MS RNG-REQ includes a serving BSID and Ranging Purpose Indication TLV with Bit 0 set to 1, and the target BS had not previously received MS information over the backbone network, then the target BS may make an MS information request of the serving BS over the backbone network and the serving BS may respond. Regardless of having received MS information from the serving BS, the target BS may request MS information from another network entity via the backbone network.

Network reentry proceeds per 6.3.9, except as may be shortened by the target BS's possession of MS information obtained from the serving BS over the backbone network, and except 6.3.9.10 to 6.3.9.12, which may be postponed until after the MS reenters the network.

To notify an MS seeking HO of possible omission of reentry process management messages during the current HO attempt (due to the availability of MS service and operational context information obtained over the backbone network), the target BS shall place in RNG-RSP an HO Process Optimization TLV indicating which reentry management messages may be omitted. The MS shall complete the processing of all indicated messages before entering normal operation with target BS.

As indicated in the HO Process Optimization TLV settings, the target BS may elect to use MS service and operational information obtained over the backbone network to build and send unsolicited SBC-RSP and/or REG-RSP management messages to update MS operational information, or to include this information into TLV items in the RNG-RSP. If the target BS sends an unsolicited SBC-RSP or unsolicited REG-RSP

message and the MS sends the corresponding SBC-REQ (REG-REQ) message, the BS may ignore only the first corresponding REQ management message received. The MS is not required to send the complimentary REQ management message if it receives an unsolicited SBC-RSP or unsolicited REG-RSP management message prior to MS attempt to send the corresponding REQ management message. target BS reentry unsolicited response management messages may be grouped into the same DL frame transmission with the RNG-RSP. However, unsolicited SBC-RSP and unsolicited REG-RSP may not be grouped together into the same DL frame transmission when the PKM-REQ/RSP management message process is required. For a security keying process that has not been determined to be omitted in the HO Process Optimization TLV settings, if MS RNG-REQ includes an serving BSID and Ranging Purpose Indication TLV with Bit 0 set to 1, and target BS has received a message over the backbone network containing MS information, MS and target BS shall use the embedded TLV PKM-REQ information and the reauthorization process as defined in 7.2. When the HO Process Optimization TLV is included in RNG-RSP sent to an MS performing network re-entry from idle mode, Bit 6 does not refer to any ARQ state (blocks in ARQ window and associated timers). It refers only to SFIDs and related settings (QoS descriptors and CS classifier information) for all Service Flows that the MS had established when it entered idle mode as well as any SAs and their related keying material.

If the MS finishes the re-entry registration procedure by successfully receiving either an unsolicited REG-RSP message or a RNG-RSP message including REG-RSP specific TLV items, the MS shall send a notification of MS's successful reentry registration when Bit 12 of the HO Process Optimization TLV in the RNG-RSP message is set to one (see 6.3.21.2.7).

When optimization bit 8 is cleared (=0) the BS shall send an unsolicited SBC-RSP management message with updated capabilities information.

When optimization bit 10 is cleared (=0) the BS shall send an unsolicited REG-RSP management message with updated capabilities information.

When optimization bit 12 is set, the MS may use any uniquely identifiable indication as notification of MS's successful re-entry registration. The following are examples of such indications:

— MS transmits data in unsolicited UL grant by the target BS (i.e., MS has pending UL data) using newly assigned transport CID.
— MS transmits Bandwidth request header of type 0b001 with BR per desired BW when MS has pending UL data using newly assigned transport CID.
— MS transmits Bandwidth request header of type 0b000 or 0b001 with BR=0 when MS has no pending UL data using newly assigned basic CID.
— MS transmits any MAC signaling header type I with its CID field set to a newly assigned transport or basic CID and (if included) its incremental BR field set to 0.
— MS transmits HARQ ACK using the ACKCH slot assigned by the target BS.
— MS transmits CQI code using the CQICH slot assigned by the target BS.

When, during capabilities negotiation, MS specifies that it supports IEEE 802.16 security, if the normal PKM initial network entry process as defined in 7.2 is to be abridged or omitted, then the MS shall include the HMAC/CMAC Tuple as the last message item in the RNG-REQ management message using the AK and key sequence number derived for use on the target BS. If the required HMAC/CMAC Tuple is invalid or omitted in the RNG-REQ management message, then the full PKM REQ/RSP sequence shall be completed and cannot be omitted. The target BS shall include a valid HMAC/CMAC Tuple as the last message item in the RNG-RSP if it instructs the MS, through the HO Process Optimization TLV, that the PKM-REQ/RSP sequence may be omitted. If the HO Process Optimization TLV Bit 1 included in the RNG-RSP is set to 0, the HMAC/CMAC Tuple is not attached to the RNG-RSP message.

EAP phase is agnostic to HO, thus it may start at the serving BS and continue at the target BS. EAP packet drops may occur during HO interruption time and it should be handled by EAP state machines in the participating entities (supplicant and authenticator).

If MS RNG-REQ includes a serving BSID and Ranging Purpose Indication TLV with Bit 0 set to 1, and target BS has received a message over the backbone network containing MS information, the target BS may use MS service and operational information obtained over the backbone network to build and send a REG-RSP message or a RNG-RSP message with REG-RSP encodings TLV that includes service flow remapping information in SFID, New_CID, and Connection_Info TLVs.

During HO, the target BS may notify the MS, through the Bit 9 MS DL data pending element of the HO Process Optimization TLV item in RNG-RSP, of post-HO re-entry MS DL data pending. Upon MS successful re-entry at the target BS, now the new serving BS, the new serving BS can transmit forwarded data (called "pre-HO pending MS DL data") to the MS. After completing reception of any HO pending MS DL data retained and forwarded, the MS may re-establish IP connectivity and the new serving BS may send a message over the backbone network to request the old serving BS or other network entity to stop forwarding pre-HO pending MS DL data.

Network entry/reentry process completes with establishment/reestablishment of provisioned connections.

When the target BS has detected a failed HO entry/re-entry attempt, it may inform the serving BS of HO failure through a message over the backbone network indicating Handover Failure.

6.3.21.2.8 MS-assisted coordination of DL transmission at target BS for HO

If both the serving BS and the target BS involved in the HO process can support continuity of ARQ- or SDU_SN-enabled connections, the BSs and the MS may perform MS-assisted coordination of DL transmission during HO as described in this subclause. The target BS may signal to the MS on the intention to apply this procedure using Bit 11 of HO Process Optimization flag in the RNG-RSP message.

Once the MS has successfully completed HO to the target BS (now the new serving BS), to maintain continuity of transmission to the MS between the old and new serving BSs, the last successfully received information unit needs to be identified to the new serving BS. Depending on whether the connection is ARQ-enabled or ARQ-disabled, the identity of the next information unit can be given by the ARQ block sequence number or the MAC SDU sequence number respectively.

MS can optionally support the feedback of the ARQ block sequence number or the virtual MAC SDU sequence number after the MS has successfully completed HO to the target BS. The capability and the support for each connection are defined in the REG-REQ/RSP and DSA-REQ/RSP TLVs respectively.

— For ARQ-enabled, the ARQ block sequence number is already available at the MS.
— For ARQ-disabled, the following procedures shall be performed by the BS and the MS: the old serving BS shall include a SDU SN extended subheader at least once every 2^p MAC PDUs, where p is specified in the MAC header and extended subheader support TLV (11.7.21). Upon transmitting MOB_BSHO-RSP (in response to receiving MOB_MSHO-REQ, in case of MS-initiated HO) or upon transmitting MOB_BSHO-REQ (in case of BS-initiated HO), if the old serving BS continues transmission of data to the MS, it shall include SDU SN extended subheader in MAC PDU at least once before "Estimated HO time" (the first time that MS is expected to communicate with the target BS). The MS shall maintain MAC SDU sequence number based on the information received from the BS. When the MS receives a MAC PDU without SDU SN extended subheader, the MS shall increment the MAC SDU sequence number by one for every SDU received. When the MS receives MAC SDU sequence number from the BS, it shall reset the MAC SDU sequence number to the value included in SDU SN extended subheader.

Upon completion of network reentry, the target BS (now the new serving BS) should provide UL allocation for the MS sufficient for transmission of SN report MAC header with LSBs of the sequence number(s) of ARQ block or virtual MAC SDU number. After reception of SN report MAC header, the BS shall resume transmission of the data of the corresponding DL service flow starting from MAC SDUs pointed by the sequence number. At the completion of network reentry, the MS shall send SN report MAC headers (as described in 6.3.2.1.2.1.7) that include the next ARQ Block (or virtual MAC SDU) sequence number that it is expecting for each of its connections that have SN feedback enabled. The MS shall send the sequence number in numerical ascending order of the values of the SFIDs values. The new serving BS may send the SN request extended subheader to explicitly request an MS to send additional SN report header. After receiving the SN request extended subheader, the MS shall send the requested SN report header. The new serving BS provides allocation through UL-MAP IE for the MS to send the additional SN report header.

6.3.21.2.8.1 Context management during optimized HO

The MS may use any context at the target BS (static and dynamic) that was acquired with the serving BS if it supports optimized HO. However, some of the dynamic context may change to accommodate proper NW re-entry operation at the target BS.

The MS shall retain its context with the serving BS, if HO cancellation is supported by both the serving BS and the MS. Some of the dynamic context may change to accommodate proper operation upon HO cancellation.

The following specifies the expected settings of the MS context during HO (the context is categorized for simplicity of depiction):

6.3.21.2.8.1.1 BS PHY settings

Knowledge about the BS maintained by MS (e.g., FFT size, BW, CP, frame size, DL frequency): MS may maintain serving BS PHY settings until expiration of resource retain timer or until successful HO to the target BS.

6.3.21.2.8.1.2 BS Channel descriptor settings

Knowledge about the BS maintained by MS**:** MS may maintain serving BS Channel descriptor settings until expiration of resource retain timer or until successful HO to the target BS.

Target BS channel descriptor settings are acquired by MS via neighbor advertisement, in association with Configuration Change Count (CCC) value.

During the HO, the MS shall verify that the DCD/UCD configuration change counts (CCCs) of the target BS (according to DL/UL-MAP) are identical to DCD/UCD CCCs as they appeared in MOB_NBR-ADV message of the serving BS. Then target BS channel descriptor settings shall be used by the MS during Network Re-entry. Otherwise, MS shall wait until it receives DCD/UCD or cancel HO or perform HO to another target BS.

T1 and T12 are reset upon successful match.

6.3.21.2.8.1.3 Ranging settings

MS context with Serving BS: All timers and associated retry counters are reset (T2, T3, T4 etc).

MS context with Target BS: All timers and associated retry counters are reset (T2, T3, T4 etc).

T2 is restarted upon obtaining both DCD and UCD.

If Fast_ranging_IE is used, MS may perform autonomous ranging or use parameters acquired through association (if supported). In case of autonomous ranging failure, MS may perform CDMA ranging with HO codes or cancel HO or attempt HO to another target BS.

MS shall restart T4 upon successful ranging completion (fast ranging or CDMA ranging).

6.3.21.2.8.1.4 Basic capabilities settings:

MS context with Serving BS: Maintained with resource retain timer.

MS context with Target BS: If static context is shared and basic capabilities of the target BS differ from the serving BS, then the target BS shall convey updated basic capabilities (only TLVs with the different capabilities). The target BS instructs how basic capabilities shall be updated via HO process optimization TLV settings: If bit 0=0, then MS shall send SBC-REQ message (to which the target BS shall respond with SBC-RSP message). If bit 0=1 AND bit 8=0, then MS shall await an unsolicited SBC-RSP message.

In case of full optimized HO, the target BS should not update any basic capabilities.

6.3.21.2.8.1.5 Registration settings

MS context with Serving BS: Maintained with resource retain timer.

MS context with Target BS: If static context is shared between the serving BS and the target BS and capabilities of the target BS, as defined thru registration, differ from the serving BS, then the target BS shall convey updated capabilities (only TLVs with the different capabilities). The target BS instructs how registration capabilities shall be updated via HO process optimization TLV settings: If bit 7=0, then MS shall send REG-REQ message to which the target BS shall respond with REGC-RSP message. If bit 7=1 AND bit 10=0, then MS shall await an unsolicited REG-RSP TLV.

In case of full optimized HO, the target BS should not update any registration settings (excluding CIDs, SAIDs).

6.3.21.2.8.1.6 Service flows settings

6.3.21.2.8.1.6.1 Service flows—static context

Service flows configuration is considered static context.

MS context with Serving BS: Maintained with resource retain timer.

MS context with Target BS: When static context is shared between the serving BS and the target BS, then all service flow parameters remain unchanged (except for CIDs and SAIDs that may change).

When service flow parameters at the target BS are different than the serving BS, the target BS shall use CID update and or SAID update as part of the REG-RSP encodings TLV in RNG-RSP, or DSC-REQ messages upon HO completion, to change the configuration of the connections, as required.

6.3.21.2.8.1.6.2 Service flows—dynamic context, non-ARQ enabled connections

MS context with Serving BS: SDU fragments are maintained with resource retain timer.

MS context with Target BS:

Downlink: Either continuation at fragment-level or SDU-level is allowed.

Continuation at fragment-level: The target BS may transmit the fragment, following the last SDU fragment that was transmitted by the serving BS. For example: If a SDU consists of fragments A and B, and due to HO, the serving BS transmitted fragment A but not B, then the target BS shall continue from fragment B (not retransmit fragment A).

Continuation at SDU-level: The target BS may retransmit last outstanding SDU or drop it and continue to next complete SDU.

Upon HO completion, if commanded by the target BS (via bit 12=1), the MS shall transmit SN_REPORT header with last received SDU SN per SDU SN-enabled CID.

Uplink: If bit 6 is set to 1, the MS shall transmit to the target BS the fragment after the last transmitted fragment at the serving BS. If bit 6 is set to 0, the MS shall continue at the SDU level.

6.3.21.2.8.1.6.3 Service flows—dynamic context, ARQ enabled connections

MS context with Serving BS: ARQ window contents shall be maintained with resource retain timer. The serving BS may pause or reset timers associated with ARQ Blocks. MS shall continue the timers.

MS context with Target BS:

If bit 6=0, ARQ window shall be reset automatically by transmitters (MS and target BS), without explicit ARQ_reset. Regardless, MS and/or target BS may send ARQ_reset.

If bit 6=1, then the following behavior is expected upon HO completion:

— ARQ window contents shall be transferred from the serving BS to the target BS. Target BS shall continue BSN numbering from serving BS (in both DL and UL).Target BS may pause or reset timers associated with ARQ Blocks.
— The Target BS shall continue the BSN numbering from the serving BS for both DL and UL connections.

Downlink:

— If MS received DISCARD message from the serving BS but couldn't reply with acknowledgement, the MS shall send the acknowledgement to the target BS. The MS may send the acknowledgements immediately after HO completion or may postpone it depending on the state of its internal timers.
— The Target BS shall never transmit the ARQ blocks up to the one specified in the last DISCARD message from the serving BS. The target BS may re-transmit the DISCARD message (first transmitted by the serving BS) immediately after HO or it may postpone the retransmission up until ARQ_RETRY_TIMEOUT after HO completion. If the target BS does not receive the acknowledgement for the discarded blocks it shall retransmit DISCARD message at the intervals equal to ARQ_RETRY_TIMEOUT until it receives the acknowledgement.
— If the MS had successfully received an ARQ block from the serving BS but could not send the acknowledgement to the serving BS, the MS shall send the acknowledgement to the target BS. The MS shall send the acknowledgements immediately after HO completion or may postpone it depending on the state of its internal timers.
— If the serving BS has transmitted an ARQ block to the MS, but it was not acknowledged by the MS, the target BS shall start retransmitting the ARQ block either immediately after HO completion or later, depending on the state of the internal timers until it receives the acknowledgement from the MS.
— If the serving BS has transmitted an ARQ block to the MS, and it was acknowledged by the MS, the target BS shall not transmit it again.

Uplink:

— The MS assumes that the network is capable of re-assembling the SDU parts, which may have been received by different Base Stations.
— If the serving BS has successfully received an ARQ block from the MS but could not reply with acknowledgement to the MS, the target BS shall send the acknowledgement to the MS. The target BS may send the acknowledgements immediately after HO completion or may postpone it depending on the state of its internal timers.
— If the MS has been transmitted an ARQ block to the serving BS, but did not receive acknowledgement from the serving BS, the MS shall start retransmitting it to the target BS either immediately after HO completion or later, depending on the state of the internal timers until it receives the acknowledgement from the MS.
— If the MS has transmitted an ARQ block to the serving BS, and received acknowledgement from the serving BS, the MS shall not transmit it again upon HO completion.

6.3.21.2.8.1.6.4 Service flows - dynamic context, HARQ enabled connections

MS context with Serving BS: All dynamic HARQ context is reset in both DL and UL. HARQ data buffers are purged, buffered softbits are cleared and AI_SN on all ACIDs are set to zero.

MS context with Target BS: All dynamic HARQ context is reset in both DL and UL. HARQ data buffers are purged, buffered softbits are cleared and AI_SN on all ACIDs are set to zero. Regardless of bit 6, HARQ ACID and channel mapping is maintained (unique per service flow). PDU SN (if enabled) shall be reset and then follow the rules of service flow state for non-ARQ and ARQ connections as described above.

6.3.21.2.8.1.6.5 Outstanding bandwidth requests

MS context with Serving BS: Reset.

MS context with Target BS: Reset (not transferred from the serving BS). MS shall transmit bandwidth request of remaining (outstanding) bytes.

6.3.21.2.8.1.6.6 Security settings

MS context with Serving BS: Maintained with resource retain timer,

MS context with Target BS: Context is handled per bit 1 and bit 2 settings.

Bit 1=0 AND bit 2=0:Perform re-authentication and SA-TEK 3-way handshake. BS shall not include SA-TEK-Update TLV in the SA-TEK-Response message. In addition, the RNG-RSP message does not include SA-TEK-Update TLV.

Bit 1=0 AND bit 2=1:Not used. MS shall silently ignore RNG-RSP message.

Bit 1=1 AND bit 2=0: SA-TEK-Update TLV is included in the RNG-RSP message and updates the TEKS for all the SAs.

Bit 1=1 AND bit 2=1:Re-authentication is not performed. The RNG-RSP message does not include SA-TEK-Update TLV. All the TEKs received from the serving BS are reused. All PMK timers are maintained.

SAID update:

When re-authentication is not required and SAID_update TLV is excluded from the RNG-RSP message during network re-entry, it means that SAID value(s) shall be the same value(s) as the value(s) used in

previous serving BS and the value of Primary SAID will be implicitly updated because MS and BS use the same value as that of Basic CID.

Regardless, the target BS may include SAID_update TLV within RNG-RSP message by including compound REG-RSP encodings TLV.

When target BS allocates SAID (excluding the primary SAID) during handover re-entry, the target BS should allocate the new SAID with same value of SAID that was used in serving BS in order to avoid possible mismatch of old SAID.

For more information on security context management during HO, see 6.3.21.2.8, HO during re-authentication.

6.3.21.2.8.1.6.7 Power Saving Class settings

MS context with Serving BS: Maintained with resource retain timer

MS context with Target BS:

All Power Saving Class related configurations, timers and states are reset.

The MS shall locally deactivate all active Power Saving Classes to perform HO. The MS and the serving BS shall not initiate new sleep transactions during HO negotiation. If there is some ongoing MS-initiated sleep transaction when HO negotiation starts and the MS receives the MOB_SLP-RSP message before transmitting the MOB_HO-IND message, the MS shall successfully complete this transaction accepting all PSC definitions from MOB_SLP-RSP message, but shall not activate any PSCs. If the MOB_SLP-RSP message is not received before handover to the target BS or before expiration of timer T43, the MS shall terminate the sleep transaction. If the serving BS receives MOB_SLP-REQ message after HO negotiation has started and before HO cancellation, the serving BS shall reject PSC definition(s) and shall not send MOB_SLP-RSP message.

The MS may reenter sleep mode, upon HO completion at the target BS, by transmitting a MOB_SLP-REQ message, which shall include all requested Power Saving Class configurations. If the MS cancels HO and returns to normal operation with its previous serving BS, it may re-enter sleep mode by activating retained PSC configurations. The MS should not include the definition of a retained Power Saving Class in a MOB_SLP-REQ message after HO cancellation unless some sleep transaction was terminated by the MS during HO.

6.3.21.2.8.1.7 Scanning—dynamic and static context

MS scanning context with Serving BS: Reset.

MS scanning context with Target BS: Reset.

The MS shall terminate all scanning activity including the outstanding scanning negotiation and group of scanning and/or reporting intervals to perform HO.

6.3.21.2.9 HO process

Figure 146 shows the process of an MS initiating HO with the BS.

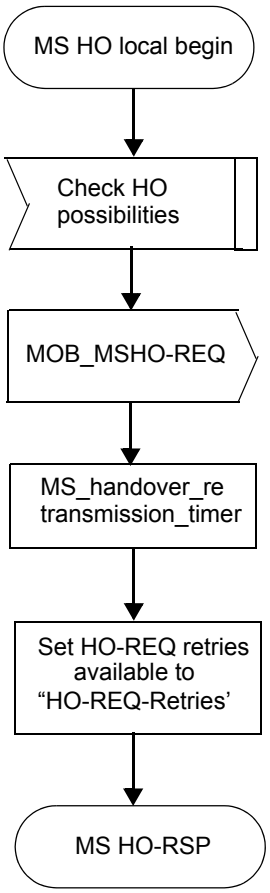

Figure 146—MS initiating HO with the BS

Figure 147 shows the process of an MS waiting for a response from the BS; in addition, it presents the case in which the MS has decided to stop the HO in the middle of the process.

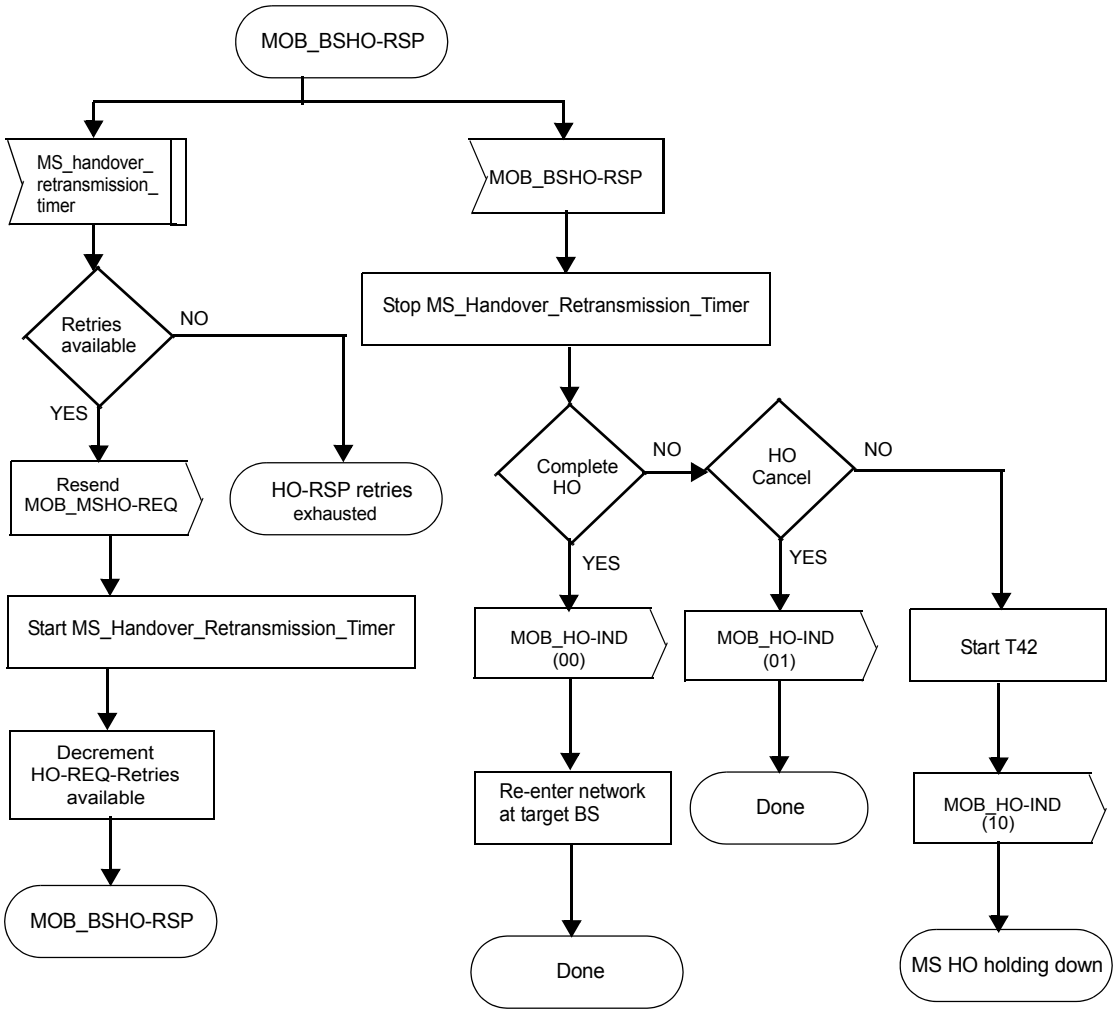

Figure 147—Locally Initiated Transaction MOB_BSHO-RSP Pending state flow diagram

Figure 148 shows the process of an MS following a rejecting of the HO and ensuring that the MOB_HO-IND message was received by the BS (by expiration of T42 timeout). While waiting, if new HO process is required, the MS shall stop T42 timer without waiting.

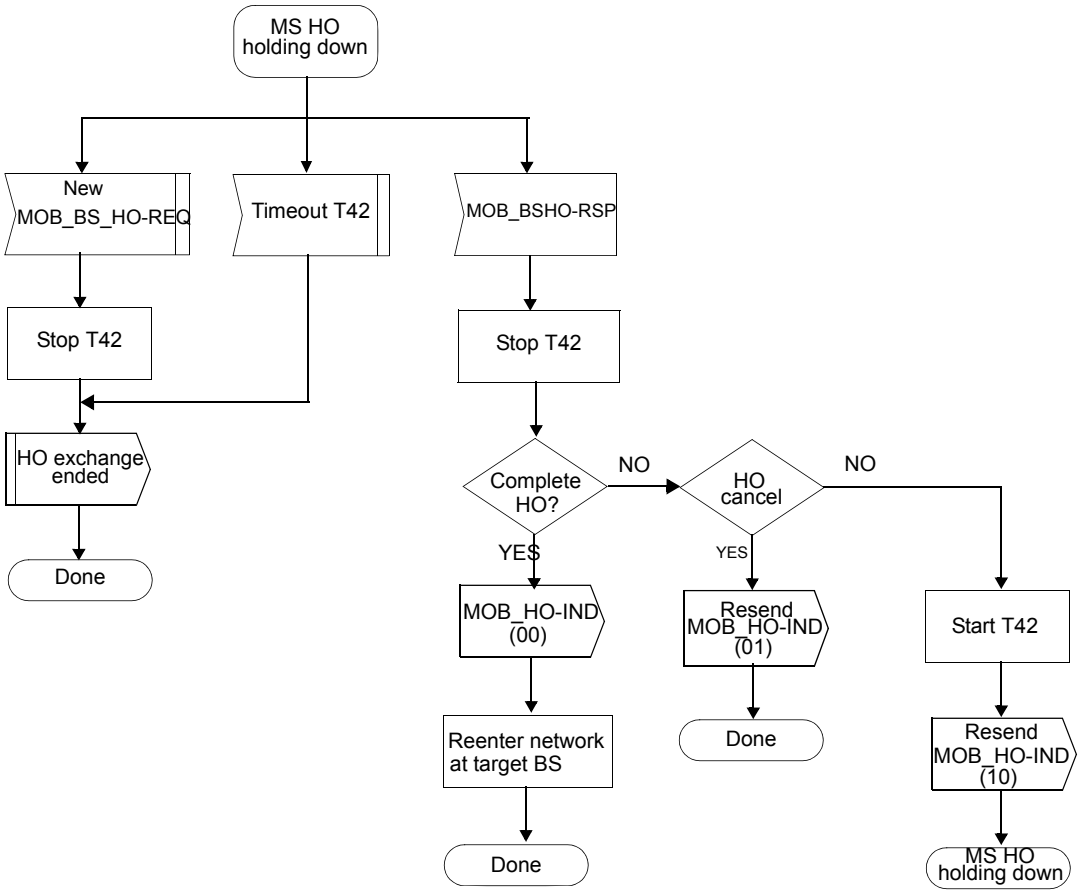

Figure 148—Typical MS Listening state flow diagram

Figure 149 shows the process of an MS receiving a MOB_BSHO-REQ message from the BS; in addition, it presents the case in which the MS has decided to stop the HO in the middle of the process.

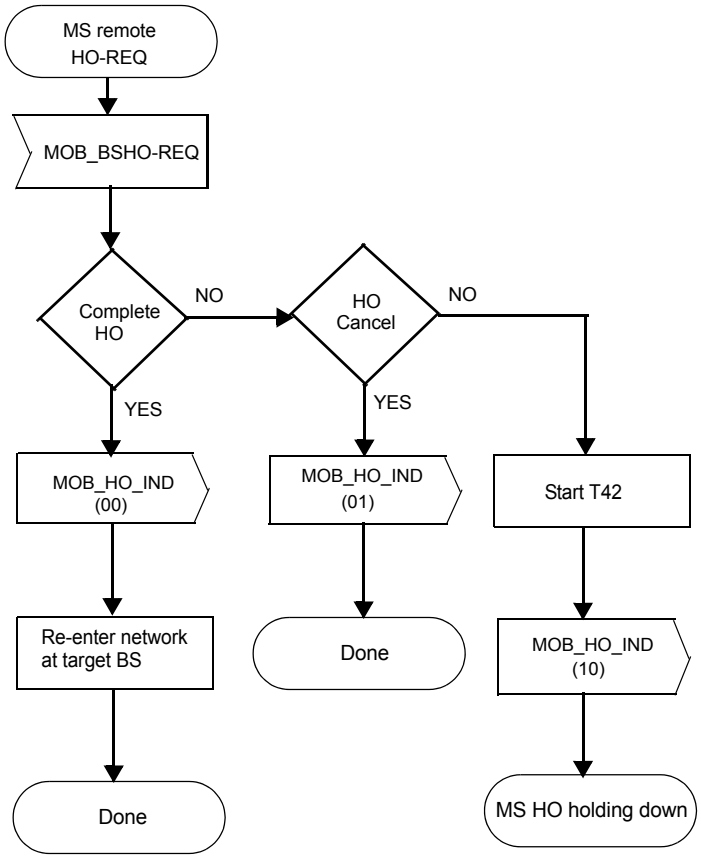

Figure 149—MS state flow diagram for remotely initiated MOB_BSHO-REQ

6.3.21.2.10 HO optimization rules and scenarios

The bitmap of the HO process optimization TLV in RNG-RSP message during HO shall be set according to the following rules:

Non-managed SS (i.e., SSs that do not support secondary management connection)

— HO process optimization bit 3 = 1 (omit DHCP)
— HO process optimization bit 4 = 1 (omit time-of-day acquisition)
— HO process optimization bit 5 = 1 (omit TFTP phase)
— All other bits: don't care (i.e., do not depend on SS management support)

SBC-REQ/RSP consistency:
When HO process optimization bit 8 is set to 0, HO process optimization bit 0 shall be set to 1

REG-REQ/RSP consistency:
When HO process optimization bit 10 is set to 0, HO process optimization bit 7, shall be set to 1

The bitmap of the HO process optimization TLV in RNG-RSP message during HO shall be set according to the following scenarios:

— **Full optimized HO scenario**
  Both static and dynamic context are shared between the serving BS and the target BS.
  HO process optimization TLV settings:
  — HO process optimization bit 0 = 1
  — HO process optimization bit 1 = 1
  — HO process optimization bit 2 = 1
  — HO process optimization bit 6 = 1
  — HO process optimization bit 7 = 1
  — HO process optimization bit 8 = 1
  — HO process optimization bit 10 = 1
  — All other bits, except reserved bits = Don't care (i.e., not dependant on optimization case)

— **Full optimized HO scenario with TEK updates**
  Both static and dynamic context are shared between the serving BS and the target BS.
  HO process optimization TLV settings:
  — HO process optimization bit 0 = 1
  — HO process optimization bit 1 = 1
  — HO process optimization bit 2 = 0 (When SA-TEK Update TLV is sent in RNG-RSP)
  — HO process optimization bit 6 = 1
  — HO process optimization bit 7 = 1
  — HO process optimization bit 8 = 1
  — HO process optimization bit 10 = 1
  — All other bits, except reserved bits = Don't care (i.e., not dependant on optimization case)

— **Optimized HO with static context sharing scenario**
  Static context only (i.e., no dynamic context) is shared between the serving BS and the target BS.
  HO process optimization TLV settings:
  — HO process optimization bit 0 = 1
  — HO process optimization bit 1 = 1
  — HO process optimization bit 2 = 0 (When SA-TEK Update TLV is sent in RNG-RSP)
  — HO process optimization bit 6 = 0
  — HO process optimization bit 7 = 1
  — HO process optimization bit 8 = 1
  — HO process optimization bit 10 = 1
  — All other bits, except reserved bits = Don't care (i.e., not dependant on optimization case)

— **Full network entry without traffic IP address refresh** (no optimization):
  No context sharing between the serving BS and the target BS.
  HO process optimization TLV settings:
  — HO process optimization bit 0 = 0
  — HO process optimization bit 1 = 0
  — HO process optimization bit 2 = 0
  — HO process optimization bit 6 = 0
  — HO process optimization bit 7 = 0
  — HO process optimization bit 8 = 1
  — HO process optimization bit 10 = 1
  — HO process optimization bit 11 = 0
  — HO process optimization bit 12 = 0
  — HO process optimization bit 13 = 0
  — All other bits, except reserved bits = Don't care (i.e., not dependant on optimization case)

— **Full network entry with traffic IP address refresh (no optimization):**
No context sharing between the serving BS and the target BS.
HO process optimization TLV settings:
— HO process optimization bit 0 = 0
— HO process optimization bit 1 = 0
— HO process optimization bit 2 = 0
— HO process optimization bit 6 = 0
— HO process optimization bit 7 = 0
— HO process optimization bit 8 = 1
— HO process optimization bit 10 = 1
— HO process optimization bit 11 = 0
— HO process optimization bit 12 = 0
— HO process optimization bit 13 = 1
— All other bits, except reserved bits = Don't care (i.e., not dependant on optimization case).

In the full network entry scenarios the RNG-RSP message carrying the HO process optimization TLV above shall not be signed with HMAC/CMAC.

6.3.21.2.11 Seamless HO

In addition to Optimized HO, MS and BS may perform Seamless HO to reduce HO latency and message overhead. The capability of Seamless HO is negotiated by REG-REQ/RSP message (see 11.7.12.5).

If any authorization policy, except "No Authorization," is negotiated between MS and BS, seamless HO also requires support for counter-based TEK Generation for HO (see 7.2.2.2.6).

To perform Seamless HO for an MS in the serving BS, the target BS(s) and the MS shall support Seamless HO as well. A BS supporting Seamless HO shall include the Connection identifier descriptor TLV in the DCD message. In Seamless HO, a target BS calculates Primary management CID, Secondary management CID, and Transport CIDs for an MS by using the descriptor.

During Seamless HO, a serving BS shall include the Pre-allocated Basic CID in MOB_BSHO-REQ/RSP for an MS. When a BS pre-allocates a Basic CID to an MS during Seamless HO, the primary management CID is allocated autonomously without explicit assignment in the message. If n-th Basic CID within the range 0x0001– m (see Table 558) is allocated, the n-th Primary Management CID in the range m+1 – 2m shall be allocated to the same MS in ascending order. The Primary management CID is derived by adding 'm' to the Basic CID, where 'm' is given by Connection identifier descriptor in DCD message.

When a BS assigns Pre-allocated Basic CID, it also reserves a block of continuous transport CIDs, where the number of CIDs is 'a' within the range 2m+1–0xFE9F (see Table 558). The block of continuous transport CIDs starts from the 2m+1 and each block consists of continuous 'a' number of CIDs, where 'a' is given by Connection identifier descriptor in DCD message.

Once CIDs have been pre-allocated, the BS shall determine and indicate whether it will perform Seamless HO by including the Seamless HO mode flag into MOB-BSHO-REQ/RSP message. When the MS receives MOB_BSHO-REQ or MOB_BSHO-RSP message with the Seamless HO mode flag set to 1 (indicates support), the MS can perform Seamless HO by transmitting a HO-IND message including the BSID of a BS among the recommended BSs that indicate support for seamless HO (i.e., a BS for which the Seamless HO mode flag was set to 1 in the BSHO_REQ/RSP message). If the MS transmits a HO-IND message including the BSID of any BS other than the recommended BSs which indicate support for Seamless HO then Seamless HO is not applied for this BS.

The MOB_BSHO-REQ or MOB_BSHO-RSP message may contain a specific action time. If this value is specified, pre-allocated CIDs are valid at the target BS after the time specified by the action time. A value of 0 indicates that the pre-allocated CIDs are already valid and MS may initiate Seamless HO at anytime.

During seamless HO, the target BS (T-BS) may allocate downlink and uplink resource for the MS before the RNG-REQ/RSP message transaction, as shown in Figure 150.

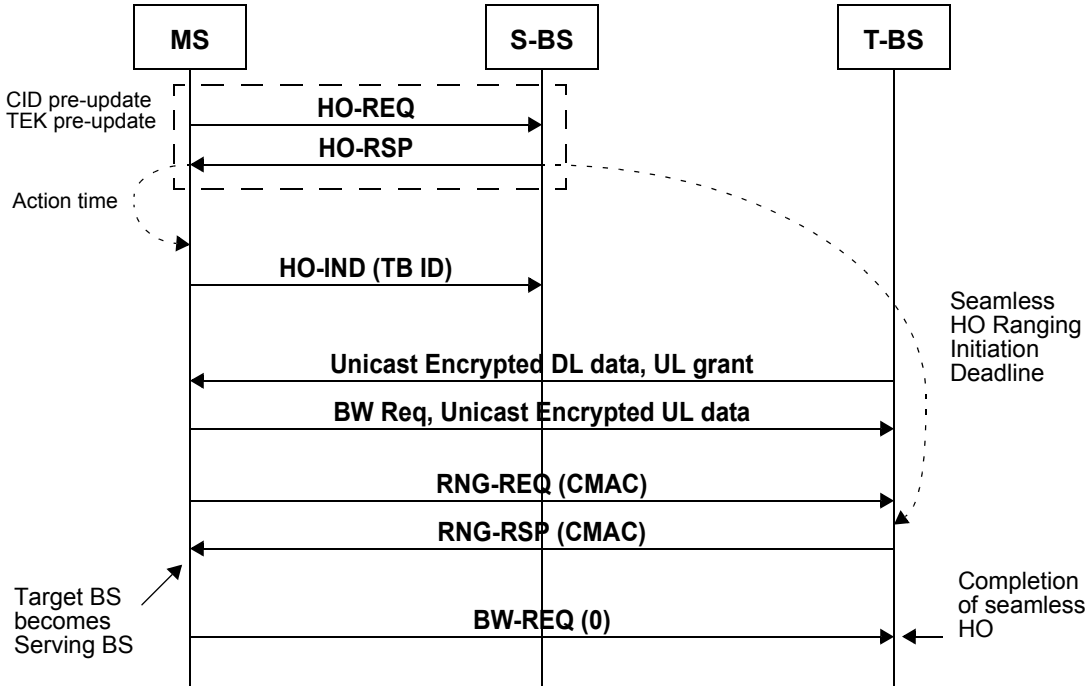

Figure 150—Example of a seamless HO dialog

During Seamless HO, the MS is required to initiate the RNG-REQ/RSP message transaction by sending a RNG-REQ message before the deadline specified by the "Seamless HO Ranging Initiation Deadline" attribute included in BSHO-REQ/RSP message during handover preparation. The time is measured from the time the BSHO-REQ/RSP message is transmitted. If the Target BS does not receive a RNG-REQ message from the MS within the deadline defined by the "Seamless HO Ranging Initiation Deadline" attribute, the Target BS considers the seamless HO as failed and stops allocating bandwidth to the MS. It is recommended that the BS allows time equal to T3 timer (Table 554) before it reuses the CIDs that were allocated to the MS. The MS considers the seamless HO as failed if it does not transmit RNG-REQ message before the deadline. If the MS transmits RNG-REQ within the deadline, it may still consider the HO as failed if it does not receive a RNG-RSP within T3 after the last transmission or retransmission of RNG-REQ that was performed within the deadline. When the MS considers the seamless HO as failed, it invalidates the pre-allocated CIDs. In all cases, even when the RNG-REQ/RSP message transaction is initiated before the deadline, the Seamless HO is considered failed if the RNG-REQ/RSP procedure fails.

When data packets are exchanged before the RNG-REQ/RSP transaction is completed, the recipient (MS or BS) should store the received data packets and not release them to the upper layers until the sender is authenticated. If the data packets belong to a service flow associated with an SA that supports data authentication (as indicated by the data authentication algorithm identifier in the cryptographic suite of the SA) the receiver can authenticate the sender by verifying that the ciphertext authentication code included in

each data packet was produced with the TEK associated with this SA. If the data packets belong to a service flow associated with an SA that does not support data authentication the receiver can authenticate the sender when the RNG-REQ/RSP transaction completes successfully. In all cases, if the sender is authenticated, the decrypted data packets are released to the upper layer in the recipient, and if the sender is not authenticated the data packets are discarded.

The RNG-REQ/RSP transaction for Seamless HO is shown in Figure 150. The MS shall initiate the RNG-REQ/RSP transaction by transmitting a RNG-REQ message to the target BS before the deadline specified by the "Seamless HO Ranging Initiation Deadline" attribute included in BSHO-REQ/RSP message during handover preparation. The RNG-REQ message shall include Basic CID, CMAC_KEY_COUNT and a valid HMAC/CMAC tuple. Ranging Purpose Indication TLV with Bit 2 set to 1, but not include MS MAC address or previous serving BSID. When BS receives the RNG-REQ message, BS shall respond to the RNG-REQ message by transmitting RNG-RSP message with valid HMAC/CMAC tuple. The RNG-RSP message shall include Basic CID but does not need to include any CID update TLV or SA-TEK-Update TLV for unicast connections.

When MS receives the RNG-RSP message from the target BS, the target BS becomes the serving BS of the MS and the MS shall transmit a BR header with 0 bandwidth request. When BS receives the BR header, the Seamless HO procedure completes successfully.

6.3.21.3 Macro diversity handover (MDHO) and fast BS switching

In addition to the HO procedures previously discussed, there are two optional HO modes, MDHO and FBSS. The MDHO or FBSS capability can be enabled or disabled in the REG-REQ/RSP message exchange. With MDHO or FBSS enabled, the MS shall perform the following stages:

— MDHO Decision: A MDHO begins with a decision for an MS to transmit to and receive from multiple BSs at the same time. A MDHO can start with either MOB_MSHO-REQ or MOB_BSHO-REQ messages.
— FBSS HO Decision: A FBSS HO begins with a decision for an MS to receive/transmit data from/to the anchor BS that may change within the diversity set. A FBSS HO can be triggered by either MOB_MSHO-REQ or MOB_BSHO-REQ messages.
— Diversity Set Selection/Update: An MS may scan the neighbor BS and select BSs that are suitable to be included in the diversity set. The MS shall report the selected BSs and the diversity set update procedure shall be performed by the BS and the MS.
— Anchor BS Selection/Update: An MS is required to continuously monitor the signal strength of the BSs that are included in the diversity set. The MS shall select one BS from its current diversity set to be the anchor BS and reports the selected anchor BS on CQICH or MOB_MSHO-REQ message.

If MOB_BSHO-RSP specifies another HO type value than requested by MOB_MSHO-REQ (for example, the MS requested HO and the BS prescribes MDHO/FBSS), then the MS should perform the procedure specified by the BS.

The MS should perform the procedure specified by the BS in HO Type field of MOB_BSHO-REQ.

When a diversity set and an anchor BS are maintained at the MS and the BS, the BS can decide to put the MS MDHO on a per burst allocation basis, based on factors such as QoS of a particular service flow being transmitted.

6.3.21.3.1 MDHO decision and initiation

Support of MDHO is optional for both the MS and the BS.

For an MS and a BS that support MDHO, the MS and the BS shall maintain a list of BSs that are involved in MDHO with the MS. The list is called the diversity set. Among the BSs in the diversity set, an anchor BS is defined. Regular operation when MS is registered at a single BS is a particular case of MDHO with diversity set consisting of single BS, which in this case shall be the anchor BS. When operating in MDHO, the MS communicates with all BSs in the diversity set for UL and DL unicast messages and traffic.

There are two methods for the MS to monitor DL control information (i.e., DL-MAP, UL-MAP, and FCH) and DL broadcast messages. The first method is the MS monitors only the anchor BS for DL control information and DL broadcast messages. In this case, the DL-MAP and UL-MAP of the anchor BS may contain burst allocation information for the nonanchor active BS. The second method is the MS monitors all the BSs in the diversity set for DL control information and DL broadcast messages. In this case, the DL-MAP and UL-MAP of any active BS may contain burst allocation information for the other active BSs. The method to be used by MS is defined during the REG-REQ and REG-RSP handshake.

A MDHO begins with a decision for an MS to transmit/receive unicast messages and traffic from multiple BSs at the same time interval. For DL MDHO, two or more BSs provide synchronized transmission of MS DL data so that diversity combining can be performed by the MS. For UL MDHO, the transmission from an MS is received by multiple BSs so that selection diversity of the information received by multiple BSs can be performed.

The BS supporting MDHO shall broadcast the DCD message that includes the H_Add Threshold and H_Delete Threshold. These thresholds are used by the MDHO capable MS to determine if MOB_MSHO-REQ should be sent. When long-term CINR of a active BS in the current diversity set is less than H_Delete Threshold, the MS shall send MOB_MSHO-REQ to requires dropping this active BS from the diversity set; when long-term CINR of a neighbor BS is higher than H_Add Threshold, the MS shall send MOB_MSHO-REQ to require adding this neighbor BS to the diversity set.

The decision to update the diversity set begins with a notification by the MS through the MOB_MSHO-REQ message or by the BS through the MOB_BSHO-REQ management message. The process of anchor BS update may begin with MOB_MSHO-REQ from MS or MOB_BSHO-REQ from the anchor BS. Acknowledgement with MOB_BSHO-RSP of a notification is required. After MS transmits MOB_MSHO-REQ, MS shall not transmit any MOB_MSHO-REQ prior to expiration of timer MS_handover_retransmission_timer. MS shall deactivate timer MS_handover_retransmission_timer on MS transmission of MOB_HO-IND or MS receipt of MOB_BSHO-RSP. Process of anchor BS update may also begin with anchor switching indication via fast-feedback channel.

If an MS that transmitted a MOB_MSHO-REQ message detects an incoming MOB_BSHO-REQ message, it shall ignore that MOB_BSHO-REQ message. A BS that transmitted a MOB_BSHO-REQ message and detects an incoming MOB_MSHO-REQ or MOB_HO-IND message from the same MS shall ignore its own previous request.

The BSs involving in MDHO with an MS shall use the same set of CIDs for the connections that are established with the MS. The BS may assign a new set of CIDs to the MS during diversity set update through MOB_BSHO-REQ message and MOB_BSHO-RSP message.

There are several conditions that are required to enable macro diversity handover between MS and a group of BSs. These conditions are listed as follows:

— The BSs involving in MDHO are synchronized based on a common time source.
— The frames sent by the BSs involving in MDHO at a given frame time arrive at the MS within the prefix interval.
— BSs involving in MDHO have synchronized frame structure.
— BSs involving in MDHO have the same frequency assignment.

— BSs involving in MDHO shall use the same set of CIDs for the connections that are established with the MS.
— The same MAC/PHY PDUs shall be sent by all the BSs involving in MDHO to the MS.
— BSs involved in MDHO are also required to share or transfer MAC context. Such context includes all information the MS and BS normally exchange during Network Entry, particularly authentication state, so that an MS authenticated/registered with one of BSs from diversity set BSs is automatically authenticated/registered with other BSs from the same diversity set. The context also includes a set of service flows and corresponding mapping to connections associated with MS, current authentication, and encryption keys associated with the connections.

6.3.21.3.2 FBSS decision and initiation

Support of FBSS is optional for both MS and BS.

For MS and BS that support FBSS, the MS and the BS shall maintain a list of BSs that are involved in FBSS with the MS. The list is called the diversity set. Among the BSs in the diversity set, an anchor BS is defined. Regular operation when MS is registered at a single BS is a particular case of FBSS with diversity set consisting of single BS, which in this case shall be the anchor BS. When operating in FBSS, the MS only communicates with the anchor BS for UL and DL messages including management and traffic connections. Transition from one anchor BS to another ("switching") is performed without invocation of HO procedure described in 6.3.21.2. Anchor update procedure is defined in 6.3.21.3.4.

The BS supporting FBSS shall broadcast the DCD message that includes the H_Add Threshold and H_Delete Threshold. These thresholds may be used by the FBSS capable MS to determine if MOB_MSHO-REQ should be sent to request changing Diversity Set. When mean CINR of an active BS in the current diversity set is less than H_Delete Threshold, the MS may send MOB_MSHO-REQ to request dropping this BS from the diversity set; when mean CINR of a neighbor BS is higher than H_Add Threshold, the MS may send MOB_MSHO-REQ to request adding this neighbor BS to the diversity set. In each case, Anchor BS responds with MOB_BSHO-RSP with updated Diversity Set.

After the MS completes the initial network entry, re-entry procedure or the handover procedure defined in 6.3.21.2, the BS automatically becomes an Anchor BS. Also, the Diversity Set is initialized and TEMP_BSID of the Anchor BS is set to zero. However, the TEMP_BSID and Diversity Set shall be maintained when Anchor BS switching defined in 6.3.21.3.4 occurs.

The process of Anchor BS update may begin with MOB_MSHO-REQ from MS or MOB_BSHOREQ from the Anchor BS. Acknowledgement of MOB_MSHO-REQ with MOB_BSHO-RSP is required. After MS transmits MOB_MSHO-REQ, MS shall not transmit any MOB_MSHO-REQ prior to expiration of timer MS_handover_retransmission_timer. The MS shall deactivate the timer MS_handover_retransmission_timer upon MS transmit of MOB_HO-IND or upon MS receipt of MOB_BSHO-RSP. The process of Anchor BS update may also begin with Anchor switching indication via fast-feedback channel.

If an MS that transmitted a MOB_MSHO-REQ message detects an incoming MOB_BSHO-REQ message, it shall ignore that MOB_BSHO-REQ message. A BS that transmitted a MOB_BSHO-REQ message and detects an incoming MOB_MSHO-REQ or MOB_HO-IND message from the same MS shall ignore its own previous request.

There are several conditions that are required to enable fast BS switching HO between MS and a group of BSs. These conditions are listed as follows:

— BSs involving in FBSS are synchronized based on a common time source.
— The frames sent by the BSs from diversity set arrive at the MS within the prefix interval.
— BSs involving in FBSS have synchronized frames.

— BSs involving in FBSS operate at same frequency channel.
— BSs involving in FBSS are also required to share or transfer MAC context. Such context includes all information MS and BS normally exchange during Network Entry, particularly authentication state, so that an MS authenticated/registered with one of BSs from diversity set BSs is automatically authenticated/registered with other BSs from the same diversity set. The context also includes a set of service flows and corresponding mapping to connections associated with MS, current authentication, and encryption keys associated with the connections.

6.3.21.3.3 Diversity set update for MDHO/FBSS

When MOB_MSHO-REQ is sent by an MS, the MS may provide a possible list of BSs to be included in the MS's diversity set. The MS may evaluate the possible list of BSs through the received MOB_NBR-ADV message, and previously performed signal strength measurement, propagation delay measurement, scanning, ranging, and association activity. When MOB_BSHO-RSP is sent by the anchor BS or BSs in the MS's current diversity set, the BSs may provide a list of BSs recommended for incorporation into the MS's diversity set.

When MOB_BSHO-REQ is sent by the anchor BS or BSs in the MS's current diversity set, the BSs may provide a recommended list of BSs to be included in the MS's diversity set. The criteria for the recommendation may be based on expected QoS performance to MS requirements and list of BSs that can be involved in MDHO/FBSS as broadcast in MOB_NBR-ADV.

MS actual update of diversity set is recommended, but not required. However, the actual diversity set chosen by the MS shall be a subset of those listed in MOB_BSHO-RSP or in MOB_BSHO-REQ and shall be indicated in MOB_HO-IND, with MDHOFBSS_IND_type field in MOB_HO-IND set to 0b00 (Confirm Diversity Set Update). The MS may reject the diversity set recommended by the anchor BS by setting the MDHOFBSS_IND_type field in MOB_HO-IND to 0b10 (Diversity Set Update Reject) and may include an MS preferred target BS to include in the MS's diversity set. The BS may reconfigure the diversity set list, including MS preferred target BS and retransmit MOB_BSHO-RSP message to the MS.

After an MS or BS has initiated a diversity set update using MOB_MSHO/BSHO-REQ, the MS may cancel the diversity set update at any time. The cancellation shall be made through transmission of a MOB_HO-IND with MDHOFBSS_IND_type field set to 0b01.

If the MS is operating in FBSS, when adding a new BS to the MS's diversity set, the MS may initiate ranging with newly added BS.

6.3.21.3.4 Anchor BS update for MDHO/FBSS

There are two mechanisms for the MS and BS to perform anchor BS update. The first mechanism is by using the HO messages. The second mechanism is by using the fast anchor BS selection feedback. The preferred anchor BSs shall be within the current diversity set of the MS. The MS may select the preferred anchor BS through the previously performed signal strength measurement. The BS decides the target anchor BS based on the MS report. MS and BS supporting MDHO or FBSS shall implement one of the two mechanisms to perform anchor BS update.

6.3.21.3.4.1 HO MAC management message method

For the method using MAC management message, the MS reports the preferred anchor BS by using the MOB_MSHO-REQ message. The BS informs the MS of the anchor BS update through MOB_BSHO-REQ or MOB_BSHO-RSP message with the estimated switching time. The MS shall update its anchor BS based on the information received in MOB_BSHO-REQ or MOB_BSHO-RSP. The MS also shall indicate its acceptance of the new anchor BS through MOB_HO-IND, with MDHOFBSS_IND_type field set to 0b00. The MS may reject the anchor BS update instruction by the BS, by setting the MDHOFBSS_IND_type field

in MOB_HO-IND to 0b10 (Anchor BS Update Reject) and may propose an alternate Anchor BS. The BS may reconfigure the anchor BS list and retransmit MOB_BSHO-RSP or MOB_BSHO-REQ message to the MS. After an MS or BS has initiated an anchor BS update using MOB_MSHO/BSHO-REQ, the MS may cancel anchor BS update at any time. The cancellation shall be made through transmission of a MOB_HO-IND with MDHOFBSS_IND_type field set to 0b01.

When switching to a new anchor BS within the MS's diversity set, the network entry procedures, as depicted in Figure 144, are not required and shall not be performed by the MS.

6.3.21.3.4.2 Fast anchor BS selection feedback mechanism

For MS and BS using the fast-feedback method to update Anchor BS, when the MS has more than one BS in its diversity set, the MS shall transmit fast anchor BS selection information to the current anchor BS using fast-feedback channel. If the MS needs to transmit anchor BS selection information, it transmits the codeword corresponding to the selected anchor BS via its fast-feedback channel. The codeword is identified by TEMP_BSID assigned to the BSs in a diversity set.

Fast-feedback channel shall be allocated by one of the following three methods:

a) Preallocated by MOB_BSHO-RSP or MOB_BSHO-REQ when a BS is added to the diversity set.
b) Allocated through Anchor_BS_switch_IE during anchor switching operation.
c) Allocated by UL-MAP of the new anchor BS after the switching period.

For FBSS operation, the time axis is slotted by an ASR (anchor switch reporting) slot that is M frame long. If the current frame number is N, then the ASR slot number shall be the integer quotient of N divided by M. The ASR slot shall start at the frame where frame number modulus M equals to zero. M shall be configured by the DCD. A switching period is introduced whose duration is equals to L ASR slots. L shall be configured by the DCD to be long enough so that certain processes (e.g., HARQ transmission, backhaul context transfer) can be completed at the current anchor BS before the MS switches to the new anchor BS.

The switching operation for L = 2 is illustrated in Figure 151. In the first ASR slot, the MS detects that the signal strength from a BS in the diversity set (e.g., BS B) is better than that of the current anchor BS (e.g., BS A) so that a switch to the new anchor BS is desired. The MS transmits the anchor BS switch indicator at the beginning of the next ASR slot. At the start of the second ASR slot, the MS shall start a switching timer with value equals to the switching period. Starting from the second ASR slot and for the subsequent ASR slots prior to the expiry of the switching timer, the MS shall transmit the anchor switch indicator through CQICH allocated by the current anchor BS (e.g., BS A).

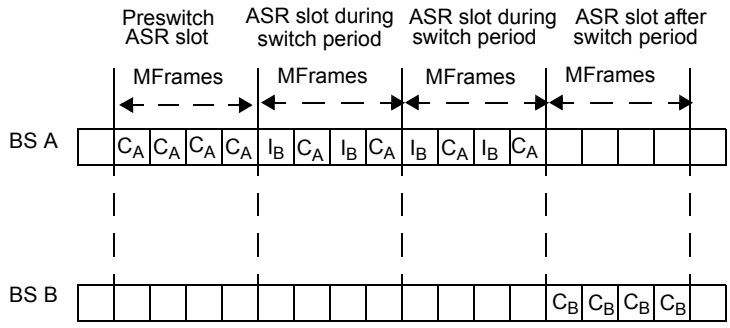

Figure 151—Fast anchor BS selection mechanism

The current anchor BS may send the Anchor_BS_switch_IE prior to the expiry of the switching timer to do one of the following:

— Acknowledge the MS's switch indication and/or assign a CQICH at the new anchor BS (BS B), and/or specify a new action time when the switch shall occur, and/or specify a new anchor BS to which to switch.
— Cancel the MS switching event.

If the MS does not receive an Anchor BS Switch IE prior to the expiry of the switching timer, the MS shall switch to the new anchor BS after the expiry of the switching timer. If the MS receives an Anchor BS Switch IE prior to the expiry of the switching timer with no cancellation and no new action time specified, the MS shall switch to the new anchor BS after the expiry of the switching timer. If the MS receives an Anchor BS Switch IE prior to the expiry of the switching timer with new action time specified, the MS shall switch to the new anchor BS at the action time specified. If the MS receives an Anchor BS Switch IE with cancellation prior to the expiry of the switching timer, the MS shall cancel the switching operation. If the MS successfully decodes an Anchor BS Switch IE, the MS shall acknowledge the reception of the IE using the allocated codeword over the CQICH.

Prior to the expiry of the switching timer, the MS shall report CQI of the current anchor BS (e.g., BS A) and anchor switch indication on alternate CQICH opportunities. The timing of the transmission for anchor switch indicator shall refer to the beginning of the switching period, and the anchor switch indicator shall be transmitted at the first CQICH opportunity. For example, the MS shall transmit the indicator at the frames of first and third CQICH opportunities within the switching period if the switching period has four CQICH opportunities indicated by CQICH_allocation_IE. If the MS started the switching operation by indicating a BS within the diversity set (e.g., BS B) as the new anchor BS, the MS shall not indicate another new anchor BS prior to the expiry of the switching timer. Prior to the expiry of the switching timer, if the MS has intention to cancel the switching due to factors such as the signal strength of the new anchor BS (e.g., BS B) is no longer higher than that of the current anchor BS (e.g., BS A) by a certain threshold, the MS shall continue to indicate BS B in the CQICH during the switching period. However, the MS can initiate the cancellation of the anchor BS switch if, and only if, no Anchor_BS_Switch_IE with cancellation flag disabled is received prior to the expiry of the switching timer. In such case, after the expiry of the switching timer, the MS shall stay with BS A and shall transmit the CQI on the same CQICH allocated by BS A in the same fashion as prior to the switch operation starts. On the BS side, after the expiry of the switching timer, the BS A shall continue to monitor the same CQICH allocated to the MS for an implementation dependent duration. If CQI transmission is detected, the BS A shall assume that the MS has cancelled the switch. The MS shall not initiate cancellation of the switch if Anchor_BS_Switch_IE with cancellation flag disabled is received prior to the expiry of the switching timer.

If no cancellation occurs, after the expiry of the switching timer, the MS shall switch to the new anchor BS (e.g., BS B) and monitor the DL of BS B. If the BS B has already preallocated a CQICH to the MS (this can be done using MOB_BSHO-RSP or Anchor Switch IE), the MS reports the CQI using the allocated CQICH and may begin the normal communication with the new anchor BS (e.g., BS B) starting from the first frame after the expiry of the switching timer. If CQICH is not preallocated to the MS prior to the switch, the MS shall monitor the MAP from the new anchor BS (e.g., BS B) and wait for the CQICH allocation after the switch. If after the switch, the MS does not receive a CQICH allocation, the MS requests the new anchor BS (e.g., BS B) to allocate CQICH channel by transmitting CQICH allocation request header. If the new anchor BS (e.g., BS B) receives CQICH allocation request header, the BS shall allocate a CQICH for the MS.

If MDHO support is negotiated, the BS may assign UL resource to the MS to send combined CQI of active BSs using the feedback header. The BS may also assign fast-feedback channel or enhanced fast-feedback channel for CQI feedback. When such a channel is assigned, the MS shall report the CQI of the anchor BS on the channel.

6.3.21.3.5 MS-assisted coordination of DL transmission at new anchor BS

The following procedure shall only be supported for FBSS.

Once the MS has successfully switched to the new anchor BS, to maintain continuity of transmission to the MS between the old and new anchor BSs, the last successfully received information unit needs to be identified to the new anchor BS. Depending on whether the connection is ARQ-enabled or ARQ-disabled, the identity of the next information unit can be given by the ARQ block sequence number or the MAC SDU sequence number respectively.

MS can optionally support the feedback of ARQ block sequence number or the virtual MAC SDU sequence number after the MS has successfully switched to the new anchor BS. The capability and the support for each connection are defined in the REG-REQ/RSP and DSA-REQ/RSP TLVs respectively.

For the connections that have SN feedback enabled, the following procedures shall be performed by the BS and the MS:

— For ARQ-disabled with SN feedback enabled, the BS shall include a SDU SN extended subheader at least once every 2^p MAC PDUs, where p is specified in the MAC header and extended subheader support TLV (11.7.21). Upon receiving anchor BS switching request from the MS, the old anchor BS shall include SDU SN extended subheader in MAC PDU at least once before the expiration of the switching timer. The MS shall maintain MAC SDU sequence number based on the information received from the BS. When the MS receives a MAC PDU without SDU SN extended subheader, the MS shall increment the MAC SDU sequence number by one for every SDU received. When the MS receives MAC SDU sequence number from the BS, it shall reset the MAC SDU sequence number based on the value included in SDU SN extended subheader.

— At the expiration of the anchor switch timer, the new anchor BS should assign UL resource through UL-MAP IE for the MS to transmit the sequence number(s) of ARQ block or virtual MAC SDU on the SN report MAC header (6.3.2.1.6). At the expiration of the anchor switch timer, the MS shall send SN report MAC headers (as described in 6.3.2.1.2.1.7) that include the next ARQ Block (or virtual MAC SDU) sequence number that it is expecting for each of its connections that have SN feedback enabled. The new anchor BS may send the SN request extended subheader to explicitly request an MS to send additional SN report header. After receiving the SN request extended subheader, the MS shall send the requested SN report header. The new anchor BS may assign UL resource through UL-MAP IE for the MS to send the additional SN report header.

— Once the HO to the new anchor BS has been completed, acknowledgement and/or retransmission of any outstanding ARQ blocks is handled per the ARQ mechanism defined in 6.3.4.

6.3.22 Multicast and broadcast service (MBS)

Multicast and Broadcast Services provides an efficient method for concurrent transport of data common to a group of users, using a common multicast CID. MBS service is offered in the downlink only and may be coordinated and optionally synchronized among a group of BS to allow macro-diversity.

The service flows associated with MBS have certain QoS parameters and may require encryption performed using a globally defined sequence of TEKs. Since a multicast connection is associated with a service flow, it is associated with the QoS and traffic parameters for that service flow. All service flows to transmit the same MBS flows, created on any SS, shall have the same service flow management encodings for QoS parameter set (11.13.4).

Service flows to carry MBS data are instantiated on individual SS participating in the service while in Normal Operation. During such instantiation the SS learns the parameters that identify the service and associated service flows. Each BS capable of providing MBS service belongs to a certain MBS Zone,

defined as a set of BS where the same CID and same SA is used for transmitting the content of certain service flow(s). Each MBS Zone is identified by a unique MBS_Zone ID.

To ensure proper multicast operation on networks of BS employing MBS, the CIDs used for common MBS content and service shall be the same for all BS within the same MBS-Zone. This allows the SS which has already registered with a service to be seamlessly synchronized with MBS transmissions within an MBS_Zone without communicating in the UL or re-registering with other BS within that MBS-Zone. The MBS_Zone ID's shall not be reused across any two adjacent MBS zones.

ARQ and HARQ are not applicable to multicast connections as there is no feedback from the SS at layer 1 or layer 2. However MBS may be used with time-diversity similar to that used in HARQ transmissions, where some HARQ parameters are used for MBS bursts to allow proper sequencing and time diversity combining when MBS bursts are repeatedly transmitted, but without any layer 1 or layer 2 acknowledgements from the SS.

Logical Channel IDs, which pairs with Multicast CID in the Extended MBS DATA IE, is allocated to each MBS Contents ID value in the order that it is included in the MBS Contents IDs TLV (11.13.35). As a result, an SS can receive multiple MBS messages for an MBS connection with different MBS contents distinguished by Logical Channel ID belonging to a Multicast CID. The BS shall allocate MBS SDUs in the order defined in the Extended MBS DATA IE.

If a DL multicast connection is to be encrypted, each SS participating in the connection shall have an additional security association (SA) allowing that connection to be encrypted using keys that are independent of those used for other encrypted transmissions between the SS and the BS.

Multicast and broadcast service flows may be encrypted at the application layer or MAC or both. Upper layer encryption may be employed to prevent non-authorized access to multicast and broadcast content. MBS may provide access control against theft of service by data encryption based on advanced encryption standard with counter mode encryption (AES-CTR) defined in NIST Special Publication 800-38A and FIPS 197. Details of MBS security are defined in 7.8.3.

For all BSs that belong to the same MBS Zone, the following coordination shall be assured:

— The set of MAC SDUs carrying MBS content shall be identical in the same frame in all BS in the same MBS zone;
— The mapping of MAC SDUs carrying MBS content onto MAC PDUs shall be identical in the same frame in all BS in the same MBS Zone, meaning, in particular, identical SDU fragments and identical fragment sequence number (block sequence number) and fragment size

Coordination in the MBS Zone assures that the SS may continue to receive MBS transmissions from any BS that is part of the MBS Zone, regardless of the SS operating mode—Normal Operation, Idle Mode—without need for the SS to register to the BS from which it receives the transmission.

In addition to coordination, MBS transmissions may optionally be synchronized across all BS's within an MBS Zone. This option enables an SS to receive the multicast or broadcast transmission from multiple BS using macrodiversity, and thereby improve the reliability of reception. When macrodiversity is used, the mapping of SDUs into the MBS Bursts is identical, and the same MBS bursts are transmitted at the same time in all involved BS; additional parameters may also be required to be identical across BSs if macrodiversity is used, see 6.3.22.2.

A BS may provide the SS with MBS content locally within its coverage and independently of other BSs. The single BS provision of MBS is therefore a configuration where an MBS Zone is configured to consist of one BS only. This configuration may be provided as one of the possible cases of MBS. In this case, the BS may

use any multicast CID value for providing the MBS service, independently of other BSs, so the SS receives the MBS data from its serving BS, and the SS should not expect the service flow for this MBS connection to continue should the SS leave the serving BS. However, if the MS moves to a BS that is transmitting the same MBS flows in another MBS Zone and updates its Service Flow management encodings (6.3.22.1.1), the MS may continue to receive the same MBS flows.

6.3.22.1 Establishment and maintenance of MBSs

Establishment of MBSs for a specific SS with respect to certain service flow is always performed when the SS is in Normal Operation with a serving BS. MBSs are associated with multicast and broadcast service flows. Multicast and broadcast service flows are not dedicated to the specific SS and are maintained even though the SS is either in awake/sleep mode or in the idle mode. When an SS is registered at a BS for receiving MBS, multicast and broadcast service flows shall be instantiated as multicast connections. Data of multicast and broadcast service flows may be transmitted from BS and received at SS also regardless of what mode the SS is currently in. The BS may establish a DL MBS by creating a multicast and broadcast service flows when the service commences. Mapping of multicast and broadcast SFIDs to CIDs shall be known to all BSs belonging to the same MBS zone. The method of making all BS in the same MBS Zone aware of MBS flows and associated MBS Service Flows—including multicast CID assignment, QoS parameter set, and Classification Rule(s)—is outside the scope of the standard. As the classification and transmission of MBS flows may be supported on a BS in an MBS Zone regardless of the presence or absence of any SS in Normal Operation receiving the service, the BS may retain MBS service flow management encodings sufficient to do classification and scheduling of received MBS flows, even when no SS in Normal Operation receiving the service is registered at the BS.

When the SS registers at the BS for receiving multicast and broadcast services, the BS or SS may initiate the DSA procedure with respect to multicast and broadcast connections. Such knowledge may be used to initiate bidirectional upper layers communication between the SS and the network for the purpose of configuration of multicast/broadcast service. After successful configuration, the SS shall reuse the same configuration when it moves to another BS without re-configuration.

During communication to the BS the SS may learn the MBS_Zone ID. The SS may continue to receive MBS transmissions from any BS that is part of the MBS Zone, regardless of the SS operating mode—Normal Operation, Idle Mode—without need for update to any service flow management encoding for the MBS flow.

Should the SS transit to a new MBS Zone while in Normal Operation, and provided that SS MBS service flow management encodings have not otherwise been updated using the method provided in 6.3.22.1.1, as part of the handover the BS may include CID_Update in REG-RSP encoding TLV in the RNG-RSP to provide updated service flow management encodings for any affected MBS flow.

When an SS in Idle mode migrates to a BS advertising another MBS_Zone, the SS is expected to update the MBS service flow management encodings at that BS to provide for further reception of MBS content. Such an update may include one or more of multicast CIDs, Target SAID parameters, Packet Classification Rule parameters, MBS Zone Identifier Assignment parameter, and MBS Content IDs. If the SS has not received such information from the serving MBS_Zone as described in 6.3.22.1.1, the SS may conduct location update to acquire updated MBS service flow management encodings, or may conduct re-entry from Idle mode. The BS may include CID_Update in REG-RSP encoding TLV in the RNG-RSP to provide updated service flow management encodings for any affected MBS flow.

During a Dynamic Service Addition procedure, the BS may include the MBS contents IDs TLV (11.13.35) in the DSA-REQ or DSA-RSP message to establish an MBS service flow for multiple MBS contents. The BS may include MBS Contents Identifier TLV in DSA-REQ/RSP to establish an MBS connection with multiple MBS contents.

The SS shall not include the MBS_Zone ID or MBS contents IDs in a DSA-REQ message.

6.3.22.1.1 Inter-MBS Zone transition

To allow seamless transition from one MBS Zone to another without any interruption of MBS data service and operation, the MS should update MBS service flow management encodings including multicast CID, Target SAID parameter, Packet Classification Rule parameter(s), MBS Zone Identifier Assignment parameter, and MBS contents IDs. If the SS has no MCID information regarding the new MBS Zone, then the SS is required to acquire MCID context through the other procedures, e.g., location-update, handover, or network-entry.

If the SS has an indication that the MCID has no continuity in the target MBS zone then the SS shall delete the MCID and MBS Zone Identifier Assignment related to the MCID.

6.3.22.2 Performance enhancement with macro diversity

Multiple BS's participating in the same multi-BS-MBS service MAY be time and frequency synchronized in the transmissions of common MBS data to allow macro diversity gain at the SS. When macro-diversity is enabled the MBS bursts positions and dimensions as well as PHY parameters shall be the same across all BS's within the same MBS Zone. In addition to the coordination parameters identified in 6.3.22.1, macro-diversity synchronization requires that all BS's within the same MBS Zone shall use the same

— DUIC parameters associated with each MBS Burst including FEC Type, Modulation Type, and Repetition Coding
— Mapping of SDUs to PDU (order of the SDUs and fragments) including Sub Headers
— Mapping of PDUs to bursts
— Order of bursts in the zone/region
— MAP construction

The way that multiple BSs accomplish the synchronized transmission (which implies performing functions like classification, fragmentation, scheduling at a centralized point called the MBS Server) is outside the scope of the standard.

6.3.22.3 Power saving operation

To facilitate power efficient reception of MBS data, an MBS MAP IE may be placed in the DL-MAP to point to the location of a dedicated MBS region allocation in the DL subframe. The purpose of this IE is to do the initial direction of the SS to the MBS allocation, and to redirect any SS that has lost synchronization with MBS allocations back to the next MBS allocation.

6.3.22.4 Multicast and broadcast zone (MBS_Zone)

Different CIDs or different SAs may be used in different service areas for the same multicast and broadcast service flow. A multicast and broadcast zone identifier (MBS_ZONE_ID) is used to indicate a service area through which a CID and SA for a broadcast and multicast service flow are valid. A BS that supports Multi-BS Access MBS shall include the MBS zone identifier(s) as a MBS zone identifier list in the DCD message (see Table 575). The MBS zone identifier shall not be '0'.

When the MBS zone identifier list appears in DCD settings TLV in MOB_NBR-ADV message with only one value of '0', then the neighbor BS is not affiliated with any MBS zone. An MBS zone that is adjacent to another MBS zone is a neighbor MBS zone to that MBS zone.

In case BS sends DSA for establishment of connection for MBS, MBS_ZONE shall be encoded in the DSA message (see 11.13.27). If an SS in idle mode moves into BSs in the same MBS zone, the SS does not have to re-enter the network to re-establish a connection or a connection defined by MBS Contents Identifier to monitor the multicast and broadcast service flow. However, if an SS moves into a different MBS zone, the SS may need to update service flow management encodings for the multicast and broadcast service flow. One BS may have multiple MBS zone IDs for different MBS services.

6.3.23 MS idle mode (optional)

Idle mode is intended as a mechanism to allow the MS to become periodically available for DL broadcast traffic messaging without registration at a specific BS as the MS traverses an air link environment populated by multiple BSs, typically over a large geographic area. Idle mode benefits MS by removing the active requirement for HO, and all normal operation requirements. By restricting MS activity to scanning at discrete intervals, idle mode allows the MS to conserve power and operational resources.

Idle mode benefits the network and BS by providing a simple and timely method for alerting the MS to pending DL traffic directed toward the MS, and by eliminating air interface and network HO traffic from essentially inactive MS.

The BSs are divided into logical groups called paging groups. The purpose of these groups is to offer a contiguous coverage region in which the MS does not need to transmit in the UL, yet can be paged in the DL if there is traffic targeted at it. The paging groups should be large enough so that most MSs will remain within the same paging group most of the time and small enough so that the paging overhead is reasonable. Figure 152 shows an example of four paging groups defined over multiple BS arranged in a hexagonal grid. A BS may be a member of one or more Paging Groups comprised of differing groupings of BS, of varying cycles and offsets, providing support for not only the geographic requirements of Idle Mode operation but may also support differentiated and dynamic quality of service requirements and scalable load-balancing distribution.

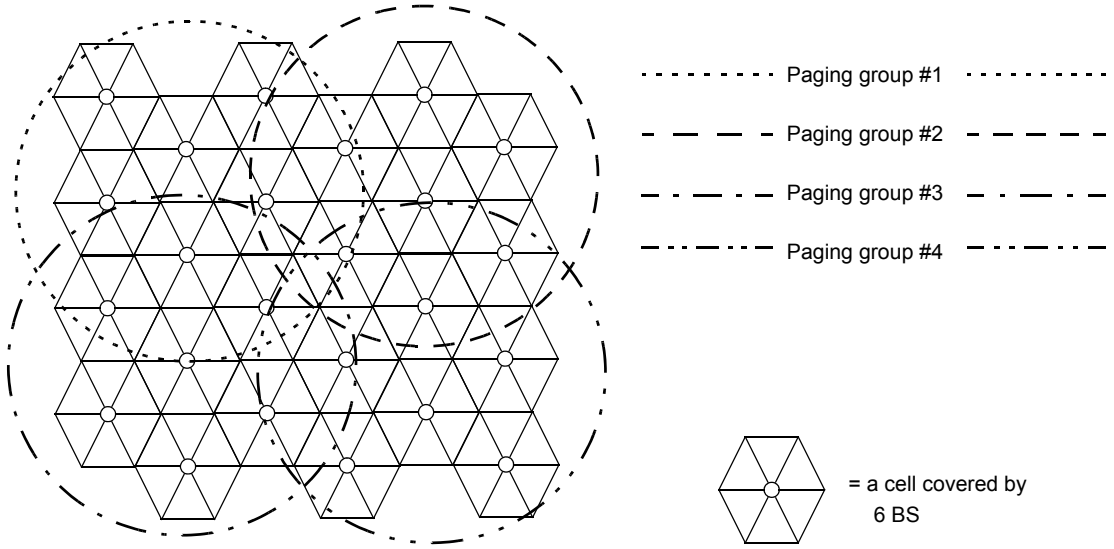

Figure 152—Paging groups example

The paging-groups are defined in the management system.

Idle comprises the following activities/stages:

— MS idle mode initiation
— Cell selection
— MS Broadcast Paging message time synchronization
— MS paging unavailable interval
— MS paging listening interval
— BS paging interval
— BS Broadcast Paging message
— Paging availability mode termination

6.3.23.1 MS idle mode initiation

Idle mode initiation may begin after MS deregistration. During normal operation with its serving BS, an MS may signal intent to begin idle mode by sending a DREG-REQ message with the De-registration_Request_Code parameter = 0x01; request for MS deregistration from serving BS and initiation of MS idle mode. When the BS decides to reject MS-initiated idle mode request, the BS shall send a DREG-CMD with action code 0x06 in response to this DREG-REQ message. The BS may include REQ-Duration TLV in this DREG-CMD message. In this case, the MS may retransmit the DREG-REQ message after the expiration of REQ_Duration. If the MS does not receive the DREG-CMD message within T45 timer expiry after it sends the DREG-REQ message to the BS, the MS shall retransmit the DREG-REQ message as long as DREG Request Retry Count has not been exhausted. Otherwise, the MS shall reinitialize MAC. Also, the BS shall start Management_Resource_Holding_Timer to maintain connection information with the MS as soon as it sends the DREG-CMD message to the MS. If Management_Resource_Holding_Timer has been expired, the BS shall release connection information with the MS.

Similarly, a serving BS may signal for an MS to begin idle mode by sending a DREG-CMD message with action code 0x05 in unsolicited manner. This unsolicited DREG-CMD may include the REQ-Duration TLV. When an MS receives an unsolicited DREG-CMD without the REQ_Duration TLV, the MS shall immediately send a DREG-REQ message. In this case of BS-initiated idle mode, the serving BS shall start the T46 timer as well as Management_Resource_Holding_Timer at the same time. If the BS does not receive the DREG-REQ message with the De-registration_Request_Code parameter = 0x02 from the MS in response to the unsolicited DREG-CMD message with action code 0x05 within T46 timer expiry, the BS shall retransmit the DREG-CMD message with action code 0x05 in unsolicited manner as long as DREG command retry count has not been exhausted. MS shall enter idle mode after it sends DREG-REQ message with the De-Registration_Request Code parameter = 0x02 in response to the unsolicited DREG-CMD message with action code 0x05.

As another case of BS initiated Idle Mode, the serving BS may also include a REQ-duration TLV with an Action Code = 0x05 in the DREG-CMD, signaling for an MS to initiate an Idle Mode request through a DREG-REQ with De-Registration_Request Code = 0x01, request for MS De-Registration from serving BS and initiation of MS Idle Mode, at REQ-duration expiration. In this case, BS shall not start T46 timer. MS may include Idle Mode Retain Information TLV with in DREG-REQ message with De-Registration_Request Code = 0x01 transmitted at the REQ-duration expiration. In this case, BS shall transmit another DREG-CMD message with Action Code=0x05 including Idle Mode Retain Information TLV.

MS may reject the unsolicited Idle Mode request from BS when MS has a pending UL data. For this, MS shall send DREG-REQ with De-Registration_Request Code = 0x03 in response to the unsolicited DREG-CMD with an Action Code = 0x05. Upon receiving DREG-REQ with De-Registration_Request Code = 0x03, BS shall stop T46 timer and Management Resource Holding Timer and resume all connection information for MS.

At the expiration of T46 timer due to no reception of DREG-REQ message. BS shall retransmit the unsolicited DREG-CMD message, reset Management_Resource_Holding_Timer, and increment DREG Command Retry Count. These operations may go on until BS receives the DREG-REQ message from MS. If DREG Command Retry Count is exhausted, BS shall does not retransmit DREG-CMD message any more. On the contrary, if BS receives DREG-REQ message with the De-Registation_Request_Code parameter = 0x02 as long as DREG Command Retry Count is not exhausted, BS regards MS as entering idle mode normally and deletes the MS's connection information at expiration of management resource holding timer.

For MS terminating normal operation with the serving BS and entering idle mode, the paging controller, i.e., the serving BS or other network entity administering idle mode activity for the MS, may retain certain MS service and operational information useful for expediting a future MS network reentry from idle mode. The MS may request the paging controller (refer to subclause 11.1.8.2) to retain specific MS service and operational information for idle mode management purposes through inclusion of the Idle Mode Retain Information element in the DREG-REQ management message. While retained MS service and operational information may include service flow management encodings definitions as per 6.3.14 and 11.13, retained information shall not include service flow CID values of unicast transport CIDs. Retained information shall include service flow CID values of Multicast CIDs for multi-BS-MBS flows. Retained information shall not include management CIDs.The serving BS shall report the likely effect on expedited future MS network reentry due to paging controller retention of MS service and operational context by reporting the indicative Idle Mode Retain Information element in a DREG-CMD message. Similarly, the BS may also include Idle Mode Retain Information element in the unsolicited DREG-CMD message.

The MS shall maintain an idle mode timer and paging controller shall maintain an idle mode system timer to provide an interval timer to prompt MS idle mode location update activity and demonstrate MS continued network presence to revalidate paging controller retention of MS service and operational information. Idle mode timer and idle mode system timer shall start on serving BS transmission of DREG-CMD message directing MS transition to idle mode. Idle mode timer and idle mode system timer shall recycle on any successful MS network idle mode location update. On expiration of idle mode system timer or on MS network entry/reentry and resumption of normal operation, the paging controller shall discard all MS service and operational information retained for idle mode management purposes. On expiration of idle mode timer, the MS shall consider that paging controller has discarded all MS service and operational information retained for idle mode management purposes. If the MS intends to retain the MS service and operational information, the MS should avoid idle mode timer and idle mode system timer expiration, by performing location update operation sufficiently ahead of the time expiration of the idle mode timer and idle mode system timer.

When MS enters idle mode, ARQ state information and parameters between MS and BS are removed and ARQ is reset when connection is setup during network reentry after idle mode.

The MS may request BS inclusion of MS MAC address hash in MOB_PAG-ADV message at regular intervals, regardless of need for notification, by including the MAC Hash Skip Threshold TLV (11.1.8.1) in a DREG-REQ message with action code 0x01. The value of MAC Hash Skip Threshold TLV specifies the maximum number of successive MOB_PAG-ADV messages that may be sent from a BS without individual notification for an MS, including MAC address hash of an MS for which the action code is 00 (No Action Required). Provided the BS approves the MS deregistration with initiation of idle mode and elects the MAC Hash Skip Threshold function, the BS shall respond by sending DREG-CMD message with action code 0x05 and including the MAC Hash Skip Threshold TLV.

6.3.23.2 Cell selection

At MS idle mode initiation, an MS may engage in cell selection to obtain a new preferred BS. A preferred BS is a BS that the MS evaluates and selects as the BS with the best air interface DL properties, which may

include the RSSI, CINR, cell type and the available radio resources, etc. The preferred BS may be the MS's previous serving BS. In all other respects, cell selection is similar to 6.3.21.2.1.

6.3.23.3 MS Broadcast Paging message time synchronization

At evaluation and selection of the preferred BS, the MS shall synchronize and decode the DCD and DL-MAP for the preferred BS, extracting the frame size and frame number. The MS shall evaluate the frame size and frame number and use them to determine time until next regular BS paging interval for the preferred BS. The calculated time until the next regular BS paging interval, less any MS DL scanning, decoding, and synchronization time requirements, shall be the MS paging unavailable interval.

6.3.23.4 MS paging unavailable interval

During MS paging unavailable interval, the MS may power down, scan neighbor BSs, reselect a preferred BS, conduct ranging, or perform other activities for which the MS will not guarantee availability to any BS for DL traffic. Should the MS reselect a preferred BS during the MS paging unavailable interval, then the MS shall return to the MS Broadcast Paging message time synchronization stage.

6.3.23.5 MS paging listening interval

The MS shall scan, decode the DCD and DL-MAP, and synchronize on the DL for the preferred BS in time for the MS to begin decoding any BS Broadcast Paging message during the entire BS paging interval. At the end of MS paging listening interval, providing that the MS does not elect to terminate the MS idle mode, the MS may return to MS paging unavailable interval.

If the BS transmits the Broadcast Control Pointer IE, the MS shall read and react to this message as follows:

a) If the DCD Count in DL MAP and/or UCD Count in UL MAP is different from Configuration Change Count of which DCD and/or UCD MS retains, even if scheduled to be in a paging unavailable interval the MS shall awaken at DCD_UCD Transmission Frame in time to synchronize to the DL and decode the DCD and UCD message in the frame, if present. If the MS fails to decode one or both of DCD and UCD, or no DCD or UCD was transmitted by the BS, the MS shall continue decoding all subsequent frames until it has acquired both updated DCD and UCD. Upon successful completion of DCD and UCD decoding, the MS shall immediately return to regular Idle Mode operation.
b) If Skip Broadcast_System_Update is set to 0, even if scheduled to be in a paging unavailable interval, the MS shall awaken at Broadcast_System_Update_Transmission_Frame in time to synchronize to the DL and decode the DL-MAP and any message, if present. Upon completion, the MS shall immediately return to regular idle mode operation.

A BS paging interval shall occur during the N frames beginning with the frame whose frame number, N_{frame}, meets the condition

$$N_{frame} \text{ modulo PAGING\_CYCLE} == \text{PAGING\_OFFSET}$$

on each BS, where N is Paging Interval Length. A BS shall broadcast at least one, but may broadcast more than one BS Broadcast Paging messages during the MS Paging Listening Interval. Different BSs may synchronize their MS Paging Listening Intervals.

6.3.23.6 BS Broadcast Paging message

A BS Broadcast Paging message is an MS notification message indicating either the presence of DL traffic pending, through the BS or some network entity, for the specified MS or to poll the MS and request a location update without requiring a full network entry. The BS Broadcast Paging message shall be sent on

the Broadcast CID or Idle Mode Multicast CID (defined in Table 558 in 10.4) during the BS paging interval. A Broadcast Paging message shall be transmitted during the MS Paging Listening Interval in order to advertise the BS supported Paging Groups, regardless of any requirement for notification of an MS, and even without notification of any MS.

The BS Broadcast Paging message shall include one or more Paging Group IDs identifying the logical affiliations of the transmitting BS.

MSs are identified in the BS Broadcast Paging message by their MS MAC address hash. A single BS Broadcast Paging message may include multiple MAC Addresses. For a given BS Broadcast Paging message in a specific BS paging interval, the BS shall include only those MS MAC address hash particular to the Paging Interval Length, frame number, PAGING_CYCLE, and PAGING_OFFSET (see 6.3.23.5).

The BS Broadcast Paging message shall also include an action code directing each MS notified via the inclusion of its MS MAC address hash as appropriate:

0b00: No action required
0b01: Perform ranging to establish location and acknowledge message
0b10: Perform initial network entry
0b11: *Reserved*

When MAC Hash Skip Threshold (11.1.8.1) set to 0xFF is included in DREG-CMD message at MS idle mode initiation, MAC Address Hash of an MS shall be omitted in every MOB_PAG-ADV message for which the MS need not be paged, and as would result in MOB_PAG-ADV notification of the MS with action code 0b00 (No Action Required). MS shall maintain an MS MAC Hash Skip Counter and BS shall independently maintain a BS MAC Hash Skip Counter for count of successive MOB_PAG-ADV messages that omit individual MS MAC address hash and any action code. BS shall maintain one such respective BS MAC Hash Skip Counter for each MS idle mode initiation and for which BS is currently serving as preferred BS. MS and BS shall reset their respective MAC Hash Skip Counter when BS transmits MOB_PAG-ADV including MS MAC address hash and action code.

After transmitting the Broadcast Paging message with action code 0b01 (Perform Ranging) or 0b10 (Enter Network), if the BS does not receive RNG-REQ from the MS paged until the next MS paging listening interval, the BS shall retransmit the Broadcast Paging message. Every time the BS retransmits the Broadcast Paging message, it decreases the predefined Paging Retry Count by one. If the BS does not receive RNG-REQ from the MS until the Paging Retry Count decreases to zero, the BS determines that the MS is unavailable, and shall send a message over the backbone network to indicate that the list of MSs in idle mode shall be updated in all BSs that belong to the same paging group.

For a BS Broadcast Paging message to be transmitted to indicate the presence of DL traffic pending, there shall be at least a packet in the DL traffic whose Paging Preference indicates paging generation.

6.3.23.7 Paging availability mode termination

Idle mode may only be terminated through

— MS reentry to the network
— Paging controller detection of MS unavailability through repeated, unanswered paging messages
— Expiration of the idle mode system timer

6.3.23.7.1 MS side

An MS may terminate MS idle mode at any time.

An MS shall terminate idle mode and reenter the network if it decodes a BS Broadcast Paging message that contains the MS own MS MAC address hash and action code 0b10 (Enter Network). In the event that an MS decodes a BS Broadcast Paging message that contains the MS own MS MAC address hash and action code 0b01 (Perform Ranging), the MS shall conduct and complete idle mode location update to establish location to the network and acknowledge message decoding. In both cases for the OFDMA PHY, if a PHY-specific ranging code and transmission opportunity is assigned to the MS in the MOB_PAG-ADV message, the MS shall perform network reentry or idle mode location update by transmitting the code at the transmission opportunity assigned in the MOB_PAG-ADV message on the dedicated ranging region assigned in the UL-MAP IE (UIUC = 12 and dedicated ranging indicator bit set to 1).

The procedure for PHY-specific ranging code operation is described as follows:

— After receiving the MOB_PAG-ADV and within the Page-Response window, the MS shall transmit the assigned ranging code at the transmission opportunity in the frames where dedicated ranging regions are assigned in the UL-MAP IE (UIUC = 12 and dedicated ranging indicator bit set to 1). The assigned ranging code transmission can be terminated early if the MS receives a RNG-RSP message with Success status before the end of the Page-Response window.
— In the case where RNG-RSP message with Continue status is received and within the Page-Response window, the MS shall transmit the assigned ranging code at the transmission opportunity in the next frame where the dedicated ranging region is assigned.
— In the case where RNG-RSP message with Success status is not received within the Page-Response window, the MS shall continue with the normal initial ranging procedure for network reentry from idle mode (6.3.22.10) or idle mode location update (6.3.23.8.2).
— In the case where no RNG-RSP message is received or no dedicated ranging region is assigned within the Page-Response window to the MS, the MS shall continue with the normal initial ranging procedure for network reentry from idle mode (6.3.23.9) or idle mode location update (6.3.23.8.2).
— In all other cases, the MS shall use normal network reentry or idle mode location update procedure, as described in 6.3.23.8.2

To prevent collisions from multiple MSs trying to wake from idle mode at the same time, the MS shall use random backoff with the Initial_ranging_backoff_start and Initial_ranging_backoff_end described in Table 571.

When the MS decodes a BS Broadcast Paging message that does not include its MAC Address Hash, it means that the MS is not being paged in the current Broadcast Paging event. For all BS Broadcast Paging messages that the MS decodes during the MS Paging Listening Interval, if no message includes the MAC Address Hash of the MS then the MS may enter its next MS Paging Unavailable Interval.

6.3.23.7.2 BS side

The BS at which the MS reentered the network shall inform the appropriate element in the network of the reentry of the MS. The means by which the BS accomplishes this is outside the scope of this standard.

6.3.23.8 Location update

Location update comprises condition evaluation and update processing.

6.3.23.8.1 Location update conditions

An MS in idle mode shall perform a location update process operation if any location update condition is met. There are five location update evaluation conditions: paging group update, timer update, power down update, MAC hash skip threshold update and MBS update. MS may also perform location update process at will. When an MS performs location update, the MS may include Paging Cycle Change (see 11.5) in RNG-REQ to change Paging Cycle. A BS may also change MS's Paging Cycle by requesting MS to perform

location update via MOB_PAG-ADV with Action code = 0b01 (i.e., Perform ranging to establish location). Whether MS has requested or BS has initiated, the BS shall include appropriate Paging Information (see 11.1.8.3) in RNG-RSP, in response to RNG-REQ message including Paging_Cycle_Change TLV sent by MS during Location Update.

6.3.23.8.1.1 Paging group update

The MS shall perform the Location Update process when the MS detects a change in paging group. The MS shall detect the change of paging group by monitoring the paging group identifiers, Paging Group IDs, which are transmitted by the Preferred BS in the DCD message or MOB_PAG-ADV broadcast message during the MS Paging Listening Interval. If the Paging Group IDs detected do not include the Paging Group to which the MS belongs, the MS shall determine that the paging group has changed.

6.3.23.8.1.2 Timer update

The MS shall periodically perform location update process prior to the expiration of the idle mode timer.

6.3.23.8.1.3 Power down update

The MS shall attempt to complete a location update once as part of its orderly power down procedure. This mechanism enables the paging controller to update the MS's exact status and to delete all information for the MS and discontinue idle mode paging control for the MS at the time of power down. At the time of successful power down location update, the paging controller shall release all idle mode retaining information related to the MS. In case of failure of power down information update, the paging controller shall perform availability check using location update polling. Unavailability of MS shall be determined and the paging controller shall delete all idle mode retaining information if the MS does not answer for the BS's location update polling up to "Paging Retry Count."

6.3.23.8.1.4 MAC hash skip threshold update

The MS shall perform location update process when the MS MAC hash skip counter exceeds the MAC hash skip threshold (11.1.8.1) successively. After successful location update, the BS and MS shall reinitialize their respective MAC hash skip counters.

6.3.23.8.1.5 MBS update

An MS in idle mode with one or more multi-BS MBS service flows shall perform a location update process when the MS detects a change in MBS Zone unless the MS already has the MCID mappings in the target MBS zone. The Service Flow CID encoding of MCID for MBS flows may be updated in a method outside of this standard. The MS shall detect the change of MBS Zone by monitoring the MBS zone identifier list which is transmitted by the Preferred BS in the DCD message. If the MBS zone identifier list detected does not include the MBS zone identifiers for all multi-BS-MBS flows to which the MS belongs, the MS shall determine that the MBS Zone has changed.

6.3.23.8.2 Location update process

If an MS in idle mode determines or elects to update its location, depending on the security association the MS shares with the target BS, the MS shall use one of two processes: secure location update process or unsecure location update process. For purposes of location update process, the target BS shall be the preferred BS.

6.3.23.8.2.1 Secure location update process

If the MS shares a valid security context with the target BS so that the MS may include a valid HMAC/CMAC Tuple in the RNG-REQ, then the MS shall conduct initial ranging with the target BS by sending a RNG-REQ including Ranging Purpose Indication TLV with Bit 1 set to 1, Location Update Request and Paging Controller ID TLVs (11.1.8.2) and HMAC/CMAC Tuple. If location update is used when an idle MS with one or more multi-BS MBS service flows enters a new MBS Zone, then the MS shall also set bit 4 of Ranging Purpose Indication TLV in RNG-REQ to a value of '1'. If the target BS evaluates the HMAC/CMAC Tuple as valid and can supply a corresponding authenticating HMAC/CMAC Tuple, then the target BS shall reply with a RNG-RSP including the Location Update Response TLV and HMAC/CMAC Tuple completing the location update process. If the paging group has changed, then target BS shall include Paging Group ID TLV in the RNG-RSP. If the target BS responds with a successful Location Update Response = 0x00 (Success of Location Update), the target BS shall notify the paging controller via the backbone network of the MS new location information, the MS shall assume the Paging Group ID of the target BS, and the paging controller may send a message over the backbone network to inform the BS at which the MS entered idle mode that the MS has transitioned to a different Paging Group. Upon receiving RNG-REQ with a Ranging Purpose Indication TLV with bit 4 set to a value of '1', the BS shall include CID_Update TLV in RNG-RSP and shall include at least the SFID, Multicast CID, MBS Zone Identifier Assignment parameter, and may include MBS contents IDs, for any multi-BS-MBS service flow for which the MBS Zone has changed. If the target BS evaluates the HMAC/CMAC Tuple as invalid, cannot supply a corresponding authenticating HMAC/CMAC Tuple, or otherwise elects to direct the MS to use unsecure location update, then the target BS shall instruct the MS to start network reentry using the unsecure location update process by inclusion of Location Update Response TLV in RNG-RSP with a value of 0x01 (Failure of Location Update).

6.3.23.8.2.2 Unsecure location update process

If the target BS does not share a current, valid security context with the MS, or if for any reason the BS has elected to instruct the MS to use Unsecure Location Update, the MS shall initiate Network Re-Entry from Idle Mode method (see 6.3.23.9).

6.3.23.9 Network reentry from idle mode

For the network reentry from idle mode method, the MS shall initiate network reentry with the target BS by sending a RNG-REQ including Ranging Purpose Indication TLV with Bit 0 set to 1 and Paging Controller ID TLVs (11.1.8.2).

If the MS shares a valid security context with the target BS so that the MS may include a valid HMAC/CMAC Tuple in the RNG-REQ, then the MS shall conduct initial ranging with the target BS by sending a RNG-REQ including HMAC/CMAC Tuple.

If MS RNG-REQ includes a Ranging Purpose Indication TLV with Bit 0 set to 1 and Paging Controller ID TLVs, and target BS had not previously received MS information over the backbone network, then target BS may make an MS information request of paging controller over the backbone network and paging controller may respond. Regardless of having received MS information from paging controller, target BS may request MS information from another network management entity via the backbone network.

Network reentry proceeds per 6.3.9 except as may be shortened by target BS possession of MS information obtained from paging controller or other network entity over the backbone network.

For the target BS to notify an MS seeking network reentry from idle mode of reentry process management messages that may be omitted during the current reentry attempt due to the availability of MS service and operational context information obtained over the backbone network, the target BS shall place an HO Process Optimization TLV in the RNG-RSP indicating which reentry management messages may be

omitted. The target BS shall not direct the omission of any reentry process management messages that would compromise the security or integrity of normal operation of the communications as established through an unabridged Initial Entry.

If the target BS evaluates a HMAC/CMAC Tuple included in the RNG-REQ as valid and can supply a corresponding authenticating HMAC/CMAC Tuple, then the target BS may reply with a RNG-RSP including the valid HMAC/CMAC Tuple. The target BS shall not indicate through the HO Process Optimization TLV that the PKM-REQ/RSP management messages may be omitted in the current reentry attempt without inclusion of a valid HMAC/CMAC Tuple. If an MS detects an invalid HMAC/CMAC Tuple included as part of a RNG-RSP during network reentry from idle mode, the MS shall discard the RNG-RSP message.

During network reentry from idle mode the BS shall select the security settings to be applied in the MS using HO optimization security bits (bit 1,bit 2) in HO process optimization TLV included in the RNG-RSP. The MS and BS shall follow the rules defined in 6.3.21.2.8.1.6.6 for the target BS and re-entering MS according to the optimization bits.

Regardless of the HO Process Optimization TLV settings, the target BS may elect to use MS service and operational information obtained over the backbone network to build and send unsolicited SBC-RSP and/or REG-RSP management messages to update MS operational information, or to include REG-RSP-specific (11.7) or SBC-RSP-specific (11.8) message items as TLV items in the RNG-RSP. The target BS may ignore only the first corresponding REQ management message received if it sends an unsolicited SBC-RSP or unsolicited REG-RSP message. MS is not required to send the complimentary REQ management message if it receives an unsolicited SBC-RSP or unsolicited REG-RSP management message prior to MS attempt to send the corresponding REQ management message. Target BS reentry unsolicited response management messages may be grouped into the same DL frame transmission and may be grouped into the same DL frame transmission with the RNG-RSP. However, unsolicited SBC-RSP and unsolicited REG-RSP may not be grouped together into the same DL frame transmission when the PKM-REQ/RSP management message process is required.

If MS RNG-REQ includes Ranging Purpose Indication TLV with Bit 0 set to 1 and Paging Controller ID TLVs, and target BS has received a message over the backbone network containing MS information, the target BS may use MS service and operational information obtained over the backbone network to build and send a REG-RSP message or a RNG-RSP message with REG-RSP encodings TLV that includes service flow remapping information in SFID, New_CID, and Connection_Info TLVs.

During network reentry, the target BS may notify the MS, through the Bit 9 MS DL data pending element of the HO Process Optimization TLV item in RNG-RSP, of post- network reentry MS DL data pending. Upon MS successful reentry at target BS, now new serving BS, and new serving BS completing reception of any network reentry pending MS DL data retained and forwarded, MS may reestablish IP connectivity and the new serving BS may send a message over the backbone network to request the old serving BS or other network entity to stop forwarding pre-HO pending MS DL data.

Network entry/reentry process completes with establishment of normal operations.

The target BS shall notify the paging controller via the backbone of MS successful network reentry, and the paging controller may send a message over the backbone network to inform the BS at which the MS entered idle mode that the MS has resumed normal operations at the new serving BS.

6.3.24 MIHF support

MIHF support is the support of IEEE 802.21 specific features and functions. The IEEE 802.16 entity may send or receive the MOB_MIH-MSG message to or from the peer IEEE 802.16 entity in order to convey MIHF frames carrying the IEEE 802.21 MIH protocol messages.

When MIH query capability during network entry is enabled (refer to 11.4.1 and 11.8.10), PKM messages may be used to exchange MIH frames for MIH queries.

The MS may submit an MIH query by sending a PKM-REQ message with code 31 (MIH Initial Request) containing an MIHF frame encapsulating the query. Upon receiving this message the BS acknowledges the request by sending a PKM-RSP message with code 32 (MIH Acknowledge). This message does not contain the response to the MIH query, but contains a Cycle TLV (11.9.38) that indicates when the response is expected to be ready for delivery to the MS. This message also contains a Query ID, which the MS may use to correlate the query with the response, and the delivery method (unicast or broadcast) that the BS will use.

When a unicast delivery method has been negotiated, then if the BS is ready to transmit the MIH response, the BS shall allocate bandwidth for the MS in the UL-MAP in the MAC frame indicated by the Cycle TLV. Upon receiving this UL allocation, the MS shall transmit at least a Bandwidth request PDU. If the MS has no data to transmit, the BR field of the Bandwidth request PDU shall be set to 0. The BS may use the receipt of the Bandwidth request PDU to assert the continued presence of the MS. If the MS does not send at least a Bandwidth Request PDU, the BS shall abort the network entry procedure for the MS, otherwise it shall send a PKM-RSP message with code 33 (MIH Comeback Response) containing the encapsulated MIH response. The MIH Comeback Response message shall also contain the Query ID previously sent in the MIH Acknowledge message, which the MS may use to correlate the MIH response with the MIH query. When a broadcast delivery method has been negotiated, then if the BS is ready to transmit the MIH response, the BS shall transmit an SII-ADV message containing the MIH response in the MAC frame indicated by the Cycle TLV.

If the BS is not ready to transmit the MIH response at the time indicated by the Cycle TLV, the MS and BS shall wait for another cycle and repeat the procedures specified in the preceding paragraph. The maximum number of times the MS and BS shall perform those procedures is determined by the MIH max cycles system parameter (Table 10.1, Table 554).

6.3.25 Location Based Services

This subclause provides mechanisms to coordinate the collection, generation, and reporting of information used to determine MS location (e.g., RSSI, CINR, Time Difference of Arrival (TDOA), Time of Arrival (TOA), …). Reporting of BS location information is also described.

6.3.25.1 Time Difference of Arrival (TDOA)

TDOA is a location determination scheme that measures the difference of time arrival for packet transmission between a MS and multiple BSs. There are two types of TDOA - Downlink TDOA (D-TDOA) and Uplink TDOA (U-TDOA) based on whether the measurements are performed in the MS and the BS, respectively.

— D-TDOA - MS may report D-TDOA data in the Relative Delay parameter in MOB_SCN-REP message that indicates the delay of DL signals from a neighbor BS relative to the serving BS. MOB_SCN-REP also reports RSSI and CINR of DL signals from neighbor BS that can be used for MS location estimation. During SBC-REQ/RSP based capability negotiation, HO Trigger metric support (see 11.8.6) indicates which trigger metric that the MS supports.

— U-TDOA - As opposed to D-TDOA that is reported each time MS scanning is completed, U-TDOA enables BS to initiate U-TDOA measurement when it is needed. Annex L describes two algorithms to show the U-TDOA measurement through the coordination of MS, serving BS, and one or more neighbor BS for wireless broadband networks: the General U-TDOA Method, for any FRF (Frequency Reuse Factor); and the Special U-TDOA Method, for FRF = 1.

6.3.26 Persistent Scheduling

Persistent Scheduling is a technique used to reduce MAP overhead for connections with periodic traffic pattern and with relatively fixed payload size. To allocate resources persistently, the BS shall transmit the Persistent HARQ DL MAP IE (8.4.5.3.29) for DL allocations and the Persistent HARQ UL MAP IE (8.4.5.4.28) for UL allocations. The persistently allocated resource and the MCS shall be maintained by the BS and MS until the persistent assignment is de-allocated, changed, or an error event occurs. Persistent Scheduling does not include special arrangements for retransmission of data initially transmitted using persistently allocated resources. Resources for retransmissions can be allocated one at a time as needed using either HARQ DL/UL MAP IE or Persistent HARQ DL/UL MAP IE. Persistent scheduling is defined for OFDMA PHY option only.

6.3.26.1 Persistent Region ID

The resources for persistent allocations are relative to the boundary of a HARQ region, which is identified by a Persistent Region ID. The position of a MSs persistent resource shall be determined based on the HARQ region definition and the slot offset, which is assigned in the Persistent HARQ DL MAP IE or the Persistent HARQ UL MAP IE. The slot offset is counted from the lowest numbered OFDMA symbol in the lowest numbered subchannel of HARQ Region. This operation applies to both DL and UL in TDD and H-FDD operation.

6.3.26.1.1 Downlink operation

6.3.26.1.1.1 BS operation

To change the location of a HARQ region associated with a particular Persistent Region ID, the BS transmits the Persistent HARQ DL MAP IE with a new HARQ Region definition (OFDMA Symbol offset, Subchannel offset, Number of OFDMA symbols, Number of subchannels) and sets the Persistent Region ID field of the Persistent HARQ DL MAP IE to the associated Persistent Region ID. The BS should set the allocation period to the same value for all persistent allocations associated with a particular Persistent Region ID.

6.3.26.1.1.2 MS operation

If the MS receives a persistent HARQ DL MAP IE, which includes its RCID and has the Persistent Flag set to 1, the MS shall store the Persistent Region ID field and the HARQ region definition. The MS shall determine its resource allocation using the slot offset field and the HARQ region definition. Upon receiving a subsequent Persistent HARQ DL MAP IE in a frame corresponding to the period of the persistent allocation, which has the Persistent Region ID field set to the stored Persistent Region ID, the MS shall store the new HARQ region definition and determine its resource allocation using the slot offset field and the new HARQ region definition. If the MS successfully decodes the DL-MAP and there is no Persistent HARQ DL MAP IE containing its assigned Persistent Region ID, then the MS shall use the stored location for the Persistent Region ID for its persistent allocation.

6.3.26.1.2 Uplink operation

6.3.26.1.2.1 BS operation

To change the location of a HARQ region associated with a particular Persistent Region ID, the BS transmits the Persistent HARQ UL MAP IE with a new HARQ Region definition. For uplink operation, the HARQ region is identified by the start of the UL subframe or allocation start indication information (if included). Additionally, the BS sets the Persistent Region ID field of the Persistent HARQ UL MAP IE to the associated Persistent Region ID. The BS should set the allocation period to the same value for all persistent allocations associated with a particular Persistent Region ID.

6.3.26.1.2.2 MS operation

If the MS receives a persistent HARQ UL MAP IE, which includes its RCID and has the Persistent Flag set to 1, the MS shall store the Persistent Region ID and the HARQ region definition. The MS shall determine its resource allocation using the slot offset field and the HARQ region definition. Upon receiving a subsequent Persistent HARQ UL MAP IE in a distance in time which is multiple of the period of the persistent allocation, which has same Persistent Region ID value, the MS shall store the new HARQ region definition and determine its resource allocation using the slot offset field and the new HARQ region definition. If the MS successfully decodes the UL-MAP and there is no Persistent HARQ UL MAP IE containing its assigned Persistent Region ID, then the MS shall use the stored location for the Persistent Region ID for its persistent allocation.

6.3.26.2 Resource shifting

When a persistently allocated resource is de-allocated, a resource hole is created that consists of unused OFDMA slots as illustrated in Figure 153.

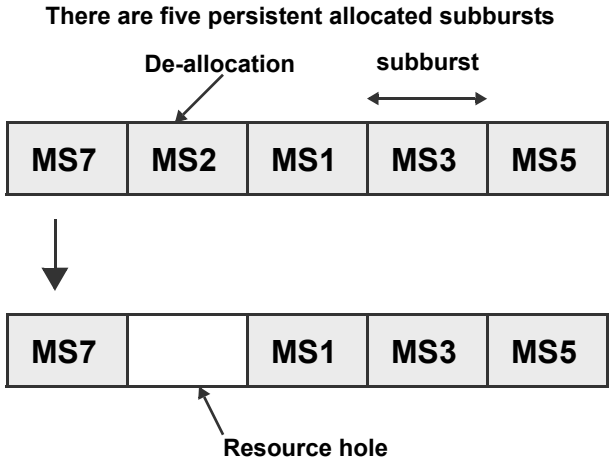

Figure 153—Example resource hole

The BS may use resource shifting to mitigate resource holes. For downlink operation, if the Resource Shifting Indicator in the subburst IEs of the Persistent HARQ DL MAP allocation IE is set to ‘1’, the MS shall shift its persistent resource position by the accumulated slots as indicated by de-allocation commands with slot offsets smaller than its own. For uplink operation, if the Resource Shifting Indicator in the subburst IEs of the Persistent HARQ UL MAP allocation IE is set to ‘1’, the MS shall shift its persistent resource position by the accumulated slots as indicated by de-allocation commands with slot offsets smaller than its own. Note that in this case the MS shifts its resource allocation in response to the subburst IE with RCID different from its own. When the Resource Shifting Indicator is set to ‘0’, the MS shall not shift its persistent resource position in response to subburst IEs with RCID different from its own. Figure 154 shows exemplary operation of resource shifting where the resource of MS2 is de-allocated. Since MS1, MS3 and MS5 are located after MS2, their slot offset values are larger than that of MS2. Therefore, their slot position is shifted to remove the resource hole.

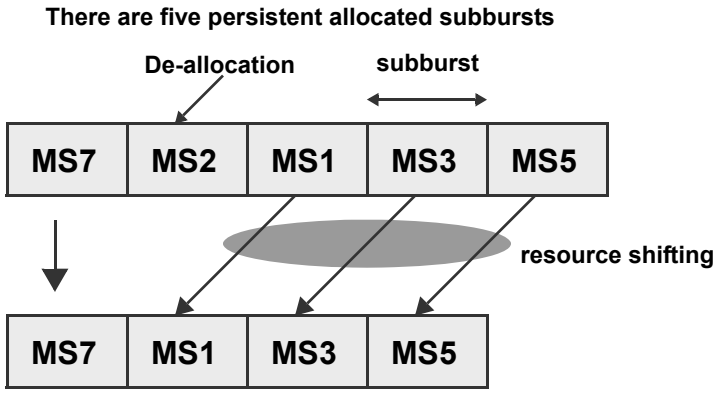

Figure 154—Example resource shifting

6.3.26.3 HARQ retransmission

The BS may use any one of the following IEs to assign resources for HARQ retransmissions:

Downlink:
HARQ DL MAP Allocation IE
Persistent HARQ DL MAP Allocation IE with Persistent Flag set to 0

Uplink:
HARQ UL MAP Allocation IE
Persistent HARQ UL MAP Allocation IE with Persistent Flag set to 0

6.3.26.4 Error handling procedures

The BS may assign to MSs that have persistent resource allocations a persistent MAP NACK channel and a non-persistent MAP ACK channel. The MAP NACK channel is persistent for the whole time the persistent resource allocation exists.

The MS shall transmit at the MAP ACK signal via assigned MAP ACK channel to acknowledge the correct reception of a Persistent HARQ DL MAP IE or Persistent HARQ UL MAP IE, which includes the RCID of the MS. The MAP ACK channel carries one codeword indicating an ACK as described in 8.4.11.16.

The MAP NACK channel is a shared channel used by the MS to indicate MAP decoding errors. The BS may assign the same MAP NACK channel index to one or more MSs therefore more than one MS may transmit using a particular MAP NACK channel at the same time. The MAP NACK channel carries one codeword indicating a NACK as described in 8.4.11.17.

The MAP ACK and MAP NACK channels correspond to resources within the Fast Feedback region (8.4.11).

6.3.26.4.1 Maximum Number of Persistent Allocations

The maximum number of DL persistent allocations for a specific MS per frame per Persistent Region ID is 1. The maximum number of UL persistent allocations for a specific MS per frame per Persistent Region ID is 1. Therefore, if an MS has an existing persistent allocation for a particular Persistent Region ID valid in a

particular frame and receives a new persistent allocation for the same Persistent Region ID valid in the same frame, the new persistent allocation replaces the original allocation (i.e., the original persistent allocation is de-allocated). When resource shifting is enabled, the BS shall not de-allocate the persistent allocation by assigning a new allocation.

6.3.26.4.2 MAP ACK channel

The MS shall transmit a MAP ACK indication to the BS using the assigned MAP ACK channel upon receipt of a Persistent HARQ DL MAP IE, which includes the RCID of the MS. Similarly, the MS shall transmit a MAP ACK indication to the BS using the assigned MAP ACK channel index upon receipt of a Persistent HARQ UL MAP IE, which includes the RCID of the MS. The MAP ACK channel shall be transmitted in the relevant UL subframe, as described in 6.3.7.5. The BS should interpret the absence of an acknowledgement on the MAP ACK channel as a NACK. Procedures for error recovery from MAP loss indicated by the MAP ACK channel are left to vendors' implementation and are out of scope of this standard.

Once the MS has successfully received the persistent allocation IE and if a valid MAP NACK channel is assigned for the allocation, the MS shall indicate subsequent MAP losses using the designated MAP NACK channel as described in 6.3.26.4.3.

6.3.26.4.3 MAP NACK channel

6.3.26.4.3.1 Downlink operation

If the MS fails to decode the DL-MAP or the compressed DL-MAP in a frame which is relevant to a frame in which it has a persistent DL resource allocation, the MS may send a MAP NACK on its assigned MAP NACK Channel in the frame following the relevant UL subframe as shown in Figure 155. The MS shall not transmit a MAP NACK if it successfully decodes the DL-MAP or the compressed DL-MAP and fails to decode one or more SUB-DL-UL-MAPs.

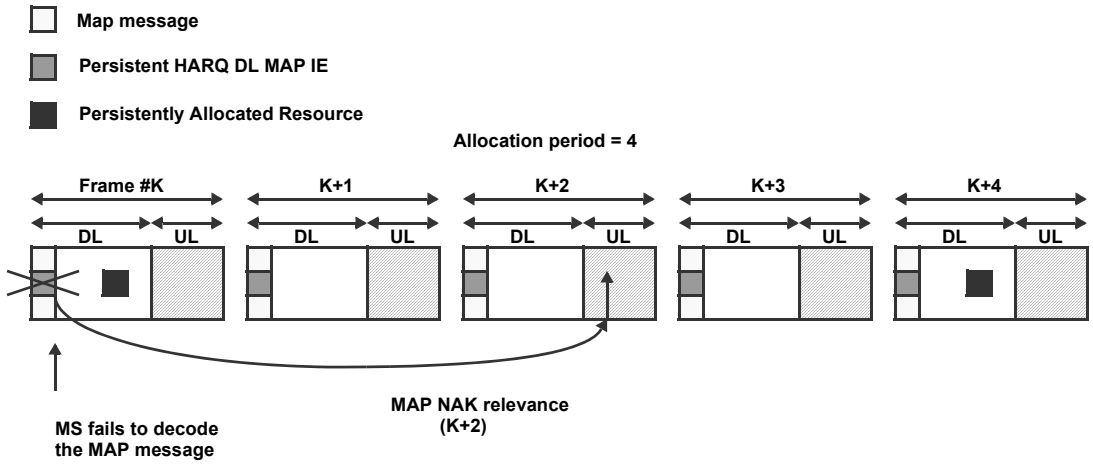

Figure 155—Example MAP NACK Relevance

Upon reception of the MAP NACK indication, the BS should determine if the persistent allocation needs to be updated.

6.3.26.4.3.2 Uplink operation

If the MS fails to decode the UL-MAP or the compressed UL-MAP in a frame which is relevant to a frame in which it has a persistent UL resource allocation, the MS may send a MAP NACK on its assigned MAP NACK Channel in the frame following the relevant UL subframe as shown in Figure 155. The MS shall not transmit a MAP NACK if it successfully decodes the UL-MAP or the compressed UL-MAP and fails to decode one or more SUB-DL-UL-MAPs.

Upon reception of the MAP NACK indication, the BS should determine if the persistent allocation needs to be updated.

6.3.26.4.4 Error Correction Information

If a MAP NACK is detected at the BS, the BS may either make absolute updates to all affected MSs, where an absolute update means that the base station transmits an assignment to the mobile station, which does not depend on knowledge of a previous assignment, or retransmit de-allocation command of frame *K – allocation period* (*ap*) by sending subburst IE with the Retransmission Flag set to 1. The BS may use other information, such as traffic ACK for DL allocations and UL traffic detection for UL allocations, to determine that error correction information is not needed. It is left to vendor's implementation whether to send error correction information, and if error correction information is sent, which types of commands, i.e., deallocation with retransmission flag = 1 or absolute updates to all affected MSs, the base station sends. An MS shall be able to recover persistent allocation by both types of commands.

6.3.26.4.5 Change indicator

A Change Indicator for each Persistent Region ID shall be included in the Persistent HARQ DL MAP IE.

A Change Indicator for each Persistent Region ID shall be included in the Persistent HARQ UL MAP IE.

A Change indicator in frame *K* shall be used by the MSs who failed to receive the DL-MAP or UL-MAP in frame *K – ap* to decide if they can resume using their persistent allocation in frame *K*.

An MS that failed to receive the DL-MAP or UL-MAP in frame *K – ap* shall interpret the change indicator= '0' as there were no changes, such as deallocation, Persistent HARQ Region change in the Persistent HARQ DL MAP IE or Persistent HARQ UL MAP IE in *K – ap*.

An MS that failed to receive the DL-MAP or UL-MAP in frame *K – ap* shall interpret the change indicator = '1' as there were change(s) in the Persistent HARQ DL MAP IE or Persistent HARQ UL MAP IE in *K – ap*.

The base station sets the change indicator to 0 in frame *K* in case there are sufficient evidences that all the MSs that involved in the changes in frame *K – ap* have received the change information.

6.3.26.4.6 Retransmission flag

A retransmission flag shall be included in the deallocation command of the Persistent HARQ DL MAP IE and the Persistent HARQ UL MAP IE. The retransmission flag shall be set to 1 to indicate that this deallocation command was transmitted in frame *K – ap* and is retransmitted for MS who missed the MAP in frame *K – ap*, to recover the persistent allocation. The MS, who failed to receive the DL-MAP or UL-MAP in frame *K – ap* shall process the deallocation command with retransmission flag equal to 1 to recover the MAP loss in frame *K – ap*, while the MS, who received the MAP in frame *K – ap*, shall disregard the deallocation command with retransmission flag equal to 1 in frame *K*. The retransmission flag shall be set to 0 to indicate that this deallocation command is transmitted to deallocate the persistent allocated resource in frame *K*.

6.3.26.4.7 Error recovery

6.3.26.4.7.1 Downlink persistent allocation error recovery

The MS that failed to decode the DL-MAP in frame *K* shall stop using the persistent allocation, including the data allocation, the MAP NACK allocation, and the HARQ ACK channel allocation, if any, in frame *K* + *allocation period* (*ap*), where *ap* is a field of the Persistent HARQ DL MAP IE (8.4.5.3.29) if any one of the following conditions is true in frame *K* + *ap*.

— Condition 1. The MS receives a Persistent HARQ DL MAP IE, which has the Change Indicator for the assigned Persistent Region ID set to 1.

Otherwise, the MS shall resume its persistent allocation, subject to any changes to its persistent allocation, for example de-allocation or reallocation, contained in the Persistent HARQ DL MAP IE in frame *K* + *ap*.

If the MS fails to decode the DL-MAP in a frame ($frame_{MAP}$) which is relevant to a frame in which it has a persistent DL resource allocation (frame *K*) and fails to decode the DL-MAP in $frame_{MAP} + ap$, and if MAP NACK channel is allocated to the MS (MAP NACK field is != 0b111111), the MS should attempt to send the Persistent Allocation Error Event extended subheader to the BS and shall stop using the persistent assignment including the data allocation, the MAP NACK allocation, and the HARQ ACK channel allocation, if any.

When MAP NAK channel is not allocated (MAP NACK field = 0b111111) to an MS and the MS failed to decode the DL-MAP in $\text{frame}_{\text{MAP}}$, the MS may resume using the persistent allocation in $\text{frame}_{\text{MAP}} + \text{N} \times$ Allocation Period (*ap*), where N is the number of relevant MAPs and *ap* is a field of the Persistent HARQ DL MAP IE if the change indicator for the assigned Persistent Region ID is set to 0 in $\text{frame}_{\text{MAP}} + \text{N} \times ap$. If the MS successfully decodes the DL-MAP at $\text{frame}_{\text{MAP}} + \text{N} \times ap$ and the change indicator for the assigned Persistent Region ID is set to 1, the MS should attempt to send the Persistent Allocation Error Event extended subheader to the BS and shall stop using the persistent assignment including the data and the ACK channel allocation.

6.3.26.4.7.2 Uplink persistent allocation error recovery

The MS that failed to decode the UL-MAP in a frame ($frame_{MAP}$), which is relevant to a frame in which it has a persistent UL resource allocation (frame *K*), shall stop using the persistent allocation, including the data allocation, and the MAP NACK allocation, in the frame relevant to frame *K* + Allocation Period (*ap*), where *ap* is a field of the Persistent HARQ UL MAP IE (8.4.5.4.28) if any one of the following condition is true in $frame_{MAP} + ap$.

— Condition 1. The MS receives a Persistent HARQ UL MAP IE for the assigned Persistent Region ID, which has the Change Indicator for the assigned Persistent Region ID set to 1.

Otherwise, the MS shall resume its persistent allocation, subject to any changes to its persistent allocation, for example de-allocation or reallocation, contained in the Persistent HARQ UL MAP IE in $frame_{MAP} + ap$.

If the MS fails to decode the UL-MAP in a frame ($frame_{MAP}$) which is relevant to a frame in which it has a persistent DL/UL resource allocation (frame *K*) and fails to decode the UL-MAP in $frame_{MAP} + ap$, and if MAP NACK channel is allocated to the MS (MAP NACK field is != 0b111111), the MS shall transmit an indication to the BS and shall stop using the persistent assignment including the data allocation and the MAP NACK allocation. The allocation period is indicated in the subburst IE of the Persistent HARQ UL MAP IE.

When MAP NAK channel is not allocated (MAP NACK field = 0b111111) to an MS and the MS failed to decode the UL-MAP in $frame_{MAP}$, the MS may resume using the persistent allocation in $frame_{MAP} + \text{N} \times ap$, where N is the number of relevant MAPs and *ap* is a field of the Persistent HARQ UL MAP IE the change

indicator for the assigned Persistent Region ID is set to 0 in $frame_{MAP} + N \times ap$. If the MS successfully decodes the UL-MAP at $frame_{MAP} + N \times ap$ and the change indicator for the assigned Persistent Region ID is set to 1, the MS should attempt to send the Persistent Allocation Error Event extended subheader to the BS and shall stop using the persistent assignment including the data and the ACK channel allocation

6.3.27 Emergency Service

Emergency Service is defined as a service that would provide the public with alerts on imminent emergency events, such as earthquake, storm, tidal wave, etc. The alerts would target subscribers in a specific geographical location. The BS shall transmit the Emergency Service compound TLV via the DCD message (see Table 575).

The Emergency Service compound TLV shall contain the CIDs for Emergency Service TLV encoding required for an MS to identify a MAC PDU containing Emergency Service Message (ESM) (see Table 575). The Emergency Service compound TLV may include a "CS type for Emergency Service TLV" (see Table 578). If an MS supports the CS type used for Emergency Service, the MS shall receive and decode the Emergency Service message when there is one. CIDs specified by the "CIDs for Emergency Service TLV" encoding (see Table 578) shall not be assigned to the MS's connection which is established via DSA transaction. The BS may also broadcast emergency-related helpful alert information (e.g., commercial advertisement and announcements that may be of interest to the public) via ESM. The Emergency Service connection shall use neither header compression nor PHS.

The BS may broadcast ESM(s) either through an MBS permutation zone or through a normal DL zone (e.g., PUSC, FUSC and so on). If the BS decides to broadcast the ESM(s) through the MBS permutation zone, the BS shall transmit MBS_MAP_IE with indication of an ESM existence in the MBS permutation zone (see 8.4.5.3.12). Even if an MS is not monitoring the MBS channel, the MS shall check for and decode at least these two parameters in an MBS_MAP IE (the Macro diversity enhanced and the Existence of Emergency Service Message). If the MS detects the existence of ESM(s) sent through the MBS permutation zone, the MS shall decode the MBS_MAP message in order to identify the MBS data burst in which the MAC PDU containing Emergency Service Message(s) will be transmitted.

Instead of Broadcast Control Pointer IE (see 8.4.5.3.25), an Extended Broadcast Control Pointer IE (see 8.4.5.3.31) may be used to indicate the frame in which ESM(s) are going to be transmitted. When an MS in Idle Mode or Sleep Mode receives the Extended Broadcast Control Pointer IE with Type = 0x0 during its own interval (i.e., Paging Listening Interval in Idle Mode or Listening Window in Sleep Mode), the MS shall wake up in the frame specified by the Extended Broadcast Control Pointer IE and stay awake during the Transmission Duration indicated by the Extended Broadcast Control Pointer IE.

7. Security sublayer

The security sublayer provides subscribers with privacy, authentication, or confidentiality[19] across the broadband wireless network. It does this by applying cryptographic transforms to MAC PDUs carried across connections between SS and BS.

In addition, the security sublayer provides operators with strong protection from theft of service. The BS protects against unauthorized access to these data transport services by securing the associated service flows across the network. The security sublayer employs an authenticated client/server key management protocol in which the BS, the server, controls distribution of keying material to client SS. Additionally, the basic security mechanisms are strengthened by adding digital-certificate-based SS device-authentication to the key management protocol.

If during capabilities negotiation, the SS specifies that it does not support IEEE 802.16 security, step of authorization and key exchange shall be skipped. The BS, if provisioned so, shall consider the SS authenticated; otherwise, the SS shall not be serviced. Neither key exchange nor data encryption performed.

7.1 Architecture

Privacy has two component protocols as follows:

a) An encapsulation protocol for securing packet data across the fixed BWA network. This protocol defines a set of supported *cryptographic suites*, i.e., pairings of data encryption and authentication algorithms, and the rules for applying those algorithms to a MAC PDU payload.
b) A key management protocol (PKM) providing the secure distribution of keying data from the BS to the SS. Through this key management protocol, the SS and the BS synchronize keying data; in addition, the BS uses the protocol to enforce conditional access to network services.

The protocol stack for the security components of the system are shown in Figure 156.

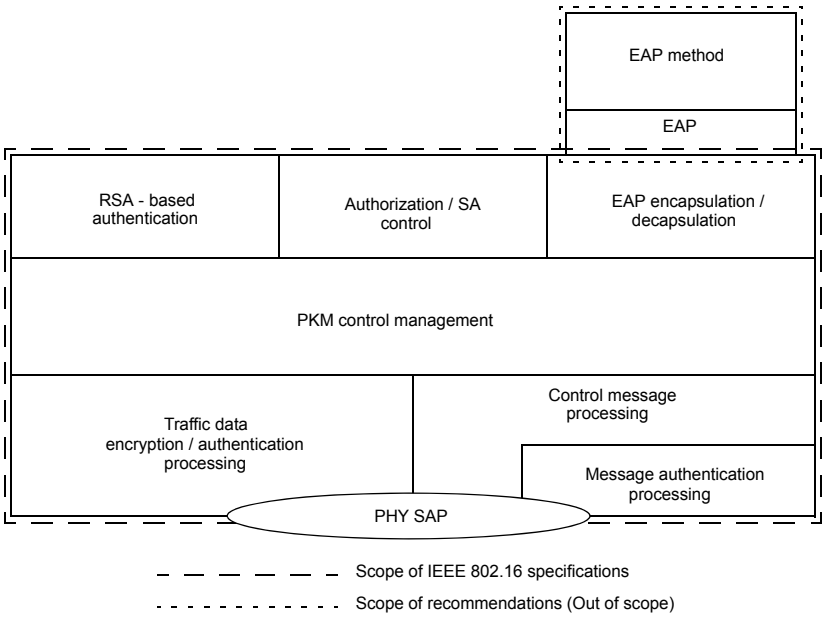

Figure 156—Security sublayer

[19]In security parlance, confidentiality = privacy + authenticity.

— PKM Control Management: This stack controls all security components. Various keys are derived and generated in this stack.
— Traffic Data Encryption/Authentication Processing: This stack encrypts or decrypts the traffic data and executes the authentication function for the traffic data.
— Control Message Processing: This stack processes the various PKM-related MAC messages.
— Message Authentication Processing: This stack executes message authentication function. The HMAC, CMAC, or several short-HMACs can be supported.
— RSA-based Authentication: This stack performs the RSA-based authentication function using the SS's X.509 digital certificate and the BS's X.509 digital certificate, when the RSA-based authorization is selected as an authorization policy between an SS and a BS.
— EAP Encapsulation/Decapsulation: This stack provides the interface with the EAP layer, when the EAP-based authorization or the authenticated EAP-based authorization is selected as an authorization policy between an SS and a BS.
— Authorization/SA Control: This stack controls the authorization state machine and the traffic encryption key state machine.
— EAP and EAP Method Protocol: These stacks are outside of the scope of this standard.

7.1.1 Secure encapsulation of MAC PDUs

Encryption services are defined as a set of capabilities within the MAC security sublayer. MAC header information specific to encryption is allocated in the generic MAC header format.

Encryption is always applied to the MAC PDU payload when required by the selected ciphersuite; the generic MAC header is not encrypted. All MAC management messages shall be sent in the clear to facilitate registration, ranging, and normal operation of the MAC.

The format of MAC PDUs carrying encrypted packet data payloads is specified in 6.3.3.6.

7.1.2 Key management protocol

The PKM protocol allows for both mutual authentication and unilateral authentication (e.g., where the BS authenticates SS, but not vice versa). It also supports periodic reauthentication/reauthorization and key refresh. The key management protocol uses either EAP [IETF RFC 3748] or X.509 digital certificates [IETF RFC 3280] together with RSA public-key encryption algorithm [PKCS #1] or a sequence starting with RSA authentication and followed by EAP authentication. It uses strong encryption algorithms to perform key exchanges between an SS and BS.

The PKM's authentication protocol establishes a shared secret (i.e., the AK) between the SS and the BS. The shared secret is then used to secure subsequent PKM exchanges of TEKs. This two-tiered mechanism for key distribution permits refreshing of TEKs without incurring the overhead of computation-intensive operations.

A BS authenticates a client SS during the initial authorization exchange. Each SS presents its credentials, which shall be a unique X.509 digital certificate issued by the SS's manufacturer (in the case of RSA authentication) or a operator-specified credential (in the case of EAP-based authentication).

The BS associates an SS's authenticated identity to a paying subscriber and hence to the data services that subscriber is authorized to access.

Since the BS authenticates the SS, it may protect against an attacker employing a cloned SS that masquerades as a legitimate subscriber's SS.

The traffic key management portion of the PKM protocol adheres to a client/server model, where the SS (a PKM "client") requests keying material and the BS (a PKM "server") responds to those requests. This model ensures that individual SS clients receive only keying material for which they are authorized.

The PKM protocol uses MAC management messaging, i.e., PKM-REQ and PKM-RSP messages defined in 6.3.2.3. The PKM protocol is defined in detail in 7.2.

7.1.3 Authentication protocol

An SS uses the PKM protocol to obtain authorization and traffic keying material from the BS and to support periodic reauthorization and key refresh.

PKM supports the following two distinct authentication protocol mechanisms:

— RSA protocol [PKCS #1 v2.1 with SHA-1(FIPS 186-2)] (support is mandatory in PKMv1; support is optional in PKMv2)
— Extensible Authentication Protocol (optional unless specifically required)

7.1.3.1 PKM RSA authentication

The PKM RSA authentication protocol uses X.509 digital certificates [IETF RFC 3280], the RSA public-key encryption algorithm [PKCS #1] that binds public RSA encryption keys to MAC addresses of SSs.

A BS authenticates a client SS during the initial authorization exchange. Each SS carries a unique X.509 digital certificate issued by the SS's manufacturer. The digital certificate contains the SS's Public Key and SS MAC address. When requesting an AK, an SS presents its digital certificate to the BS. The BS verifies the digital certificate, and then uses the verified Public Key to encrypt an AK, which the BS then sends back to the requesting SS.

All SSs using RSA authentication shall have factory-installed RSA private/public key pairs or provide an internal algorithm to generate such key pairs dynamically. If an SS relies on an internal algorithm to generate its RSA key pair, the SS shall generate the key pair prior to its first AK exchange, described in 7.2.1. All SSs with factory-installed RSA key pairs shall also have factory-installed X.509 certificates. All SSs that rely on internal algorithms to generate an RSA key pair shall support a mechanism for installing a manufacturer-issued X.509 certificate following key generation.

7.1.3.2 PKM EAP authentication

PKM EAP Authentication uses Extensible Authentication Protocol [IETF RFC 3748] in conjunction with an operator-selected EAP Method (e.g., EAP-TLS [IETF RFC 2716]). The EAP method will use a particular kind of credential – such as an X.509 certificate in the case of EAP-TLS, or a Subscriber Identity Module in the case of EAP-SIM.

The particular credentials and EAP methods that are to be used are outside of the scope of this specification. However, the EAP method selected should fulfill the "mandatory criteria" listed in section 2.2 of IETF RFC 4017. Use of an EAP method not meeting these criteria may lead to security vulnerabilities.

During reauthentication, the EAP transfer messages are protected with an HMAC/CMAC Tuple. The BS and SS shall discard unprotected EAP transfer messages, or EAP transfer messages with invalid HMAC/CMAC Digests during reauthentication.

7.1.4 Mapping of connections to SAs

The following rules for mapping connections to SAs apply:

a) All transport connections shall be mapped to an existing SA.
b) Multicast transport connections may be mapped to any Static or Dynamic SA.
c) The secondary management connection shall be mapped to the Primary SA.
d) The basic and the primary management connections shall not be mapped to an SA.

The actual mapping is achieved by including the SAID of an existing SA in the DSA-xxx messages together with the CID. No explicit mapping of secondary management connection to the Primary SA is required.

7.1.5 Cryptographic suite

A cryptographic suite is the SA's set of methods for data encryption, data authentication, and TEK exchange. A cryptographic suite is specified as described in 11.9.14. The cryptographic suite shall be one of the ones listed in Table 601.

7.2 PKM protocol

There are two Privacy Key Management Protocols supported in this standard: PKM version 1 and PKMv2 with more enhanced features such as new key hierarchy, AES-CMAC, AES key wraps, and MBS.

7.2.1 PKM version 1

7.2.1.1 Security associations (SAs)

A security association (SA) is the set of security information a BS and one or more of its client SSs share in order to support secure communications across the IEEE 802.16 network. Three types of SAs are defined: Primary, Static, and Dynamic. Each SS establishes a primary security association during the SS initialization process. Static SAs are provisioned within the BS. Dynamic SAs are established and eliminated, on the fly, in response to the initiation and termination of specific service flows. Both Static and Dynamic SAs may be shared by multiple SSs.

An SA's shared information shall include the cryptographic suite employed within the SA. The shared information may include TEKs and Initialization Vectors. The exact content of the SA is dependent on the SA's cryptographic suite.

SAs are identified using SAIDs.

Each SS shall establish an exclusive Primary SA with its BS. The SAID of any SS's Primary SA shall be equal to the Basic CID of that SS.

Using the PKM protocol, an SS requests from its BS an SA's keying material. The BS shall ensure that each client SS only has access to the SAs it is authorized to access.

An SA's keying material [e.g., data encryption standard (DES) key and CBC IV] has a limited lifetime. When the BS delivers SA keying material to an SS, it also provides the SS with that material's remaining lifetime. It is the responsibility of the SS to request new keying material from the BS before the set of keying material that the SS currently holds expires at the BS. Should the current keying material expire before a new set of keying material is received, the SS shall perform network entry as described in 6.3.9.

In certain cryptographic suites, key lifetime may be limited by the exhaustion rate of a number space, e.g., the PN of AES in CCM mode [i.e., CTR mode with cipher block chaining message authentication code (CBC-MAC)]. In this case, the key ends either at the expiry of the key lifetime or the exhaustion of the number space, which ever is earliest. Note that in this case, security is not determined by the key lifetime.

7.2.1.2 SS authorization and AK exchange overview

SS authorization, controlled by the Authorization state machine, is the process of the BS's authenticating a client SS's identity:

a) The BS and SS establish a shared AK by RSA from which a key encryption key (KEK) and message authentication keys are derived.
b) The BS provides the authenticated SS with the identities (i.e., the SAIDs) and properties of Primary and Static SAs for which the SS is authorized to obtain keying information.

After achieving initial authorization, an SS periodically reauthorizes with the BS; reauthorization is also managed by the SS's Authorization state machine. TEK state machines manage the refreshing of TEKs.

7.2.1.2.1 Authorization via RSA authentication protocol

An SS begins authorization by sending an Authentication Information message to its BS. The Authentication Information message contains the SS manufacturer's X.509 certificate, issued by the manufacturer itself or by an external authority. The Authentication Information message is strictly informative; i.e., the BS may choose to ignore it. However, it does provide a mechanism for a BS to learn the manufacturer certificates of its client SS.

The SS sends an Authorization Request message to its BS immediately after sending the Authentication Information message. This is a request for an AK, as well as for the SAIDs identifying any Static SAs the SS is authorized to participate in. The Authorization Request includes

— A manufacturer-issued X.509 certificate.
— A description of the cryptographic algorithms the requesting SS supports. An SS's cryptographic capabilities are presented to the BS as a list of cryptographic suite identifiers, each indicating a particular pairing of packet data encryption and packet data authentication algorithms the SS supports.
— The SS's Basic CID. The Basic CID is the first static CID the BS assigns to an SS during initial ranging—the primary SAID is equal to the Basic CID.

In response to an Authorization Request message, a BS validates the requesting SS's identity, determines the encryption algorithm and protocol support it shares with the SS, activates an AK for the SS, encrypts it with the SS's public key, and sends it back to the SS in an Authorization Reply message. The authorization reply includes

— An AK encrypted with the SS's public key.
— A 4-bit key sequence number, used to distinguish between successive generations of AKs.
— A key lifetime.
— The identities (i.e., the SAIDs) and properties of the single primary and zero or more Static SAs for which the SS is authorized to obtain keying information.

While the Authorization Reply shall identify Static SAs in addition to the Primary SA whose SAID matches the requesting SS's Basic CID, the Authorization Reply shall not identify any Dynamic SAs.

The BS, in responding to an SS's Authorization Request, shall determine whether the requesting SS, whose identity can be verified via the X.509 digital certificate, is authorized for basic unicast services, and what additional statically provisioned services (i.e., Static SAIDs) the SS's user has subscribed for. Note that the protected services a BS makes available to a client SS can depend upon the particular cryptographic suites for which the SS and the BS share support.

An SS shall periodically refresh its AK by reissuing an Authorization Request to the BS. Reauthorization is identical to authorization with the exception that the SS does not send Authentication Information messages during reauthorization cycles. The description of the authorization state machine in 7.2.1.6 clearly indicates when Authentication Information messages are sent.

To avoid service interruptions during reauthorization, successive generations of the SS's AKs have overlapping lifetimes. Both the SS and BS shall be able to support up to two simultaneously active AKs during these transition periods. The operation of the Authorization state machine's Authorization Request scheduling algorithm, combined with the BS's regimen for updating and using a client SS's AKs (see 7.3), ensures that the SS can refresh.

7.2.1.3 TEK exchange overview

7.2.1.3.1 TEK exchange overview for PMP topology

Upon achieving authorization, an SS starts a separate TEK state machine for each of the SAIDs identified in the Authorization Reply message. Each TEK state machine operating within the SS is responsible for managing the keying material associated with its respective SAID. TEK state machines periodically send Key Request messages to the BS, requesting a refresh of keying material for their respective SAIDs.

The BS responds to a Key Request with a Key Reply message, containing the BS's active keying material for a specific SAID.

The TEK is encrypted using appropriate KEK derived from the AK.

Note that at all times the BS maintains two active sets of keying material per SAID. The lifetimes of the two generations overlap so that each generation becomes active halfway through the life of it predecessor and expires halfway through the life of its successor. A BS includes in its Key Replies *both* of an SAID's active generations of keying material.

The Key Reply provides the requesting SS, in addition to the TEK and CBC IV, the remaining lifetime of each of the two sets of keying material. The receiving SS uses these remaining lifetimes to estimate when the BS will invalidate a particular TEK and, therefore, when to schedule future Key Requests so that the SS requests and receives new keying material before the BS expires the keying material the SS currently holds.

The operation of the TEK state machine's Key Request scheduling algorithm, combined with the BS's regimen for updating and using an SAID's keying material (see 7.4), ensures that the SS will be able to continually exchange encrypted traffic with the BS.

A TEK state machine remains active as long as

a) The SS is authorized to operate in the BS's security domain, i.e., it has a valid AK, and
b) The SS is authorized to participate in that particular SA, i.e., the BS continues to provide fresh keying material during rekey cycles.

The parent Authorization state machine stops *all* of its child TEK state machines when the SS receives from the BS an Authorization Reject during a reauthorization cycle. Individual TEK state machines can be started or stopped during a reauthorization cycle if an SS's Static SAID authorizations changed between successive reauthorizations.

Communication between Authorization and TEK state machines occurs through the passing of events and protocol messaging. The Authorization state machine generates events (i.e., Stop, Authorized, Authorization Pending, and Authorization Complete events) that are targeted at its child TEK state machines. TEK state

machines do not target events at their parent Authorization state machine. The TEK state machine affects the Authorization state machine indirectly through the messaging a BS sends in response to an SS's requests: a BS may respond to a TEK machine's Key Requests with a failure response (i.e., Authorization Invalid message) to be handled by the Authorization state machine.

7.2.1.4 Security capabilities selection

As part of their authorization exchange, the SS provides the BS with a list of all the cryptographic suites (pairing of data encryption and data authentication algorithms) the SS supports. The BS selects from this list a single cryptographic suite to employ with the requesting SS's primary SA. The Authorization Reply the BS sends back to the SS includes a primary SA-Descriptor that, among other things, identifies the cryptographic suite the BS selected to use for the SS's primary SA. A BS shall reject the authorization request if it determines that none of the offered cryptographic suites are satisfactory.

The Authorization Reply also contains an optional list of static SA-Descriptors; each static SA-Descriptor identifies the cryptographic suite employed within the SA. The selection of a static SA's cryptographic suite is typically made independent of the requesting SS's cryptographic capabilities. A BS may include in its Authorization Reply static SA-Descriptors identifying cryptographic suites the requesting SS does not support; if this is the case, the SS shall not start TEK state machines for static SAs whose cryptographic suites the SS does not support.

If the SA holds an encryption method, all MAC PDUs sent with CIDs linked to this SA shall have EC bit set to '1' in the Generic MAC Header. If the SA has no encryption method, the EC bit shall be set to '0' in the Generic MAC Header. Other combinations are not allowed; MAC PDUs presenting other combinations should be discarded.

7.2.1.5 Authorization state machine

The Authorization state machine consists of six states and eight distinct events (including receipt of messages) that can trigger state transitions. The Authorization finite state machine (FSM) is presented below in a graphical format, as a state flow model (Figure 157), and in a tabular format, as a state transition matrix (Table 202).

The state flow diagram depicts the protocol messages transmitted and internal events generated for each of the model's state transitions; however, the diagram does not indicate additional internal actions, such as the clearing or starting of timers, that accompany the specific state transitions. Accompanying the state transition matrix is a detailed description of the specific actions accompanying each state transition; the state transition matrix shall be used as the definitive specification of protocol actions associated with each state transition.

The following legend applies to the Authorization State Machine flow diagram depicted in Figure 157.

a) Ovals are states.
b) Events are in *italics*.
c) Messages are in normal font.
d) State transitions (i.e., the lines between states) are labeled with <what causes the transition>/<messages and events triggered by the transition>. So "*timeout*/Auth Request" means that the state received a "timeout" event and sent an Authorization Request ("Auth Request") message. If there are multiple events or messages before the slash "/" separated by a comma, *any* of them can cause the transition. If there are multiple events or messages listed after the slash, *all* of the specified actions shall accompany the transition.

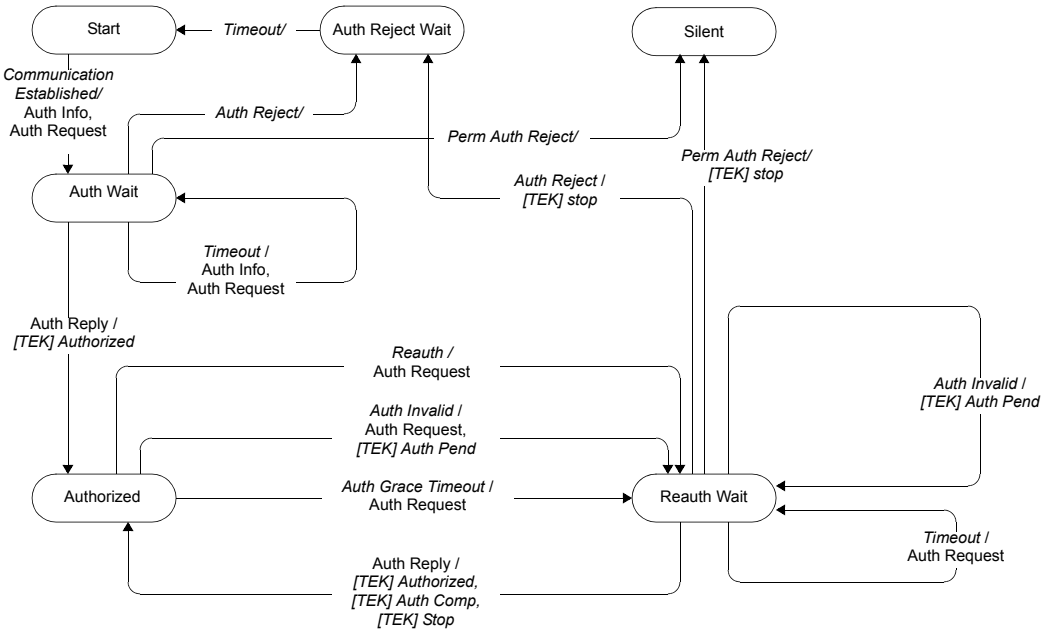

Figure 157—Authorization state machine flow diagram

The Authorization state transition matrix presented in Table 202 lists the six Authorization machine states in the topmost row and the eight Authorization machine events (includes message receipts) in the leftmost column. Any cell within the matrix represents a specific combination of state and event, with the next state (the state transitioned to) displayed within the cell. For example, cell 4-B represents the receipt of an Authorization Reply (Auth Reply) message when in the Authorize Wait (Auth Wait) state. Within cell 4-B is the name of the next state, "Authorized." Thus, when an SS's Authorization state machine is in the Auth Wait state and an Auth Reply message is received, the Authorization state machine will transition to the Authorized state. In conjunction with this state transition, several protocol actions shall be taken; these are described in the listing of protocol actions, under the heading 4-B, in 7.2.1.5.5.

A shaded cell within the state transition matrix implies that either the specific event cannot or should not occur within that state, and if the event does occur, the state machine shall ignore it. For example, if an Auth Reply message arrives when in the Authorized state, that message should be ignored (cell 4-C). The SS may, however, in response to an improper event, log its occurrence, generate an SNMP event, or take some other vendor-defined action. These actions, however, are not specified within the context of the Authorization state machine, which simply ignores improper events.

7.2.1.5.1 States

— *Start:* This is the initial state of the FSM. No resources are assigned to or used by the FSM in this state—e.g., all timers are off, and no processing is scheduled.
— *Authorize Wait (Auth Wait):* The SS has received the "Communication Established" event indicating that it has completed basic capabilities negotiation with the BS. In response to receiving the event, the SS has sent both an Authentication Information and an Auth Request message to the BS and is waiting for the reply.
— *Authorized:* The SS has received an Auth Reply message that contains a list of valid SAIDs for this SS. At this point, the SS has a valid AK and SAID list. Transition into this state triggers the creation of one TEK FSM for each of the SS's privacy-enabled SAIDs.
— *Reauthorize Wait (Reauth Wait):* The SS has an outstanding reauthorization request. The SS was either about to expire (see Authorization Grace Time in Table 555) its current authorization or

Table 202—Authorization FSM state transition matrix

State *Event or Rcvd Message*	(A) Start	(B) Auth Wait	(C) Authorized	(D) Reauth Wait	(E) Auth Reject Wait	(F) Silent
(1) *Communication Established*	Auth Wait					
(2) *Auth Reject*		Auth Reject Wait		Auth Reject Wait		
(3) *Perm Auth Reject*		Silent		Silent		
(4) Auth Reply		Authorized		Authorized		
(5) *Timeout*		Auth Wait		Reauth Wait	Start	
(6) *Auth Grace Timeout*			Reauth Wait			
(7) *Auth Invalid*			Reauth Wait	Reauth Wait		
(8) *Reauth*			Reauth Wait			

received an indication (an Authorization Invalid message from the BS) that its authorization is no longer valid. The SS sent an Auth Request message to the BS and is waiting for a response.

— *Authorize Reject Wait (Auth Reject Wait):* The SS received an Authorization Reject (Auth Reject) message in response to its last Auth Request. The Auth Reject's error code indicated the error was not of a permanent nature. In response to receiving this reject message, the SS set a timer and transitioned to the Auth Reject Wait state. The SS remains in this state until the timer expires.

— *Silent:* The SS received an Auth Reject message in response to its last Auth Request. The Auth Reject's error code indicated the error was of a permanent nature. This triggers a transition to the Silent state, where the SS is not permitted to pass subscriber traffic. The SS shall, however, respond to management messages from the BS issuing the Perm Auth Reject.

7.2.1.5.2 Messages

Note that the message formats are defined in detail in 6.3.2.3.9.

— *Authorization Request (Auth Request):* Request an AK and list of authorized SAIDs. Sent from SS to BS.

— *Authorization Reply (Auth Reply):* Receive an AK and list of authorized, static SAIDs. Sent from BS to SS. The AK is encrypted with the SS's public key.

— *Authorization Reject (Auth Reject):* Attempt to authorize was rejected. Sent from the BS to the SS.

— *Authorization Invalid (Auth Invalid):* The BS may send an Authorization Invalid message to a client SS as follows:

  — An unsolicited indication, or

  — A response to a message received from that SS.

  In either case, the Auth Invalid message instructs the receiving SS to reauthorize with its BS.

  The BS responds to a Key Request with an Auth Invalid message if (1) the BS does not recognize the SS as being authorized (i.e., no valid AK associated with SS) or (2) verification of the Key

Request's keyed message digest (in HMAC-Digest attribute) failed. Note that the Authorization Invalid *event*, referenced in both the state flow diagram and the state transition matrix, signifies either the receipt of an Auth Invalid message or an internally generated event.

— *Authentication Information (Auth Info):* The Auth Info message contains the SS manufacturer's X.509 Certificate, issued by an external authority. The Auth Info message is strictly an informative message the SS sends to the BS; with it, a BS may dynamically learn the manufacturer certificate of client SS. Alternatively, a BS may require out-of-band configuration of its list of manufacturer certificates.

7.2.1.5.3 Events

— *Communication Established:* The Authorization state machine generates this event upon entering the Start state if the MAC has completed basic capabilities negotiation. If the basic capabilities negotiation is not complete, the SS sends a Communication Established event to the Authorization FSM upon completing basic capabilities negotiation. The Communication Established event triggers the SS to begin the process of getting its AK and TEKs.

— *Timeout:* A retransmission or wait timer timed out. Generally a request is resent.

— *Authorization Grace Timeout (Auth Grace Timeout):* The Authorization Grace timer timed out. This timer fires a configurable amount of time (the Authorization Grace Time) before the current authorization is supposed to expire, signalling the SS to reauthorize before its authorization actually expires. The Authorization Grace Time takes the default value from Table 555 or may be specified in a configuration setting within the Auth Reply message.

— *Reauthorize (Reauth):* SS's set of authorized static SAIDs may have changed. This event may be generated in response to an SNMP set and meant to trigger a reauthorization cycle.

— *Authorization Invalid (Auth Invalid):* This event is internally generated by the SS when there is a failure authenticating a Key Reply or Key Reject message, or externally generated by the receipt of an Auth Invalid message, sent from the BS to the SS. A BS responds to a Key Request with an Auth Invalid if verification of the request's message authentication code fails. Both cases indicate BS and SS have lost AK synchronization.

  A BS may also send to an SS an unsolicited Auth Invalid message, forcing an Auth Invalid event.

— *Permanent Authorization Reject (Perm Auth Reject):* The SS receives an Auth Reject in response to an Auth Request. The error code in the Auth Reject indicates the error is of a permanent nature. What is interpreted as a permanent error is subject to administrative control within the BS. Auth Request processing errors that can be interpreted as permanent error conditions include the following:

  — Unknown manufacturer (do not have CA certificate of the issuer of the SS Certificate).
  — Invalid signature on SS certificate.
  — ASN.1 parsing failure.
  — Inconsistencies between data in the certificate and data in accompanying PKM data attributes.
  — Incompatible security capabilities.

  When an SS receives an Auth Reject indicating a permanent failure condition, the Authorization State machine moves into a Silent state, where the SS is not permitted to pass subscriber traffic. The SS shall, however, respond to management messages from the BS issuing the Perm Auth Reject. The managed SS may also issue an SNMP Trap upon entering the Silent state.

— *Authorization Reject (Auth Reject):* The SS receives an Auth Reject in response to an Auth Request. The error code in the Auth Reject does not indicate the failure was due to a permanent error condition. As a result, the SS's Authorization state machine shall set a wait timer and transition into the Auth Reject Wait State. The SS shall remain in this state until the timer expires, at which time it shall reattempt authorization.

NOTE—The following events are sent by an Authorization state machine to the TEK state machine:

— *[TEK] Stop:* Sent by the Authorization FSM to an active (non-START state) TEK FSM to terminate the FSM and remove the corresponding SAID's keying material from the SS's key table.
— *[TEK] Authorized:* Sent by the Authorization FSM to a nonactive (START state), but valid TEK FSM.
— *[TEK] Authorization Pending (Auth Pend):* Sent by the Authorization FSM to a specific TEK FSM to place that TEK FSM in a wait state until the Authorization FSM can complete its reauthorization operation.
— *[TEK] Authorization Complete (Auth Comp):* Sent by the Authorization FSM to a TEK FSM in the Operational Reauthorize Wait (Op Reauth Wait) or Rekey Reauthorize Wait (Rekey Reauth Wait) states to clear the wait state begun by a TEK FSM Authorization Pending event.

7.2.1.5.4 Parameters

All configuration parameter values take the default values from Table 555 or may be specified in the Auth Reply message.

— *Authorize Wait Timeout (Auth Wait Timeout):* Timeout period between sending Authorization Request messages from Auth Wait state (see 11.9.18.2).
— *Authorization Grace Timeout (Auth Grace Timeout):* Amount of time before authorization is scheduled to expire that the SS starts reauthorization (see 11.9.18.3).
— *Authorize Reject Wait Timeout (Auth Reject Wait Timeout):* Amount of time an SS's Authorization FSM remains in the Auth Reject Wait state before transitioning to the Start state (see 11.9.18.7).

7.2.1.5.5 Actions

Actions taken in association with state transitions are listed by <event> (<rcvd message>) --> <state> below:

1-A Start (*Communication Established*) → Auth Wait

a) Send Auth Info message to BS
b) Send Auth Request message to BS
c) Set Auth Request retry timer to Auth Wait Timeout

2-B Auth Wait (*Auth Reject*) → Auth Reject Wait

a) Clear Auth Request retry timer
b) Set a wait timer to Auth Reject Wait Timeout

2-D Reauth Wait (*Auth Reject*) → Auth Reject Wait

a) Clear Auth Request retry timer
b) Generate TEK FSM Stop events for all active TEK state machines
c) Set a wait timer to Auth Reject Wait Timeout

3-B Auth Wait (*Perm Auth Reject*) → Silent

a) Clear Auth Request retry timer
b) Disable all forwarding of SS traffic

3-D Reauth Wait (*Perm Auth Reject*) → Silent

a) Clear Auth Request retry timer
b) Generate TEK FSM Stop events for all active TEK state machines

c) Disable all forwarding of SS traffic

4-B Auth Wait (Auth Reply) → Authorized

a) Clear Auth Request retry timer
b) Decrypt and record AK delivered with Auth Reply
c) Start TEK FSMs for all SAIDs listed in Authorization Reply (provided the SS supports the cryptographic suite that is associated with an SAID) and issue a TEK FSM Authorized event for each of the new TEK FSMs
d) Set the Authorization Grace timer to go off "Authorization Grace Time" seconds prior to the supplied AK's scheduled expiration

4-D Reauth Wait (Auth Reply) → Authorized

a) Clear Auth Request retry timer
b) Decrypt and record AK delivered with Auth Reply
c) Start TEK FSMs for any newly authorized SAIDs listed in Auth Reply (provided the SS supports the cryptographic suite that is associated with the new SAID) and issue TEK FSM Authorized event for each of the new TEK FSMs
d) Generate TEK FSM Authorization Complete events for any currently active TEK FSMs whose corresponding SAIDs were listed in Auth Reply
e) Generate TEK FSM Stop events for any currently active TEK FSMs whose corresponding SAIDs were not listed in Auth Reply
f) Set the Authorization Grace timer to go off "Authorization Grace Time" seconds prior to the supplied AK's scheduled expiration

5-B Auth Wait (*Timeout*) → Auth Wait

a) Send Auth Info message to BS
b) Send Auth Request message to BS
c) Set Auth Request retry timer to Auth Wait Timeout

5-D Reauth Wait (*Timeout*) → Reauth Wait

a) Send Auth Request message to BS
b) Set Auth Request retry timer to Reauth Wait Timeout

5-E Auth Reject Wait (*Timeout*) → Start

a) No protocol actions associated with state transition

6-C Authorized (*Auth Grace Timeout*) → Reauth Wait

a) Send Auth Request message to BS
b) Set Auth Request retry timer to Reauth Wait Timeout

7-C Authorized (*Auth Invalid*) → Reauth Wait

a) Clear Authorization Grace timer
b) Send Auth Request message to BS

c) Set Auth Request retry timer to Reauth Wait Timeout

d) If the Auth Invalid event is associated with a particular TEK FSM, generate a TEK FSM Authorization Pending event for the TEK state machine responsible for the Auth Invalid event (i.e., the TEK FSM that either generated the event, or sent the Key Request message the BS responded to with an Auth Invalid message)

7-D Reauth Wait (*Auth Invalid*) → Reauth Wait

a) If the Auth Invalid event is associated with a particular TEK FSM, generate a TEK FSM Authorization Pending event for the TEK state machine responsible for the Auth Invalid event (i.e., the TEK FSM that either generated the event, or sent the Key Request message the BS responded to with an Auth Invalid message)

8-C Authorized (*Reauth*) → Reauth Wait

a) Clear Authorization Grace timer

b) Send Auth Request message to BS

c) Set Auth Request retry timer to Reauth Wait Timeout

7.2.1.6 TEK state machine

The TEK state machine consists of six states and nine events (including receipt of messages) that can trigger state transitions. Like the Authorization state machine, the TEK state machine is presented in both a state flow diagram (Figure 158) and a state transition matrix (Table 203). As was the case for the Authorization state machine, the state transition matrix shall be used as the definitive specification of protocol actions associated with each state transition.

Shaded states in Figure 158 (Operational, Rekey Wait, and Rekey Reauthorize Wait) have valid keying material and encrypted traffic can be passed.

The Authorization state machine starts an independent TEK state machine for each of its authorized SAIDs.

As mentioned in 7.2.1.3, the BS maintains two active TEKs per SAID. The BS includes in its Key Replies both of these TEKs, along with their remaining lifetimes. The BS encrypts DL traffic with the older of its two TEKs and decrypts UL traffic with either the older or newer TEK, depending upon which of the two keys the SS was using at the time. The SS encrypts UL traffic with the newer of its two TEKs and decrypts DL traffic with either the older or newer TEK, depending upon which of the two keys the BS was using at the time. See 7.4 for details on SS and BS key usage requirements.

Through operation of a TEK state machine, the SS attempts to keep its copies of an SAID's TEKs synchronized with those of its BS. A TEK state machine issues Key Requests to refresh copies of its SAID's keying material soon after the scheduled expiration time of the older of its two TEKs and before the expiration of its newer TEK. To accommodate for SS/BS clock skew and other system processing and transmission delays, the SS schedules its Key Requests a configurable number of seconds before the newer TEK's estimated expiration in the BS. With the receipt of the Key Reply, the SS shall always update its records with the TEK Parameters from both TEKs contained in the Key Reply message. Figure 158 illustrates the SS's scheduling of its key refreshes in conjunction with its management of an SA's active TEKs.

7.2.1.6.1 States

— *Start:* This is the initial state of the FSM. No resources are assigned to or used by the FSM in this state—e.g., all timers are off, and no processing is scheduled.

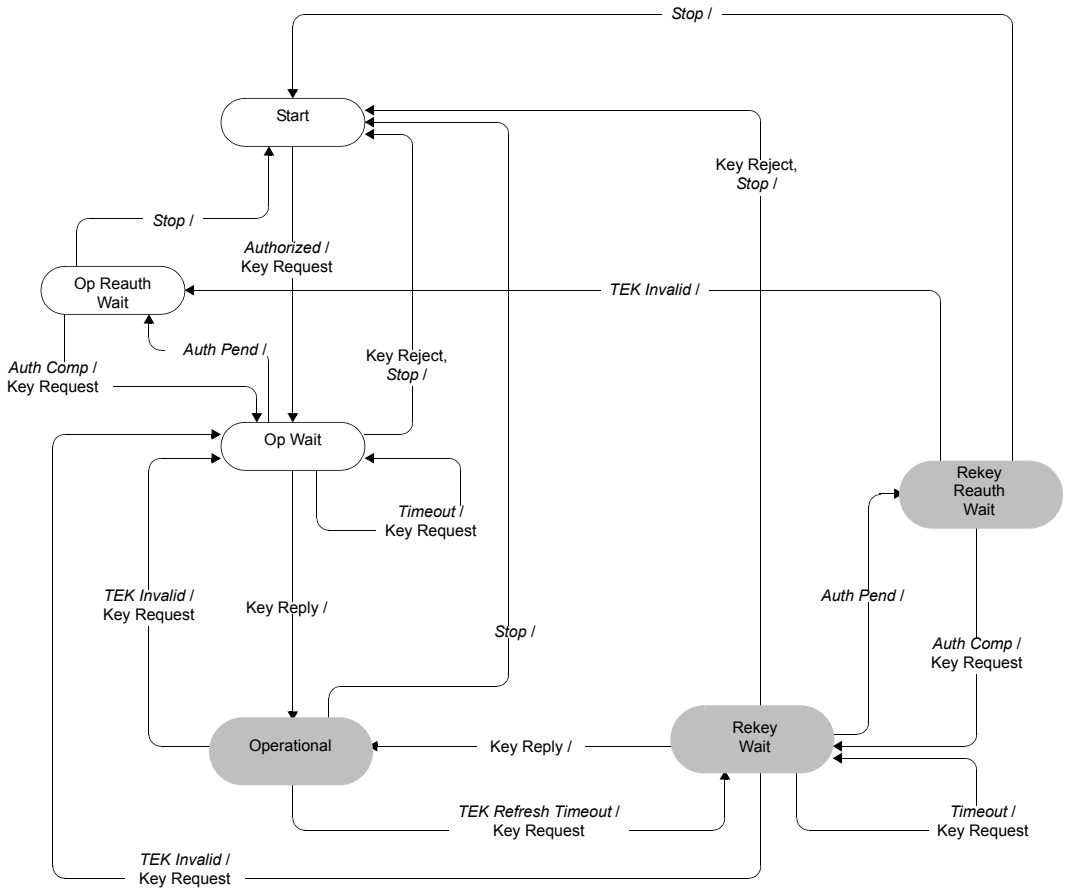

Figure 158—TEK state machine flow diagram

— *Operational Wait (Op Wait):* The TEK state machine has sent its initial request (Key Request) for its SAID's keying material (TEK and CBC IV), and is waiting for a reply from the BS.
— *Operational Reauthorize Wait (Op Reauth Wait):* The wait state the TEK state machine is placed in if it does not have valid keying material while the Authorization state machine is in the middle of a reauthorization cycle.
— *Operational:* The SS has valid keying material for the associated SAID.
— *Rekey Wait:* The TEK Refresh Timer has expired and the SS has requested a key update for this SAID. Note that the newer of its two TEKs has not expired and can still be used for both encrypting and decrypting data traffic.
— *Rekey Reauthorize Wait (Rekey Reauth Wait):* The wait state the TEK state machine is placed in if the TEK state machine has valid traffic keying material, has an outstanding request for the latest keying material, and the Authorization state machine initiates a reauthorization cycle.

7.2.1.6.2 Messages

Note that the message formats are defined in detail in 6.3.2.3.9.

— Key Request: Request a TEK for this SAID. Sent by the SS to the BS and authenticated with keyed message digest. The message authentication key is derived from the AK.
— Key Reply: Response from the BS carrying the two active sets of traffic keying material for this SAID. Sent by the BS to the SS, it includes the SAID's TEKs, encrypted with a KEK derived from

Table 203—TEK FSM state transition matrix

State ***Event or Rcvd Message***	**(A) Start**	**(B) Op Wait**	**(C) Op Reauth Wait**	**(D) Op**	**(E) Rekey Wait**	**(F) Rekey Reauth Wait**
(1) *Stop*		Start	Start	Start	Start	Start
(2) *Authorized*	Op Wait					
(3) *Auth Pend*		Op Reauth Wait			Rekey Reauth Wait	
(4) *Auth Comp*			Op Wait			Rekey Wait
(5) *TEK Invalid*				Op Wait	Op Wait	Op Reauth Wait
(6) *Timeout*		Op Wait			Rekey Wait	
(7) *TEK Refresh Timeout*				Rekey Wait		
(8) Key Reply		Operational			Operational	
(9) Key Reject		Start			Start	

the AK. The Key Reply message is authenticated with a keyed message digest; the authentication key is derived from the AK.

— Key Reject: Response from the BS to the SS to indicate this SAID is no longer valid and no key will be sent. The Key Reject message is authenticated with a keyed message digest; the authentication key is derived from the AK.

— TEK Invalid: The BS sends an SS this message if it determines that the SS encrypted an UL PDU with an invalid TEK, i.e., an SAID's TEK key sequence number, contained within the received PDU's MAC header, is out of the BS's range of known, valid sequence numbers for that SAID.

7.2.1.6.3 Events

— *Stop:* Sent by the Authorization FSM to an active (non-START state) TEK FSM to terminate TEK FSM and remove the corresponding SAID's keying material from the SS's key table. See Figure 157.

— *Authorized:* Sent by the Authorization FSM to a nonactive (START state) TEK FSM to notify TEK FSM of successful authorization. See Figure 157.

— *Authorization Pending (Auth Pend):* Sent by the Authorization FSM to TEK FSM to place TEK FSM in a wait state while Authorization FSM completes reauthorization. See Figure 157.

— *Authorization Complete (Auth Comp):* Sent by the Authorization FSM to a TEK FSM in the Operational Reauthorize Wait or Rekey Reauthorize Wait states to clear the wait state begun by the prior Authorization Pending event. See Figure 157.

— *TEK Invalid:* This event is triggered by either an SS's data packet decryption logic or by the receipt of a TEK Invalid message from the BS.

An SS's data packet decryption logic triggers a TEK Invalid event if it recognizes a loss of TEK key synchronization between itself and the encrypting BS. For example, an SAID's TEK key sequence number, contained within the received DL MAC PDU header, is out of the SS's range of known sequence numbers for that SAID.

A BS sends an SS a TEK Invalid message, triggering a TEK Invalid event within the SS, if the BS's decryption logic recognizes a loss of TEK key synchronization between itself and the SS.

— *Timeout:* A retry timer timeout. Generally, the particular request is retransmitted.
— *TEK Refresh Timeout:* The TEK refresh timer timed out. This timer event signals the TEK state machine to issue a new Key Request in order to refresh its keying material. The refresh timer is set to fire a configurable duration of time (*TEK Grace Time*) before the expiration of the newer TEK the SS currently holds. This is configured via the BS to occur after the scheduled expiration of the older of the two TEKs.

7.2.1.6.4 Parameters

All configuration parameter values take the default values from Table 555 or may be specified in Auth Reply message.

— *Operational Wait Timeout:* Timeout period between sending of Key Request messages from the Op Wait state (see 11.9.18.4).
— *Rekey Wait Timeout:* Timeout period between sending of Key Request messages from the Rekey Wait state (see 11.9.18.5).
— *TEK Grace Time:* Time interval, in seconds, before the estimated expiration of a TEK that the SS starts rekeying for a new TEK. TEK Grace Time takes the default value from Table 555 or may be specified in a configuration setting within the Auth Reply message and is the same across all SAIDs (see 11.9.18.6).

7.2.1.6.5 Actions

Actions taken in association with state transitions are listed by <event> (<rcvd message>) --> <state>:

1-B Op Wait (*Stop*) → Start

a) Clear Key Request retry timer
b) Terminate TEK FSM

1-C Op Reauth Wait (*Stop*) → Start

a) Terminate TEK FSM

1-D Operational (*Stop*) → Start

a) Clear TEK refresh timer, which is timer set to go off *"TEK Grace Time"* seconds prior to the TEK's scheduled expiration time
b) Terminate TEK FSM
c) Remove SAID keying material from key table

1-E Rekey Wait (*Stop*) → Start

a) Clear Key Request retry timer
b) Terminate TEK FSM
c) Remove SAID keying material from key table

1-F Rekey Reauth Wait (*Stop*) → Start

a) Terminate TEK FSM
b) Remove SAID keying material from key table

2-A Start (*Authorized*) → Op Wait

a) Send Key Request message to BS
b) Set Key Request retry timer to Operational Wait Timeout

3-B Op Wait (*Auth Pend*) → Op Reauth Wait

a) Clear Key Request retry timer

3-E Rekey Wait (*Auth Pend*) → Rekey Reauth Wait

a) Clear Key Request retry timer

4-C Op Reauth Wait (*Auth Comp*) → Op Wait

a) Send Key Request message to BS
b) Set Key Request retry timer to Operational Wait Timeout

4-F Rekey Reauth Wait (*Auth Comp*) → Rekey Wait

a) Send Key Request message to BS
b) Set Key Request retry timer to Rekey Wait Timeout

5-D Operational (*TEK Invalid*) → Op Wait

a) Clear TEK refresh timer
b) Send Key Request message to BS
c) Set Key Request retry timer to Operational Wait Timeout
d) Remove SAID keying material from key table

5-E Rekey Wait (*TEK Invalid*) → Op Wait

a) Clear TEK refresh timer
b) Send Key Request message to BS
c) Set Key Request retry timer to Operational Wait Timeout
d) Remove SAID keying material from key table

5-F Rekey Reauth Wait (*TEK Invalid*) → Op Reauth Wait

a) Remove SAID keying material from key table

6-B Op Wait (*Timeout*) → Op Wait

a) Send Key Request message to BS
b) Set Key Request retry timer to Operational Wait Timeout

6-E Rekey Wait (*Timeout*) → Rekey Wait

a) Send Key Request message to BS
b) Set Key Request retry timer to Rekey Wait Timeout

7-D Operational (*TEK Refresh Timeout*) → Rekey Wait

a) Send Key Request message to BS
b) Set Key Request retry timer to Rekey Wait Timeout

8-B Op Wait (Key Reply) → Operational

a) Clear Key Request retry timer
b) Process contents of Key Reply message and incorporate new keying material into key database
c) Set the TEK refresh timer to go off "TEK Grace Time" seconds prior to the key's scheduled expiration

8-E Rekey Wait (Key Reply) → Operational

a) Clear Key Request retry timer
b) Process contents of Key Reply message and incorporate new keying material into key database
c) Set the TEK refresh timer to go off "TEK Grace Time" seconds prior to the key's scheduled expiration

9-B Op Wait (Key Reject) → Start

a) Clear Key Request retry timer
b) Terminate TEK FSM

9-E Rekey Wait (Key Reject) → Start

a) Clear Key Request retry timer
b) Terminate TEK FSM
c) Remove SAID keying material from key table

7.2.2 PKM Version 2

7.2.2.1 TEK exchange overview for PMP topology

If the SS and BS decide "No authorization" as their authorization policy, the SS and BS shall perform neither SA-TEK handshake nor Key Request/Key Reply handshake. In this case, target SAID value, which may be included in DSA-REQ/RSP messages, shall be Null SAID.

Upon achieving authorization, an SS starts a separate TEK state machine for each of the SAIDs identified in the Authorization Reply or PKMv2 SA-TEK-RSP message, if data traffic encryption is provisioned for one or more service flows. Each TEK state machine operating within the SS is responsible for managing the keying material associated with its respective SAID. TEK state machines periodically send Key Request messages to the BS, requesting a refresh of keying material for their respective SAIDs.

The BS responds to a Key Reply message, containing the BS's active keying material for a specific SAID.

TEKs and KEKs may be either 64 bits or 128 bits long. SAs employing any ciphersuite with a basic block size of 128 bits shall use 128-bit TEKs and KEKs. Otherwise 64-bit TEKs and KEKs shall be used. The name TEK-64 is used to denote a 64-bit TEK and TEK-128 is used to denote a 128-bit TEK. Similarly, KEK-64 is used to denote a 64-bit KEK and KEK-128 is used to denote a 128-bit KEK.

For SAs using a ciphersuite employing DES-CBC, the TEK in the Key Reply is triple DES (3-DES) (encrypt-decrypt-encrypt or EDE mode) encrypted, using a two-key, 3-DES KEK derived from the AK.

For SAs using a ciphersuite employing 128 bits keys, such as AES-CCM mode, the TEK in the Key Reply is AES encrypted using a 128-bit key derived from the AK and a 128-bit block size.

Note that at all times the BS maintains two diversity sets of keying material per SAID. The lifetimes of the two generations overlap so that each generation becomes active halfway through the life of it predecessor and expires halfway through the life of its successor. A BS includes in its Key Replies both of an SAID's active generations of keying material.

For SAs using a ciphersuite employing CBC mode encryption the Key Reply provides the requesting SS, in addition to the TEK and CBC IV, the remaining lifetime of each of the two sets of keying material. For SAs using a ciphersuite employing AES-CCM mode, the Key Reply provides the requesting SS, in addition to the TEK, the remaining lifetime of each of the two sets of keying material. The receiving SS uses these remaining lifetimes to estimate when the BS will invalidate a particular TEK and, therefore, when to schedule future Key Requests so that the SS requests and receives new keying material before the BS expires the keying material the SS currently holds. For AES-CCM mode, when more than half the available PN numbers in the 31-bit PN number space are exhausted, the SS shall schedule a future Key Request in the same fashion as if the key lifetime was approaching expiry. The operation of the TEK state machine's Key Request scheduling algorithm, combined with the BS's regimen for updating and using an SAID's keying material (see 7.3), ensures that the SS will be able to continually exchange encrypted traffic with the BS.

A TEK state machine remains active as long as

a) The SS is authorized to operate in the BS's security domain, i.e., it has a valid AK, and
b) The SS is authorized to participate in that particular SA, i.e., the BS continues to provide fresh keying material during rekey cycles.

The payloads of MAC PDUs sent on connections that belong to an SA that includes data encryption shall be encrypted. A MAC PDU with a payload received on such a connection with the EC bit not set shall be discarded. A MAC PDU without a payload received on such a connection shall be processed if its EC bit is set to 0, and should be discarded if its EC bit is set to 1.

7.2.2.2 Key derivation

The PKMv2 key hierarchy defines what keys are present in the system and how the keys are generated.

Since there are two authentication schemes, one based on RSA and one based on EAP, there are two primary sources of keying material.

The keys used to protect management message integrity and transport the TEKs are derived from source key material generated by the authentication and authorization processes. The RSA-based authorization process yields the pre-Primary AK (pre-PAK) and the EAP based authentication process yields the MSK. Keys used to protect MBS traffic are derived from the MBSAK, which is supplied by means outside the scope of this specification. These keys form the roots of the key hierarchy.

All PKMv2 key derivations are based on the Dot16KDF algorithm as defined in 7.5.4.6.1.

The MSK is the shared "master key" that is derived by the two sides in the course of executing the EAP inner method. The authentication part of the authorization flow (and the involvement of the generic EAP layer) is now complete.

7.2.2.2.1 RSA-based authorization

When the RSA-based authorization is negotiated as authorization policy, the PKMv2 RSA-Request, the PKMv2 RSA-Reply, the PKMv2 RSA-Reject, and the PKMv2 RSA-Acknowledgement messages are used to share the pre-PAK.

The pre-PAK is sent by the BS to the SS encrypted with the public key of the SS certificate. Pre-PAK is mainly used to generate the PAK. The optional EIK for transmitting authenticated EAP payload (see 7.2.2.2.2) are also generated from pre-PAK:

EIK | PAK = Dot16KDF(pre-PAK, SS MAC Address | BSID | "EIK+PAK", 320)

PAK shall be used to generate the AK (see 7.2.2.2.3) if RSA authorization was used. PAK is 160 bits long.

7.2.2.2.2 EAP authentication

If a RSA mutual authorization took place before the EAP exchange, the EAP messages may be protected using EIK-EAP Integrity Key derived from pre-PAK (see 7.2.2.2.1). EIK is 160 bits long.

The product of the EAP exchange that is transferred to IEEE 802.16 layer is the Master Session Key (MSK), which is 512 bits in length. This key is known to the AAA server, to the Authenticator (transferred from AAA server) and to the SS. The SS and the authenticator derive a PMK (Pairwise Master Key) by truncating the MSK to 160 bits.

The PMK derivation from the MSK during first EAP method is as follows:

PMK ⇐ truncate (MSK, 160)

After the successful initial authentication, the SS shall initiate reauthentication prior to expiration of PMK lifetime by sending the PKMv2 EAP Start message signed by H/CMAC_KEY_U derived from the AK. Either the BS or SS may initiate reauthentication at any time prior to expiration of PMK lifetime. After expiration of the PMK lifetime, authentication shall be performed using initial authentication procedures.

7.2.2.2.3 AK derivation

The BS and the SS will share the AK which is derived from the PMK (from EAP-based authorization procedure) and/or the PAK (from RSA-based authorization procedure). Note that PAK and/or PMK can be used according to the value of Authorization Policy Support field included in the SBC-REQ/RSP messages.

After the authorization procedure has been performed, the MS and BS will both posses the PAK.

After the EAP based authentication procedure, the MS and the Authenticator will both possess the PMK.

If both the authorization and EAP based authentication procedure were performed, the MS and the Authenticator will possess both the PAK and PMK. The derivation of the AK varies based on which keys are possessed.

The AK shall be generated as follows:

```
If (PAK and PMK)
        AK ⇐ Dot16KDF (PAK ⊕ PMK, SS MAC Address | BSID | PAK | "AK", 160)
Else
        If (PAK)
                AK ⇐ Dot16KDF (PAK, SS MAC Address | BSID | PAK | "AK", 160)
        Else                    // PMK only
                AK ⇐ Dot16KDF(PMK, SS MAC Address | BSID |  "AK", 160);
        Endif
Endif
```

7.2.2.2.4 KEK derivation

The KEK is derived directly from the AK. The KEK is defined in 7.2.2.2.9. It is used to encrypt the TEKs, GKEK and all other keys sent by the BS to SS in unicast message.

7.2.2.2.5 GKEK derivation

GKEK is randomly generated at the BS or a network entity (for example, an ASA server) and transmitted to the SS encrypted with the KEK. There is one GKEK per Group Security Association. GKEK is used to encrypt the GTEKs sent by the BS to the SSs in the same multicast group or MBS group.

7.2.2.2.6 Traffic encryption key (TEK)

The TEK is generated as a random number in the BS and is encrypted using the corresponding TEK encryption algorithm (e.g., AES key wrap for SAs with TEK encryption algorithm identifier in the cryptographic suite is equal to 0x04), keyed with the KEK and transferred between BS and SS in the TEK exchange.

7.2.2.2.6.1 Counter-based TEK Generation for HO

When both sides (MS and BS) indicate support for Seamless Handover, the TEKs, during handover, shall be generated by the BS and MS respectively using the following formula:

TEKi= Dot16KDF (KEK_prime, CMAC_KEY_COUNT_T | SAID | "TEKi Generation", 128)

In the above formula, KEK_prime is a simple transformation of KEK in order to cryptographically isolate the KEK used for encrypting the TEK (legacy) from KEK' used for generating the TEKs during HO. KEK' is computed as follows: KEK_prime = Dot16KDF(KEK, "KEK for TEK Generation", 128).

The generated TEKs shall not be transferred between the BS and MS.

In the above equation, CMAC_KEY_COUNT_T (CMAC_KEY_COUNT for Traffic) is defined as follows: After the exchange of RNG-REQ and RNG-RSP messages that is used to establish a value for the CMAC_KEY_COUNT at the MS and the BS, CMAC_KEY_COUNT_T = CMAC_KEY_COUNT. During handover before the exchange of RNG-REQ and RNG-RSP messages, $CMAC\_KEY\_COUNT\_T_M$ = $CMAC\_KEY\_COUNT_M$ + 1 and $CMAC\_KEY\_COUNT\_T_B$ = $CMAC\_KEY\_COUNT_N$, where $CMAC\_KEY\_COUNT\_T_M$ and $CMAC\_KEY\_COUNT\_T_B$ are the values of CMAC_KEY_COUNT_T at the MS and the BS respectively.

Both the MS and the BS shall compute the TEKs based on the current values of CMAC_KEY_COUNT_T. Initially, TEK0 and TEK1 Lifetimes are updated based on the value of the "TEK Lifetime" parameter sent to the MS in BSHO-REQ/RSP during handover preparation. More specifically, the lifetime of TEK0 is set to

"TEK Lifetime"/2 and the lifetime of TEK1 is set to "TEK_Lifetime." PN0, PN1, RxPN0, and RxPN1 shall be initialized to 0.

During handover, before any transmission of data between the MS and the target BS, the MS shall set $CMAC\_KEY\_COUNT\_T_M = CMAC\_KEY\_COUNT_M + 1$ and the target BS shall set $CMAC\_KEY\_COUNT\_T_B = CMAC\_KEY\_COUNT_N$. Unless the MS has cached a TEK context associated with the target BS and the current value of $CMAC\_KEY\_COUNT\_T_M$, the MS shall generate new values for the TEKs using the above formula. Unless the target BS has cached a TEK context associated with the MS and the current value of $CMAC\_KEY\_COUNT\_T_B$, the BS shall generate new values for the TEKs using the above formula. Otherwise the MS and BS shall apply the TEKs and associated parameters, including PN windows, from the cached contexts.

Occasionally, $CMAC\_KEY\_COUNT\_T_M$ and $CMAC\_KEY\_COUNT\_T_B$ are not equal, in which case the generated TEKs will be different too. In such cases, the target BS may attempt self-synchronizing the value of $CMAC\_KEY\_COUNT\_T_B$ by increasing the value until it can properly decode UL traffic.

If the target BS receives a valid RNG-REQ message including a CMAC_KEY_COUNT TLV (see 7.2.2.2.9.1) from the MS, and the received CMAC_KEY_COUNT value is different from $CMAC\_KEY\_COUNT\_T_B$, it shall set $CMAC\_KEY\_COUNT\_T_B$ to the received CMAC_KEY_COUNT value and regenerate new values for the TEKs using the above formula.

If the handover is not completed at the target BS, the target BS shall cache the TEK context until it can determine that $CMAC\_KEY\_COUNT_N$ has been incremented (e.g., by receiving a backbone message from the Authenticator). Likewise, the MS shall cache the TEK context until it increments $CMAC\_KEY\_COUNT_M$. See 7.2.2.2.9.1 for further details on CMAC_KEY_COUNT handling.

7.2.2.2.7 Group traffic encryption key (GTEK)

The GTEK is used to encrypt data packets of the multicast service or the MBS and it is shared among all SSs that belong to the multicast group or the MBS group. There are two GTEKs per GSA.

The GTEK is randomly generated at the BS or at certain network node and is encrypted using same algorithms applied to encryption for TEK and transmitted to the SS in broadcast or unicast messages. The GTEK in a PKMv2 Key-Reply message shall be encrypted by the KEK. Also, the GTEK in a PKMv2 Group Key Update Command message shall be encrypted by the GKEK.

7.2.2.2.8 MBS traffic key (MTK)

The generation and transport of the MAK (MBS AK) is outside the scope of the IEEE 802.16 standard. It is provided through means defined at higher layers. However, the key such as the MTK is used in the link cipher; therefore, its existence needs to be defined in layer 2.

The MTK is used to encrypt the MBS traffic data. It is defined as follows:

$$MTK \Leftarrow Dot16KDF(MAK, MGTEK \mid \text{"MTK"}, 128)$$

The MGTEK is the GTEK for the MBS. An SS can get the GTEK by exchanging the PKMv2 Key Request message and the PKMv2 Key Reply message with a BS or by receiving the PKMv2 Group-Key-Update-Command message from a BS. The generation and transport of the GTEK is defined as in 6.3.2.3.9 and 7.9.

7.2.2.2.9 Message authentication keys (HMAC/CMAC) and KEK derivation

7.2.2.2.9.1 CMAC_KEY_COUNT_ management

The MS shall maintain a CMAC_KEY_COUNT counter for each PMK context, and the Authenticator is assumed to maintain a CMAC_KEY_COUNT counter for each PMK context, which is normally kept synchronized with the corresponding counter at the MS.

The value of this counter maintained by the MS is denoted as $CMAC\_KEY\_COUNT_M$ and the value maintained by the Authenticator is denoted as $CMAC\_KEY\_COUNT_N$. Each AK context that a BS maintains has a CMAC_KEY_COUNT value, which is denoted $CMAC\_KEY\_COUNT_B$.

7.2.2.2.9.1.1 Maintenance of $CMAC\_KEY\_COUNT_M$ by the MS

Upon successful completion of the PKMv2 Authentication or Re-authentication, and establishment of a new PMK, the MS shall instantiate a new CMAC_KEY_COUNT counter and set its value to zero. In particular, this shall occur upon reception of the SA TEK Challenge message. The MS shall initiate re-authentication before the $CMAC\_KEY\_COUNT_M$ reaches its maximum value of 65535. The MS shall manage a separate $CMAC\_KEY\_COUNT_M$ counter for every active PMK context. Specifically, during re-authentication, after EAP completion, but before the activation of the new AK, the old $CMAC\_KEY\_COUNT_M$ (corresponding to the old PMK) shall be used for CMAC generation of MAC control messages, while the new $CMAC\_KEY\_COUNT_M$ shall be used for CMAC generation for PKMv2 3-way handshake messages.

7.2.2.2.9.1.1.1 CMAC_KEY_LOCK state

When the MS decides to reenter the network or perform Secure Location Update (immediately prior to transmitting a RNG-REQ for re-entry or Secure Location Update to a first preferred BS), or handover to a target BS (immediately prior to transmitting RNG-REQ for handover to a first target BS), the MS shall perform the following steps in the stated order:

1) If the MS is handing over to a target BS, it shall cache the current values of $CMAC\_KEY\_*_{Serving\ BS}$ and $CMAC\_PN\_*_{Serving\ BS}$ used at the serving BS.
2) The MS shall increment the $CMAC\_KEY\_COUNT_M$ counter.
3) The MS shall enter the CMAC_Key_Lock state.

For each BS to which it sends a RNG-REQ message for the first time while in the CMAC_Key_Lock state, the MS shall re-compute new values of $CMAC\_KEY\_*_{Preferred\ BS/Target\ BS}$ based on the $CMAC\_KEY\_COUNT_M$ value and reset the $CMAC\_PN\_*_{Preferred\ BS/Target\ BS}$ counter values to zero.

While in the CMAC_Key_Lock state, the MS shall cache the values of the $CMAC\_PN\_*_{Preferred\ BS/Target\ BS}$ counters and $CMAC\_KEY\_*_{Preferred\ BS/Target\ BS}$ corresponding to each preferred or target BS to which it has sent an RNG REQ message. The MS shall update and use these cached values for any subsequent message exchange with the same target or preferred BS while in the CMAC_Key_Lock state.

When the MS has completed network reentry at a preferred BS or has completed handover to a target BS (in either case establishing the preferred BS or target BS as the new serving BS) or the MS has completed Secure Location Update, or the MS cancels handover and remains connected to its current serving BS, the MS shall exit the CMAC_Key_Lock state.

Upon exit of the CMAC_Key_Lock state, the MS may purge the cached values of CMAC_PN_* and CMAC_KEY* for all BSs other than the serving BS.

7.2.2.2.9.1.2 Processing of $CMAC\_KEY\_COUNT_B$ by the BS

The BS may possess one or more AK contexts associated with the MS, each of which includes the value of $CMAC\_KEY\_COUNT_B$. This value shall be maintained as specified in subsequent paragraphs of this subclause.

Upon successful completion of the PKMv2 Authentication or Re-authentication, and establishment of a new AK context, the BS shall set $CMAC\_KEY\_COUNT_B$ of the corresponding newly instantiated AK context to zero. In particular, this shall occur immediately prior to the transmission of the SA TEK Challenge message. The BS shall manage a separate $CMAC\_KEY\_COUNT_B$ for every AK context it is maintaining. Specifically, during re-authentication, after EAP completion, but before the activation of the new AK, the old $CMAC\_KEY\_COUNT_B$ (corresponding to the old AK context) shall be used for CMAC generation of MAC control messages, while the new $CMAC\_KEY\_COUNT_B$ shall be used for CMAC generation for PKMv2 3-way handshake messages.

Upon receiving the RNG-REQ message from the MS containing the CMAC_KEY_COUNT TLV, the BS shall compare the received CMAC_KEY_COUNT value, which is $CMAC\_KEY\_COUNT_M$, with $CMAC\_KEY\_COUNT_B$. If the BS has no AK context for the MS corresponding to the AK of the CMAC tuple TLV in the received RNG-REQ message it shall create an AK context and set the $CMAC\_KEY\_COUNT_B$ to $CMAC\_KEY\_COUNT_N$ (i.e., the value of CMAC_KEY_COUNT counter maintained by the Authenticator for the corresponding PMK context).

If $CMAC\_KEY\_COUNT_M < CMAC\_KEY\_COUNT_B$, the BS shall process the message as having an invalid CMAC tuple and send a RNG-RSP message requesting re-authentication; see subclauses 6.3.23.8.2.1 and 6.3.21.2.7.

If $CMAC\_KEY\_COUNT_B < CMAC\_KEY\_COUNT_M$, the BS shall cache the state of the AK context, generate the CMAC_KEY_* using $CMAC\_KEY\_COUNT_M$, set CMAC_PN_* to zero, and validate the received RNG-REQ message. If it is valid, the BS may purge the cached state, and shall set $CMAC\_KEY\_COUNT_B = CMAC\_KEY\_COUNT_M$, update the AK context and send a RNG-RSP message to the MS including a CMAC tuple TLV. The BS shall cache the AK context in case it receives subsequent MAC management messages from the MS. When the BS can determine that the MS has exited the CMAC_Key_Lock state associated with $CMAC\_KEY\_COUNT_M$ and if it is not serving the MS, it may purge the cached AK context. If the CMAC value is not valid, the BS shall send a RNG-RSP message requesting re-authentication; refer to subclauses 6.3.23.8.2.1 and 6.3.21.2.7.

If $CMAC\_KEY\_COUNT_B = CMAC\_KEY\_COUNT_M$, the BS shall validate the received RNG-REQ using the cached AK context. If the CMAC value is valid, the BS shall send the RNG-RSP message to the MS allowing legitimate entry. If the CMAC value is invalid, the BS shall send a RNG-RSP message requesting re-authentication; refer to subclauses 6.3.23.8.2.1 and 6.3.21.2.7.

Once the MS has completed network re-entry, cancelled handover, or completed Secure Location Update, the BS is assumed to inform the Authenticator and send to it the value of $CMAC\_KEY\_COUNT_M$.

7.2.2.2.9.2 Derivation of message authentication codes

Message authentication code keys are used to sign management messages in order to validate the authenticity of these messages. The message authentication code to be used is negotiated at SS Basic Capabilities negotiation.

There is a different key for UL and DL messages. Also, a different message authentication key is generated for a broadcast message (this is DL direction only) and for a unicast message.

In general, the message authentication keys used to generate the CMAC value and the HMAC-Digest are derived from the AK.

An alternative method of CMAC key generation, namely CMAC-0, may be used in the limited mobility environments as described in Annex I.

The keys used for CMAC key and for KEK are as follows:

CMAC_PREKEY_U | CMAC_PREKEY_D | KEK ⇐ Dot16KDF(AK, SS MAC Address | BSID | "CMAC_KEYS+KEK", 384)
CMAC_KEY_GD ⇐ Dot16KDF(GKEK, "GROUP CMAC KEY",128) (Used for broadcast MAC message such as a PKMv2 Group-Key-Update-Command message)

$CMAC\_KEY\_U \Leftarrow AES_{CMAC\_PREKEY\_U}(CMAC\_KEY\_COUNT)$

$CMAC\_KEY\_D \Leftarrow AES_{CMAC\_PREKEY\_D}(CMAC\_KEY\_COUNT)$

For a fixed SS, the CMAC_KEY_COUNT shall be set to 0 in the derivation of the CMAC_KEY_U and CMAC_KEY_D at the BS and the SS.

Specifically, the preprocessed value of CMAC_PREKEY_* is treated as the Cipher Key of the Advanced Encryption Standard (AES) algorithm AES128 (FIPS197). The CMAC_KEY_COUNT is treated as the Input Block Plain Text of this algorithm. The AES128 algorithm is executed once. The Output Block Cipher Text of this algorithm is treated as the resulting CMAC_KEY_*. When CMAC_KEY_COUNT is used as an input of AES128 algorithm, 112 zero bits are prepadded before the 16-bit CMAC_KEY_COUNT where the CMAC_KEY_COUNT is regarded as most-significant-bit first order. The AES input is also defined as most-significant-bit first order.

The keys used for HMAC key and for KEK are as follows:

HMAC_KEY_U | HMAC_KEY_D | KEK ⇐ Dot16KDF(AK, SS MAC Address | BSID | "HMAC_KEYS+KEK", 448)
HMAC_KEY_GD ⇐ Dot16KDF(GKEK, "GROUP HMAC KEY", 160) (Used for broadcast MAC message such as a PKMv2 Group-Key-Update-Command message)

Exceptionally, the message authentication keys for the HMAC/CMAC Digest included in a PKMv2 Authenticated-EAP-Transfer message are derived from the EIK instead of the AK.

The keys used for CMAC key and for KEK are as follows:

CMAC_KEY_U | CMAC_KEY_D ⇐ Dot16KDF(EIK, SS MAC Address | BSID | "CMAC_KEYS", 256)

The keys used for HMAC key and for KEK are as follows:

HMAC_KEY_U | HMAC_KEY_D ⇐ Dot16KDF(EIK, SS MAC Address | BSID | "HMAC_KEYS", 320)

7.2.2.2.10 Key hierarchy

Figure 159 outlines the process to calculate the AK when the RSA-based authorization process has taken place, but where the EAP based authentication process has not taken place, or the EAP method used has not yielded an MSK.

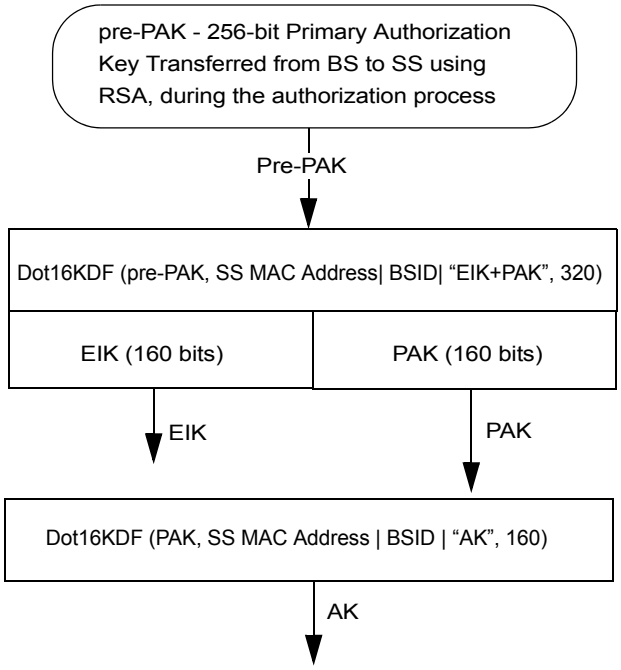

Figure 159—AK from PAK only (from RSA-based authorization)

Figure 160 outlines the process to calculate the AK when both the RSA-based authorization exchange has taken place, yielding a PAK and the EAP based authentication exchange has taken place, yielding an MSK.

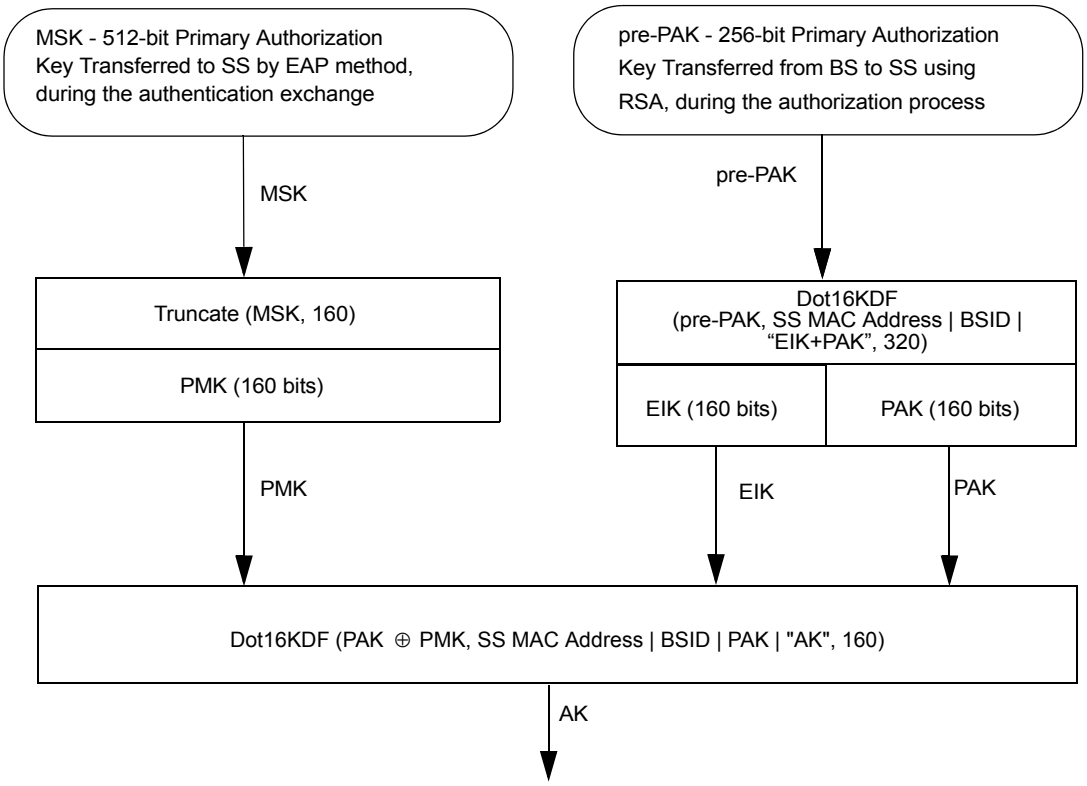

Figure 160—AK from PAK and PMK (RSA-based and EAP-based authorization)

Figure 161 outlines the process to calculate the AK when only the EAP based authentication exchange has taken place, yielding an MSK.

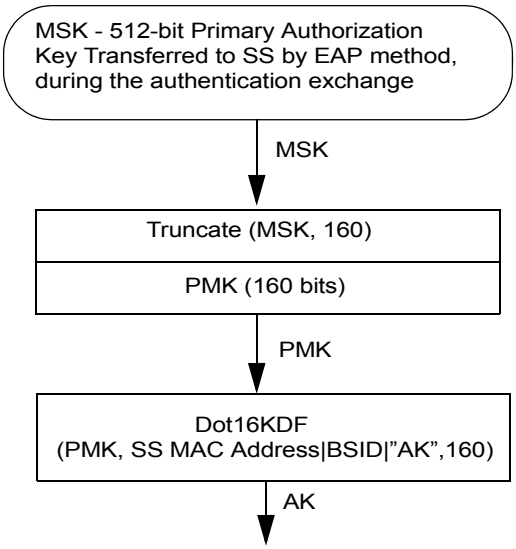

Figure 161—AK from PMK (from EAP-based authorization)

Figure 162 outlines the unicast key hierarchy starting from the AK.

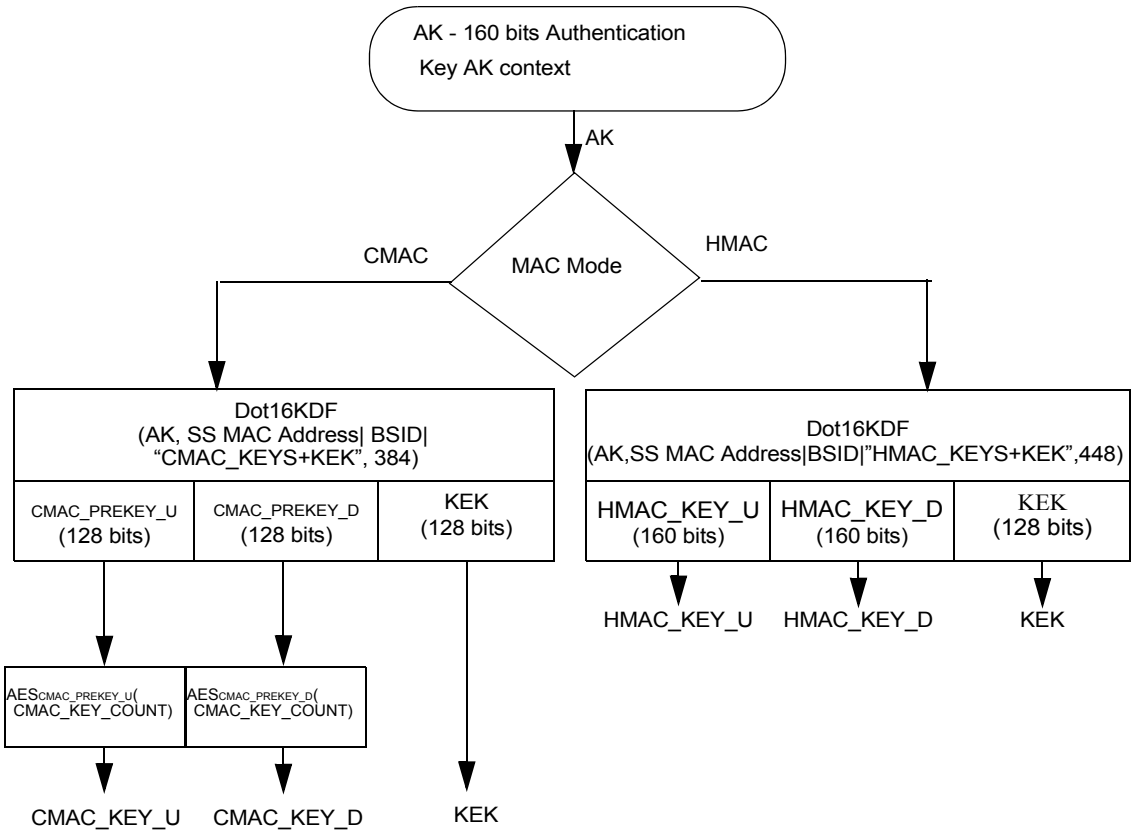

Figure 162—HMAC/CMAC/KEK derivation from AK

Figure 163 outlines the MBS key hierarchies starting from the MAK.

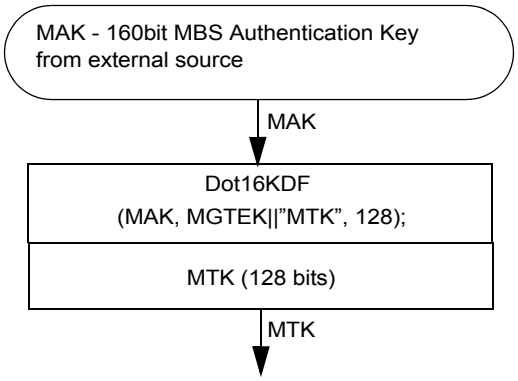

Figure 163—MTK key derivation from MAK

7.2.2.2.11 Maintenance of PMK and AK

The BS and SS maintain cached PMK and AK as follows:

a) *PMK caching.* An SS caches a PMK upon successful EAP authentication. An Authenticator caches a PMK upon its receipt via the AAA protocol. Upon caching a new PMK for a particular SS, an Authenticator shall delete any PMK for that SS (as well as all associated AKs).

   For the case of reauthentication, deletion of old PMKs at Authenticator and SS is accomplished via the switchover mechanism described in this subclause using the messages in 6.3.2.3.9.20.

   The Authenticator and SS will additionally delete PMKs and/or associated AKs in various situations—including lifetime expiration, reauthentication, and reclamation of memory resources, or as the result of other mechanisms beyond the scope of this specification.

   In the case of reauthentication, the older PMK and its AKs shall be deleted by the SS and the BS after successful completion of the 3-way SA-TEK handshake (7.8.1).

b) *AK activation and deactivation.* Successful completion of the 3-way SA-TEK handshake causes the activation of every AK associated with the new PMK and any BS under the current Authenticator (i.e., when the MS hands over or re-enters a target BS, and the 3-way SA-TEK handshake associated with the current PMK has completed successfully at some BS under the target BS's Authenticator, the AK associated with the current PMK and the target BS is used without a new 3-way SA-TEK handshake at the target BS).

   If the packet counter belonging to a short HMAC or a CMAC key reaches its maximum value, the associated AK becomes permanently deactivated.

   The BS and SS shall maintain the AK context (i.e., replay counters etc.) as long as they retain the AK.

c) *Legacy mobiles.* To handle legacy mobiles and base stations that were developed in accordance with IEEE Std 802.16e-2005/Cor1, a compatible but not for standard implementation solution is presented in Annex I.

7.2.2.2.12 PKMv2 PMK and AK switching methods

Once the PKMv2 SA-TEK 3-way handshake begins, the BS and SS shall use the new AK matching the new PMK context for the 3-way handshake messages. Other messages shall continue to use the old AK until the 3-way handshake completes successfully. Upon successful completion of the 3-way handshake, all messages shall use the new AK.

The old AK matching the old PMK context may be used for receiving packets before the "frame number" attribute specified in PKMv2 SA-TEK-response message.

7.2.2.3 Associations

Keying material is held within associations. There are three types of association: The security associations (SA) that maintain keying material for unicast connections; group security associations (GSAs) that hold keying material for multicast groups; and multicast and broadcast service group security associations (MBSGSAs) that hold keying material for MBSs.

If SS and BS decide "No authorization" as their authorization policy, they do not have any security association. In this case, Null SAID shall be used as the target SAID field in DSA-REQ/RSP messages.

If authorization is performed but the MS and BS decide to create an unprotected SF, the Null SAID may be used as the target SAID field in DSA-REQ/RSP messages.

7.2.2.3.1 Security associations (SAs)

A SA contains keying material that is used to protect unicast connections. The contents of an SA are as follows:

— The SAID, a 16-bit identifier for the SA. The SAID shall be unique within a BS.
— The KEK, a 128-bit key encryption key, derived from the AK.
— TEK0 and TEK1, 128-bit traffic encryption keys, generated within the BS and transferred from the BS to the SS using a secure key exchange.
— The TEK Lifetimes TEK0 and TEK1, a key aging lifetime value.
— PN0 and PN1, 32-bit packet numbers for use by the link cipher.
— RxPN0 and RxPN1, 32-bit receive sequence counter, for use by the link cipher.

A security association is shared between an SS and a BS or, in case of ongoing MDHO(FBSS) between MS and BSs from Diversity Set.

7.2.2.3.2 Group security associations (GSAs)

The GSA contains keying material used to secure multicast groups. These are defined separately from SAs since GSA offer a lower security bound than unicast security associations, since keying material is shared between all members of the group, allowing any member of the group to forge traffic as if it came from any other member of the group.

The contents of a GSA are as follows:

— The GKEK, which serves the same function as an SA KEK but for a GSA.
— The GTEK, which served the same function as an SA TEK but for a GSA.

7.2.2.3.3 Multicast and broadcast service group security associations (MBSGSAs)

The primary keying material in the MBSGSA is the MAK. The MAK is provisioned by an external entity, such as an MBS server. The MAK may be common among members of an MBS group.

The contents of an MBSGSA are as follows:

— The MAK, a 160-bit MBS AK, serves the same function as the AK but local to the MBSGSA.
— The MGTEK, a 128-bit MBS GTEK, used indirectly to protect MBS traffic. It is updated more frequently than the MAK.
— The MTK (MBS Traffic Key) a 128-bit key used to protect MBS traffic, derived from the MAK and MGTEK.

The MGTEK is a random number provisioned by the access network such as a BS as an access network AK. It is only used for generating MTK together with MAK.

In an MBSGSA, the usage of MGTEK is same as that of GTEK.

Key encryption algorithm and key transport mechanism of GTEK shall be also applied for MGTEK.

7.2.2.4 Security context

The security context is a set of parameters linked to a key in each hierarchy that defines the scope while the key usage is considered to be secure.

Examples of these parameters are key lifetime and counters ensuring the same encryption will not be used more than once. When the context of the key expires, a new key should be obtained to continue working.

The purpose of this subclause is to define the context that belongs to each key, how it is obtained and the scope of its usage.

7.2.2.4.1 AK context

The PMK key has two phases of lifetime: the first begins at PMK creation and the second begins after validation by the 3-way handshake.

The phases ensure that when the PMK is created it will be defined with the PMK or PAK pre-handshake lifetime and after successful 3-way handshake, this lifetime may be enlarged using the PMK lifetime TLV within the 3-way handshake.

For the HMAC and short-HMAC modes, if the cached AK and associated context is lost by either BS or SS, no new AKs can be derived from this PMK on HO.

Cached AKs that were derived from the PMK can continue to be used in HO.

Reauthentication is required to obtain a new PMK so new AKs can be derived.

The AK context is described in Table 204.

Table 204—AK Context in PKMv2

Parameter	Size (bit)	Usage
AK	160	The authorization key, calculated as defined in 7.2.2.2.3.
AKID	64	Authorization key = Dot16KDF(AK, 0b0000|AK SN|SS MAC Address|BSID|"AK", 64) The AK SN in the Dot16KDF function is encoded in MSB first order.
AK Sequence Number	4	Sequence number of root keys (PAK, PMK) for the AK. The AK SN is the most significant 2 bits of the PAK SN concatenated with the least significant 2 bits of the PMK SN. If AK = f (PAK and PMK), then AK SN = PAK SN + PMK SN If AK = f (PAK), then AK SN = PAK SN If AK = f (PMK), then AK SN = PMK SN
AK Lifetime	—	The time this key is valid. If AK = f (PAK and PMK), then AK lifetime = MIN(PAK lifetime, PMK lifetime) If AK = f (PAK), then AK lifetime = PAK lifetime If AK = f (PMK), then AK lifetime = PMK lifetime. Before this expires, when AK Grace time expires, re-authentication is needed.
PAK Sequence Number	4	The sequence number of the PAK that this AK is derived from. If RSA authentication is not used, this value shall be set to zero.
PMK Sequence Number	4	The sequence number of the PMK from which this AK is derived. If EAP authentication is not used, this value shall be set to zero.
HMAC/CMAC_KEY_U	160/128	The key that is used for signing UL management messages.

Table 204—AK Context in PKMv2 *(continued)*

HMAC/CMAC_PN_U	32	Used to avoid UL replay attack on the management connection before this expires, re-authentication is needed. The initial value of CMAC_PN_U is zero and the value of CMAC_PN_U is reset to zero whenever CMAC_KEY_COUNT is increased.
HMAC/CMAC_KEY_D	160/128	The key that is used for signing DL management messages.
HMAC/CMAC_PN_D	32	Used to avoid DL replay attack on the management connection before this expires, re-authentication is needed. The initial value of CMAC_PN_D is zero and the value of CMAC_PN_D is reset to zero whenever C MAC_KEY_COUNT is increased.
KEK	128	Used to encrypt transport keys from the BS to the SS.
EIK	160	EAP Integrity Key.
CMAC_KEY_COUNT	16	Value of the Entry Counter that is used to guarantee freshness of computed CMAC_KEY_* with every entry and provide replay protection.

7.2.2.4.2 GKEK context

The GKEK is the head of the group key hierarchy. There is a separate GKEK for each group (each GSA). This key is randomly generated by the BS and transferred to the SS encrypted with KEK. It is used to encrypt group TEKs (GTEK) when broadcasting them to all SSs. The GKEK context is described in Table 205.

Table 205—GKEK Context

Parameter	Size (bit)	Usage
GKEK	128	Randomly generated by BS and transmitted to SS under KEK.
GKEK lifetime	32	Arrives from BS with GKEK; when this expires a new GKEK should be obtained.
HMAC_KEY_GD/ CMAC_KEY_GD	160 or 128	The key that is used for signing group DL GTEK update messages, calculated by KDF(CMAC_PAD, GKEK).
HMAC_PN_G/ CMAC_PN_G	32	Used to avoid DL replay attack on management. When this expires a new GKEK should be obtained.
GKEK sequence number	4	The sequence number of the GKEK. The new GKEK sequence number shall be one greater than the preceding GKEK sequence number

GKEK or KEK can be used for encrypting MGTEK for MBS GSA.

7.2.2.4.3 PMK context

The PMK context includes all parameters associated with the PMK. This context is created when EAP Authentication completes.

The PMK context is described in Table 206.

Table 206—PMK context

Parameter	Size (bit)	Usage
PMK	160	A key yielded from the EAP-based authentication.
PMK sequence number	4	PMK sequence number, when the EAP-based authorization is achieved and a key is generated. The 2 LSBs are the sequence counter. And the 2 MSBs set to 0.

7.2.2.4.4 PAK context

The PAK context includes all parameters associated with the PAK. This context is created when RSA Authentication completes.

The PAK context is described in Table 207.

Table 207—PAK context

Parameter	Size (bit)	Usage
PAK	160	A key yielded from the EAP-based authentication.
PAK Lifetime	32	PAK lifetime, from when the RSA-based authorization is achieved. The value of PAK lifetime is initially set to a default value. The 3-way handshake may subsequently change this value.
PAK sequence number	4	PAK sequence number, when the RSA-based authorization is achieved and a key is generated. The 2 MSBs are the sequence counter. And the 2 LSBs set to 0.

7.2.2.5 Authentication state machine

The Authentication state machine for single EAP authentication consists of six states and sixteen events (including receipt of messages and events from other FSMs) that may trigger state transitions. The Authentication state machine is presented in both a state flow diagram (Figure 164) and a state transition matrix (Table 208). The state transition matrix shall be used as the definitive specification of protocol actions associated with each state transition.

The Authentication process has two phases: EAP phase and 3-way handshake phase (also known as SA_TEK exchange).

The EAP phase is controlled by the EAP_FSM as defined in IETF RFC3748 and IETF RFC4173 and it is out of scope in this standard.

The Auth_FSM is responsible for all PKM phase but the actual EAP exchange and communicates with other FSMs in the system using events.

The relationships between the security related FSMs in the system are as described in the Figure 164.

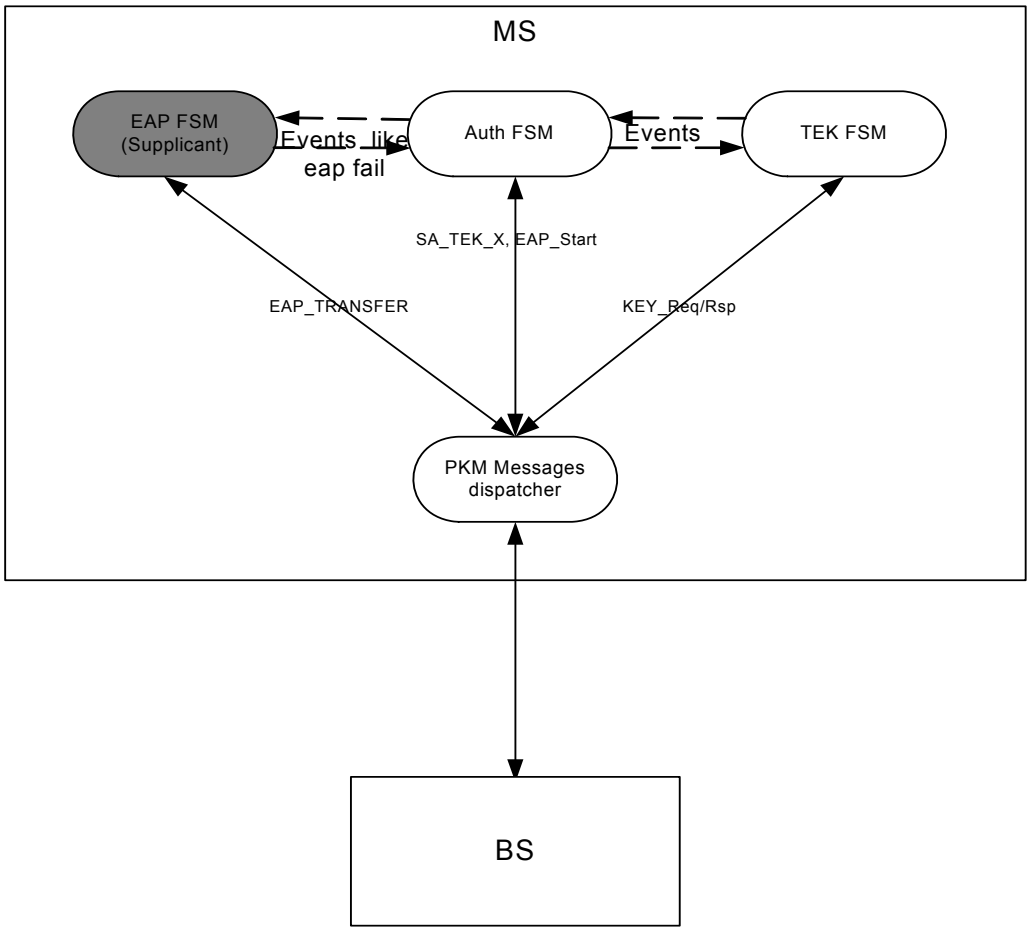

Figure 164—System relationships in security related FSM

Through operation of an Authentication state machine, the MS attempts to get authenticated with the NW, maintain this authentication and support Authentication context switching for HO and Idle situations. The state machine takes care of getting authenticated with the NW, ensuring re-authentication will occur before authentication expires and support key derivations according to support optimized re-entry for HO and idle.

The optimized re-entry support is done in a special state in which the NW connection is suspended and therefore re-authentication cannot occur, the triggers for re-authentication continue to work in this state but the initiation is done only after returning to an authenticated state.

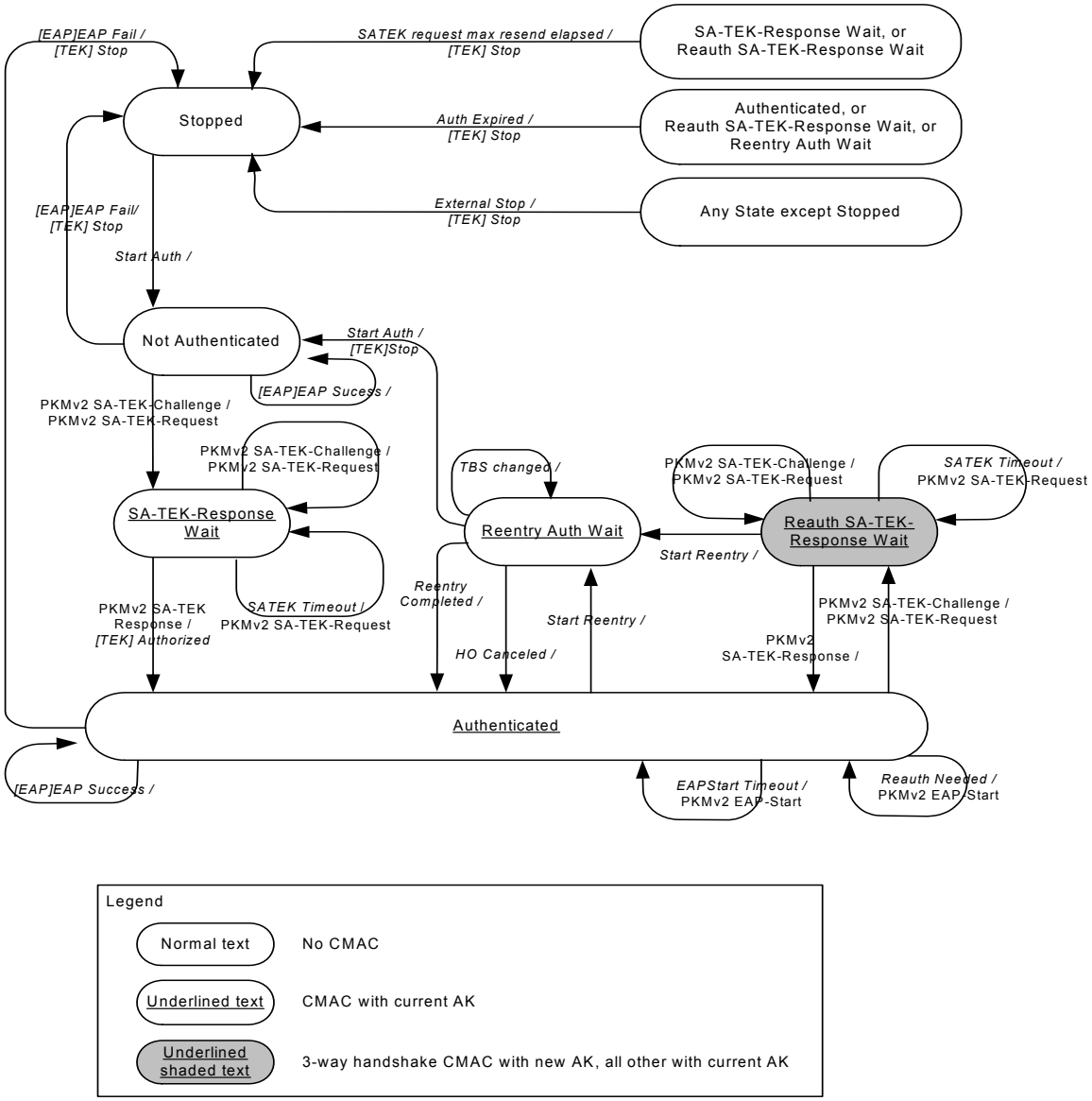

Figure 165—Authentication State Machine for PKMv2 single EAP

Table 208—Authentication FSM state transition matrix for PKMv2

State Event or receive message	(A) *Stopped*	(B) *Not Authenticated*	(C) *SA_TEK Rsp Wait*	(D) *Authenticated*	(E) *Reauth SA-TEK-RSP Wait*	(F) *Reentry Auth Wait*
(1) *Start Auth*	Not authenticated					Not authenticated
(2) *PKMv2 SA-TEK-Chal-lenge*		SA-TEK-Rsp Wait	SA-TEK-Rsp Wait	Reauth SA_TEK-Rsp Wait	Reauth SA-TEK-RSP Wait	
(3) *PKMv2 SA-TEK-Response*			Authenticated		Authenticated	
(4) *EAP Suc-cess*		Not Authenticated		Authenticated		
(5) *SATEK Timeout*			SA-TEK Rsp Wait		Reauth SA-TEK-Rsp Wait	
(6) *SATEK req max resend elapsed*			Stopped		Stopped	
(7) *ReAuth needed*				Authenticated		
(8) *Start Reentry*				Reentry Auth Wait	Reentry Auth Wait	
(9) *EAPStart timeout*				Authenticated		
(10) *HO cancelled*						Authenticated
(11) *TBS change*						Reentry Auth Wait
(12) *Reentry Completed*						Authenticated
(13) *Auth Expired*				Stopped	Stopped	Stopped
(14) *EAP Fail*		Stopped		Stopped		
(15) *External Stop*		Stopped	Stopped	Stopped	Stopped	Stopped

7.2.2.5.1 States

Stopped: This is the initial state of the FSM. Nothing is done in this state.

Not Authenticated: The Authorization FSM is not authenticated and waiting for an MSK from the EAP FSM to perform 3-way handshake. The FSM also waits for a PKMv2 SA-TEK-Challenge message in this state. Upon receiving a PKMv2 SA-TEK-Challenge message, the MS validates H/CMAC Digest using H/CMAC_KEY_D. Any PKMv2 SA-TEK-Challenge messages with invalid H/CMAC Digest or without H/CMAC Digest are discarded.

SA-TEK-Response Wait: The Authorization FSM has sent a PKMv2 SA-TEK-Request and waits for a PKMv2 SA-TEK-Response message in this state. If it does not receive a PKMv2 SA-TEK-Response message within SATEK Timer, the MS may resend the message up to SATEKRequestMaxResends times. Upon receiving a PKMv2 SA-TEK-Challenge message, the MS resends a PKMv2 SA-TEK-Request message. Any PKMv2 SA-TEK-Challenge or SA-TEK-Response messages with invalid H/CMAC Digest or without H/CMAC Digest are discarded.

Authenticated: The MS has successfully completed EAP-based authentication and has valid PMK context and AK context derived from the MSK from the EAP FSM. Transition from SA-TEK-Response Wait into this state triggers the creation of TEK FSMs.

If the MS has a valid AK context, all the management messages with Basic CID or Primary Management CID should be sent with H/CMAC Digest/Tuple. It should be discarded if the message does not have a valid H/CMAC Digest/Tuple. In this state the MS may hold two AK contexts: the old AK context and the new AK context which is created during re-authentication. The old AK context is deleted in the frame number specified in the PKMv2 SA-TEK-Response message. In addition, the Authorization FSM also waits for a PKMv2 SA-TEK-Challenge message in this state before the AK expires.

Reauth SA-TEK-Response Wait: The Authorization FSM has sent a PKMv2 SA-TEK-Request message for re-authentication and waits for a PKMv2 SA-TEK-Response message. If it does not receive a PKMv2 SA-TEK-Response message within SATEK Timer, the MS may resend the message up to SATEKRequestMaxResends times.

In this state there are two AK contexts: the old AK context for the management messages which need H/CMAC-Tuple and new AK context for 3-way handshake messages during re-authentication. The new AK context is created as soon as EAP phase is completed. After the completion of the 3-way handshake, the new AK context should be used.

Reentry Authentication Wait: In this state the Authorization FSM has the AK context of the target BS. The MS should have the AK context of the target BS in this state before it sends a RNG-REQ message with H/CMAC Tuple during HO or reentry. During HO or reentry, the Authorization FSM is in this state when the MS sends a RNG-REQ message. The state of Authorization FSM changes when the MS receives a RNG-RSP message. The next state depends on the value of HO Process Optimization TLV included in the received RNG-RSP message. If HO Process Optimization Bit 1 set to zero, meaning the PKM Authentication phase is not omitted, the Authorization FSM receives Start Authentication event which triggers to stop all the TEK FSMs, re-initialize the Authorization FSM and change the state to Not Authenticated. The TLVs included in the RNG-RSP message also affects the next state. If HO Process Optimization Bit 1 and Bit 2 set to one and zero respectively and the SA-TEK-Update TLV is included in the RNG-RSP, the FSM receives Reentry Completed event. The state of the Authorization FSM changes to Authenticated when the Reentry Completed event is issued.

7.2.2.5.2 Messages

PKMv2 SA-TEK-Challenge: The first message of 3-way handshake. It is sent from the BS to the MS after EAP-based authentication has finished and it is protected by H/CMAC-Digest using H/CMAC_KEY_D of the last EAP-based authentication.

PKMv2 SA-TEK-Request: The second message of 3-way handshake. It is sent from the MS to the BS as a response to a PKMv2 SA-TEK-Challenge message, protected by CMAC-Digest using H/CMAC_KEY_U of the last EAP-based authentication.

PKMv2 SA-TEK-Response: The last message of 3-way handshake. It is sent from the BS to the MS as a response to a PKMv2 SA-TEK-Request message and it is protected by CMAC-Digest using H/CMAC_KEY_D of the last EAP-based authentication.

PKMv2 EAP Start: The message used by the MS to initiate EAP-based re-authentication. If the BS does not respond with PKMv2 EAP Transfer messages, the MS resends it to start re-authentication.

PKMv2 EAP Transfer: This message is bidirectional and used for transmission of EAP packet. This message is sent unprotected in "Not Authenticated" state. In Authenticated state, H/CMAC Digest and Key Sequence Number attributes shall be included in the message.

7.2.2.5.3 Events

Start Authentication: After completion of basic capabilities negotiation, this event is generated to start the Authentication state machine. It is also issued when the HO Process Optimization Bit 1 of the RNG-RSP message is set to zero during HO or network reentry.

EAP Success: EAP FSM generates this event to notify the Authorization FSM that EAP protocol has been completed successfully.

SATEK Timeout: This event is generated when the MS does not receive PKMv2 SA-TEK-Response message from the BS within SATEK Timer after transmitting a PKMv2 SA-TEK-Request message. The MS may resend the PKMv2 SA-TEK-Request up to SATEKRequestMaxResends times.

SATEK request max resends elapsed: The Authorization state machine generates this event when the MS has transmitted the PKMv2 SA-TEK-Request message up to SATEKRequestMaxResends times and SATEK Timer expires.

Re-authentication Needed: An internal event to trigger re-authentication. This event can be derived from several sources such as Authorization Grace Timeout or other reason that makes authentication close to expiration.

Start Reentry: An event to inform the Authorization FSM that MS is in reentry phase. The FSM should derive the new AK context for the target BS.

EAPStart Timeout: A timer event that causes the MS to resend a PKMv2 EAP-Start message in order to ask the BS to start EAP-based re-authentication. This event is used in the case Authorization FSM receives neither the EAP Failure event nor the EAP Success event after transmitting the PKMv2 EAP Start message. This timer is active only after Re-authentication Needed event occurred.

Reentry Completed: An event to notify the Authorization FSM that reentry has finished successfully. This event is issued when the MS receives a RNG-RSP message including HO Process Optimization Bit 1 and Bit 2 set to one and zero respectively and SA-TEK-Update TLV during HO or network re-entry from idle mode. This event is also issued when the MS receives a RNG-RSP message including HO Process Optimization Bit 1 and Bit 2 both set to one during HO.

HO Canceled: An event to notify the Authorization FSM that HO was canceled. The cached AK context for the serving BS should be retrieved.

TBS (Target BS) changed: An Event to notify the Authorization FSM that it needs to generate the AK context for the new target BS.

Authentication Expired: This event indicates the AK context became obsolete due to the expiration of AK lifetime.

EAP Failure: This event indicates EAP-based authentication has failed.

External Stop: The event to stop the Authorization FSM and terminate connection with BS.

NOTE—The following events are sent by an Authorization state machine to the TEK state machine:

— *[TEK] Stop*: Sent by the Authorization FSM to an active (non-START state) TEK FSM to terminate the FSM and remove the corresponding SAID's keying material from the SS's key table.
— *[TEK] Authorized*: Sent by the Authorization FSM to a nonactive (START state), but valid TEK FSM.
— *[TEK] Authorization Pending (Auth Pend)*: Sent by the Authorization FSM to a specific TEK FSM to place that TEK FSM in a wait state until the Authorization FSM can complete its reauthorization operation. This event shall be sent to the TEK FSM in the Operational Wait (Op Wait) or Rekey Wait states when Authorization FSM starts re-authentication.
— *[TEK] Authorization Complete (Auth Comp)*: Sent by the Authorization FSM to a TEK FSM in the Operational Reauthorize Wait (Op Reauth Wait) or Rekey Reauthorize Wait (Rekey Reauth Wait) states to clear the wait state begun by a TEK FSM Authorization Pending event. This event shall be sent to the TEK FSM in the Operational Reauthorize Wait or Rekey Reauthorize Wait states when Authorization FSM ends re-authentication.

7.2.2.5.4 Parameters

SATEK Timer: The timer which expires if the MS does not receive a PKMv2 SA-TEK-Response message after sending a PKMv2 SA-TEK-Request message.

EAPStart Timeout: Timeout period between sending PKMv2 EAP Start messages from Authenticated state.

Authorization Grace Time: Amount of time before the AK is scheduled to expire in order that the MS may start re-authentication before the authentication expiry.

7.2.2.5.5 Actions

1-A: Stopped (Start Auth) → Not Authenticated
a) Enable PKMv2 EAP-Transfer messages to be transferred.

1-F: Reentry Authentication Wait (Start Auth) → Not Authenticated
a) Stop TEK FSMs
b) Re-initialize the Authorization FSM
c) Enable PKMv2 EAP-Transfer messages to be transferred.

2-B: Not Authenticated (PKMv2 SA-TEK-Challenge) → SA-TEK-Response Wait
a) Send a PKMv2 SA-TEK-Request message.
b) Start SATEK Timer.

2-C: SA-TEK-Response Wait (PKMv2 SA-TEK-Challenge) → SA-TEK-Response Wait
a) Send a PKMv2 SA-TEK-Request message.
b) Start SATEK Timer.

2-D: Authenticated (PKMv2 SA-TEK-Challenge) → Reauth SA-TEK-Response Wait
a) Send a PKMv2 SA-TEK-Request message.
b) Start SATEK Timer.

2-E: Reauth SA-TEK-Response Wait (PKMv2 SA-TEK-Challenge) → Reauth SA-TEK-Response Wait
a) Send a PKMv2 SA-TEK-Request message.
b) Start SATEK Timer.

3-C: SA-TEK-Response Wait (PKMv2 SA-TEK-Response) → Authenticated
a) Stop SATEK Timer
b) Start TEK FSMs
c) Start Authorization Grace Timer

3-E: Reauth SA-TEK-Response Wait (PKMv2 SA-TEK-Response) → Authenticated
a) Stop SATEK Timer
b) Start Authorization Grace Timer
c) Set the frame number for old AK context to be invalid.

4-B: Not Authenticated (EAP Success) → Not Authenticated
a) Obtain the MSK
b) Derive the keys derived from the PMK

4-D: Authenticated (EAP Success) → Authenticated
a) Obtain the new MSK
b) Derive the keys derived from the PMK

5-C: SA-TEK-Response Wait (SATEK Timeout) → SA-TEK-Response Wait
a) Send a PKMv2 SA-TEK-Request message
b) Start SATEK Timer

5-E: Reauth SA-TEK-Response Wait (SATEK Timeout) → Reauth SA-TEK-Response Wait
a) Send a PKMv2 SA-TEK-Request message
b) Start SATEK Timer

6-C: SA-TEK-Response Wait (SATEK request max resend elapsed) → Stopped
a) Stop the Authorization FSM

6-E: Reauth SA-TEK-Response Wait (SATEK request max resend elapsed) → Stopped
a) Stop TEK FSMs
b) Stop the Authorization FSM

7-D: Authenticated (Re-authentication Needed) → Authenticated
a) Send a PKMv2 EAP-Start message
b) Start EAPStart Timer

8-D: Authenticated (Start Reentry) → Reentry Authentication Wait
a) Generate the AK context for the target BS

8-E: Reauth SA-TEK-Response Wait (Start Reentry) → Reentry Authentication Wait
a) Remove the new AK context for the serving BS generated during performing EAP-based re-authentication procedure
b) Generate the AK contexts for the target BS generated from old PMK context and new PMK context

9-D: Authenticated (EAPStart Timeout) → Authenticated
a) Send a PKMv2 EAP-Start message
b) Start EAPStart Timer

10-F: Reentry Authentication Wait (HO Canceled) → Authenticated
a) Remove the AK context for the target BS
b) Retrieve the cached AK context for the serving BS

11-F: Reentry Authentication Wait (TBS changed) → Reentry Authentication Wait
a) Generate the AK context of new target BS

12-F: Reentry Authentication Wait (Reentry Completed) → Authenticated
a) Update the AK context for the target BS

13-D,E,F: Any state except Stopped, SA-TEK-Response Wait, and Not Authenticated (Authentication Expired) → Stopped
a) Stop TEK FSMs
b) Stop the Authorization FSM

14-B: Not Authenticated (EAP Failure) → Stopped
a) Stop the Authorization FSM

14-D: Authenticated (EAP Failure) → Stopped
a) Stop TEK FSMs
b) Stop the Authorization FSM

15-B,C: Not Authenticated and SA-TEK-Response Wait (External Stop) → Stopped
a) Stop the Authorization FSM

15-D,E,F: Any state except Stopped, Not Authenticated, and SA-TEK-Response Wait (External Stop) → Stopped
a) Stop TEK FSMs
b) Stop Authorization Grace Timer
c) Stop the Authorization FSM

7.2.2.6 TEK state machine

The TEK state machine consists of seven states and eleven events (including receipt of messages) that may trigger state transitions. Like the Authorization state machine, the TEK state machine is presented in both a state flow diagram (Figure 166) and a state transition matrix (Table 209). As was the case for the Authorization state machine, the state transition matrix shall be used as the definitive specification of protocol actions associated with each state transition.

Shaded states in Figure 166 (Operational, Rekey Wait, Rekey Reauthorize Wait, and M&B Rekey Interim Wait) have valid keying material and encrypted traffic may be sent.

The SAID may be replaced by the GSAID for the multicast service or the broadcast service. And, the TEK may be also replaced by the GTEK for the multicast service or the broadcast service.

The Authorization state machine starts an independent TEK state machine for each of its authorized SAIDs. As mentioned in 7.2.2, the BS maintains two active TEKs per SAID.

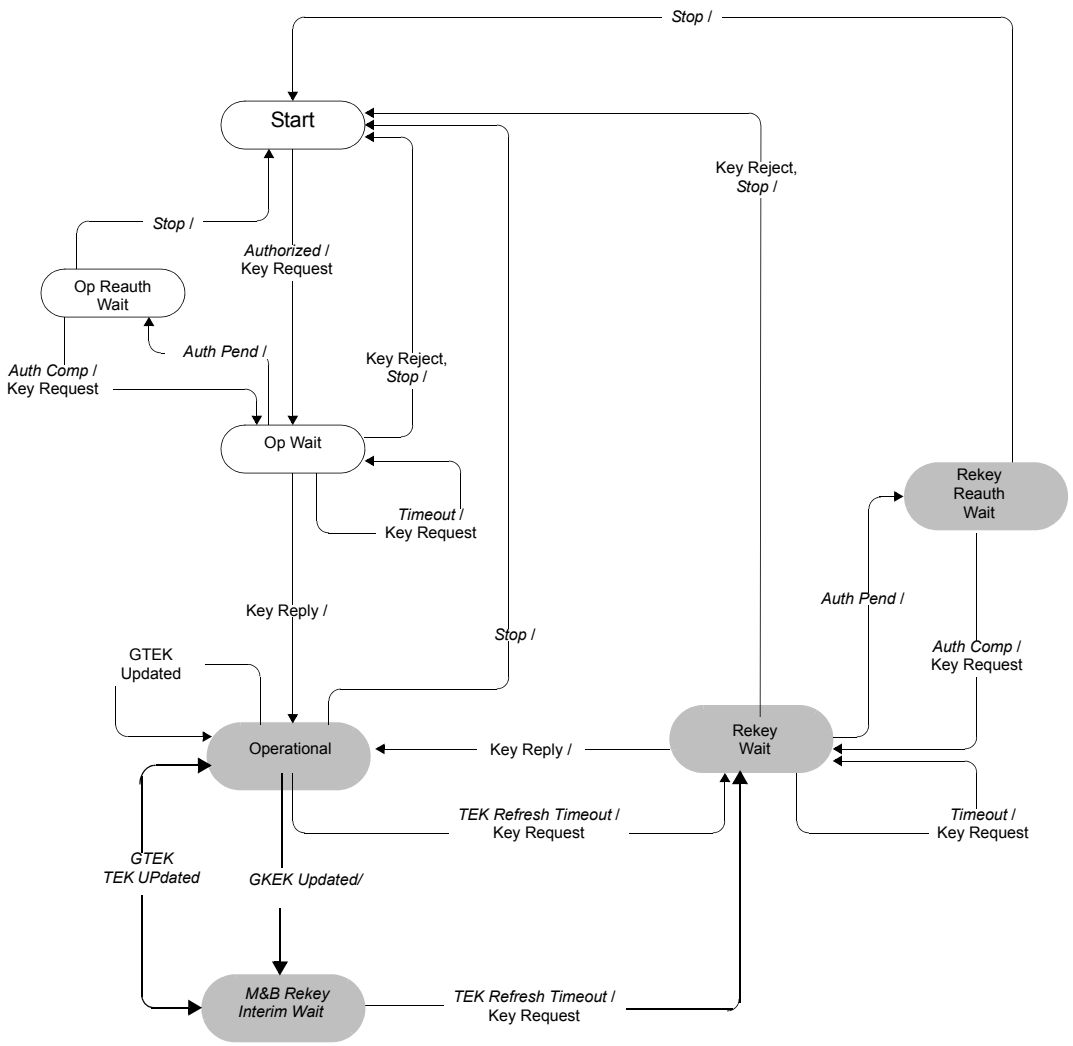

Figure 166—TEK state machine flow diagram

For the unicast service, the BS includes in its Key Replies both of these TEKs, along with their remaining lifetimes. The BS encrypts DL traffic with the older of its two TEKs and decrypts UL traffic with either the older or newer TEK, depending upon which of the two keys the SS was using at the time. The SS encrypts UL traffic with the newer of its two TEKs and decrypts DL traffic with either the older or newer TEK, depending upon which of the two keys the BS was using at the time. See 7.3 for details on SS and BS key usage requirements.

For the multicast service or the broadcast service, the BS may include both of GTEKs in its Key Reply messages when an SS request traffic keying material. Furthermore, the BS may include the newer GTEK in the PKMv2 Group-Key-Update-Command message when the BS transmits the new traffic keying material in key push mode. The BS encrypts DL traffic with current GTEK. The SS decrypts DL traffic with either the older or newer GTEK, depending upon which of the two keys the BS is using at the time. See 7.9 for details on SS and BS key usage requirements.

Through operation of a TEK state machine, the SS attempts to keep its copies of an SAID's TEKs synchronized with those of its BS. A TEK state machine issues Key Requests to refresh copies of its SAID's keying material soon after the scheduled expiration time of the older of its two TEKs and before the expiration of its newer TEK. To accommodate for SS/BS clock skew and other system processing and transmission delays, the SS schedules its Key Requests a configurable number of seconds before the newer TEK's estimated expiration in the BS. With the receipt of the Key Reply, the SS shall always update its records with the TEK parameters from both TEKs contained in the Key Reply message. TEK parameters are contained in the two PKMv2 Group-Key-Update-Command message messages for the multicast service or the broadcast service.

Table 209—TEK FSM state transition matrix for PKMv2

State Event or Rcvd Message	(A) Start	(B) Op Wait	(C) Op Reauth Wait	(D) Op	(E) Rekey Wait	(F) Rekey Reauth Wait	(G) M&B Rekey Interim Wait
(1) *Stop*		Start	Start	Start	Start	Start	
(2) *Authorized*	Op Wait						
(3) *Auth Pend*		Op Reauth Wait			Rekey Reauth Wait		
(4) *Auth Comp*			Op Wait			Rekey Wait	
(5) *TEK Invalid*				Rekey Wait			
(6) *Timeout*		Op Wait			Rekey Wait		
(7) *TEK Refresh Timeout*				Rekey Wait			Rekey Wait
(8) Key Reply		Operational			Operational		
(9) Key Reject		Start			Start		
(10) GKEK Updated				M&B Rekey Interim Wait			
(11) GTEK Updated							Operational

7.2.2.6.1 States

— *Start:* This is the initial state of the FSM. No resources are assigned to or used by the FSM in this state—e.g., all timers are off, and no processing is scheduled.

— *Op (operational) Wait:* The TEK state machine has sent its initial request (Key Request) for its SAID's keying material (TEK and CBC IV), and is waiting for a reply from the BS.
— *Op Reauth (reauthorize) Wait:* The wait state the TEK state machine is placed in if it does not have valid keying material while the Authorization state machine is in the middle of a reauthorization cycle.
— *Operational:* The SS has valid keying material for the associated SAID.
— *Rekey Wait:* The TEK Refresh Timer has expired and the SS has requested a key update for this SAID. Note that the newer of its two TEKs has not expired and may still be used for both encrypting and decrypting data traffic.
— *Rekey Reauth Wait:* The wait state the TEK state machine is placed in if the TEK state machine has valid traffic keying material, has an outstanding request for the latest keying material, and the Authorization state machine initiates a reauthorization cycle.
— *M&B (multicast and broadcast) Rekey Interim Wait:* This state is defined only for the multicast service or the broadcast service. This state is the wait state the TEK state machine is placed in if the TEK state machine has valid traffic keying material and receives the new GKEK from the BS.

7.2.2.6.2 Messages

Note that the message formats are defined in detail in 6.3.2.3.9.

— *Key Request:* Request a TEK for this SAID. Sent by the SS to the BS and authenticated with keyed message digest. The message authentication key is derived from the AK.
— *Key Reply:* Response from the BS carrying the two diversity sets of traffic keying material for this SAID. Sent by the BS to the SS, it includes the SAID's TEKs, encrypted with a KEK derived from the AK or the GSAID's GTEK, encrypted with a GKEK randomly generated from the BS or the ASA server. The Key Reply message is authenticated with a keyed message digest; the authentication key is derived from the AK.
— *Key Reject:* Response from the BS to the SS to indicate this SAID is no longer valid and no key will be sent. The Key Reject message is authenticated with a keyed message digest; the authentication key is derived from the AK.
— *TEK Invalid:* The BS sends an SS this message if it determines that the SS encrypted an UL PDU with an invalid TEK, i.e., an SAID's TEK key sequence number, contained within the received PDU's MAC header, is out of the BS's range of known, valid sequence numbers for that SAID.
— *Key Update Command:* Push a GTEK for this GSAID for the multicast service or the broadcast service. Sent by the BS to the SS and authenticate with keyed message digest. The message authentication key is derived from the AK in the PKMv2 Group-Key-Update-Command message for the GKEK update mode. The message authentication key is derived from the GKEK in the Key Update Command message for the GTEK update mode.

7.2.2.6.3 Events

— *Stop:* Sent by the Authorization FSM to an active (non-START state) TEK FSM to terminate TEK FSM and remove the corresponding SAID's keying material from the SS's key table. See Figure 159.
— *Authorized:* Sent by the Authorization FSM to a non-active (START state) TEK FSM to notify TEK FSM of successful authorization. See Figure 159.
— *Authorization Pending (Auth Pend):* Sent by the Authorization FSM to TEK FSM to place TEK FSM in a wait state while Authorization FSM completes reauthorization. See Figure 159.
— *Authorization Complete (Auth Comp):* Sent by the Authorization FSM to a TEK FSM in the Operational Reauthorize Wait or Rekey Reauthorize Wait states to clear the wait state begun by the prior Authorization Pending event. See Figure 159.
— *TEK Invalid:* This event is triggered by either an SS's data packet decryption logic or by the receipt of a TEK Invalid message from the BS.

An SS's data packet decryption logic triggers a TEK Invalid event if it recognizes a loss of TEK key synchronization between itself and the encrypting BS. For example, an SAID's TEK key sequence number, contained within the received DL MAC PDU header, is out of the SS's range of known sequence numbers for that SAID.

A BS sends an SS a TEK Invalid message, triggering a TEK Invalid event within the SS, if the BS's decryption logic recognizes a loss of TEK key synchronization between itself and the SS.

— *Timeout:* A retry timer timeout. Generally, the particular request is retransmitted.
— *TEK Refresh Timeout:* The TEK refresh timer timed out. This timer event signals the TEK state machine to issue a new Key Request in order to refresh its keying material. The refresh timer is set to fire a configurable duration of time (*TEK Grace Time*) before the expiration of the newer TEK the SS currently holds. This is configured via the BS to occur after the scheduled expiration of the older of the two TEKs.
— *GKEK Updated:* This event is triggered when the SS receives the new GKEK through the PKMv2 Group-Key-Update-Command message for the GKEK update mode.
— *GTEK Updated:* This event is triggered when the SS receives the new GTEK and traffic keying material through the PKMv2 Group-Key-Update-Command message for the GTEK update mode.

7.2.2.6.4 Parameters

All configuration parameter values take the default values from Table 555 or may be specified in Auth Reply message.

— *Operational Wait Timeout:* Timeout period between sending of Key Request messages from the Op Wait state (see 11.9.18.4).
— *Rekey Wait Timeout:* Timeout period between sending of Key Request messages from the Rekey Wait state (see 11.9.18.5).
— *TEK Grace Time:* Time interval, in seconds, before the estimated expiration of a TEK that the SS starts rekeying for a new TEK. TEK Grace Time takes the default value from Table 555 or may be specified in a configuration setting within the Auth Reply message and is the same across all SAIDs (see 11.9.18.6).
— *M&B TEK Grace Time:* Time interval, in seconds, before the estimated expiration of an old distributed GTEK.

7.2.2.6.5 Actions

Actions taken in association with state transitions are listed by <event> (<rcvd message>) --> <state>:

1-B Op Wait (*Stop*) → Start

a) Clear Key Request retry timer
b) Terminate TEK FSM

1-C Op Reauth Wait (*Stop*) → Start

a) Terminate TEK FSM

1-D Operational (*Stop*) → Start

a) Clear TEK refresh timer, which is timer set to go off *"TEK Grace Time"* seconds prior to the TEK's scheduled expiration time
b) Terminate TEK FSM
c) Remove SAID keying material from key table

1-E Rekey Wait (*Stop*) → Start

a) Clear Key Request retry timer
b) Terminate TEK FSM
c) Remove SAID keying material from key table

1-F Rekey Reauth Wait (*Stop*) → Start

a) Terminate TEK FSM
b) Remove SAID keying material from key table

2-A Start (*Authorized*) → Op Wait

a) Send Key Request message to BS
b) Set Key Request retry timer to Operational Wait Timeout

3-B Op Wait (*Auth Pend*) → Op Reauth Wait

a) Clear Key Request retry timer

3-E Rekey Wait (*Auth Pend*) → Rekey Reauth Wait

a) Clear Key Request retry timer

4-C Op Reauth Wait (*Auth Comp*) → Op Wait

a) Send Key Request message to BS
b) Set Key Request retry timer to Operational Wait Timeout

4-F Rekey Reauth Wait (*Auth Comp*) → Rekey Wait

a) Send Key Request message to BS
b) Set Key Request retry timer to Rekey Wait Timeout

5-D Operational (*TEK Invalid*) → Rekey_Wait

a) Send a Key Request message to BS
b) Set Key Request retry timer to Rekey Wait Timeout

6-B Op Wait (*Timeout*) → Op Wait

a) Send Key Request message to BS
b) Set Key Request retry timer to Operational Wait Timeout

6-E Rekey Wait (*Timeout*) → Rekey Wait

a) Send Key Request message to BS
b) Set Key Request retry timer to Rekey Wait Timeout

7-D Operational (*TEK Refresh Timeout*) → Rekey Wait

a) Send Key Request message to BS
b) Set Key Request retry timer to Rekey Wait Timeout

7-G M&B Rekey Interim Wait (*TEK Refresh Timeout*) → Rekey Wait

a) Send Key Request message to BS
b) Set Key Request retry timer to Rekey Wait Timeout

8-B Op Wait (Key Reply) → Operational

a) Clear Key Request retry timer
b) Process contents of Key Reply message and incorporate new keying material into key database
c) Set the TEK refresh timer to go off "TEK Grace Time" seconds prior to the newer key's scheduled expiration

8-E Rekey Wait (Key Reply) → Operational

a) Clear Key Request retry timer
b) Process contents of Key Reply message and incorporate new keying material into key database
c) Set the TEK refresh timer to go off "TEK Grace Time" seconds prior to the newer key's scheduled expiration

9-B Op Wait (Key Reject) → Start

a) Clear Key Request retry timer
b) Terminate TEK FSM

9-E Rekey Wait (Key Reject) → Start

a) Clear Key Request retry timer
b) Terminate TEK FSM
c) Remove SAID keying material from key table

10-D Operational (*GKEK Updated*) → M&B Rekey Interim Wait

a) Process contents of PKMv2 Group-Key-Update-Command message for the GKEK update mode and incorporate new GKEK into key database

11-G M&B Rekey Interim Wait (*GTEK Updated*) → Operational

a) Clear Key Request retry timer
b) Process contents of PKMv2 Group-Key-Update-Command message for the GTEK update mode and incorporate new traffic keying material into key database
c) Set the TEK refresh timer to go off "TEK Grace Time" seconds prior to the key's scheduled expiration

7.3 Dynamic SA creation and mapping

Dynamic Security Associations are SAs that a BS establishes and eliminates dynamically. SSs learn the mapping of a particular privacy-enabled service flow to specific SA through the exchange of DSx-REQ/RSP messages.

7.3.1 Dynamic SA creation

The BS may dynamically establish SAs by issuing an SA Add message. Upon receiving an SA Add message, the SS shall start a TEK state machine for each SA listed in the message.

7.3.2 Dynamic mapping of SA

When creating a new service flow, an SS may request an existing SA be used by passing the SAID of the SA in a DSA-REQ or DSC-REQ message. The BS checks the SS's authorization for the requested SA and generates appropriate response using a DSA-RSP or DSC-RSP message correspondingly.

With BS-initiated dynamic service creations, a BS may also map a new service flow to an existing SA that is supported by a specific SS. The SAID of the SA shall be communicated to the SS in a DSA-REQ or DSC-REQ message.

7.4 Key usage

7.4.1 BS key usage

The BS is responsible for maintaining keying information for all SAs. The PKM protocol defined in this specification describes a mechanism for synchronizing this keying information between a BS and its client SS.

7.4.1.1 AK key lifetime

At initial network entry, if the security is enabled during the basic capabilities negotiation, the authorization procedure shall be initiated. The authorization procedure activates a new AK. This AK shall remain active until it expires according to its predefined *AK Lifetime*, a BS system configuration parameter.

In PKMv1, the AK's active lifetime a BS reports in an Authorization Reply message shall reflect, as accurately as an implementation permits, the remaining lifetimes of AK at the time the Authorization Reply message is sent. In PKMv2, AK lifetime is determined by either PMK lifetime or PAK lifetime, or both of them. The old AK may be used until the frame number specified in PKMv2 SA-TEK-Response message.

If an SS fails to reauthorize before the expiration of its current AK, the BS shall hold no active AKs for the SS and shall consider the SS *unauthorized*. A BS shall remove from its keying tables all TEKs associated with an unauthorized SS's SA.

7.4.1.2 AK transition period on BS side

The BS shall always be prepared to start re-authentication upon request. The BS shall be able to support two simultaneously active AKs for each client SS. The BS has two active AKs during an AK transition period; the two active keys have overlapping lifetimes.

In PKMv1, an AK transition period begins when the BS receives an Auth Request message from an SS and the BS has a single active AK for that SS. In response to this Auth Request, the BS activates a second AK [see point (a) and (d) in Figure 167], which shall have a key sequence number one greater (modulo 16) than

that of the existing AK and shall be sent back to the requesting SS in an Auth Reply message. The BS shall set the active lifetime of this second AK to be the remaining lifetime of the first AK [between points (a) and (c) in Figure 167], plus the predefined *AK Lifetime*; thus, the second, "newer" key shall remain active for one *AK Lifetime* beyond the expiration of the first, "older" key. The key transition period shall end with the expiration of the older key. This is depicted on the right-hand side of Figure 167.

As long as the BS is in the midst of an SS's AK transition period, and thus is holding two active AKs for that SS, it shall respond to Auth Request messages with the newer of the two active keys. Once the older key expires, an Auth Request shall trigger the activation of a new AK, and the start of a new key transition period.

In PKMv2, the new AK is activated by PKMv2 SA-TEK 3-way handshake as follows.

Once the PKMv2 SA-TEK 3-way handshake begins, the BS and the SS shall use the new AK for the 3-way handshake messages. The other messages shall continue to use the old AK until SA-TEK 3-way handshake is completed successfully. The old AK shall be maintained until the frame number specified in PKMv2 SA-TEK-Response message. The key sequence number of the new AK is incremented (modulo 16) by the rule shown in Table 203. The rule to decide the AK lifetime is also shown in Table 203.

7.4.1.3 BS usage of AK

The BS shall use keying material derived from the SS's AK for the following:

a) Verifying the C/HMAC-Digests in Key Request or PKMv2-Key-Request messages received from that SS,
b) Calculating the C/HMAC-Digests it writes into Key Reply/PKMv2-Key-Reply, Key Reject/ PKMv2-Key-Reject, and TEK Invalid/PKMv2-TEK-Invalid messages sent to that SS, and
c) Encrypting the TEK in the Key Reply/PKMv2-Key-Reply messages it sends to that SS.

A BS shall use a C/HMAC_KEY_U (see 7.5.4.3 and Figure 7.5.4.4) derived from one of the SS's active AKs to verify the C/HMAC-Digest in Key Request/PKMv2-Key-Request messages received from the SS. The AK Key Sequence Number accompanying each Key Request/PKMv2-Key-Request message allows the BS to determine which C/HMAC_KEY_U was used to authenticate the message. In PKMv1, if the AK Key Sequence Number indicates the newer of the two AKs, the BS shall identify this as an *implicit acknowledgment* that the SS has obtained the newer of the SS's two active AKs [see points (b) in Figure 167].

A BS shall use a C/HMAC_KEY_D derived from the active AK selected above (see also 7.5.4.3 and Figure 7.5.4.4) when calculating C/HMAC-Digests in Key Reply/PKMv2-Key-Reply, Key Reject/PKMv2-Key-Reject, and TEK Invalid/PKMv2-TEK-Invalid messages. When sending Key Reply/PKMv2-Key-Reply, Key Reject/PKMv2-Key-Reject, or TEK Invalid/PKMv2-TEK-Invalid messages within a key transition period (i.e., when two active AKs are available), if the newer key has been implicitly acknowledged, the BS shall use the newer of the two active AKs. If the newer key has not been implicitly acknowledged, the BS shall use the older of the two active AKs to derive the KEK and the C/HMAC_KEY_D.

The BS shall use a KEK derived from an active AK when encrypting the TEKs in the Key Reply/PKMv2-Key-Reply messages. The right-hand side of Figure 167 illustrates the BS's policy regarding its use of AKs in PKMv1, where the shaded portion of an AK's lifetime indicates the time period during which that AK shall be used to derive the C/HMAC_KEY_U, C/HMAC_KEY_D, and KEK.

For calculating the C/HMAC-Digest in the C/HMAC Tuple attribute, the BS shall use the C/ HMAC_KEY_U and C/HMAC_KEY_D derived from one of the active AKs. For signing messages, if the newer AK has been implicitly acknowledged, the BS shall use the newer of the two active AKs to derive the

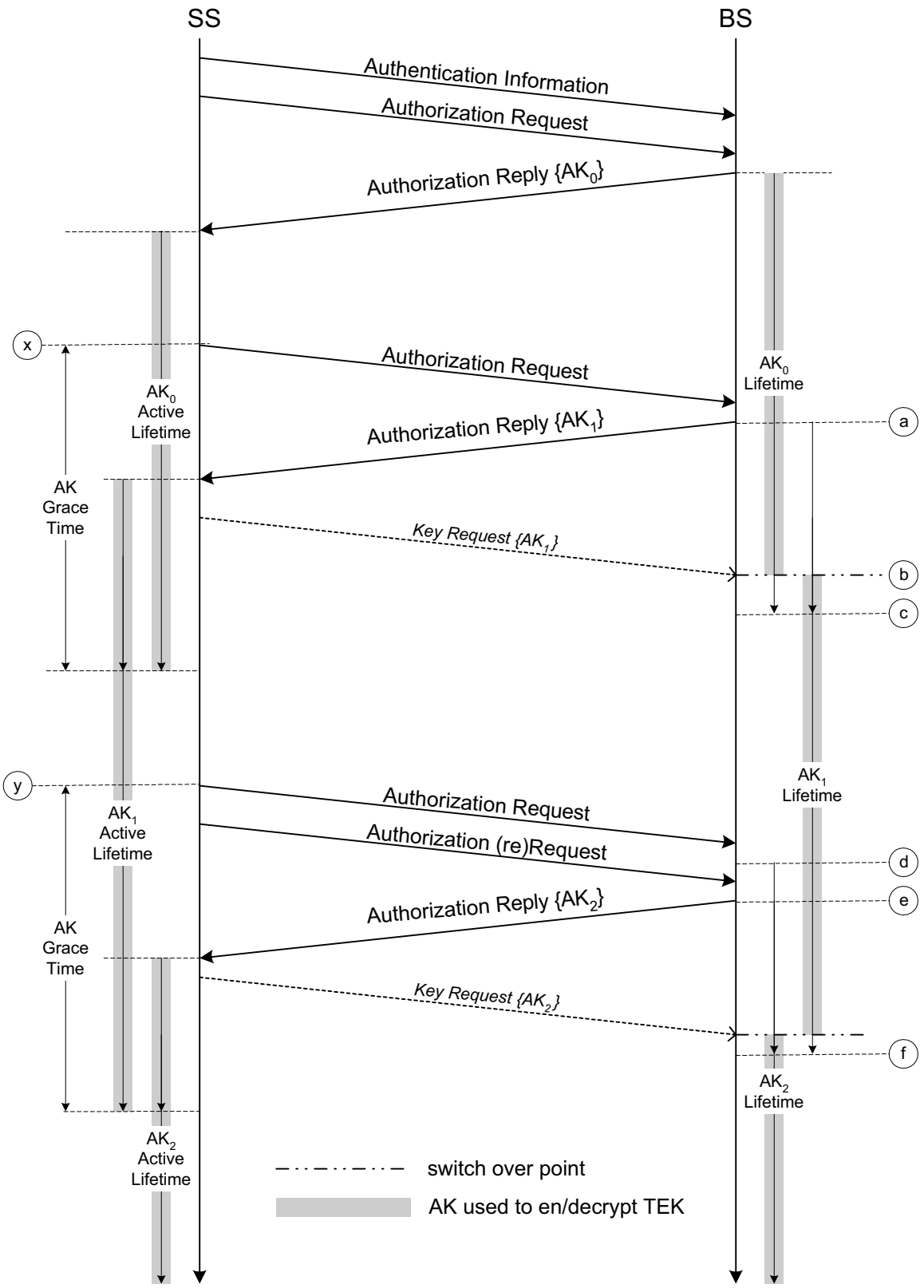

Figure 167—AK management in BS and SS

C/HMAC_KEY_D. If the newer key has not been implicitly acknowledged, the BS shall use the older of the two active AKs to derive the C/HMAC_KEY_D. The C/HMAC Key Sequence Number in the C/HMAC Tuple, equal to the AK's sequence number from which the C/HMAC_KEY_D was derived, enables the SS to correctly determine which C/HMAC_KEY_D was used for message authentication.

When receiving messages containing the C/HMAC Tuple attribute, the BS shall use the C/HMAC_KEY_U indicated by the C/HMAC Key Sequence Number to authenticate the messages.

7.4.1.4 TEK lifetime

The BS shall maintain two sets of active TEKs (and their associated Initialization Vectors, or IVs) per SAID, corresponding to two successive generations of keying material. The two generations of TEKs shall have overlapping lifetimes determined by *TEK Lifetime*, a predefined BS system configuration parameter. The newer TEK shall have a key sequence number one greater (modulo 4) than that of the older TEK. Each TEK becomes active halfway through the lifetime of its predecessor and expires halfway through the lifetime of its successor. Once a TEK's lifetime expires, the TEK becomes inactive and shall no longer be used.

The Key Reply or PKMv2-Key-Reply messages sent by a BS contain TEK parameters for the two active TEKs. The TEKs' active lifetimes a BS reports in a Key Reply or PKMv2-Key-Reply message shall reflect, as accurately as an implementation permits, the remaining lifetimes of these TEKs at the time the Key Reply or PKMv2-Key-Reply message is sent.

7.4.1.5 BS usage of TEK

The BS transitions between the two active TEKs differently, depending on whether the TEK is used for DL or UL traffic. For each of its SAIDs, the BS shall transition between active TEKs according to the following rules:

a) At expiration of the older TEK, the BS shall immediately transition to using the newer TEK for encryption.
b) The UL transition period begins from the time the BS sends the newer TEK in a Key Reply or PKMv2-Key-Reply message and concludes once the older TEK expires.

It is the responsibility of the SS to update its keys in a timely fashion; the BS shall transition to a new DL encryption key regardless of whether a client SS has retrieved a copy of that TEK.

The BS uses the two active TEKs differently, depending on whether the TEK is used for DL or UL traffic. For each of its SAIDs, the BS shall use the two active TEKs according to the following rules:

— The BS shall use the older of the two active TEKs for encrypting DL traffic.
— The BS shall be able to decrypt UL traffic using either the older or newer TEK.

Note that the BS encrypts with a given TEK for only the second half of that TEK's total lifetime. The BS is able, however, to decrypt with a TEK for the TEK's entire lifetime.

Figure 168 illustrates the management of an SA's TEKs, where the shaded portion of a TEK's lifetime indicates the time period during which that TEK shall be used to encrypt MAC PDU payloads.

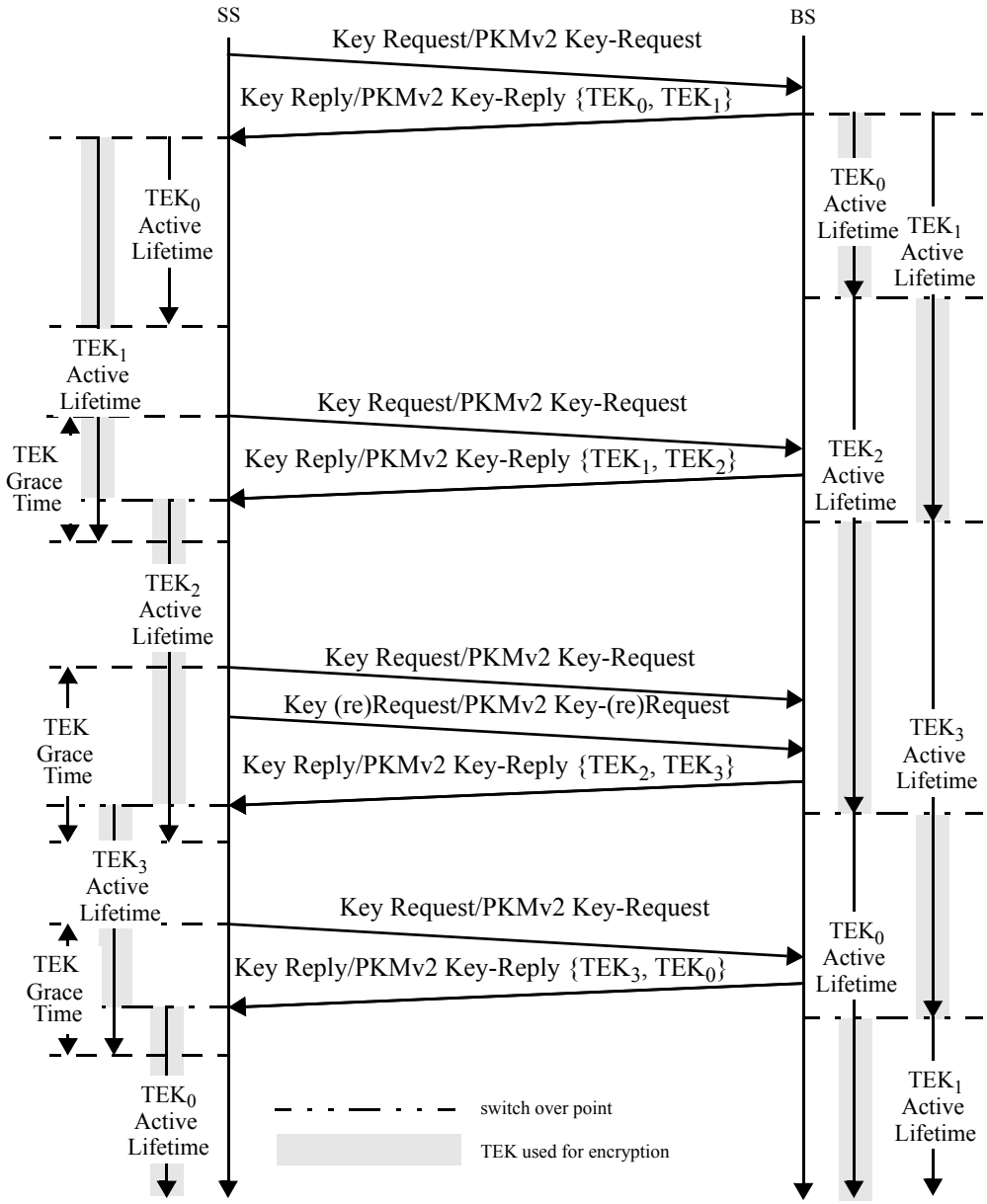

Figure 168—TEK management in BS and SS

7.4.2 SS key usage

In PKMv1 or PKMv2 RSA-based authentication, the SS is responsible for sustaining authorization with its BS and maintaining an active AK. In PKMv2 EAP-based authentication, reauthorization can be initiated by either BS or SS to refresh the AK. An SS shall be prepared to use its two most recently obtained AKs according to the manner described in 7.4.2.1 through 7.4.2.3.

7.4.2.1 SS reauthorization

AKs have a limited lifetime and shall be periodically refreshed. In PKMv1, an SS refreshes its AK by reissuing an Auth Request to the BS. The Authorization State Machine (7.2.1.5) manages the scheduling of Auth Requests for refreshing AKs. In PKMv2 RSA-based authentication, the SS refreshes its AK by issuing a PKMv2 RSA-Request message. In PKMv2 EAP-based authentication, reauthorization can be initiated by either BS or SS to refresh the AK. The SS initiates reauthorization by issuing PKMv2 EAP-Start message to the BS. The BS initiates reauthorization by issuing PKMv2 EAP-Transfer message encapsulating EAP request/identity to the SS. The authorization state machine for PKMv2 EAP-based authentication is described in Figure 7.2.2.5

In PKMv1, an SS's Authorization state machine schedules the beginning of reauthorization a configurable duration of time, the *Authorization Grace Time*, [see points (x) and (y) in Figure 167], before the SS's latest AK is scheduled to expire. The Authorization Grace Time is configured to provide an SS with an authorization retry period that is sufficiently long to allow for system delays and provide adequate time for the SS to successfully complete an Authorization exchange before the expiration of its most current AK.

In PKMv2 EAP-based authentication, reauthorization is triggered when any of the following conditions are met: 1) Authorization Grace Timer expires, 2) CMAC_KEY_COUNT or CMAC_PN_* approaches the maximum number, 3) PKMv2 EAP-Start message is sent by the SS, 4) PKMv2 EAP-Transfer message encapsulating EAP request/identity is sent by the BS.

Note that the BS does not require knowledge of the Authorization Grace Time. The BS, however, shall track the lifetimes of its AKs and shall deactivate a key once it has expired.

7.4.2.2 SS usage of AK

An SS shall use the C/HMAC_KEY_U derived from the newer of its two most recent AKs when calculating the C/HMAC-Digests it attaches to Key Request or PKMv2-Key-Request messages.

The SS shall be able to use the C/HMAC_KEY_D derived from either of its two most recent AKs to authenticate Key Reply, Key Reject, and TEK Invalid messages for PKMv1, or PKMv2-Key-Reply, PKMv2-Key-Reject, and PKMv2-TEK-Invalid messages for PKMv2. The SS shall be able to decrypt an encrypted TEK in a Key Reply or PKMv2-Key-Reply message with the KEK derived from either of its two most recent AKs. The SS shall use the accompanying AK Key Sequence Number to determine which set of keying material to use.

The left-hand side of Figure 167 illustrates an SS's maintenance and usage of its AKs in PKMv1, where the shaded portion of an AK's lifetime indicates the time period during which that AK shall be used to decrypt TEKs. Even though it is not part of the message exchange, Figure 167 also shows the implicit acknowledgment of the reception of a new AK via the transmission of a Key Request message using the key sequence of the new AK.

An SS shall use the C/HMAC_KEY_U derived from the newer of its two most recent AKs when calculating the C/HMAC-Digests of the C/HMAC Tuple attribute.

7.4.2.3 SS usage of TEK

An SS shall be capable of maintaining two successive sets of traffic keying material per authorized SAID. Through operation of its TEK state machines, an SS shall request a new set of traffic keying material a configurable amount of time, the *TEK Grace Time* [see points (x) and (y) in Figure 168], before the SS's latest TEK is scheduled to expire.

For each of its authorized SAIDs, the SS

— Shall use the newer of its two TEKs to encrypt UL traffic, and
— Shall be able to decrypt DL traffic encrypted with either of the TEKs.

The left-hand side of Figure 168 illustrates the SS's maintenance and usage of an SA's TEKs, where the shaded portion of a TEK's lifetime indicates the time period during which that TEK shall be used to encrypt MAC PDU payloads.

7.5 Cryptographic methods

This subclause specifies the cryptographic algorithms and key sizes used by the PKM protocol. All SS and BS implementations shall support the method of packet data encryption defined in 7.5.1.1, encryption of the TEK as specified in 7.5.2, and message digest calculation as specified in 7.5.3.

All inputs to key derivation and other supporting functions shall be byte aligned. Furthermore, each byte shall be in canonical form as defined in IEEE Std 802 where the leftmost bit in each byte is the most significant bit and the rightmost bit is the least significant bit.

7.5.1 Data Encryption methods

7.5.1.1 Data encryption with DES in CBC mode

If the data encryption algorithm identifier in the cryptographic suite of an SA equals 0x01, data on connections associated with that SA shall use the CBC mode of the DES algorithm (FIPS 46-3, FIPS 74, and FIPS 81) to encrypt the MAC PDU payloads.

The CBC IV shall be calculated as follows:

— In the DL, the CBC shall be initialized with the exclusive-or (XOR) of
  — The IV parameter included in the TEK keying information and
  — The current frame number (right justified).
— In the UL, the CBC shall be initialized with the XOR of
  — The IV parameter included in the TEK keying information and
  — The frame number of the frame where the relevant UL-MAP was transmitted.

Residual termination block processing shall be used to encrypt the final block of plaintext when the final block is less than 64 bits. Given a final block having *n* bits, where *n* is less than 64, the next-to-last ciphertext block shall be DES encrypted a second time, using the electronic code book (ECB) mode, and the *n* MSBs of the result are XORed with the final *n* bits of the payload to generate the short final cipher block. In order for the receiver to decrypt the short final cipher block, the receiver DES encrypts the next-to-last ciphertext block, using the ECB mode, and XORs the *n* MSBs with the short final cipher block in order to recover the short final cleartext block. This encryption procedure is depicted in Figure 9.4 of Schneier [B43].

In the special case when the payload portion of the MAC PDU is less than 64 bits, the IV shall be DES encrypted and the *n* MSBs of the resulting ciphertext, corresponding to the number of bits of the payload, shall be XORed with the *n* bits of the payload to generate the short cipher block.[20]

[20]If two or more PDUs with less than 8 byte payloads are transmitted in the same frame using the same SA, the XOR of the payload plaintexts can be found easily. In practice, this situation is very unlikely to occur, as payloads are typically larger than 8 bytes. In the case that multiple payloads of less than 8 bytes are to be transmitted in the same frame on the same SA and service, packing of the short SDUs into a single PDU will eliminate this weakness. If the SDUs are for different services, packing the SDUs with zero-length fictitious SDUs allows the use of the PSH to extend the size of the PDU to at least 8 bytes.

7.5.1.2 Data encryption with AES in CCM mode

If the data encryption algorithm identifier in the cryptographic suite of an SA equals 0x02, data on connections associated with that SA shall use the CCM mode of the AES algorithm (NIST Special Publication 800-38C and FIPS 197) to encrypt the MAC PDU payloads.

7.5.1.2.1 PDU payload format

The MAC PDU payload shall be prepended with a 4-byte PN (Packet Number). The PN shall be encoded in the MAC PDU least significant byte first. The PN shall not be encrypted.

The plaintext PDU shall be encrypted and authenticated using the active TEK, according to the CCM specification. This includes appending an 8-byte integrity check value (ICV) to the end of the payload and encrypting both the plaintext payload and the appended ICV.

The ciphertext message authentication code is transmitted so that byte index 0 (as enumerated in NIST Special Publication 800-38) is transmitted first and byte index 7 is transmitted last (i.e., LSB first).

The processing yields a payload that is 12 bytes longer than the plaintext payload. See Figure 169.

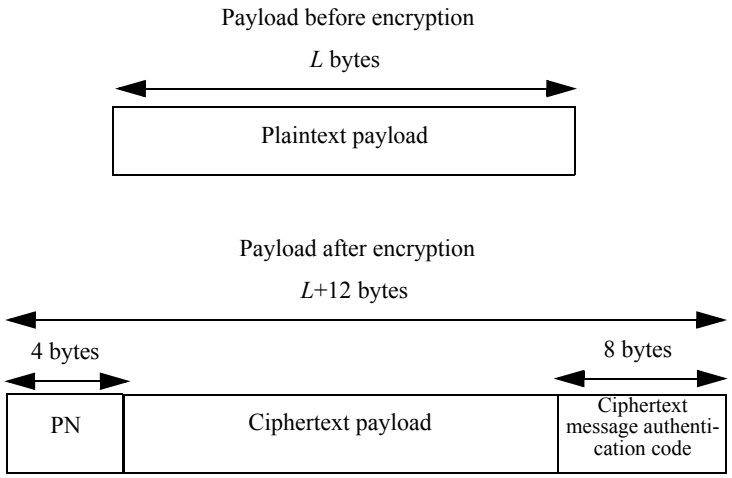

Figure 169—Encrypted payload format in AES-CCM mode

7.5.1.2.2 Packet number (PN)

The PN associated with an SA shall be set to 1 when the SA is established and when a new TEK is installed. After each PDU transmission, the PN shall be incremented by 1. On UL connections, the PN shall be XORed with 0x80000000 prior to encryption and transmission. On DL connections, the PN shall be used without such modification.[21]

Any tuple value of {PN, KEY} shall not be used more than once for the purposes of transmitting data.[22] The SS shall ensure that a new TEK is requested and transferred before the PN on either the SS or BS reaches 0x7FFFFFFF. If the PN in either the SS or BS reaches 0x7FFFFFFF without new keys being installed, transport communications on that SA shall be halted until new TEKs are installed.

[21]This achieves the splitting of the PN space. 0x00000001 – 0x7FFFFFFF for the DL and 0x80000001 – 0xFFFFFFFF on the UL, preventing a PN collision between the UL and DL.

[22]Sending two packets encoded with the same key and PN will eliminate all security guarantees of CCM mode.

7.5.1.2.3 CCM algorithm

The NIST CCM specification defines a number of algorithm parameters. These parameters shall be fixed to specific values when used in SAs with a data encryption algorithm identifier of 0x02.

'Tlen' shall equal 64 and *t* shall equal 8, meaning, the number of bytes in the Message Authentication field shall be set to 8. Consistent with the CCM specification, the 3-bit binary encoding $[(t–2)/2)]_3$ of bits 5, 4, and 3 of the Flags byte in B_0 shall be 011.

The size *q* of the Length field Q shall be set to 2. Consistent with the CCM specification, the 3-bit binary encoding $[q-1]_3$ of the q field in bits 2, 1, and 0 of the Flags byte in B_0 shall be 001.

The length *a* of the associated data string *A* shall be set to 0.

The nonce shall be 13 bytes long as shown in Figure 170. Bytes 0 through 4 shall be set to the first 5 bytes of the generic MAC header (thus excluding the HCS). The HCS of the generic MAC header is not included in the nonce since it is redundant. Bytes 5 through 8 are reserved and shall be set to 0x00000000. Bytes 9 through 12 shall be set to the value of the PN. The PN bytes shall be ordered so that byte 9 shall take the least significant byte and byte 12 shall take the most significant byte.

Byte number	0 4	5 8	9 12
Field	Generic MAC header	*Reserved*	PN
Contents	Generic MAC header omitting HCS	0x00000000	PN field from payload

Figure 170—Nonce N construction

Consistent with the CCM specification, the initial block B_0 is formatted as shown in Figure 171.

Byte number	0	1 13	14 15
Byte significance:			MSB LSB
Number of bytes	1	13	2
Field	Flag	Nonce	L
Contents	0x19	As specified in Figure 170	Length of plain text payload

Figure 171—Initial CCM Block B_0

Note the ordering of the DLEN value is MSB first, consistent with the NIST CCM specification.

Consistent with the NIST CCM specification, the counter blocks Ctr_j are formatted as shown in Figure 172.

Byte number	0	1 13	14 15
Byte significance:			MSB LSB
Number of bytes	1	13	2
Field	Flag	Nonce	Counter
Contents	0x1	As specified in Figure 170	i

Figure 172—Construction of counter blocks Ctr_j

7.5.1.2.4 Receive processing rules

On receipt of a PDU the receiving SS or BS shall decrypt and authenticate the PDU consistent with the NIST CCM specification configured as specified in 7.5.1.2.3.

Packets that are found to be not authentic shall be discarded.

Receiving BS or SSs shall maintain a record of the highest value PN receive for each SA.

The receiver shall maintain a PN window whose size is specified by the PN_WINDOW_SIZE parameter for SAs and management connections as defined in 11.8.4.4. Any received PDU with a PN lower than the beginning of the PN window shall be discarded as a replay attempt. The receiver shall track PNs within the PN window. Any PN that is received more than once shall be discarded as a replay attempt. Upon reception of a PN, which is greater than the end of the PN window, the PN window shall be advanced to cover this PN.

7.5.1.2.5 AES-CCM mode example encrypted MAC PDUs

The following two examples show MAC PDUs in both plaintext and enciphered form in transmission order. In addition, the post-decryption plaintext of the message authentication code is shown.

Example AES-CCM PDU #1 (Hex)

Plaintext PDU
Generic MAC header = 00 40 0A 06 C4 30
Payload = 00 01 02 03
Ciphertext PDU where TEK = 0xD50E18A844AC5BF38E4CD72D9B0942E5 and PN=0x2157F6BC
Generic MAC header = 40 40 1A 06 C4 5A
PN field = BC F6 57 21
Encrypted payload = E7 55 36 C8
Encrypted message authentication code = 27 A8 D7 1B 43 2C A5 48
CRC32 for SC and OFDM mode = CB B6 5F 48
CRC32 for OFDMA mode = 1B D1 BA 21
After decryption
Plaintext message authentication code = 01 59 09 A0 ED CC 21 D3

Example AES-CCM PDU #2 (Hex)

Plaintext PDU	
Generic MAC header =	00 40 27 7E B2 AD
Payload =	00 01 02 03 04 05 06 07 08 09 0A 0B 0C 0D 0E 0F 10 11 12 13 14 15 16 17 18 19 1A 1B 1C 1D 1E 1F 20
Ciphertext PDU where TEK = 0xB74EB0E4F81AD63D121B7E9AECCD268F and PN=0x78D07D08	
Generic MAC header =	40 40 37 7E B2 C7
PN field =	08 7D D0 78
Encrypted payload =	71 3F B1 22 B9 73 4F DB FD 68 2E AD 9D CA 9F 44 1F 62 FE 0F 4A 2C 45 B5 53 17 3D 66 5B 2D 53 C1 B3
Encrypted message authentication code =	E7 E4 8D 2D B7 61 CF 94
CRC32 for SC and OFDM mode =	92 1B 32 41
CRC32 for OFDMA mode =	FD 03 7B 1D
After decryption	
Plaintext message authentication code =	0B DB 85 3C 0A CA E6 5F

7.5.1.3 Data encryption with AES in CTR mode

If the data encryption algorithm identifier in the cryptographic suite of an MBS GSA equals 0x80, data on connections associated with that SA shall use the CTR mode of the AES algorithm (NIST Special Publication 800-38A, FIPS 197, IETF RFC 3686) to encrypt the MAC PDU payloads. In MBS, the AES block size and cipher counter block are 128 bits.

7.5.1.3.1 Encrypted MBS PDU payload format

CTR mode requires unique initial counter and key pair across all messages. This subclause describes the initialization of the 128-bit initial counter, constructed from the 24-bit PHY synchronization field or frame number and a new 8-bit Rollover counter (ROC).

ROC shall be reset to zero upon obtaining a new key. The first 3 most significant bits of the ROC is the rollover counter for the frame number, i.e., when the frame number reaches 0x000000 (from 0xFFFFFF) it is incremented by 1 mod 8. The 5 least significant bits of ROC shall be allocated to MBS MAC PDUs in such manner that no two MBS MAC PDUs in the same frame using the same MTK have the same ROC value.

Using this method, up to 32 PDUs per frame using the same MTK can be supported. A new encryption key (MTK) is required every $2^3 \times 2^{24} = 2^{27}$ frames.

The PDU payload for AES-CTR encryption shall be prepended with the 8-bit ROC, i.e., the ROC is the 8 MSBs of the 32-bit nonce. The ROC shall not be encrypted.

Any tuple value of {AES Counter, KEY} shall not be used more than once for the purposes of encrypting a block. The SS and BS shall ensure that a new MGTEK is requested and transferred, and a new MTK is derived and ready for use before the 3 MSB of ROC concatenated with the frame number reaches 0x7FF.

A 32-bit nonce NONCE = n0 | n1 | n2 | n3 (n0 being the most significant byte and n3 the least significant byte) is made of ROC and 24 bits frame number in the following way: n0 = ROC and n1, n2, n3 are the byte representation of frame-number in MSB first order. NONCE shall be repeated four times to construct the 128-bit counter block required by the AES-128 cipher. (initial counter = NONCE|NONCE|NONCE|NONCE). When incremented, this 16-byte counter shall be treated as a big endian number.

This mechanism can reduce per-PDU overhead of transmitting the full counter. At the most 2^32 PDUs can be encrypted with a single MTK.

The plaintext PDU shall be encrypted using the active MBS_Traffic_key (MTK) derived from MAK and MGTEK, according to CTR mode specification. A different 128-bit counter value is used to encrypt each 128-bit block within a PDU.

The processing yields a payload that is 8 bits longer than the plaintext payload. See Figure 173.

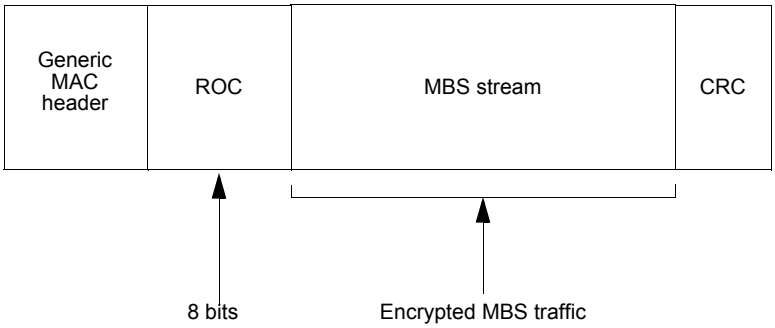

Figure 173—MBS MAC PDU ciphertext payload format

7.5.1.4 Data encryption with AES in CBC mode

If the data encryption algorithm identifier in the cryptographic suite of an SA equals 0x03, data on connections associated with that SA shall use the CBC mode of the AES algorithm (NIST Special Publication 800-38A and FIPS 197) to encrypt the MAC PDU payloads.

Residual termination block processing shall be used to encrypt the final block of plaintext when the final block is less than the cipher block size. Given a final block having n bits, where n is less than the cipher block size m, the next-to-last ciphertext block shall be divided into two parts. One of the two parts is n bits, the other part is m-n bits. The former shall be sent to receiver as the final block ciphertext. Padding the final short block to obtain a complete plaintext block, then encrypt it with AES algorithm in CBC mode. The encryption and decryption procedure is depicted in Figure 174.

In the special case when the payload portion of the MAC PDU is less than the cipher block size, the *n* MSBs of the generated CBC IV, corresponding to the number of bits of the payload, shall be XORed with the n bits of the payload to generate the short cipher block.

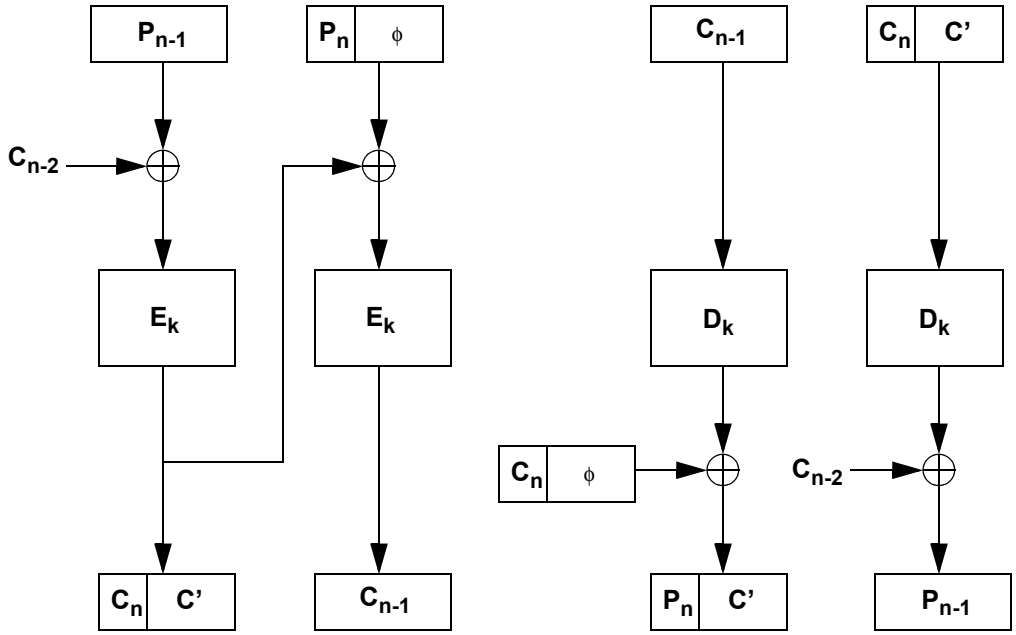

Figure 174—Residual termination block processing with CTS

7.5.1.4.1 CBC IV generation

The Zero Hit Counter is initialized into zero when the Key Reply message is received. The Zero Hit Counter increases by one if the previous PHY Frame number is equal to or greater than the current PHY Frame number.

The CBC IV is generated as the result of the AES block ciphering algorithm with the key of TEK. Its plain text for the CBC IV generation is calculated with the exclusive-or (XOR) of (1) the CBC IV parameter value included in the TEK keying information, and (2) the 128-bits content which is a concatenation of the 48-bit MAC PDU header, the 32-bit PHY Synchronization value of the MAP that a data transmission occurs, and the XOR value of the 48-bit SS MAC address and the Zero Hit Counter.

The CBC IV shall be updated every MAC PDUs. See Figure 175.

If the MAC PDU is decoded from several channel coded blocks transmitted at different frames in HARQ operation, the MAC PDU payload shall be decrypted with the CBC IV value which are generated from the PHY Synchronization value of the MAP when spid = 0.

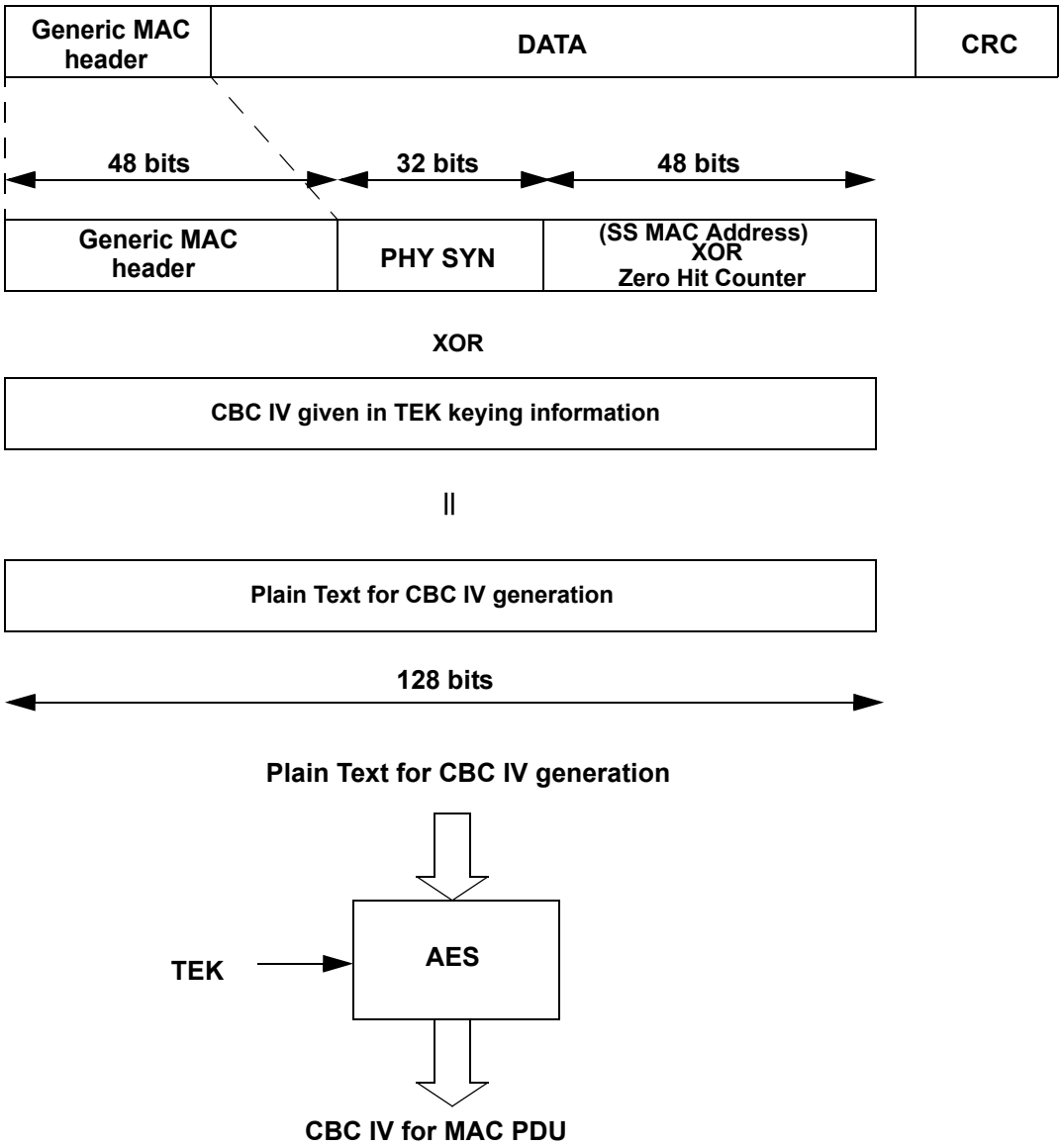

Figure 175—CBC IV generation

7.5.2 Encryption of TEK

The options listed in 7.5.2.1 through 7.5.2.3 may be used.

7.5.2.1 Encryption of TEK with 3-DES

This method of encrypting the TEK shall be used for SAs with the TEK encryption algorithm identifier in the cryptographic suite equal to 0x01.

The BS encrypts the value fields of the TEK in the Key Reply messages it sends to client SS. This field is encrypted using two-key 3-DES in the EDE mode (Schneier [B43]).

encryption: C = Ek1[Dk2[Ek1[P]]]
decryption: P = Dk1[Ek2[Dk1[C]]]
P = Plaintext 64-bit TEK
C = Ciphertext 64-bit TEK
k1 = most significant 64 bits of the 128-bit KEK
k2 = least significant 64 bits of the 128-bit KEK
E[ ] = 56-bit DES ECB mode encryption
D[ ] = 56-bit DES ECB decryption

Subclause 7.5.4 describes how the KEK is derived from the AK.

7.5.2.2 Encryption of TEK with RSA

The RSA method of encrypting the TEK (PKCS #1 v2.0) shall be used for SAs with the TEK encryption algorithm identifier in the cryptographic suite equal to 0x02. When the RSA algorithm is in use for TEK encryption algorithm, the TEK is encrypted with SS's public key using the RSA algorithm. In this case, KEK is not used.

7.5.2.3 Encryption of TEK-128 with AES

This method of encrypting the TEK-128 shall be used for SAs with the TEK encryption algorithm identifier in the cryptographic suite equal to 0x03.

The BS encrypts the value fields of the TEK-128 in the Key Reply messages it sends to client SS. This field is encrypted using 128-bit AES in ECB mode.

encryption: C = Ek1[P]
decryption: P = Dk1[C]
P = Plaintext 128-bit TEK
C = Ciphertext 128-bit TEK
k1 = the 128-bit KEK
E[ ] = 128-bit AES ECB mode encryption
D[ ] = 128-bit AES ECB decryption

Subclause 7.5.4 describes how the KEK is derived from the AK.

7.5.2.4 Encryption of TEK-128 with AES key wrap

This method of encrypting the TEK-128 shall be used for SAs with the TEK encryption algorithm identifier in the cryptographic suite equal to 0x04.

The BS encrypts the value fields of the TEK-128 in the Key Reply messages it sends to client SS. This field is encrypted using the AES key wrap algorithm.

encryption: C,I = Ek[P]
decryption: P,I = Dk[C]
P = Plaintext 128-bit TEK
C = Ciphertext 128-bit TEK
I = Integrity Check Value
k = the 128-bit KEK
Ek[ ] = AES Key Wrap encryption with key k

Dk[ ] = AES Key Wrap decryption with key k

The AES key wrap encryption algorithm returns both a ciphertext and an integrity check value. The decryption algorithm returns a plaintext key and the integrity check value. The default integrity check value in the NIST AES key wrap algorithm shall be used.

7.5.3 Calculation of HMAC-Digests

The calculation of the keyed hash in the HMAC-Digest attribute and the HMAC Tuple shall use the HMAC (IETF RFC 2104) with the secure hash algorithm SHA-1 (FIPS 180-1). The DL authentication key HMAC_KEY_D shall be used for authenticating messages in the DL direction. The UL authentication key HMAC_KEY_U shall be used for authenticating messages in the UL direction. UL and DL message authentication keys are derived from the AK (see 7.5.4 for details). The HMAC Sequence number in the HMAC Tuple shall be equal to the AK Sequence Number of the AK from which the HMAC_KEY_x was derived.

The HMAC sequence number in the HMAC tuple or Short-HMAC tuple shall be equal to the AK sequence number of the AK from which the HMAC_KEY_x was derived.

In the case of PKMv2, Short-HMAC digest calculations shall include the HMAC_PN_* that should be concatenated after the MAC management message.

7.5.4 Derivation of TEKs, KEKs, and message authentication keys

The BS generates AKs, TEKs, and IVs. A random or pseudo-random number generator shall be used to generate AKs and TEKs. A random or pseudo-random number generator may also be used to generate IVs. Regardless of how they are generated, IVs shall be unpredictable. Recommended practices for generating random numbers for use within cryptographic systems are provided in IETF RFC 1750 [B30]. In case of using RSA algorithm, KEK is not used.

7.5.4.1 DES keys

FIPS 81 defines 56-bit DES keys as 8-byte (64-bit) quantities where the 7 MSBs (i.e., 7 leftmost bits) of each byte are the independent bits of a DES key, and the LSB (i.e., rightmost bit) of each byte is a parity bit computed on the preceding seven independent bits and adjusted so that the byte has odd parity.

PKM does not require odd parity. The PKM protocol generates and distributes 8-byte DES keys of arbitrary parity, and it requires that implementations ignore the value of the LSB of each.

7.5.4.2 Key encryption keys (KEKs)

The keying material for two-key 3-DES consists of two distinct (single) DES keys.

The 3-DES KEK used to encrypt the TEK is derived from a common AK. The KEK shall be derived as follows:

KEK = Truncate(SHA(K_PAD_KEK | AK),128)
K_PAD_KEK = 0x53 repeated 64 times, i.e., a 512-bit string.

Truncate(x, y) is defined as the last 'y' bits of x if and only if $y \leq x$. The values 'x" and "y" shall be aligned to byte boundaries.

The following examples illustrate the expected output of Truncate given inputs for "x" in hexidecimal, decimal and binary:

Hex:
Truncate(0x66,0x2) = 0x2
Truncate(0x65,0x2) = 0x1

Decimal:
Truncate(102,2) = 2
Truncate(101,2) = 1

Binary:
Truncate(1100110,10) = 10
Truncate(1100101,10) = 01

SHA(x|y) denotes the result of applying the SHA-1 function to the concatenated bit strings x and y.

The keying material of 3-DES consists of two distinct DES keys. The most significant 64 bits of the KEK shall be used in the encrypt operation. The least significant 64 bits shall be used in the decrypt operation.

Example:

KEK=0xAB CD 12 34 DC BA 43 21 12 34 DC BA AB AC BC BD

Encypt Key = 0xAB CD 12 34 DC BA 43 21, where 0xAB = 10101011, 0xCD = 11001101 and so on

Decrypt Key = 0x12 34 DC BA AB AC BC BD

The construction of the KEK for use with TEK-128 keys shall be the same as for 3-DES KEKs except that the full 128 bits of the KEK are used directly as the 128-bit AES key, instead of the KEK being split into two 64-bit DES keys.

7.5.4.3 HMAC authentication keys

The HMAC authentication keys are derived as follows:

HMAC_KEY_D = SHA(H_PAD_D|AK)
HMAC_KEY_U = SHA(H_PAD_U|AK)
HMAC_KEY_S = SHA(H_PAD_D|Operator Shared Secret)

with

H_PAD_D = 0x3A repeated 64 times
H_PAD_U = 0x5C repeated 64 times

7.5.4.4 Cipher-based message authentication code (CMAC)

A BS or SS may support management message integrity protection based on CMAC—together with the AES block cipher. The CMAC construction as specified in NIST Special Publication 800-38B shall be used.

7.5.4.4.1 Calculation of CMAC value

The calculation of the keyed hash value contained in the CMAC Digest attribute and the CMAC Tuple shall use the CMAC algorithm with AES. The DL authentication key CMAC_KEY_D shall be used for authenticating messages in the DL direction. The UL authentication key CMAC_KEY_U shall be used for

authenticating messages in the UL direction. UL and DL message authentication keys are derived from the AK (see 7.2.2.2.9 for details).

For authentication broadcast messages (in the DL only) a CMAC_KEY_GD shall be used (one for each group), group authentication key is derived from GKEK.

The CMAC Digest and CMAC Tuple attributes shall be only applicable to the PKM version 2. In the PKM version 2 protocol, the AKID used in the computation of the CMAC value shall be the 64-bit AKID of the AK from which the CMAC_KEY_x was derived. See 6.3.2.3.9.17 for the SA-TEK-Challenge message attributes in which the mapping between the AK sequence number and the AKID is communicated, and see 7.2.2.4.1 for a description of the AK context that contains the AK and AKID.

The CMAC Packet Number Counter, CMAC_PN_*, is a 4-byte sequential counter that is incremented for each MAC Management Message which contains a CMAC Tuple or CMAC Digest TLV in the context of UL messages by the SS, and in the context of DL messages by the BS. The BS shall also maintain a separate CMAC_PN_* for multicast packets per each GSA and increment that counter in the context of each multicast packet from the group. If basic CID is unknown (e.g., in network reentry situation) then CID 0 should be used.

The CMAC_PN_* is part of the CMAC security context and shall be unique for each MAC management message with the CMAC tuple or digest. Any tuple value of {CMAC_PN_*, CMAC_KEY_*} shall not be used more than once. The reauthentication process should be initiated (by BS or SS) to establish a new AK before the CMAC_PN_* reaches the end of its number space.

The digest shall be calculated over a field consisting of the AKID followed by the CMAC_PN_*, expressed as an unsigned 32-bit number, followed by the 16-bit CID on which the message is sent, followed by 16-bit of zero padding (for the header to be aligned with AES block size) and followed by the entire MAC management message with the exception of the CMAC TLV.

The LSBs of the digest shall be truncated to yield a 64-bit length digest. Note: This is different from the recommendation in NIST special publication 800-38B where the MSB is used to derive the CMAC value.

i.e., if CMAC_KEY_* is derived from AK:

> CMAC value ⇐ Truncate(CMAC (CMAC_KEY_*, AKID | CMAC_PN | CID |16-bit zero padding | MAC_Management_Message), 64).

If CMAC_KEY_* is derived from a key other than AK, such as GKEK or EIK, CMAC_PAD is used instead of AKID.

> CMAC value ⇐ Truncate(CMAC (CMAC_KEY_*, CMAC_PAD | CMAC_PN | CID |16-bit zero padding | MAC_Management_Message), 64) with CMAC_PAD = 0x7E repeated 8 times

If the digest is included in a MAC PDU that has no CID, e.g., A RNG-REQ message, the CID used shall take the value of the basic CID. If basic CID is unknown (e.g., in network reentry situation) then CID 0 should be used.

7.5.4.5 Derivation of TEKs, KEKs, message authentication keys and GKEKs in PKMv2

7.5.4.5.1 AES KEKs in PKMv2

The construction of the KEK for use with TEK-128 keys shall be the same as for 3-DES KEKs as described in 7.5.4.2 except that the full 128 bits of the KEK are used directly as the 128-bit AES key, instead of the KEK being split into two 64-bit DES keys.

7.5.4.5.2 Encryption of GKEK in PKMv2

The BS encrypts the value fields of the GKEK in the PKMv2 Group-Key-Update-Command message for the GKEK update mode and sends the encrypted GKEK to each SS served with the specific multicast service or the broadcast service. The following options for encryption of GKEK may be used. The encryption algorithm is determined according to the value of cryptographic suite. Also, the value of cryptographic suite for GKEK encryption is identical to the one for GTEK encryption.

7.5.4.5.2.1 Encryption of GKEK with 3-DES in PKMv2

This method of encrypting the GKEK shall be used for SAs with the TEK (or GTEK) encryption algorithm identifier in the cryptographic suite equal to 0x01.

The BS encrypts the value fields of the GKEK in the Key Update Command messages (for the GKEK update mode) it sends to client SS. This field is encrypted using two-key 3-DES in the EDE mode.

Encryption: C = Ek1[Dk2[Ek1[P]]]
Decryption: P = Dk1[Ek2[Dk1[C]]]
P = Plaintext 128-bit GKEK
C = Ciphertext 128-bit GKEK
k1 = most significant 64 bits of the 128-bit KEK
k2 = least significant 64 bits of the 128-bit KEK
E [ ] = 56-bit DES ECB mode encryption
D [ ] = 56-bit DES ECB mode decryption

7.5.4.5.2.2 Encryption of GKEK with RSA in PKMv2

The RSA method of encrypting the GKEK (PKCS #1 v2.1, RSA Cryptography Standard, RSA Laboratories, June 2002) shall be used for SAs with the TEK (or GTEK) encryption algorithm identifier in the cryptographic suite equal to 0x02.

7.5.4.5.2.3 Encryption of GKEK with ECB mode AES in PKMv2

This method of encrypting the GKEK shall be used for SAs with the TEK (or GTEK) encryption algorithm identifier in the cryptographic suite equal to 0x03.

The BS encrypts the value fields of the GKEK in the PKMv2 Group-Key-Update-Command messages (for the GKEK update mode) it sends to client SS. This field is encrypted using 128-bit AES in ECB mode.

Encryption: C = Ek1[P]
Decryption: P = Dk1[C]
P = Plaintext 128-bit GKEK
C = Ciphertext 128-bit GKEK
k1 = the 128-bit KEK
E [ ] = 128-bit AES ECB mode encryption
D [ ] = 128-bit AES ECB mode decryption

7.5.4.5.2.4 Encryption of GKEK with AES key wrap in PKMv2

This method of encrypting the GKEK shall be used for SAs with the TEK (or GTEK) encryption algorithm identifier in the cryptographic suite equal to 0x04.

The BS encrypts the value fields of the GKEK in the PKMv2 Group-Key-Update-Command messages (for the GKEK update mode) it sends to client SS. This field is encrypted using 128-bit AES key wrap algorithm. This 128-bit AES key wrap algorithm is defined only for PKM version 2.

Encryption: C,I = Ek[P]
Decryption: P,I = Dk[C]
P = Plaintext 128-bit GKEK
C = Ciphertext 128-bit GKEK
k = the 128-bit KEK derived from the AK
Ek[ ] = AES Key Wrap encryption with key k
Dk[ ] = AES Key Wrap decryption with key k

7.5.4.6 Key derivation functions for PKMv2

7.5.4.6.1 Dot16KDF for PKMv2

The Dot16KDF algorithm is a CTR mode construction that may be used to derive an arbitrary amount of keying material from source keying material.

In the case that the HMAC/CMAC setting in the message authentication code mode is set to CMAC, the algorithm is defined as follows:

```
Dot16KDF(key, astring, keylength)
{
        result = null;
        Kin = Truncate (key, 128);
        for (i = 0; i <= int((keylength-1)/128); i++) {
                result = result | CMAC(Kin, i | astring | keylength);
        }
        return Truncate (result, keylength);
}
```

In the case that the HMAC/CMAC setting in the authentication policy bits is set to HMAC, the algorithm is defined as follows:

```
Dot16KDF(key, astring, keylength)
{
        result = null;
        Kin = Truncate (key, 160);
        For (i=0; i <= int( (keylength-1)/160 ); i++) {
                result = result | SHA-1( i| astring | keylength | Kin);
        }
        return Truncate (result, keylength);
}
```

When CMAC algorithm is used, the size of the variables ‘i’ is 4 octets (32 bits) in most-significant-bit first order. ‘astring’ is a character string. For example, if ‘astring’ is ‘test’, then ‘astring’ is: 0x74657374 (no null-termination). The size of ‘keylength’ field is 4 octets (32 bits) in most-significant-bit first order.

The key is a cryptographic key that is used by the underlying digest algorithm (SHA-1 or CMAC-AES). astring is an octet string used to alter the output of the algorithm. keylength is used to determine the length of key material to generate and is used in the digest input data to prevent extension attacks. The Truncate() function is defined in 7.5.4.2.

7.5.5 Public-key encryption of AK

AKs in Auth Reply messages shall be RSA public-key encrypted, using the SS's public key. The protocol uses 65537 (0x010001) as its public exponent and a modulus length of 1024 bits. The PKM protocol employs the RSAES-OAEP encryption scheme (PKCS #1). RSAES-OAEP requires the selection of a hash function, a mask-generation function, and an encoding parameter string. The default selections specified in PKCS #1 shall be used when encrypting the AK. These default selections are SHA-1 for the hash function, MGF1 with SHA-1 for the mask-generation function, and the empty string for the encoding parameter string.

7.5.6 Digital signatures

The Protocol employs the RSA Signature Algorithm (PKCS #1) with SHA-1 (FIPS 186-2) for both of its certificate types.

As with its RSA encryption keys, Privacy uses 65537 (0x010001) as the public exponent for its signing operation. Manufacturer CAs shall employ signature key modulus lengths of at least 1024 bits and no greater than 2048 bits.

7.6 Certificate profile

7.6.1 Certificate format

This subclause describes the X.509 (IETF RFC 2459) Version 3 certificate format and certificate extensions used in IEEE 802.16 compliant SSs. Table 210 summarizes the basic fields of an X.509 Version 3 certificate.

Table 210—Basic fields of an X.509 Version 3 certificate

X.509 v3 field	Description
tbsCertificate.version	Indicates the X.509 certificate version. Always set to v3 (value of 2).
tbsCertificate.serialNumber	Unique integer the issuing CA assigns to the certificate.
tbsCertificate.signature	Object identifier (OID) and optional parameters defining algorithm used to sign the certificate. This field shall contain the same algorithm identifier as the signatureAlgorithm field.
tbsCertificate.issuer	Distinguished Name of the CA that issued the certificate.
tbsCertificate.validity	Specifies when the certificate becomes active and when it expires.
tbsCertificate.subject	Distinguished Name identifying the entity whose public key is certified in the subjectpublic key information field.
tbsCertificate.subjectPublicKeyInfo	Field contains the public key material (public key and parameters) and the identifier of the algorithm with which the key is used.
tbsCertificate.issuerUniqueID	Optional field to allow reuse of issuer names over time.
tbsCertificate.subjectUnique ID	Optional field to allow reuse of subject names over time.
tbsCertificate.extensions	The extension data.

Table 210—Basic fields of an X.509 Version 3 certificate *(continued)*

X.509 v3 field	Description
signatureAlgorithm	OID and optional parameters defining algorithm used to sign the certificate. This field shall contain the same algorithm identifier as the signature field in tbsCertificate.
signatureValue	Digital signature computed upon the ASN.1 DER encoded tbsCertificate.

All certificates described in this specification shall be signed with the RSA signature algorithm using SHA-1 as the one-way hash function. The RSA signature algorithm is described in PKCS #1; SHA-1 is described in FIPS 180-1. Restrictions posed on the certificate values are described in 7.6.1.1 through 7.6.1.8.

7.6.1.1 tbsCertificate.validity.notBefore and tbsCertificate.validity.notAfter

SS certificates shall not be renewable and shall thus have a validity period greater than the operational lifetime of the SS. A Manufacturer CA certificate's validity period should exceed that of the SS certificates it issues. The validity period of an SS certificate shall begin with the date of generation of the device's certificate; the validity period should extend out to at least 10 years after that manufacturing date. Validity periods shall be encoded as UTCTime. UTCTime values shall be expressed Greenwich Mean Time (Zulu) and shall include seconds (i.e., times are YYMMDDHHMMSSZ), even where the number of seconds is zero.

7.6.1.2 tbsCertificate.serialNumber

Serial numbers for SS certificates signed by a particular issuer shall be assigned by the manufacturer in increasing order. Thus, if the tbsCertificate.validity.notBefore field of one certificate is greater than the tbsCertificate.validity.notBefore field of another certificate, then the serial number of the first certificate shall be greater than the serial number of the second certificate.

7.6.1.3 tbsCertificate.signature and signatureAlgorithm

All certificates described in this specification shall be signed with the RSA signature algorithm, using SHA-1 as the one-way hash function. The RSA signature algorithm is described in PKCS #1; SHA-1 is described in FIPS 180-1. The ASN.1 OID used to identify the "SHA-1 with RSA" signature algorithm is

```
sha-1WithRSAEncryption OBJECT IDENTIFIER ::=
{ iso(1) member-body(2) us(840) rsadsi(113549) pkcs(1) pkcs-1(1) 5}
```

When the sha-1WithRSAEncryption OID appears within the ASN.1 type AlgorithmIdentifier, as is the case with both tbsCertificate.signature and signatureAlgorithm, the parameters component of that type is the ASN.1 type NULL.

7.6.1.4 tbsCertificate.issuer and tbsCertificate.subject

X.509 Names are SEQUENCES of RelativeDistinguishedNames, which are in turn SETs of AttributeTypeAndValue. AttributeTypeAndValue is a SEQUENCE of an AttributeType (an OBJECT IDENTIFIER) and an AttributeValue. The value of the countryName attribute shall be a two-character PrintableString, chosen from ISO 3166; all other AttributeValues shall be encoded as either

T.61/TeletexString or PrintableString character strings. The PrintableString encoding shall be used if the character string contains only characters from the PrintableString set. Specifically:

abcdefghijklmnopqrstuvwxyz
ABCDEFGHIJKLMNOPQRSTUVWXYZ
0123456789
'()+,–./:=? and space

The T.61/TeletexString shall be used if the character string contains other characters. The following OIDs are needed for defining issuer and subject Names in PKM certificates:

id-at OBJECT IDENTIFIER ::= {joint-iso-ccitt(2) ds(5) 4}
id-at-commonName OBJECT IDENTIFIER ::= {id-at 3}
id-at-countryName OBJECT IDENTIFIER ::= {id-at 6}
id-at-localityName OBJECT IDENTIFIER ::= {id-at 7}
id-at-stateOrProvinceName OBJECT IDENTIFIER ::= {id-at 8}
id-at-organizationName OBJECT IDENTIFIER ::= {id-at 10}
id-at-organizationalUnitName OBJECT IDENTIFIER ::= {id-at 11}

The following subclauses describe the attributes that comprise the subject Name forms for each type of PKM certificate. Note that the issuer name form is the same as the subject of the issuing certificate. Additional attribute values that are present but unspecified in the following forms should not cause a device to reject the certificate.

7.6.1.4.1 Manufacturer certificate

countryName=<Country of Manufacturer>
[stateOrProvinceName=<state/province>]
[localityName=<City>]
organizationName=<Company Name>
organizationalUnitName=WirelessMAN
[organizationalUnitName=<Manufacturing Location>]
commonName=<Company Name> <Certification Authority>

The countryName, organizationName, and commonName attributes shall be included and shall have the values shown. The organizationalUnitName having the value "WirelessMAN" shall be included. The organizationalUnitName representing manufacturing location should be included. If included, it shall be preceded by the organizationalUnitName having value "WirelessMAN." The stateOrProvinceName and localityName may be included. Other attributes are not allowed and shall not be included.

7.6.1.4.2 SS certificate

countryName=<Country of Manufacturer>
organizationName=<Company Name>
organizationalUnitName=<manufacturing location>
commonName=<Serial Number>
commonName=<MAC Address>

The MAC address shall be the SS's MAC address. It is expressed as six pairs of hexadecimal digits separated by colons (:), e.g., "00:60:21:A5:0A:23." The Alpha HEX characters (A–F) shall be expressed as uppercase letters.

The organizationalUnitName in an SS certificate, which describes the modem's manufacturing location, should be the same as the organizationalUnitName in the issuer Name describing a manufacturing location.

The countryName, organizationName, organizationalUnitName, and commonName attributes shall be included. Other attributes are not allowed and shall not be included.

7.6.1.4.3 BS certificate

countryName=<Country of Operation>
organizationName=< Name of Infrastructure Operator>
organizationalUnitName=<WirelessMAN>
commonName=<Serial Number>
commonName=<BSID>

The BSID field shall contain the operator-defined BSID.[23] It is expressed as six pairs of hexadecimal digits separated by colons (:), e.g., "00:60:21:A5:0A:23." The Alpha HEX characters (A–F) shall be expressed as uppercase letters.

The attributes listed above shall be included.

7.6.1.5 tbsCertificate.subjectPublicKeyInfo

The tbsCertificate.subjectPublicKeyInfo field contains the public key and the public key algorithm identifier. The tbsCertificate.subjectPublicKeyInfo.algorithm field is an AlgorithmIdentifier structure. The AlgorithemIdentifier's algorithm shall be RSA encryption, identified by the following OID:

```
pkcs-1 OBJECT IDENTIFIER ::= { iso(1) member-body(2) us(840)
rsadsi(113549) pkcs(1) 1}
rsaEncryption OBJECT IDENTIFIER ::= { pkcs-1 1}
```

The AlgorithmIdentifier's parameters field shall have ASN.1 type NULL. The RSA public key shall be encoded using the ASN.1 type RSAPublicKey:

```
RSAPublicKey ::= SEQUENCE {
modulus INTEGER, -- n
publicExponent INTEGER, -- e -- }
```

where modulus is the modulus *n*, and publicExponent is the public exponent *e*. The DER encoded RSAPublicKey is the value of the BIT STRING tbsCertificate.subjectPublicKeyInfo.subjectPublicKey.

7.6.1.6 tbsCertificate.issuerUniqueID and tbsCertificate.subjectUniqueID

The issuerUniqueID and subjectUniqueID fields shall be omitted for all of the PKM's certificate types.

7.6.1.7 tbsCertificate.extensions

7.6.1.7.1 SS certificates

SS certificates may contain noncritical extensions; they shall not contain critical extensions. If the KeyUsage extension is present, the keyAgreement and keyEncipherment bits shall be turned on, keyCertSign and cRLSign bits shall be turned off, and all other bits should be turned off.

[23]The BSID is an operator-defined value, consequently the BS certificate is typically issued by the Operator, who must ensure that the BS ID is unique within the operator's network.

7.6.1.7.2 Manufacturer certificates

Manufacturer certificates may contain the Basic Constraints extension. If included, the Basic Constraints extension may appear as a critical extension or as a noncritical extension. Manufacturer certificates may contain noncritical extensions; they shall not contain critical extensions other than, possibly, the Basic Constraints extension. If the KeyUsage extension is present in a Manufacturer certificate, the keyCertSign bit shall be turned on and all other bits should be turned off.

7.6.1.8 signatureValue

In all three PKM certificate types, the signatureValue contains the RSA (with SHA-1) signature computed over the ASN.1 DER encoded tbsCertificate. The ASN.1 DER encoded tbsCertificate is used as input to the RSA signature function. The resulting signature value is ASN.1 encoded as a bit string and included in the Certificate's signatureValue field.

7.6.2 SS certificate storage and management in the SS

Manufacturer-issued SS certificates shall be stored in SS permanent, write-once memory. SSs that have factory-installed RSA private/public key pairs shall also have factory-installed SS certificates. SSs that rely on internal algorithms to generate an RSA key pair shall support a mechanism for installing a manufacturer-issued SS certificate following key generation. The CA certificate of the Manufacturer CA that signed the SS certificate shall be embedded into the SS software. If a manufacturer issues SS certificates with multiple Manufacturer CA certificates, the SS software shall include ALL of that manufacturer's CA certificates. The specific Manufacturer CA certificate installed by the SS [i.e., advertised in Authentication Information messages and returned by the management information base (MIB) object] shall be that identifying the issuer of that modem's SS certificate.

7.6.3 Certificate processing and management in the BS

PKM employs digital certificates to allow BSs to verify the binding between an SS's identity (encoded in an X.509 digital certificate's subject names) and its public key. The BS does this by validating the SS certificate's certification path or chain. Validating the chain means verifying the Manufacturer CA Certificate through some means.

7.7 Preauthentication

In anticipation of an HO, an MS may seek to use preauthentication to facilitate an accelerated reentry at a particular target BS.

Preauthentication results in establishment of an AK (with a unique AK name) in the MS and target BS. The specific mechanism for preauthentication is out of the scope of this specification.

7.8 PKMv2

7.8.1 PKMv2 SA-TEK 3-way handshake

The AK can be derived in one of three different ways depending on the authentication scheme used as documented in 7.2.2.2.3. Before the 3-way handshake begins, the BS and SS shall both derive a shared KEK and HMAC/CMAC keys as per 7.2.2.2.

The PKMv2 SA-TEK 3-way handshake sequence proceeds as follows:

a) During initial network entry or reauthorization, the BS shall send PKMv2 SA-TEK-Challenge (including a random number BS_Random) to the SS after protecting it with the HMAC/CMAC Tuple. If the BS does not receive PKMv2 SA-TEK-Request from the SS within SAChallengeTimer, it shall resend the previous PKMv2 SA-TEK-Challenge up to SAChallengeMaxResends times. If the BS reaches its maximum number of resends, it shall: initiate another full authentication or drop the SS. If SS had been in the midst of an EAP exchange and had been awaiting notification of completion of the exchange through PKMv2 EAP Transfer with EAP-Success, or PKMv2 Authenticated EAP Transfer with EAP-Success, and the SS instead receives SA-TEK-Challenge signed with a CMAC derived from the new key material then the SS shall first treat the SA-TEK-Challenge as receipt of PKMv2 EAP Transfer with EAP-Success, or PKMv2 Authenticated EAP Transfer with EAP-Success, and then the SS shall process the SA-TEK-Challenge as if it had received the message after normally receiving the preceding PKMv2 EAP Transfer with EAP-Success, or PKMv2 Authenticated EAP Transfer with EAP-Success.

b) If HO Process Optimization Bit 1 is set to 1 indicating that PKM Authentication phase is omitted and HO Process Optimization Bit 2 is set to 0 during network re-entry or handover, the BS updates TEKs by appending the SA-TEK-Update TLV to RNG-RSP message.

c) The SS shall send PKMv2 SA-TEK-Request to the BS after protecting it with the HMAC/CMAC. If the SS does not receive PKMv2 SA-TEK-Response from the BS within SATEKTimer, it shall resend the request. The SS may resend the PKMv2 SA-TEK-Request up to SATEKRequestMaxResends times. If the SS reaches its maximum number of resends, it shall initiate another full authentication or attempt to connect to another BS. The SS shall include, through the Security Negotiation Parameters attribute, the security capabilities that it included in the SBC-REQ message during the basic capabilities negotiation phase.

d) Upon receipt of PKMv2 SA-TEK-Request, a BS shall confirm that the supplied AKID refers to an AK that it has available. If the AKID is unrecognized, the BS shall ignore the message. The BS shall verify the HMAC/CMAC. If the HMAC/CMAC is invalid, the BS shall ignore the message. The BS shall verify that the BS_Random in the SA TEK Request matches the value provided by the BS in the SA Challenge message. If the BS_Random value does not match, the BS shall ignore the message. In addition, the BS shall verify the SS's security capabilities encoded in the Security Negotiation Parameters attribute against the security capabilities provided by the SS through the SBC-REQ message. If security negotiation parameters do not match, the BS should report the discrepancy to higher layers.

e) Upon successful validation of the PKMv2 SA-TEK-Request, the BS shall send PKMv2 SA-TEK-Response back to the SS. The message shall include a compound TLV list each of which identifies the Primary and static SAs, their SA identifiers (SAID) and additional properties of the SA (e.g., type, cryptographic suite) that the SS is authorized to access. After the MS has received the SA-TEK -Response message and verified the authenticity of the message the MS shall start using the new AK context for all UL management messages. The MS shall maintain the old context and use it to validate messages received from the BS using this AK context for as long as the frame number included in the SA-TEK-Response message has not been reached. The BS shall continue using the old AK context until it receives a management message from the MS using the new AK context, after which it shall start using the new AK context for DL management messages. Regardless of having received any UL message authenticated using the new AK context, the BS shall discard the old context upon reaching the frame number included in the last SA-TEK-Response message sent to the MS. At this point in time the 3-way handshake is considered to have successfully completed. In case of HO, the details of any Dynamic SAs that the requesting MS was authorized in the previous serving BS are also included. In addition, the BS shall include, through the Security Negotiation Parameters attribute, the security capabilities that it wishes to specify for the session with the SS (these will generally be the same as the ones insecurely negotiated in SBC-REQ/RSP).

   Additionally, in case of HO, for each active SA in previous serving BS, corresponding TEK, GTEK and GKEK parameters are also included. Thus, SA_TEK_Update provides a shorthand method for renewing active SAs used by the MS in its previous serving BS. The TLVs specify SAID in the

target BS that shall replace active SAID used in the previous serving BS and also "older" TEK-Parameters and "newer" TEK-Parameters relevant to the active SAIDs. The update may also include multicast/broadcast Group SAIDs (GSAIDs) and associated GTEK-Parameters pairs.

In case of unicast SAs, the TEK-Parameters attribute contains all of the keying material corresponding to a particular generation of an SAID's TEK. This would include the TEK, the TEK's remaining key lifetime, its key sequence number and the CBC IV. The TEKs are encrypted with KEK.

In case of group or multicast SAs, the TEK-Parameters attribute contains all of the keying material corresponding to a particular generation of a GSAID's GTEK. This would include the GTEK, the GTEK's remaining key lifetime, the GTEK's key sequence number, the associated GKEK sequence number and the cipher block chaining (CBC) initialization vector. The type and length of the GTEK is equal to corresponding values of the TEK. The GKEK should be identically shared within the same multicast group or the MBS group. Unlike the PKMv2 Group-Key-Update-Command, the GTEKs and GKEKs are encrypted with the negotiated TEK encryption algorithm because they are transmitted as unicast messages. This GKEK-Parameters compound TLV includes the GKEK, the GKEK's remaining lifetime and the GKEK sequence number.

Multiple iterations of these TLVs may occur suitable to re-creating and reassigning all active SAs and their (G)TEK pairs for the SS from its previous serving BS. If any of the Security Associations parameters change, then those Security Associations parameters encoding TLVs that have changed shall be added.

The HMAC/CMAC shall be the final attribute in the message's attribute list.

f) Upon receipt of PKMv2 SA-TEK-Response, an SS shall verify the HMAC/CMAC. If the HMAC/CMAC is invalid, the SS shall ignore the message. Upon successful validation of the received PKMv2 SA-TEK-Response, the SS shall install the received TEKs and associated parameters appropriately. Verification of HMAC/CMAC is done as per subclauses 7.5.3 and 7.5.4.4.

   The SS also shall verify the BS's security negotiation parameters TLV encoded in the Security Negotiation Parameters attribute against the security negotiation parameters TLV provided by the BS through the SBC-RSP message. If security capabilities do not match, the SS should report the discrepancy to upper layers. The SS may choose to continue the communication with the BS. In this case, the SS may adopt the security negotiation parameters encoded in SA-TEK-Response message. After the MS has received the SA-TEK -Response message and verified the authenticity of the message the MS shall start using the new AK context for all UL management messages. The MS shall maintain the old context and use it to validate messages received from the BS using this AK context for as long as the frame number included in the SA-TEK-Response message has not been reached. The BS shall continue using the old AK context until it receives a management message from the MS using the new AK context, after which it shall start using the new AK context for DL management messages. Regardless of having received any UL message authenticated using the new AK context, the BS shall discard the old context upon reaching the frame number included in the last SA-TEK-Response message sent to the MS. At this point in time the 3-way handshake is considered to have successfully completed.

7.8.2 BS and SS RSA mutual authentication and AK exchange overview

The BS mutual authentication can take place in one of two modes of operation. In one mode, only mutual authentication is used. In the other mode, the mutual authentication is followed by EAP authentication. In this second mode, the mutual authentication is performed only for initial network entry and only EAP authentication is performed in the case that authentication is needed in reentry.

SS mutual authorization, controlled by the PKMv2 Authorization state machine, is the process of

a) The BS authenticating a client SS's identity.
b) The SS authenticating the BS's identity.

c) The BS providing the authenticated SS with an AK, from which a KEK and message authentication keys are derived.

d) The BS providing the authenticated SS with the identities (i.e., the SAIDs) and properties of primary and static SAs the SS is authorized to obtain keying information for.

After achieving initial authorization, an SS periodically seeks reauthorization with the BS; reauthorization is also managed by the SS's PKMv2 Authorization state machine. An SS shall maintain its authorization status with the BS in order to be able to refresh aging TEKs and GTEKs. TEK state machines manage the refreshing of TEKs. The SS or BS may run optional authenticated EAP messages for additional authentication.

The SS sends an Authorization Request message to its BS immediately after sending the Authentication Information message. This is a request for an AK, as well as for the SAIDs identifying any Static Security SAs the SS is authorized to participate in. The Authorization Request includes (see 6.3.2.3.9.19)

— A manufacturer-issued X.509 certificate.
— A description of the cryptographic algorithms the requesting SS supports; an SS's cryptographic capabilities are presented to the BS as a list of cryptographic suite identifiers, each indicating a particular pairing of packet data encryption and packet data authentication algorithms the SS supports.
— The SS's Basic CID. The Basic CID is the first static CID the BS assigns to an SS during initial ranging-the primary SAID is equal to the Basic CID.
— A 64-bit random number generated in the SS.

In response to an Authorization Request message, a BS validates the requesting SS's identity, determines the encryption algorithm and protocol support it shares with the SS, activates an AK for the SS, encrypts it with the SS's public key, and sends it back to the SS in an Authorization Reply message. Random numbers are included in the exchange to ensure liveness. The Authorization Reply includes (see 6.3.2.3.9.20)

— The BS's X.509 certificate, used to verify the BS's identity.
— A pre-PAK encrypted with the SS's public key.
— A 4-bit PAK sequence number, used to distinguish between successive generations of AKs.
— A PAK lifetime.
— The identities (i.e., the SAIDs) and properties of the single primary and zero or more static SAs for which the SS is authorized to obtain keying information.
— The 64-bit random number generated in the SS.
— A 64-bit random number generated in the BS, used to ensure key of liveness along with the random number of SS.
— The RSA signature over all the other attributes in the auth-reply message by BS, used to assure the the authenticity of the above PKMv2 RSA-Reply messages.

An SS shall periodically refresh its AK by reissuing an Authorization Request to the BS. Reauthorization is identical to authorization. To avoid service interruptions during reauthorization, successive generations of the SS's AKs have overlapping lifetimes. Both SS and BS shall be able to support up to two simultaneously active AKs during these transition periods. The operation of the Authorization state machine's Authorization Request scheduling algorithm, combined with the BS's regimen for updating and using a client SS's AKs (see 7.4), ensures that the SS can refresh TEK keying information without interruption over the course of the SS's reauthorization periods.

After successful RSA based authorization either EAP based authorization or Authenticated EAP based authorization maybe supported according to the value of Authorization policy negotiated in the SBC-REQ/RSP messages. It shall cryptographically bind RSA and further EAP authentication.

7.8.3 Multicast and broadcast service (MBS) support

MBS is an efficient and power saving mechanism that requires PKMv2 to send multimedia broadcast information. It provides subscribers with strong protection from theft of service across broadband wireless mobile network by encrypting broadcast connections between SSs and BSs.

7.8.3.1 MBS security associations

In addition to existing three Security Association, MBS requires a MBS Group Security Association. It is the set of security information that multiple BS and one or more of its client SSs share but not bound to any MS authorization state in order to support secure and access controlled MBS content reception across the IEEE 802.16 network. Each MBS capable MS may establish a MBS security association during the MS initialization process. MBS GSAs shall be provisioned within the BS. A MBS GSA's shared information shall include the cryptographic suite employed within the GSA and key material information such as MBS authorization keys (MAKs) and MBS group traffic encryption keys (MGTEKs). The exact content of the MGSA is dependent on the MGSA's cryptographic suite. As like any other Unicast SAs, MBS GSA is also identified using 16 bit SAIDs. Each MS shall establish one or more MBS GSA with its serving BS.

Using the PKMv2 protocol, an MS receives or establishes an MBS GSA's keying material. The BS and MBS content server shall ensure that each client MS only has access to the MGSAs it is authorized to access.

An SA's keying material (e.g., MAK and MGTEK) has a limited lifetime. When the MBS content server or BS delivers MBS SA keying material to an MS, it also provides the MS with that material's remaining lifetime. It is the responsibility of the MS to request new keying material from the MBS server or BS before the set of keying material that the MS currently holds expires at the MBS Server or BS.

7.8.3.2 MBS key management

7.8.3.2.1 MAK establishment

The MAK establishment procedure in MS and BS is outside of scope of this specification.

7.8.3.2.2 MGTEK establishment

See 7.2.2.3.3 for MBSGSA and 7.2.2.2 for PKMv2 key derivation.

7.8.3.2.3 MTK establishment

See 7.2.2.2 for PKMv2 key derivation.

7.9 Multicast and broadcast rekeying algorithm (MBRA)

When MBRA is supported, the MBRA shall be used to refresh traffic keying material efficiently not for the unicast service, but for the multicast service, the broadcast service or the MBS.

7.9.1 MBRA flow

The MBRA overall flow is shown in the Figure 176.

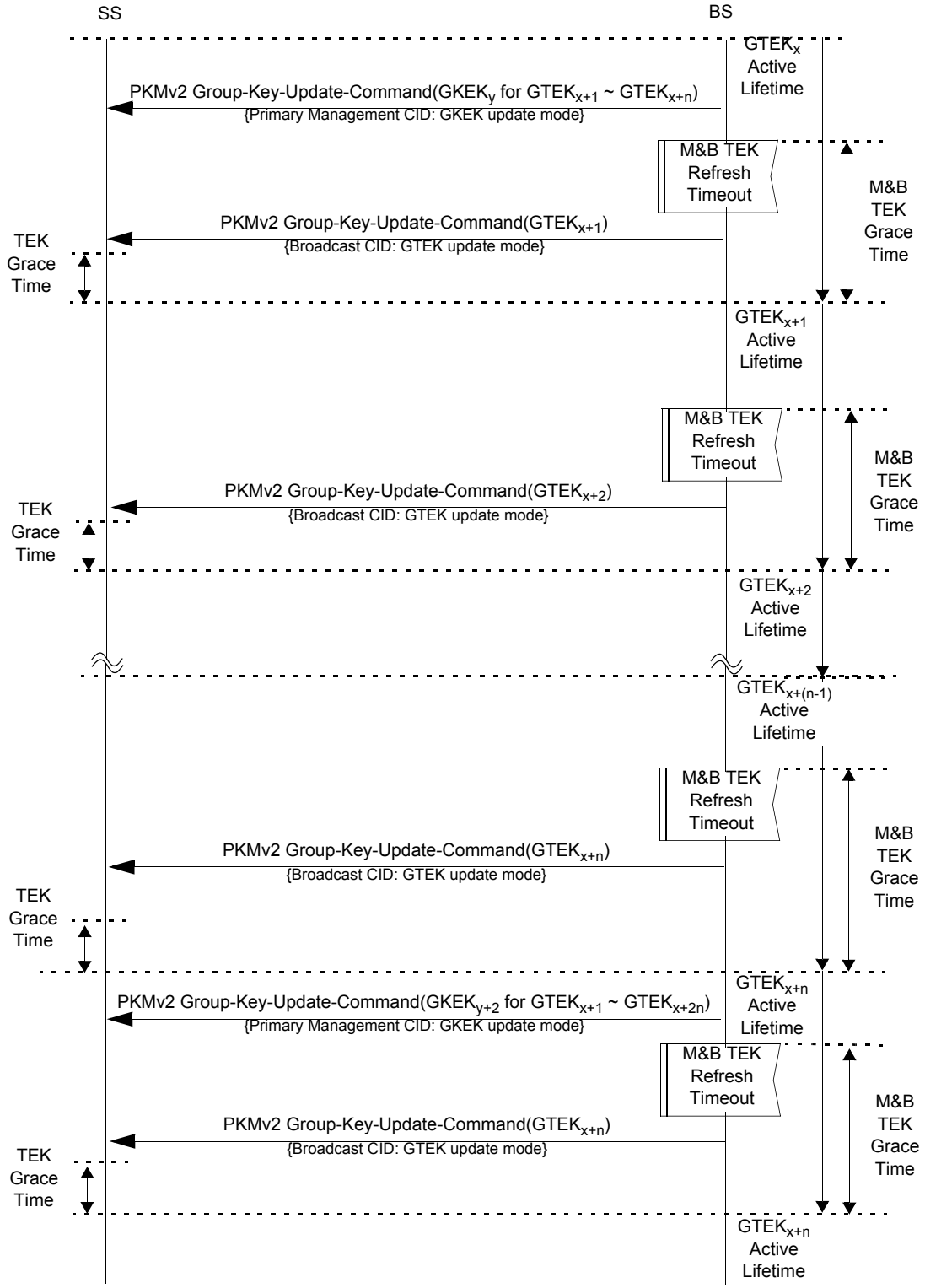

Figure 176—MBRA management

An SS may get the traffic keying material before an SS is served with the specific multicast service, the broadcast service or the MBS. The initial GTEK request exchange procedure is executed by using the PKMv2 Key Request and PKMv2 Key Reply messages that are carried on the Primary Management connection. The GTEK (Group Traffic Encryption Key) is the TEK for multicast or broadcast service. Once an SS shares the traffic keying material with a BS, an SS does not need to request the new traffic keying material. A BS updates and distributes the traffic keying material periodically by sending two PKMv2 Group-Key-Update-Command messages.

A BS manages the M&B (Multicast & Broadcast) TEK Grace Time for the respective GSA-ID in itself. The GSA-ID (Group Security Association Identifier) is the SA-ID for multicast, broadcast service or the MBS. This M&B TEK Grace Time is defined only for the multicast service or the broadcast service. This parameter means time interval (in seconds), before the estimated expiration of an old distributed GTEK. In addition, the M&B TEK Grace Time is longer than the TEK Grace Time managed in an SS.

A BS distributes updated traffic keying material by sending two PKMv2 Group-Key-Update-Command messages before old distributed GTEK is expired. The usage type of these messages is distinguished according to the Key Push Modes included in the PKMv2 Group-Key-Update-Command message.

A BS transmits the PKMv2 Group-Key-Update-Command message for the GKEK update mode in order to distribute the new GKEK. Moreover, a BS transmits the PKMv2 Group-Key-Update-Command message for the GTEK update mode in order to distribute the new GTEK.

In general, the GKEK lifetime corresponds to the *n* (integer being bigger than 1) times of the GTEK lifetime. That is, the GKEK shall be updated once while the GTEK is updated *n* times.

A BS transmits the PKMv2 Group-Key-Update-Command message for the GKEK update mode to each SS served with the specific multicast service, the broadcast service or the MBS before the current GKEK expires and the last M&B TEK Grace Time of the corresponding current GKEK starts. The purpose of the PKMv2 Group-Key-Update-Command message for the GKEK update mode is to distribute the GKEK (Group Key Encryption Key). The PKMv2 Group-Key-Update-Command message for the GKEK update mode is carried on the Primary Management connection. A BS intermittently transmits the PKMv2 Group-Key-Update-Command message for the GKEK update mode to each SS in order to reduce the BS's load in refreshing traffic key material. The GKEK is needed to encrypt the new GTEK. The GKEK may be randomly generated in a BS or a network entity (i.e., an ASA server or an MBS server).

A BS transmits the PKMv2 Group-Key-Update-Command message for the GTEK update mode carried on the broadcast connection after each M&B TEK Grace Time starts. The aim of the PKMv2 Group-Key-Update-Command message for the GTEK update mode is to distribute new GTEK and the other traffic keying material to all SSs served with the specific multicast service or the broadcast service. This GTEK is randomly generated in the same node which generates the GKEK and encrypted with already transmitted GKEK.

An SS shall be capable of maintaining two successive sets of traffic keying material per authorized GSA-ID. Through operation of its GTEK state machines, an SS shall check whether it receives new traffic keying material or not. If an SS gets new traffic keying material, then its TEK Grace Time is not operated. However, if it does not have that, then an SS shall request a new set of traffic keying material at a configurable amount of time, the TEK Grace Time, before the SS's latest GTEK is scheduled to expire.

If an SS receives the valid two PKMv2 Group-Key-Update-Command messages and shares new valid GKEK and GTEK with a BS, then that SS does not need to request a new set of traffic keying material.

If an SS does not receive at least one of two PKMv2 Group-Key-Update-Command messages, then that SS sends the Key Request message to get a new traffic keying material. A BS responds to the PKMv2 Key

Request message with the PKMv2 Key Reply message. In other words, if an SS does not get valid new GKEK or GTEK, then the GTEK request exchange procedure initiated by an SS shall be performed.

7.9.1.1 BS usage of GTEK

An SS tries to get the GTEK before an SS is served with the specific service. The initial GTEK request exchange procedure is executed by using the PKMv2 Key Request and PKMv2 Key Reply messages that are carried on the primary management connection.

A BS shall be capable of maintaining two successive sets of traffic keying material per authorized GSAID. In other words, when GKEK has been changed, a BS manages the M&B TEK Grace Time for the respective GSA-ID in itself. Through operation of its M&B TEK Grace Time, a BS shall push a new set of traffic keying material. This M&B TEK Grace Time is defined only for the multicast service or the broadcast service in a BS. This parameter means time interval (in seconds) before the estimated expiration of an old distributed GTEK. In other words, the M&B TEK Grace Time is longer than the TEK Grace Time managed in an SS.

A BS distributes updated GTEK by using two PKMv2 Group-Key-Update-Command messages when the current GKEK is about to expire, or by using PKMv2 Group-Key-Update-Command message for the GTEK update mode after the M&B TEK Grace Time starts and before the current GTEK expires. Those messages are distinguished according to a parameter included in that message, "Key Push Modes."

A BS transmits the PKMv2 Group-Key-Update-Command message for the GKEK update mode to each SS served with the specific service before the current GKEK expires and the last M&B TEK Grace Time of the corresponding current GKEK starts. The PKMv2 Group-Key-Update-Command message for the GKEK update mode is carried on the primary management connection. A BS intermittently transmits the PKMv2 Group-Key-Update-Command message for the GKEK update mode to each SS in order to reduce the BS's load for key refreshment. The purpose of the first PKMv2 Group-Key-Update-Command message for the GKEK update mode is to distribute the GKEK (Group Key Encryption Key). This GKEK is needed to encrypt the updated GTEK. The GKEK is also encrypted with the SS's KEK. The GKEK may be randomly generated in a BS or a network entity (i.e., an ASA server or an MBS server).

A BS transmits the PKMv2 Group Key Update Command message for the GTEK update mode carried on the broadcast connection after the M&B TEK Grace Time. The aim of the PKMv2 Group-Key-Update-Command message for the GTEK update mode is to distribute the GTEK to the specific service group. This GTEK is encrypted with the GKEK identified by the associated GKEK sequence number. The associated GKEK sequence number is included in the GTEK-Parameters attribute.

7.9.1.2 SS usage of GTEK

An SS shall be also capable of maintaining two successive sets of traffic keying material per authorized GSAID. Through operation of its GTEK state machines, an SS shall check whether it receives new traffic keying material or not. If an SS get new traffic keying material, then its TEK Grace Time is not operated. However, if it does not have that, then an SS shall request a new set of traffic keying material at a configurable amount of time, the TEK Grace Time, before the SS's latest GTEK is scheduled to expire.

7.9.2 Messages

Messages used in the MBRA are the PKMv2 Key Request, PKMv2 Key Reply and PKMv2 Group-Key-Update-Command messages.

— *PKMv2 Key-Request.* An SS may request the traffic keying material with the PKMv2 Key Request message in the initial GTEK request exchange procedure or the GTEK refresh procedure. Refer to 6.3.2.3.9.20.

— *PKMv2 Key-Reply.* A BS responds to the PKMv2 Key-Reply message with the Key Reply message including the traffic keying material. The PKMv2 Key-Reply message includes GKEK as well as GTEK. The GTEK is the TEK for the multicast or broadcast service. GKEK and GTEK are encrypted to safely distribute to an SS. GTEK is encrypted with the GKEK for the multicast service or the broadcast service. The GKEK is encrypted with the KEK. See 7.5.4.5.2 and 7.9.3 for details. This message is carried on the primary management connection. Refer to 6.3.2.3.9.21.
— *PKMv2 Group-Key-Update-Command.* A BS transmits a PKMv2 Group-Key-Update-Command message to initiate and push newly updated GKEK and GTEK to every SSs served with the specific multicast or broadcast service.

7.9.3 Encryption of GKEK

The BS encrypts the value fields of the GKEK in the Key Update Command message for the GKEK update mode and sends the encrypted GKEK to each SS served with the specific multicast service or the broadcast service. This field is encrypted using several algorithms. See 7.5.4.5.2 for details.

7.9.4 Message authentication keys for the Key Update Command message

One of the HMAC-Digest attribute or the CMAC Digest attribute is used for Key Update Command message authentication.

Input key used to generate HMAC authentication keys of Key Update Command message is different according to the value field of the Key Push Modes. The AK shall be used for generation of HMAC-Digest included in the Key Update Command message for the GKEK update mode and the GKEK shall be used for generation of HMAC-Digest included in the Key Update Command message for the GTEK update mode. See 7.2.2.2.9 for details. The CMAC_KEY_GD and HMAC_KEY_GD should be recomputed when a new GKEK is used.

8. Physical layer (PHY)

8.1 WirelessMAN-SC PHY specification

8.1.1 Overview

This PHY specification, targeted for operation in the 10–66 GHz frequency band, is designed with a high degree of flexibility in order to allow service providers the ability to optimize system deployments with respect to cell planning, cost, radio capabilities, services, and capacity.

In order to allow for flexible spectrum usage, both TDD and FDD configurations (8.1.3) are supported. Both cases use a burst transmission format whose framing mechanism (8.1.4.1) supports adaptive burst profiling in which transmission parameters, including the modulation and coding schemes, may be adjusted individually to each SS on a frame-by-frame basis. The FDD case supports full-duplex SSs as well as half-duplex SSs, which do not transmit and receive simultaneously.

The UL PHY is based on a combination of TDMA and DAMA. In particular, the UL channel is divided into a number of time slots. The number of slots assigned for various uses (registration, contention, guard, or user traffic) is controlled by the MAC in the BS and may vary over time for optimal performance. The DL channel is TDM, with the information for each SS multiplexed onto a single stream of data and received by all SSs within the same sector. To support half-duplex FDD SSs, provision is also made for a TDMA portion of the DL.

The DL PHY includes a TCS that inserts a pointer byte at the beginning of the payload to help the receiver identify the beginning of a MAC PDU. Data bits coming from the TCS are randomized, FEC encoded, and mapped to a QPSK, 16 quadrature amplitude modulation (QAM), or 64-QAM (optional) signal constellation.

The UL PHY is based upon TDMA burst transmission. Each burst is designed to carry variable-length MAC PDUs. The transmitter randomizes the incoming data, FEC encodes it, and maps the coded bits to a QPSK, 16-QAM (optional), or 64-QAM (optional) constellation.

8.1.2 Framing

This PHY specification operates in a framed format (6.3.7). Within each frame are a DL subframe and an UL subframe. The DL subframe begins with information necessary for frame synchronization and control. In the TDD case, the DL subframe comes first, followed by the UL subframe. In the FDD case, UL transmissions occur concurrently with the DL frame.

Each SS shall attempt to receive all portions of the DL except for those bursts whose burst profile is either not implemented by the SS or is less robust than the SS's current operational DL burst profile. Half-duplex SSs shall not attempt to listen to portions of the DL coincident with their allocated UL transmission, if any, adjusted by their Tx time advance.

8.1.2.1 Supported frame durations

Table 211 indicates the supported frame durations.

Table 211—Frame durations and frame duration codes

Frame duration code (4 bits)	Frame duration (T_f)	Units
0x01	0.5	ms
0x02	1	ms
0x03	2	ms
0x04–0x0F	*Reserved*	

8.1.3 Duplexing techniques and PHY Type parameter encodings

Both FDD and TDD are supported. The duplexing method shall be reflected in the PHY Type parameter (11.4.1) as shown in Table 212.

Table 212—PHY Type parameter encoding

PHY Type	Value
TDD	0
FDD	1

8.1.3.1 FDD operation

In FDD operation, the UL and DL channels are on separate frequencies. The capability of the DL to be transmitted in bursts facilitates the use of different modulation types and allows the system to simultaneously support full-duplex SSs (which can transmit and receive simultaneously) and half-duplex SSs (which do not). Note that the DL carrier may be continuous, as demonstrated in Figure 177 (third frame). Figure 177 describes the basics of the FDD operation.

In the case of a half-duplex SS, transition gaps, as described in 8.1.3.2.1 and 8.1.3.2.2, apply.

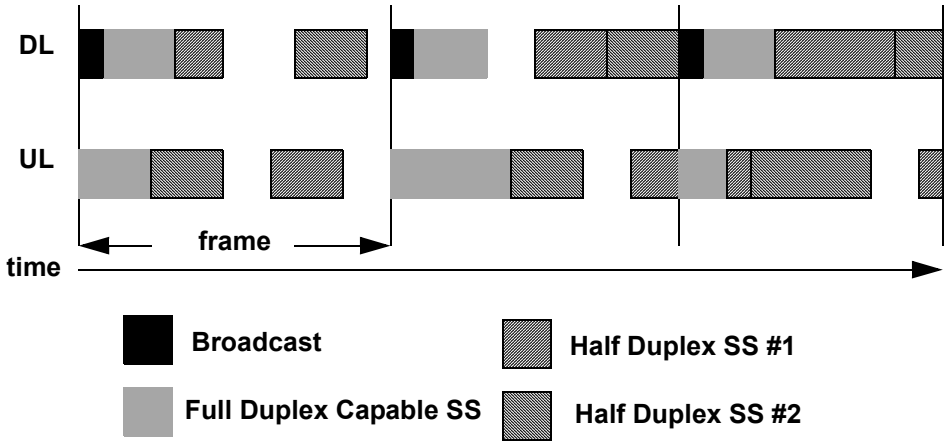

Figure 177—Example of FDD bandwidth allocation

8.1.3.2 TDD operation

In the case of TDD, the UL and DL transmissions share the same frequency but are separated in time, as shown in Figure 178. A TDD frame also has a fixed duration and contains one DL and one UL subframe. The TDD framing is adaptive in that the link capacity allocated to the DL versus the UL may vary.

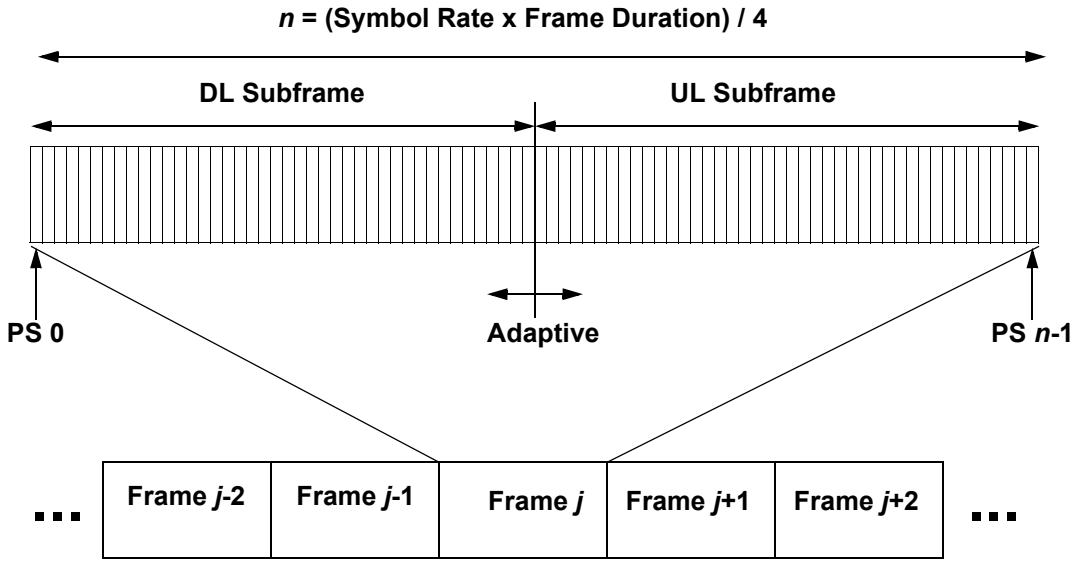

Figure 178—TDD frame structure

8.1.3.2.1 TTG

The TTG is a gap between the DL burst and the subsequent UL burst. This gap allows time for the BS to switch from Tx to Rx mode. During this gap, the BS is not transmitting modulated data but simply allowing the BS transmitter carrier to ramp down, the Tx/Rx antenna switch to actuate, and the BS receiver section to

activate. After the gap, the BS receiver shall look for the first symbols of UL burst. This gap is an integer number of PS durations and starts on a PS boundary.

8.1.3.2.2 RTG

The RTG is a gap between the UL burst and the subsequent DL burst. This gap allows time for the BS to switch from Rx to Tx mode. During this gap, the BS is not transmitting modulated data but simply allowing the BS transmitter carrier to ramp up and the Tx/Rx antenna switch to actuate. After the gap, the SS receivers shall look for the first symbols of QPSK modulated data in the DL burst. This gap is an integer number of PS durations and starts on a PS boundary.

8.1.4 DL PHY

The available bandwidth in the DL direction is defined with a granularity of one PS. The available bandwidth in the UL direction is defined with a granularity of one minislot, where the minislot length is 2^m PSs (m ranges from 0 through 7). The number of PSs with each frame is a function of the symbol rate. The symbol rate is selected in order to obtain an integral number of PSs within each frame. For example, with a 20 MBd symbol rate, there are 5000 PSs within a 1 ms frame.

8.1.4.1 DL subframe

The structure of the DL subframe using TDD is illustrated in Figure 179. The DL subframe begins with a Frame Start Preamble used by the PHY for synchronization and equalization. This is followed by the frame control section, containing DL-MAP and UL-MAP stating the PSs at which bursts begin. The following TDM portion carries the data, organized into bursts with different burst profiles and therefore different level of transmission robustness. The bursts are transmitted in order of decreasing robustness. For example, with the use of a single FEC type with fixed parameters, data begins with QPSK modulation, followed by 16-QAM, followed by 64-QAM. In the case of TDD, a TTG separates the DL subframe from the UL subframe.

Each SS receives and decodes the control information of the DL and looks for MAC headers indicating data for that SS in the remainder of the DL subframe.

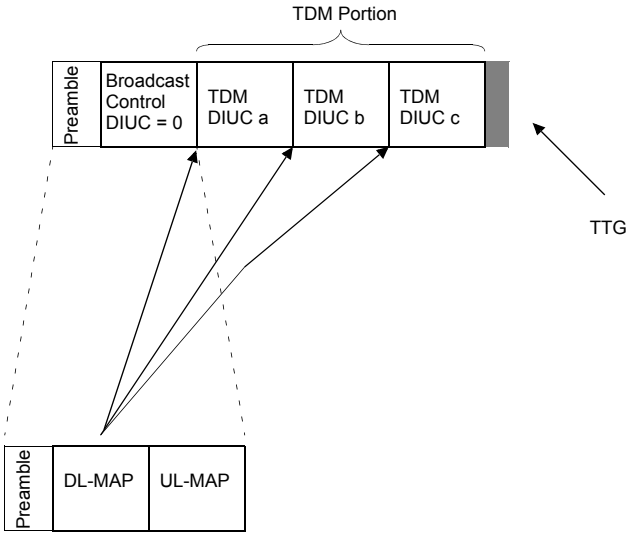

Figure 179—TDD DL subframe structure

In the FDD case, the structure of the DL subframe is illustrated in Figure 180. Like the TDD case, the DL subframe begins with a Frame Start Preamble followed by a frame control section and a TDM portion organized into bursts transmitted in decreasing order of burst profile robustness. This TDM portion of the DL subframe contains data transmitted to one or more of the following:

— Full-duplex SSs
— Half-duplex SSs scheduled to transmit later in the frame than they receive
— Half-duplex SSs not scheduled to transmit in this frame

The FDD DL subframe continues with a TDMA portion used to transmit data to any half-duplex SSs scheduled to transmit earlier in the frame than they receive. This allows an individual SS to decode a specific portion of the DL without the need to decode the entire DL subframe. In the TDMA portion, each burst begins with the DL TDMA Burst Preamble for phase resynchronization. Bursts in the TDMA portion need not be ordered by burst profile robustness. The FDD frame control section includes a map of both the TDM and TDMA bursts.

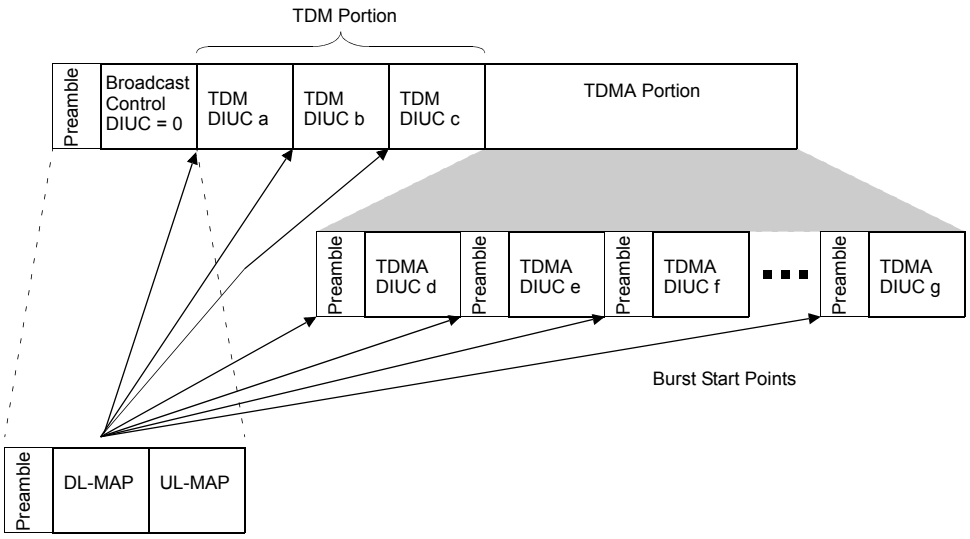

Figure 180—FDD DL subframe structure

The TDD DL subframe, which inherently contains data transmitted to SSs that transmit later in the frame than they receive, is identical in structure to the FDD DL subframe for a frame in which no half-duplex SSs are scheduled to transmit before they receive.

8.1.4.1.1 DL burst preambles

As shown in Table 213, two DL burst preambles are used. The frame start preamble shall begin each DL frame. The DL TDMA burst preamble shall begin each TDMA burst in the TDMA portion of the DL subframe.

Table 213—DL burst preambles

Preamble name	Burst profile	Preamble type	Modulation type
Frame start	TDM	1	QPSK
DL TDMA burst	TDMA	2	QPSK

Both preambles use QPSK modulation and are based upon +45 degrees rotated constant amplitude zero autocorrelation (CAZAC) sequences (Milewski [B39]). The amplitude of the preamble shall depend on the DL power adjustment rule (8.1.4.4.7). In the case of the constant peak power scheme (power adjustment rule = 0), the preamble shall be transmitted so that its constellation points coincide with the outermost constellation points of the modulation(s) scheme in the burst. In the case of the constant mean power scheme (power adjustment rule = 1), it shall be transmitted with the mean power of the constellation points of the modulation scheme(s) in the burst.

The frame start preamble (Table 214) consists of a 32-symbol sequence generated by repeating a 16-symbol CAZAC sequence. The DL TDMA burst preamble (Table 215) consists of a 16-symbol sequence generated by repeating an 8-symbol CAZAC sequence.

Table 214—Frame start preamble

Symbol	I	Q	B(1)	B(2)
1 and 17	1	1	0	0
2 and 18	1	1	0	0
3 and 19	–1	1	1	0
4 and 20	–1	–1	1	1
5 and 21	–1	1	1	0
6 and 22	1	–1	0	1
7 and 23	–1	1	1	0
8 and 24	1	1	0	0
9 and 25	–1	–1	1	1
10 and 26	–1	–1	1	1
11 and 27	–1	1	1	0
12 and 28	–1	–1	1	1
13 and 29	1	–1	0	1
14 and 30	–1	1	1	0
15 and 31	–1	1	1	0
16 and 32	1	1	0	0

8.1.4.1.2 Frame control section

The frame control section is the first portion of the DL frame following the preamble. It is used for control information destined for all SSs. This control information shall not be encrypted. The information transmitted in this section always uses the well-known DL burst profile with DIUC = 0.

The frame control section shall contain a DL-MAP message (6.3.2.3.2) for the channel followed by one UL-MAP message (6.3.2.3.4) for each associated UL channel. In addition, it may contain DCD and UCD messages (6.3.2.3.1 and 6.3.2.3.3) following the last UL-MAP message. No other messages shall be sent in the frame control section.

Table 215—DL TDMA burst preamble

Symbol	I	Q	B(1)	B(2)
1 and 9	–1	–1	1	1
2 and 10	–1	1	1	0
3 and 11	–1	–1	1	1
4 and 12	1	1	0	0
5 and 13	1	1	0	0
6 and 14	–1	1	1	0
7 and 15	1	1	0	0
8 and 16	1	1	0	0

8.1.4.1.2.1 DL-MAP elements

The IEs as defined in Table 216 follow the Number of DL-MAP Elements field of the DL-MAP message, as described in 6.3.2.3.2. The Map IEs shall be in chronological order. Note that this is not necessarily DIUC order (as DIUC numbering does not necessarily reflect robustness of the burst profile) or CID order.

Table 216—SC DL-MAP IE

Syntax	Size (bit)	Notes
DL-MAP_IE() {		
DIUC	4	
StartPS	16	The starting point of the burst, in units of PS where the first PS in a given frame has StartPS = 0
if (CID use enabled by burst profile) {		
CID	16	Unicast, multicast, or broadcast value
}		
}		

8.1.4.1.2.2 DL-MAP PHY synchronization field definition

The format of the PHY Synchronization Field of the DL-MAP message, as described in 6.3.2.3.2, is given in Table 217.

Network Configuration Type

Defines the network configuration type. If the network is DM then an FCH expected field is included. This is a 16-bit field that defines when the next frame preamble and FCH shall be transmitted. As this transmission will be directed to a given SS, it is effectively a private transmission to that SS.

Frame Duration Code
Defined in Table 211.

Frame Number
Incremented by 1 each frame and eventually wraps around to zero.

FCH expected
The FCH expected shall indicate the transmission of a DL-MAP, UL-MAP, DCD or UCD. For network entry of DM it is possible to increase the frequency of occurrence of FCH transmission to assist new nodes to enter the network. The frequency can be reduced for the case of steady state network operation.

Table 217—SC PHY synchronization field

Syntax	Size (bit)	Notes
PHY Synchronization Field() {	—	—
Network Configuration Type (NCT)	4	Flag to indicate network configuration type 0: PMP 1: DM 2: PtP 3–15: *Reserved*
Frame Duration Code	4	—
Frame Number	24	—
if (NCT == DM) {	—	—
FCH expected	16	The number of frames before the Frame Preamble and FCH will be transmitted again.
}	—	—
}	—	—

8.1.4.1.2.3 UL-MAP allocation start time definition

The allocation start time is the effective start time of the UL allocation defined by the UL-MAP in units of minislots. The start time is relative to the start of the frame in which the UL-MAP message is transmitted.

8.1.4.1.2.4 Required DCD parameters

The following parameters shall be included in the DCD message:

— BS Tx Power

NOTE—To be used by SSs to validate radio link conditions.

— PHY type
— FDD/TDD frame duration

8.1.4.1.2.5 Downlink_Burst_Profile

Each Downlink_Burst_Profile in the DCD message (6.3.2.3.1) shall include the following parameters:

— Modulation type

— FEC Code Type
— Last codeword length
— Preamble Presence

If the FEC Code Type is 1, 2, or 3 (RS codes), the Downlink_Burst_Profile shall also include the following:

— RS information bytes (*K*)
— RS parity bytes (*R*)

If the FEC Code Type is 2, the Downlink_Burst_Profile shall also include the following:

— BCC code type

If the FEC Code Type is 4, the Downlink_Burst_Profile shall also include the following:

— Block Turbo Code (BTC) row code type
— BTC column code type
— BTC interleaving type

The mapping between Burst Profile and DIUC is given in Table 218.

Table 218—Mapping of burst profile to DIUC

Burst profile	DIUC
Downlink Burst Profile 1	0
Downlink Burst Profile 2	1
Downlink Burst Profile 3	2
Downlink Burst Profile 4	3
Downlink Burst Profile 5	4
Downlink Burst Profile 6	5
Downlink Burst Profile 7	6
Downlink Burst Profile 8	7
Downlink Burst Profile 9	8
Downlink Burst Profile 10	9
Downlink Burst Profile 11	10
Downlink Burst Profile 12	11
Downlink Burst Profile 13	12
Reserved	13
Gap	14
End of DL-MAP	15

The Downlink Burst Profile 1 (DIUC = 0) parameters defined in 8.1.4.4.5 shall be stored in the SS and shall not be included in the DCD message.

The Gap Downlink Burst Profile (DIUC = 14) indicates a silent interval in DL transmission. It is well-known and shall not be defined in the DCD message.

The End of DL-MAP Burst Profile (DIUC = 15) indicates the first PS after the end of the DL subframe. It is well known and shall not be included in the DCD message.

Table 219 defines the format of the Downlink_Burst_Profile, which is used in the DCD message (6.3.2.3.1). The Downlink_Burst_Profile is encoded with a Type of 1, an 8-bit length, and a 4-bit DIUC. The DIUC field is associated with the DL burst profile and thresholds. The DIUC value is used in the DL-MAP message to specify the Burst Profile to be used for a specific DL burst.

Table 219—SC Downlink_Burst_Profile format

Syntax	Size (bit)	Notes
Type = 1	8	
Length	*variable*	
Reserved	4	Shall be set to zero
DIUC	4	
TLV encoded information	*variable*	TLV-specific

8.1.4.2 DL burst allocation

The DL data sections are used for transmitting data and control messages to the specific SSs. The data are always FEC coded and are transmitted at the current operating modulation of the individual SS. In the TDM portion, data shall be transmitted in order of decreasing burst profile robustness. In the case of a TDMA portion, the data are grouped into separately delineated bursts that need not be in robustness order (see 8.1.4.1). The DL-MAP message contains a map stating at which PS the burst profile changes occur. In the case of TDMA, if the DL data does not fill the entire DL subframe, the transmitter is shut down. FEC codewords within a burst are arranged in a compact form aligned to bit-level boundaries. This implies that, while the first FEC codeword shall start on the first PS boundary, succeeding FEC codewords may start even within a modulation symbol or within a PS if the succeeding FEC codeword ended within a modulation symbol or within a PS. The exact alignment conditions depend on the burst profile parameters.

In the case of shortening the last FEC block within a burst (optional, see 11.4.2), the DL-MAP provides an implicit indication.

In general, the number of PSs i (which shall be an integer) allocated to a particular burst can be calculated from the DL-MAP, which indicates the starting position of each burst as well as the burst profiles. Let n denote the minimum number of PSs required for one FEC codeword of the given burst profile (note that n is not necessarily an integer). Then, $i = kn + j + q$, where k is the number of whole FEC codewords that fit in the burst, j (not necessarily an integer) is the number of PSs occupied by the largest possible shortened codeword, and q ($0 \le q < 1$) is the number of PSs occupied by pad bits inserted at the end of the burst to guarantee that i is an integer. In Fixed Codeword Operation (8.1.4.4.4.1), j is always 0. Recall that a codeword can end partway through a modulation symbol as well as partway through a PS. When this occurs, the next codeword shall start immediately, with no pad bits inserted. At the end of the burst (i.e., when there is no next codeword), then $4q$ symbols are added as padding (if required) to complete the PS allocated in the

DL-MAP. The number of padding bits in these padding symbols is $4q$ times the modulation density, where the modulation density is 2 for QPSK, 4 for 16-QAM, and 6 for 64-QAM. Note that padding bits may be required with or without shortening. Either k or j, but not both, may be zero. The number j implies some number of bits b. Assuming j is nonzero, it shall be large enough so that b is larger than the number of FEC bits, r, added by the FEC scheme for the burst. The number of bits (preferably an integral number of bytes) available for user data in the shortened FEC codeword is $b–r$. Any bits that may be left over from a fractional byte are encoded as binary 1 to ensure compatibility with the choice of 0xFF for pad. A codeword cannot have less than six information bytes. This is illustrated in Figure 181.

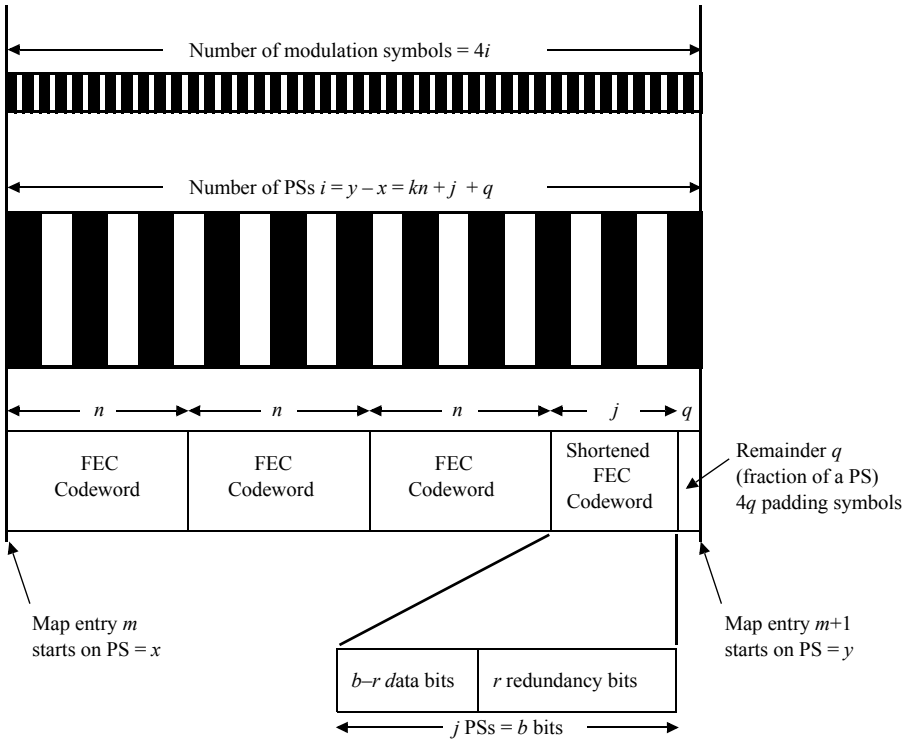

Figure 181—DL-MAP usage with shortened FEC blocks—TDM case

In the case of TDMA DL, a burst includes the DL TDMA burst preamble of length p PSs, and the DL-MAP entry points to its beginning (Figure 182).

8.1.4.3 DL TCS

The DL payload shall be segmented into blocks of data designed to fit into the proper codeword size after the CS pointer byte is added. Note that the payload length may vary, depending on whether shortening of codewords is allowed for this burst profile. A pointer byte shall be added to each payload segment, as illustrated in Figure 183.

The pointer field identifies the byte number in the packet, which indicates either the beginning of the first MAC PDU to start in the packet or the beginning of any stuff bytes that precede the next MAC PDU. For reference, the first byte in the packet is referred to as byte number 1. If no MAC PDU or stuff bytes begin in the CS packet, then the pointer byte is set to 0. When no data is available to transmit, a stuff_byte pattern having a value (0xFF) shall be used within the payload to fill any gaps between the IEEE 802.16 MAC PDUs. This value is chosen as an unused value for the first byte of the IEEE 802.16 MAC PDU, which is designed to never have this value.

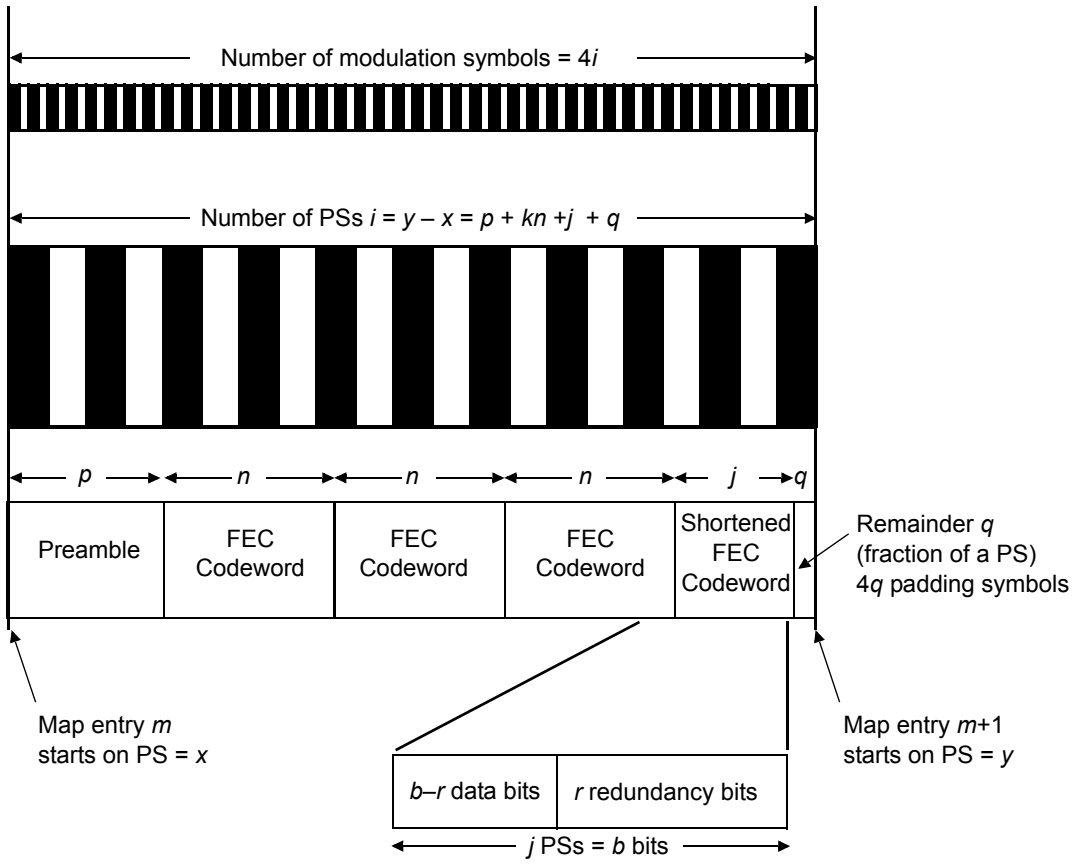

Figure 182—DL-MAP usage with shortened FEC blocks—TDMA case

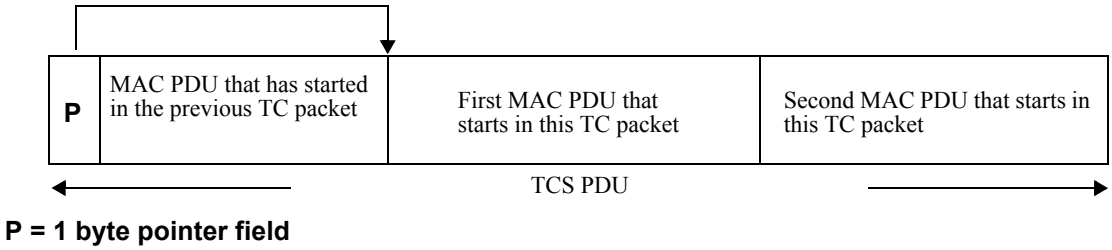

Figure 183—Format of the DL TCS PDU

8.1.4.4 DL PMD sublayer

The DL PHY coding and modulation for this mode is summarized in the block diagram in Figure 184.

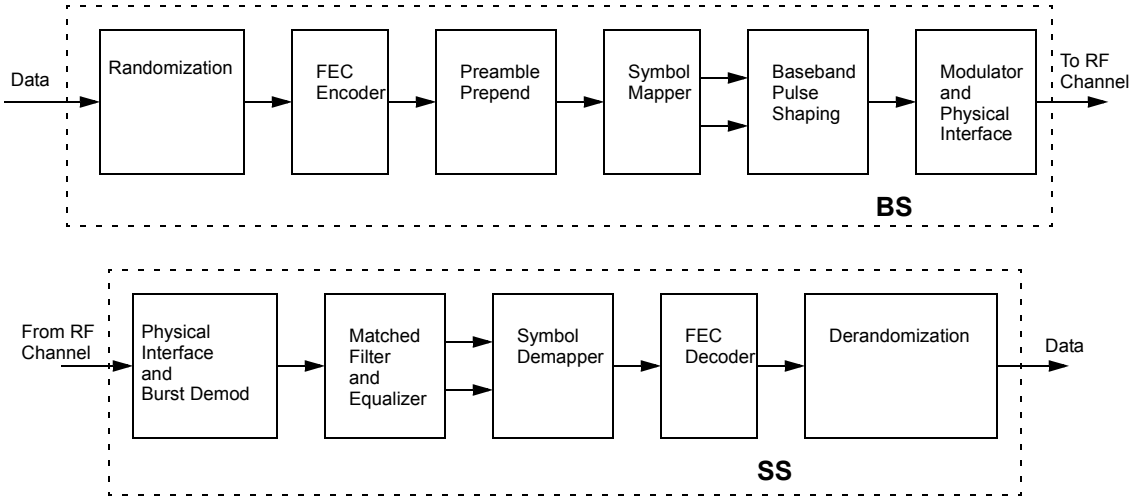

Figure 184—Conceptual block diagram of the DL PMD sublayer

8.1.4.4.1 Burst profile definitions

The DL channel supports adaptive burst profiling on the user data portion of the frame. Up to twelve burst profiles can be defined. The parameters of each are communicated to the SSs via MAC messages during the frame control section of the DL frame (see 8.1.4.1). The DL channel and burst profiles are communicated to the SSs via the MAC messages described in 6.3.2.3.1.

The use of DIUCs shall be constrained as shown in Table 220.

Table 220—SC DIUC allocation

DIUC	Usage
0	Frame control (well known, not in DCD message)
1–6	TDM Burst Profiles (no preamble)
7–12	TDMA Burst Profiles (preamble prefixed)
13	*Reserved*
14	Gap (well known, not in DCD message)
15	End of map

8.1.4.4.2 DL PHY SS capability set parameters

Since there are optional modulation and FEC schemes that can be implemented at the SS, a method for identifying the capability to the BS is required (i.e., including the highest order modulation supported, the optional FEC coding schemes supported, and the minimum shortened last codeword length supported). This information shall be communicated to the BS during the subscriber registration period.

8.1.4.4.3 Randomization

Randomization shall be employed to minimize the possibility of transmission of an unmodulated carrier and to ensure adequate numbers of bit transitions to support clock recovery. The stream of DL packets shall be randomized by modulo-2 addition of the data with the output of the pseudo-random binary sequence (PRBS) generator, as illustrated in Figure 185. The generator polynomial for the PRBS shall be $c(x) = x^{15} + x^{14} + 1$.

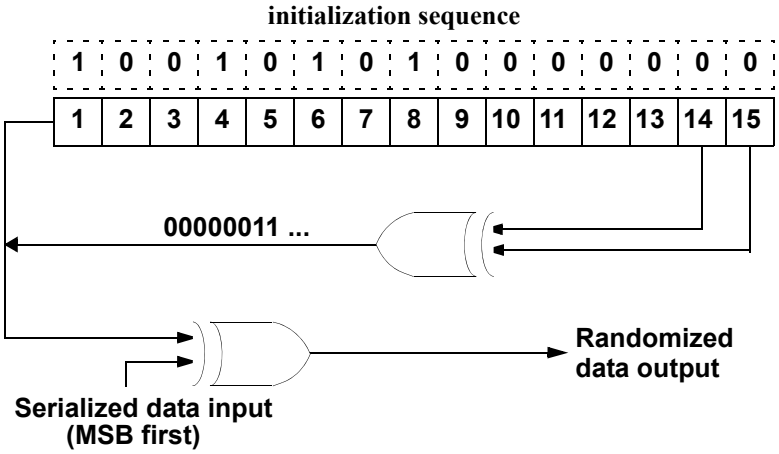

Figure 185—Randomizer logic diagram

At the beginning of each burst, the PRBS register is cleared and the seed value of 100101010000000 is loaded. A burst corresponds to either a TDM burst beginning with the frame start preamble or a TDMA burst beginning with a DL TDMA burst preamble (8.1.4.1.1). The seed value shall be used to calculate the randomization bits, which are combined in an XOR operation with the serialized bit stream of each burst. The randomizer sequence is applied only to information bits.

8.1.4.4.4 DL FEC

The FEC schemes are selectable from the types in Table 221.

Table 221—FEC Code Types

Code Type	Outer Code	Inner Code
1	Reed-Solomon over Galois field (GF) (256)	None
2	Reed-Solomon over GF(256)	(24,16) Block convolutional code
3 (Optional)	Reed-Solomon over GF(256)	(9,8) Parity check code
4 (Optional)	BTC	—

Implementation and use of Code Types 3 and 4 is optional. Code Types 1 and 2 shall be implemented by all BSs and SSs. Code Type 2 shall not be used except in the case of QPSK modulation. In the case of QPSK, any of the four Code Types may be used, with one exception: Code Type 2 shall always be used for the control channel (DIUC = 0).

The following is a summary of the four Code Types:

a) ***Code Type 1:*** *Reed-Solomon only:* This case is useful either for a large data block or when high coding rate is required. The protection could vary between $t = 0$ to $t = 16$.

b) ***Code Type 2:*** *Reed-Solomon + Block convolutional code (soft decodable):* This case is useful for low to moderate coding rates providing good carrier-to-noise ratio (C/N) enhancements. The coding rate of the inner block convolutional code (BCC) is 2/3. Note: The number of information bytes shall be even in this case.

c) ***Code Type 3:*** *Reed-Solomon + Parity check:* This optional code is useful for moderate to high coding rates with small to medium size blocks (i.e., $K = 16$, 53, or 128). The code itself is a simple bit wise parity check operating on byte (8 bit) level. The parity code can be used for error correction, preferably employing a soft decoder.

d) ***Code Type 4:*** *BTC:* This optional code is used to significantly lower the required carrier-to-interference ratio (C/I) level needed for reliable communication, and can be used to either extend the range of a BS or increase the code rate for greater throughput.

8.1.4.4.4.1 Outer code for Code Types 1–3, DL

The outer block code for Code Types 1–3 shall be a shortened, systematic Reed-Solomon code generated from GF(256) with information block length K variable from 6–255 bytes and error correction capability T able to correct from 0 to 16 byte errors. The specified code generator polynomials are given by the following:

Code Generator Polynomial: $g(x) = (x + \mu^0)(x + \mu^1)(x + \mu^2) \ldots (x + \mu^{2T-1})$, where $\mu = 02_{hex}$

Field Generator Polynomial: $p(x) = x^8 + x^4 + x^3 + x^2 + 1$

The specified code has a block length of 255 bytes and shall be configured as an RS(255,255-R) code with information bytes preceded by (255-N) zero symbols, where N is the codeword length and R the number of redundancy bytes ($R = 2 \times T$ ranges from 0 to 32, inclusive).

The value of K and T are specified for each burst profile by the MAC. Both Fixed Codeword Operation and Shortened Last Codeword Operation, as defined below, are allowed.

When using Code Type 2, the number of information bytes K shall always be an even number so that the total codeword size (K+R) is also an even number. This is due to the fact that the BCC code requires a pair of bytes on which to operate.

a) *Fixed Codeword Operation.* In Fixed Codeword Operation, the number of information bytes K is the same in each Reed-Solomon codeword. If the MAC messages in a burst require fewer bytes than are carried by an integral number of codewords, stuff bytes (FF_{hex}) shall be added between MAC messages or after the last MAC message so that the total message length is an integral multiple of K bytes.

   The SS determines the number of codewords in its DL burst from the DL-MAP message, which defines the beginning point of each burst, and hence the length. The BS determines the number of codewords in the DL as it scheduled this transmission event and is aware about its length. Using the burst length, both the SS and the BS calculate the number of full-length RS codewords that can be carried by each burst.

   The process used by the BS to encode each burst is described below:

   When the number of randomized MAC message bytes (M) entering the FEC process is less than K bytes, Operation A shall be performed:

A1) Add (*K-M*) stuff bytes (FF_{hex}) to the *M* byte block as a suffix.
A2) RS encode the *K* bytes and append the *R* parity bytes.
A3) Serialize the bytes and transmit them to the inner coder or the modulator MSB first.

When the number of randomized MAC message bytes (*M*) entering the FEC process is greater than or equal to *K* bytes, Operation B shall be performed:

B1) RS encode the first *K* bytes and append the *R* parity bytes.
B2) Subtract *K* from *M* (Let *M* = *M* – *K*).
B3) If the new *M* is greater than or equal to *K,* then repeat with the next set of bytes (go to B1).
B4) If the new *M* is zero, then stop; otherwise go to step A1 above and process the *M* < *K* case.

b) *Shortened Last Codeword Operation.* In the Shortened Last Codeword Operation, the number of information bytes in the final Reed-Solomon block of each burst is reduced from the normal number *K*, while the number of parity bytes *R* remains the same. The BS tailors the number of information bytes in the last codeword in order to minimize the number of stuff bytes to add to the end of the MAC message. The length of the burst is then set to the minimum number of PSs required to transport all of the burst's bytes, which include preamble, information, and parity bytes. The BS implicitly communicates the number of bytes in the shortened last codeword to the SS via the DL-MAP message, which defines the starting PS of each burst. The SS uses the DL-MAP information to calculate the number of full-length RS codewords and the length of the shortened last codeword that can be carried within the specified burst size. The BS performs a similar calculation as the SS for its encoding purposes.

To allow the receiving hardware to decode the previous Reed-Solomon codeword, no Reed-Solomon codeword shall have less than 6 information bytes. The number of information bytes carried by the shortened last codeword shall be between 6 and *K* bytes, inclusive. If the number of information bytes needing to be sent by the BS is less than 6 bytes of data, stuff bytes (FF_{hex}) shall be appended to the end of the data to bring the total number of information bytes up to the minimum of 6.

When using Code Type 2, the number of information bytes in the shortened last codeword shall always be an even number so that the total codeword size is also an even number. If an odd number of information bytes needs to be sent, a stuff byte (FF_{hex}) shall be appended to the end of the message to obtain an even number of bytes.

The process used by the BS to encode each burst is described below:

First, the full-sized Reed-Solomon codewords that precede the burst's final codeword are encoded as in the fixed codeword mode above. The number of bytes allocated for the shortened last codeword by the UL-MAP is *k´* bytes, which shall be between 6 and *K* bytes. The remaining *M* bytes of the message are then encoded into these *k´* bytes using the following procedure:

A1) Add (*K-k´*) zero bytes to the *M* byte block as a prefix.
A2) RS encode the *K* bytes and append the *R* parity bytes.
A3) Discard all of the (*K-k´*) zero RS symbols.
A4) Serialize the bytes and transmit them to the inner coder or the modulator MSB first.
A5) Perform the inner coding operation (if applicable).

8.1.4.4.4.2 Inner code for Code Type 2, DL

The inner code in Code Type 2 consists of short block codes derived from a 4-state, nonsystematic, punctured convolutional code (7,5). The trellis shall use the tail-biting method, where the last 2 bits of the message block are used to initialize the encoder memory, in order to avoid the overhead required for trellis termination. Thus, the encoder has the same initial and ending state for a message block.

For this concatenated coding scheme, the inner code message block is selected to be 16 bits. The puncturing pattern is described in Table 222 for the (24,16) case.

Table 222—Parameters of the inner codes for the BCC

Inner code rate	Puncture pattern G1 = 7, G2 = 5
2/3	11, 10

Figure 186 describes the exact encoding parity equations.

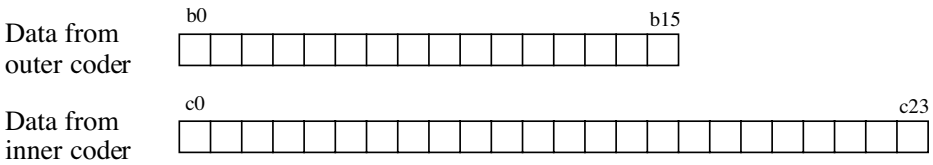

c23=b15 ⊕ b0 ⊕ b1
c22=b15 ⊕ b1
c21=b14 ⊕ b15 ⊕ b0
c20=b13 ⊕ b14 ⊕ b15
c19=b13 ⊕ b15
c18=b12 ⊕ b13 ⊕ b14
c17=b11 ⊕ b12 ⊕ b13
c16=b11 ⊕ b13
c15=b10 ⊕ b11 ⊕ b12
c14=b9 ⊕ b10 ⊕ b11
c13=b9 ⊕ b11
c12=b8 ⊕ b9 ⊕ b10

c11=b7 ⊕ b8 ⊕ b9
c10=b7 ⊕ b9
c9=b6 ⊕ b7 ⊕ b8
c8=b5 ⊕ b6 ⊕ b7
c7=b5 ⊕ b7
c6=b4 ⊕ b5 ⊕ b6
c5=b3 ⊕ b4 ⊕ b5
c4=b3 ⊕ b5
c3=b2 ⊕ b3 ⊕ b4
c2=b1 ⊕ b2 ⊕ b3
c1=b1 ⊕ b3
c0=b0 ⊕ b1 ⊕ b2

- 16 bits of data enter the inner BCC coder, b15 (MSB) first.
- 24 bits of data exit the inner coder, c23 (MSB) first.
- "⊕" represents "XOR"

Figure 186—Inner code for Code Type 2 in the DL

The number of information bytes shall be even since the BCC code operates on byte pairs.

8.1.4.4.4.3 Inner code for Code Type 3, DL

For Code Type 3, a parity check bit is added to each Reed-Solomon (RS) symbol individually and inserted as the LSB of the resulting 9-bit word. The parity is an XOR operation on all 8 bits within the symbol.

8.1.4.4.4.4 Code Type 4, DL

Code Type 4, the BTC, is a turbo-decoded product code (TPC). The idea of this coding scheme is to use extended Hamming block codes in a two-dimensional matrix. The two-dimensional code block is depicted in Figure 187. The k_x information bits in the rows are encoded into n_x bits, by using an extended Hamming binary block (n_x,k_x) code. Likewise, k_y information bits in the columns are encoded into n_y bits, by using the same or possibly different extended Hamming binary block (n_y,k_y) code. The resultant code block is composed of multiple rows and columns of the constituent extended Hamming block codes.

For this standard, the rows shall be encoded first. After encoding the rows, the columns are encoded using another block code (n_y,k_y), where the check bits of the first code are also encoded. The overall block size of such a product code is $n = n_x \times n_y$; the total number of information bits $k_x \times k_y$; and the code rate is $R = R_x \times R_y$, where $R_i = k_i/n_i$ and $i = x$ or y.

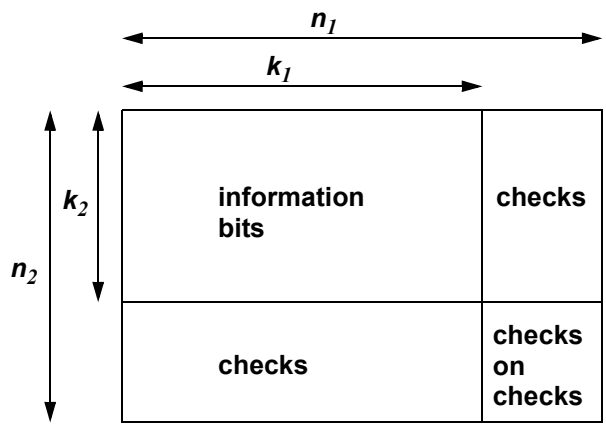

Figure 187—Two-dimensional product code matrix

Table 223 provides the generator polynomials of the constituent Hamming codes used in this specification.

Table 223—SC Hamming code generator polynomials

n	*k*	Generator polynomial
31	26	$x^5 + x^2 + 1$
63	57	$x^6 + x + 1$

The composite extended Hamming code specified requires addition of an overall even parity check bit at the end of each codeword.

The encoder for a BTC is composed of linear feedback shift registers (LFSRs), storage elements, and control logic. An example row (or column) encoder is shown here for clarification. The order of transmission is important so that the decoder may match for proper decoding. This specification mandates that the resultant code block be transmitted row by row, left to right, top to bottom, for the case when no interleaving is used (Interleaver Type 1 described below).

Figure 188 shows a sample LFSR based on a $x^4 + x + 1$ Hamming code polynomial to encode a (15,11) Hamming code. Also shown is an even parity computation register that results in an extended Hamming code. Note that encoders for the required (64,57) and (32,26) codes follow the same design concept. This figure is shown for clarification of the BTC encoder design and does not depict an actual design implementation.

The example circuit begins with all toggle switches in position A. Data to be encoded is fed as input 1 bit per clock (LSB first) to both the Hamming error correction code (ECC) computation logic and the overall even parity computation logic. Extended Hamming codes are systematic codes, so this data is also fed through as output on the encoded bit output. After all *k* bits are input, the toggle switches are moved to position B. At this point, data from the Hamming ECC logic is shifted out on the encoded bits bus. Finally, the overall parity bit is shifted out when the output select switch is moved to position C.

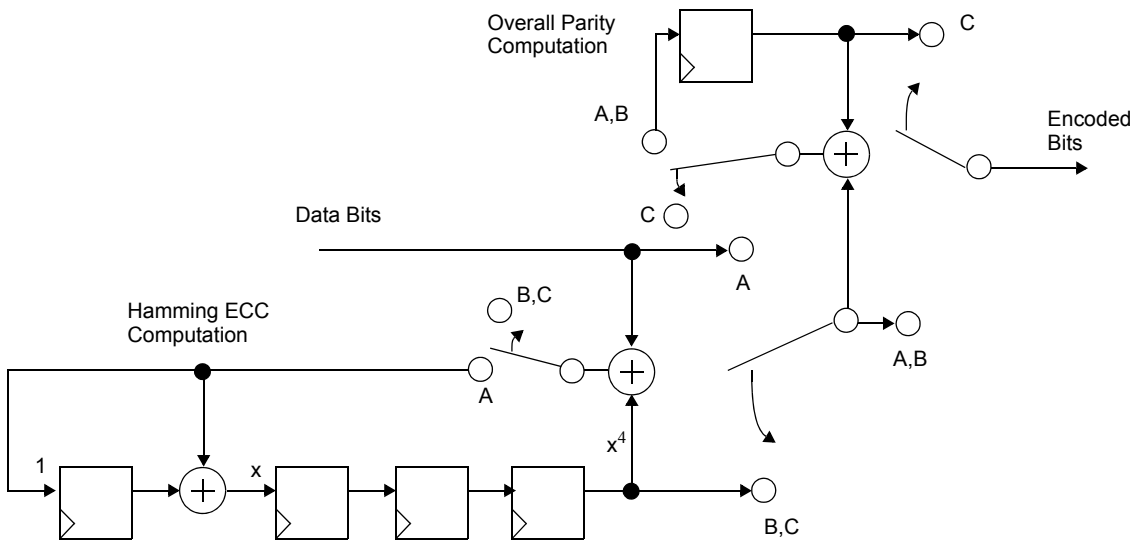

Figure 188—Example encoder for a (16,11) extended Hamming Code

In order to encode the product code, each data bit is fed as input both into a row LFSR and a column LFSR. Note that only one row LFSR is necessary for the entire block, since data is written as input in row order. However, each column of the array shall be encoded with a separate LFSR. Each column LFSR is clocked for only one bit of the row, so a more efficient method of column encoding is to store the column LFSR states in a $k_x \times (n_y - k_y)$ storage memory. A single LFSR can then be used for all columns of the array. With each bit input, the appropriate column LFSR state is read from the memory, clocked, and written back to the memory.

The encoding process is demonstrated here with an example. Assume a two-dimensional (8,4)×(8,4) extended Hamming product code is to be encoded. This block has 16 data bits, and 64 total encoded bits. Table 224 shows the original 16 data bits denoted by D_{yx}, where y corresponds to a column and x corresponds to a row.

Table 224—Original data for encoding

D_{11}	D_{21}	D_{31}	D_{41}
D_{12}	D_{22}	D_{32}	D_{42}
D_{13}	D_{23}	D_{33}	D_{43}
D_{14}	D_{24}	D_{34}	D_{44}

The first four bits of the array are fed into the row encoder input in the order D_{11}, D_{21}, D_{31}, D_{41}. Each bit is also fed as input into a unique column encoder. Again, a single column encoder may be used, with the state of each column stored in a memory. After the fourth bit is fed into the input, the first row encoder ECC bits are shifted out.

This process continues for all four rows of data. At this point, 32 bits have been taken as output from the encoder, and the four column encoders are ready to shift out the column ECC bits. This data is shifted out at the end of the row. This continues from the remaining three rows of the array. Table 225 shows the final encoded block with the 48 generated ECC bits denoted by E_{yx}.

Table 225—Encoded block

D_{11}	D_{21}	D_{31}	D_{41}	E_{51}	E_{61}	E_{71}	E_{81}
D_{12}	D_{22}	D_{32}	D_{42}	E_{52}	E_{62}	E_{72}	E_{82}
D_{13}	D_{23}	D_{33}	D_{43}	E_{53}	E_{63}	E_{73}	E_{83}
D_{14}	D_{24}	D_{34}	D_{44}	E_{54}	E_{64}	E_{74}	E_{84}
E_{15}	E_{25}	E_{35}	E_{45}	E_{55}	E_{65}	E_{75}	E_{85}
E_{16}	E_{26}	E_{36}	E_{46}	E_{56}	E_{66}	E_{76}	E_{86}
E_{17}	E_{27}	E_{37}	E_{47}	E_{57}	E_{67}	E_{77}	E_{87}
E_{18}	E_{28}	E_{38}	E_{48}	E_{58}	E_{68}	E_{78}	E_{88}

Transmission of the block over the channel occurs in a linear manner; all bits of the first row are transmitted left to right, followed by the second row, etc. This allows for the construction of a near zero-latency encoder, since the data bits can be sent immediately over the channel, with the ECC bits inserted as necessary. For the (8,4)×(8,4) example, the output order for the 64 encoded bits is D_{11}, D_{21}, D_{31}, D_{41}, E_{51}, E_{61}, E_{71}, E_{81}, D_{12}, D_{22}, … ,E_{88}.

For easier readability, the following notation is used:

— The codes defined for the rows (x-axis) are binary (n_x,k_x) block codes.
— The codes defined for the columns (y-axis) are binary (n_y,k_y) block codes.
— Data bits are noted D_{yx} and parity bits are noted E_{yx}.

a) *Shortened BTC:* To match packet sizes, removing symbols from the array shortens a product code. In general, rows or columns are removed until the appropriate size is reached. Codes selected shall have an integral number of information bytes. Different shortening approaches are applicable for BTC. In one method, rows and columns are deleted completely from an initial BTC array. For example, a 253 byte code is generated by starting with (64,57) constituent codes and deleting thirteen rows and eleven columns. Another method uses a more systematic two-dimensional shortening. For example, a 128 byte BTC code is composed of (64,57) constituent codes which are shortened by 25 rows and 25 columns, as described in Figure 189. The end result is a (39,32)×(39,32) array, which is capable of encoding 32 × 32 = 1024 bits (128 bytes) of data. Table 226 summarizes these example codes. A method for determining codes for payload sizes different than these examples is given at the end of this subclause.

Modifications to the encoder to support shortening are minimal. Since shortened bits are always zero, and zeros input to the encoder LFSR result in a zero state, the shortened bits can simply be ignored for the purpose of encoding. The encoder simply needs to know how many bits per row to input to the row LFSR before shifting out the result. Similarly, it must know the number of columns to input to the column encoders.

Transmission of the resultant code block shall start with the first data bit in the first row, proceed left to right, and then continue row by row from top to bottom.

Table 226—Required block codes for the BTC option for the DL channel

Code	(39,32)×(39,32)	(53,46)×(51,44)
Aggregate Code Rate	0.673	0.749

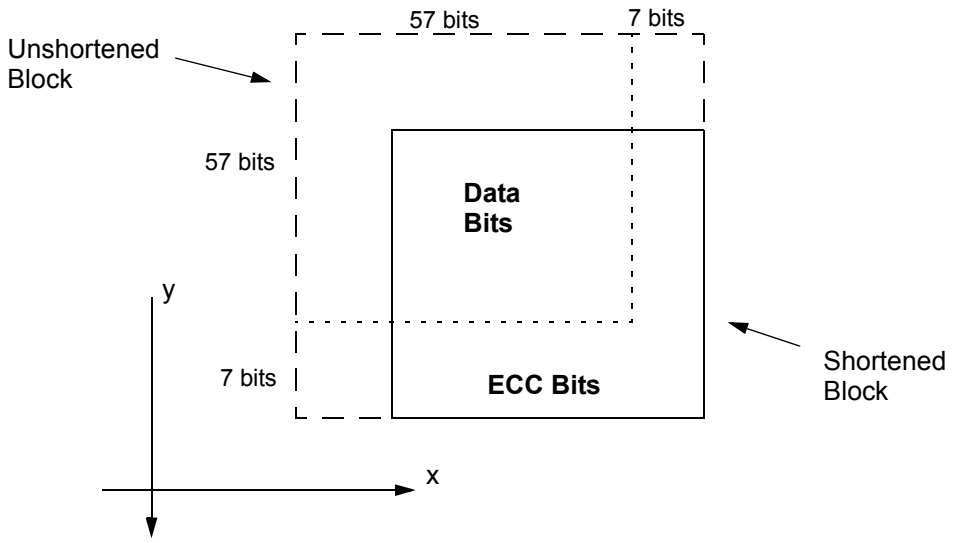

Figure 189—Structure of shortened 2 D block

Table 226—Required block codes for the BTC option for the DL channel

UL/DL/Both	DL	DL
Block size (payload bits)	1024 (128 bytes)	3136 (392 bytes)

b) *Interleaving:* When using the Block Turbo Coding, two modes of bit interleaving shall be supported. The interleaver mechanism shall be implemented by writing information bits into the encoder memory and reading out the encoded bits as follows:

1) *Interleaver type 1:* No interleaver. In this mode, the encoded bits are read from the encoder row by row, in the order that they were written.

2) *Interleaver type 2:* Block interleaver. In this mode, the encoded bits are read from the encoder after the first k_2 rows (Figure 187) are written into the encoder memory. The bits are read column by column, proceeding from the top position in the first column.

3) *Interleaver type 3: Reserved*. It is expected that other interleaving methods may yield better performance in some cases. So, this Interleaver type 3 has been reserved for future definition.

c) *Block mapping to the signal constellation:* The first encoded bit out shall be the LSB, which is the first bit written into the encoder.

d) *Method for determining codes for payload size different than the listed examples:* The following text describes a method for performing additional codeword shortening when the input block of data does not match exactly the codeword information size.

1) Take the required payload as specified in bytes and convert it to bits (i.e., multiply by 8).

2) Take the square root of the resultant number.

3) Round the result up to the next highest integer.

4) Select the smallest base constituent code from the available list that has a k value equal to or greater than the value determined in step 3).

5) Subtract the value determined in step 3) from the k value selected in step 4). This value represents the number of rows and columns that need to be shortened from the base constituent code selected in step 4).

This method will generally result in a code block whose payload is slightly larger than required in step 1 above. In order to address the residual bits, the column dimension (n_y,k_y) should be shortened as needed and, as needed, zero bits may be stuffed into the last bits of the last row of the resulting code matrix. The zero bits in the last row should be discarded at the receiver.

Example: If a 20-byte payload code is desired, a (32,26)×(32,26) code is shortened by 13 rows and by 13 columns, resulting in a (19,13)×(19,13) code. There are 9 bits left over that are stuffed with zeros. Data input to the defined encoder is 160 data bits followed by 9 zero bits. The code block is transmitted starting with the bit in row 1 column 1 (the LSB), then left to right, and then row by row.

8.1.4.4.5 Definition of parameters for burst profile (DIUC = 0)

The burst profile with DIUC = 0 shall be configured with the parameters in Table 227.

Table 227—Parameters for burst profile (DIUC=0)

Parameter	Value	Comment
Modulation type	1	QPSK
FEC Code Type	2	RS + BCC
RS information bytes (*K*)	26	—
RS parity bytes (*R*)	20	—
BCC Code Type	1	(24,16)
Last codeword length	1	fixed

8.1.4.4.6 Coding of the control portion of the frame

The frame control section of the DL frame (as defined in 8.1.4.1) shall be encoded with a fixed set of parameters known to the SS at initialization in order to ensure that all SSs can read the information. The modulation shall be QPSK, and the data shall be encoded with an outer (46,26) Reed-Solomon code and an inner (24,16) convolutional code. There shall be a minimum of two codewords per control portion of the frame when a DL allocation map is present. When a UL-MAP is present, it shall be concatenated with the DL allocation map to increase efficiency. This operation mode shall be designated as TDM Burst Profile 1 (DIUC = 0). Stuff bytes (FF_{hex}) shall be appended as necessary to the end of the control messages to fill up the minimum number of codewords.

8.1.4.4.7 DL modulation

To maximize utilization of the airlink, the PHY uses a multilevel modulation scheme. The modulation constellation can be selected per subscriber based on the quality of the RF channel. If link conditions permit, then a more complex modulation scheme can be utilized to maximize airlink throughput while still allowing reliable data transfer. If the airlink degrades over time, possibly due to environmental factors, the system can revert to the less complex constellations to allow more reliable data transfer.

In the DL, the BS shall support QPSK and 16-QAM modulation and, optionally, 64-QAM.

The sequence of modulation bits shall be mapped onto a sequence of modulation symbols $S(k)$, where k is the corresponding symbol number. The number of bits per symbol depends on the modulation type. For QPSK, $n = 2$; for 16-QAM, $n = 4$; and for 64-QAM, $n = 6$. $B(m)$ denotes the modulation bit of a sequence to

be transmitted, where *m* is the bit number (*m* ranges from 1 through *n*). In particular, *B*(1) corresponds to the first bit entering the modulator, *B*(2) corresponds to the second bit entering the modulation, and so on.

In changing from one burst profile to another, the BS shall use one of two power adjustment rules: maintaining constant constellation peak power (power adjustment rule = 0), or maintaining constant constellation mean power (power adjustment rule = 1). In the constant peak power scheme, corner points are transmitted at equal power levels regardless of modulation type. In the constant mean power scheme, the signal is transmitted at equal mean power levels regardless of modulation type. The power adjustment rule is configurable through the DCD Channel Encoding parameters (11.4.1).

At the end of each burst, the final FEC-encoded message might not end exactly on a PS boundary. If this is the case, the end of the encoded message to the start of the next burst shall be filled with zero bits.

The complex modulation symbol *S(k)* shall take the value $I + jQ$. The following subclauses apply to the base-band part of the transmitter.

Figure 190 and Table 228 describe the bit mapping for QPSK modulation.

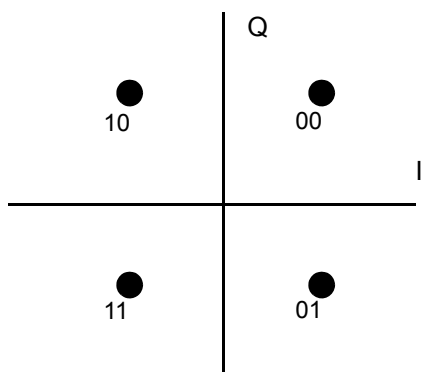

Figure 190—QPSK constellation

Table 228—QPSK bits to symbol mapping

B(1)	B(2)	I	Q
0	0	1	1
0	1	1	–1
1	0	–1	1
1	1	–1	–1

Figure 191 and Table 229 describe the bit mapping for 16-QAM modulation.

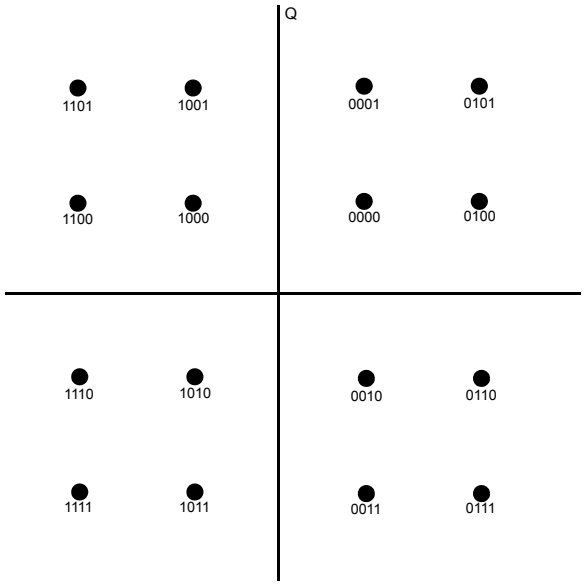

Figure 191—16-QAM constellation (gray-coded)

Table 229—16-QAM bits to symbol mapping

B(1)	B(2)	B(3)	B(4)	I	Q
0	1	0	1	3	3
0	1	0	0	3	1
0	1	1	0	3	–1
0	1	1	1	3	–3
0	0	0	1	1	3
0	0	0	0	1	1
0	0	1	0	1	–1
0	0	1	1	1	–3
1	0	0	1	–1	3
1	0	0	0	–1	1
1	0	1	0	–1	–1
1	0	1	1	–1	–3
1	1	0	1	–3	3
1	1	0	0	–3	1
1	1	1	0	–3	–1
1	1	1	1	–3	–3

Figure 192 and Table 230 describe the bit mapping for 64-QAM modulation.

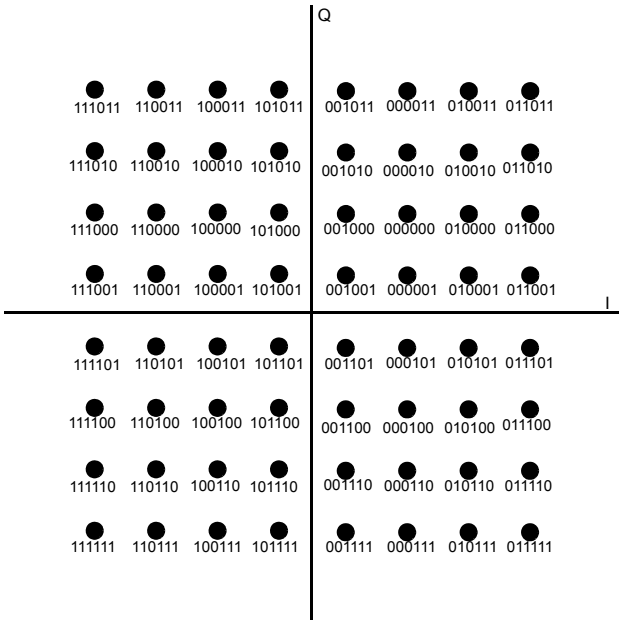

Figure 192—64-QAM constellation (gray-coded)

Table 230—64-QAM bits to symbol mapping

B(1)	B(2)	B(3)	B(4)	B(5)	B(6)	I	Q
0	1	1	0	1	1	7	7
0	1	1	0	1	0	7	5
0	1	1	0	0	0	7	3
0	1	1	0	0	1	7	1
0	1	1	1	0	1	7	–1
0	1	1	1	0	0	7	–3
0	1	1	1	1	0	7	–5
0	1	1	1	1	1	7	–7
0	1	0	0	1	1	5	7
0	1	0	0	1	0	5	5
0	1	0	0	0	0	5	3
0	1	0	0	0	1	5	1
0	1	0	1	0	1	5	–1
0	1	0	1	0	0	5	–3
0	1	0	1	1	0	5	–5
0	1	0	1	1	1	5	–7

Table 230—64-QAM bits to symbol mapping *(continued)*

B(1)	B(2)	B(3)	B(4)	B(5)	B(6)	I	Q
0	0	0	0	1	1	3	7
0	0	0	0	1	0	3	5
0	0	0	0	0	0	3	3
0	0	0	0	0	1	3	1
0	0	0	1	0	1	3	–1
0	0	0	1	0	0	3	–3
0	0	0	1	1	0	3	–5
0	0	0	1	1	1	3	–7
0	0	1	0	1	1	1	7
0	0	1	0	1	0	1	5
0	0	1	0	0	0	1	3
0	0	1	0	0	1	1	1
0	0	1	1	0	1	1	–1
0	0	1	1	0	0	1	–3
0	0	1	1	1	0	1	–5
0	0	1	1	1	1	1	–7
1	0	1	0	1	1	–1	7
1	0	1	0	1	0	–1	5
1	0	1	0	0	0	–1	3
1	0	1	0	0	1	–1	1
1	0	1	1	0	1	–1	–1
1	0	1	1	0	0	–1	–3
1	0	1	1	1	0	–1	–5
1	0	1	1	1	1	–1	–7
1	0	0	0	1	1	–3	7
1	0	0	0	1	0	–3	5
1	0	0	0	0	0	–3	3
1	0	0	0	0	1	–3	1
1	0	0	1	0	1	–3	–1
1	0	0	1	0	0	–3	–3
1	0	0	1	1	0	–3	–5
1	0	0	1	1	1	–3	–7
1	1	0	0	1	1	–5	7

Table 230—64-QAM bits to symbol mapping *(continued)*

B(1)	B(2)	B(3)	B(4)	B(5)	B(6)	I	Q
1	1	0	0	1	0	–5	5
1	1	0	0	0	0	–5	3
1	1	0	0	0	1	–5	1
1	1	0	1	0	1	–5	–1
1	1	0	1	0	0	–5	–3
1	1	0	1	1	0	–5	–5
1	1	0	1	1	1	–5	–7
1	1	1	0	1	1	–7	7
1	1	1	0	1	0	–7	5
1	1	1	0	0	0	–7	3
1	1	1	0	0	1	–7	1
1	1	1	1	0	1	–7	–1
1	1	1	1	0	0	–7	–3
1	1	1	1	1	0	–7	–5
1	1	1	1	1	1	–7	–7

8.1.4.4.8 Baseband pulse shaping

Prior to modulation, the I and Q signals shall be filtered by square-root raised cosine filters. The excess bandwidth factor α shall be 0.25. The ideal square-root raised cosine filter is defined by the following transfer function H, as shown in Equation (4):

$$H(f) = \begin{cases} H(f) = 1 & \text{for } |f| < f_N(1-\alpha) \\ \sqrt{\frac{1}{2} + \frac{1}{2}\sin\left[\frac{\pi}{2f_N}\left(\frac{f_N - |f|}{\alpha}\right)\right]} & \text{for } f_N(1-\alpha) \le |f| \le f_N(1+\alpha) \\ H(f) = 0 & \text{for } |f| > f_N(1+\alpha) \end{cases} \tag{4}$$

where

$f_N = \frac{1}{2T_S} = \frac{R_S}{2}$ is the Nyquist frequency

8.1.4.4.9 Transmitted waveform

The transmitted waveform at the antenna port $S(t)$ shall be as described by Equation (5).

$$S(t) = I(t)\cos(2\pi f_c t) - Q(t)\sin(2\pi f_c t) \tag{5}$$

where

$I(t)$ and $Q(t)$are the filtered baseband (pulse-shaped) signals of the I_k and Q_k symbols
k is the discrete symbol index
f_c is the carrier frequency

8.1.5 UL PHY

8.1.5.1 UL subframe

The structure of the UL subframe used by the SS to transmit to the BS is shown in Figure 193. The following three classes of bursts may be transmitted by the SS during the UL subframe:

a) Those that are transmitted in contention opportunities reserved for initial ranging.
b) Those that are transmitted in contention opportunies defined by Request Intervals reserved for response to multicast and broadcast polls.
c) Those that are transmitted in intervals defined by Data Grant IEs specifically allocated to individual SSs.

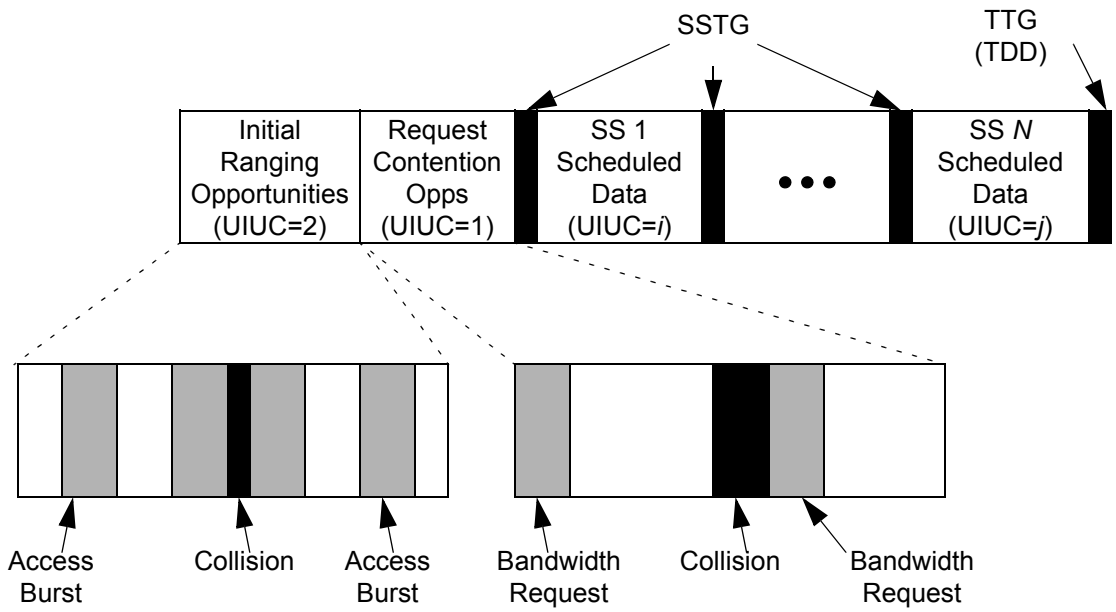

Figure 193—UL subframe structure

Any of these burst classes may be present in any given frame. They may occur in any order and any quantity (limited by the number of available PSs) within the frame, at the discretion of the BS UL scheduler as indicated by the UL_MAP in the frame control section (part of the DL subframe).

The bandwidth allocated for initial ranging and request contention opportunies may be grouped together and is always used with the UL burst profiles specified for initial ranging intervals (UIUC = 2) and request intervals (UIUC = 1), respectively. The remaining transmission slots are grouped by the SS. During its scheduled bandwidth, an SS transmits with the burst profile specified by the BS.

SSTGs separate the transmissions of the various SSs during the UL subframe. The gap allows for ramping down of the previous burst, followed by a preamble allowing the BS to synchronize to the new SS. The preamble and gap lengths are broadcast periodically in the UCD message.

8.1.5.1.1 UL burst preamble

Each UL burst shall begin with an UL preamble. This preamble is based upon a repetition of a +45 degrees rotated constant amplitude zero auto-correlation (CAZAC) sequence (Milewski [B39]). The preamble length is either 16 symbols or 32 symbols. In the 16-symbol preamble (whose sequence is specified in Table 231), the CAZAC sequence is of length 8 and repeated once. In the 32-symbol preamble (whose sequence is specified in Table 232), the CAZAC sequence is of length 16 and repeated once.

Table 231—16-symbol UL preamble sequence

Symbol	I	Q	*B*(1)	*B*(2)
1 and 9	1	1	0	0
2 and 10	–1	–1	1	1
3 and 11	–1	1	1	0
4 and 12	1	1	0	0
5 and 13	1	1	0	0
6 and 14	1	1	0	0
7 and 15	–1	1	1	0
8 and 16	–1	–1	1	1

Table 232—32-symbol UL preamble sequence

Symbol	I	Q	*B*(1)	*B*(2)
1 and 17	–1	–1	1	1
2 and 18	–1	–1	1	1
3 and 19	1	1	0	0
4 and 20	1	1	0	0
5 and 21	–1	–1	1	1
6 and 22	1	1	0	0
7 and 23	1	–1	0	1
8 and 24	1	1	0	0
9 and 25	1	–1	0	1
10 and 26	–1	–1	1	1
11 and 27	–1	–1	1	1
12 and 28	1	1	0	0
13 and 29	1	1	0	0
14 and 30	1	1	0	0
15 and 31	–1	1	1	0
16 and 32	1	1	0	0

The amplitude of the preamble shall depend on the UL power adjustment rule (8.1.5.3.7). In the case of the constant peak power scheme (power adjustment rule = 0), the preamble shall be transmitted so that its constellation points coincide with the outermost constellation points of the modulation scheme in use. In the case of the constant mean power scheme (power adjustment rule = 1), it shall be transmitted with the mean power of the constellation points of the modulation scheme in use.

The BS defines the preamble length through the UCD message.

8.1.5.1.2 UL-MAP IE definition

The format of UL-MAP IEs shall be as defined in Table 233 and utilized according to 6.3.2.3.4. The UIUC shall be one of the values defined in Table 234. The Offset indicates the start time, in units of minislots, of the burst relative to the Allocation Start Time given in the UL-MAP message. The end of the last allocated burst is indicated by allocating an End of map burst (CID = 0 and UIUC = 10) with zero duration. The time instants indicated by the offsets are the transmission times of the first symbol of the burst, including the preamble.

Table 233—SC UL-MAP IE format

Syntax	Size (bit)	Notes
UL-MAP_IE() {	—	—
CID	16	—
UIUC	4	—
if (UIUC == 15) {	—	—
Extended UIUC-dependent IE	*variable*	See subclauses following 8.1.5.1.2.1.
} else {	—	—
Offset	12	Offset, in units of minislots, of the preamble relative to the Allocation Start Time.
}	—	—
}	—	—

Table 234—SC UIUC values

IE name	UIUC	Connection ID	Description
—	0	N/A	*Reserved*
Request	1	any	Starting offset of request region.
Initial Ranging	2	broadcast	Starting offset of maintenance region (used in initial ranging).
—	3	N/A	*Reserved*
Data Grant Burst Type 1	4	unicast	Starting offset of Data Grant Burst Type 1 assignment.
Data Grant Burst Type 2	5	unicast	Starting offset of Data Grant Burst Type 2 assignment.

Table 234—SC UIUC values *(continued)*

IE name	UIUC	Connection ID	Description
Data Grant Burst Type 3	6	unicast	Starting offset of Data Grant Burst Type 3 assignment.
Data Grant Burst Type 4	7	unicast	Starting offset of Data Grant Burst Type 4 assignment.
Data Grant Burst Type 5	8	unicast	Starting offset of Data Grant Burst Type 5 assignment.
Data Grant Burst Type 6	9	unicast	Starting offset of Data Grant Burst Type 6 assignment.
End of Map	10	zero	Ending offset of the previous grant. Indicates the first minislot after the end of the UL allocation. The burst profile is well known and shall not be included in the UCD message. Used to bound the length of the last actual interval allocation.
Gap	11	zero	Used to schedule gaps in transmission.
—	12–14	N/A	*Reserved*
Extended	15	N/A	See 8.1.5.1.2.1.

8.1.5.1.2.1 UL-MAP Extended IE format

A UL-MAP IE entry with a UIUC = 15 indicates that the IE carries special information and conforms to the structure shown in Table 235. A station shall ignore an extended IE entry with a subcode value for which the station has no knowledge. In the case of a known subcode value but with a length field longer than expected, the station shall process information up to the known length and ignore the remainder of the IE.

Table 235—SC UL-MAP Extended IE format

Syntax	Size (bit)	Notes
UL_Extended_IE() {	—	—
Subcode	4	0x00..0x0F
Length	4	Length in bytes of Unspecified Data field
Unspecified data	*variable*	—
}	—	—

8.1.5.1.2.2 UL-MAP Power Control IE format

When a power change for the SS is needed, the extended UIUC = 15 is used with the subcode set to 0x00 as shown in Table 236. The power control value is an 8-bit signed integer expressing the change in power level (in 0.25 dB units) that the SS should apply to correct its current transmission power. The CID used in the IE shall be the Basic CID of the SS.

Table 236—SC Power Control IE format

Syntax	Size (bit)	Notes
Power_Control_IE() {	—	—
Extended UIUC	4	Fast power control = 0x00
Length	4	Length = 1
Power control	8	Signed integer, which expresses the change in power level (in 0.25 dB units) that the SS should apply to correct its current transmission power.
}	—	—

8.1.5.1.3 Required UCD parameters

The following parameters shall be included in the UCD message:

— Preamble Length

The following parameters may be included in the UCD message and if absent shall have their default values:

— SSTG
— Roll-off Factor

UL symbol rate and frequency are implied by the DL symbol rate and frequency.

8.1.5.1.4 UL channel

Since SSs do not transmit in the UL channel until they have received some minimal configuration information from the BS, it is possible to support several different configurations that can be adjusted on an UL channel basis or on a burst by burst basis. These parameters, and their ranges, are supported through MAC signaling, as described in 6.3.2.3.3.

8.1.5.1.5 Uplink_Burst_Profile

Each Uplink_Burst_Profile in the UCD message (6.3.2.3.3) shall include the following parameters:

— Modulation type
— FEC Code Type
— Last codeword length
— Preamble Length
— Randomizer Seed

If the FEC Code Type is 1, 2, or 3 (RS codes), the Uplink_Burst_Profile shall also include the following:

— RS information bytes (K)
— RS parity bytes (R)

If the FEC Code Type is 2, the Uplink_Burst_Profile shall also include the following:

— BCC code type

If the FEC Code Type is 4, the Uplink_Burst_Profile shall also include the following:

— BTC row code type
— BTC column code type
— BTC interleaving type

Table 237 illustrates the format of the Uplink_Burst_Profile, which is encoded with a Type of 1.

Table 237—SC Uplink_Burst_Profile format

Syntax	Size (bit)	Notes
Type = 1	8	—
Length	*variable*	—
Reserved	4	Shall be set to zero
UIUC	4	—
TLV encoded information	*variable*	TLV-specific

Within each Uplink_Burst_Profile is an unordered list of PHY attributes, encoded as TLV values (see 11.3.1).

8.1.5.2 UL TCS

The UL TCS operation shall be identical to the DL TCS operation, as described in 8.1.4.3.

8.1.5.3 UL PMD sublayer

The UL PHY coding and modulation are summarized in the block diagram shown in Figure 194.

8.1.5.3.1 Randomization for spectrum shaping

The UL modulator shall implement a randomizer using the polynomial $x^{15} + x^{14} + 1$. At the beginning of each burst, the register is cleared and the Randomizer Seed value 100101010000000 is loaded. The Randomizer Seed value shall be used to calculate the randomizer bit, which is combined in an XOR with the first bit of data of each burst (which is the MSB of the first symbol following the last symbol of the preamble).

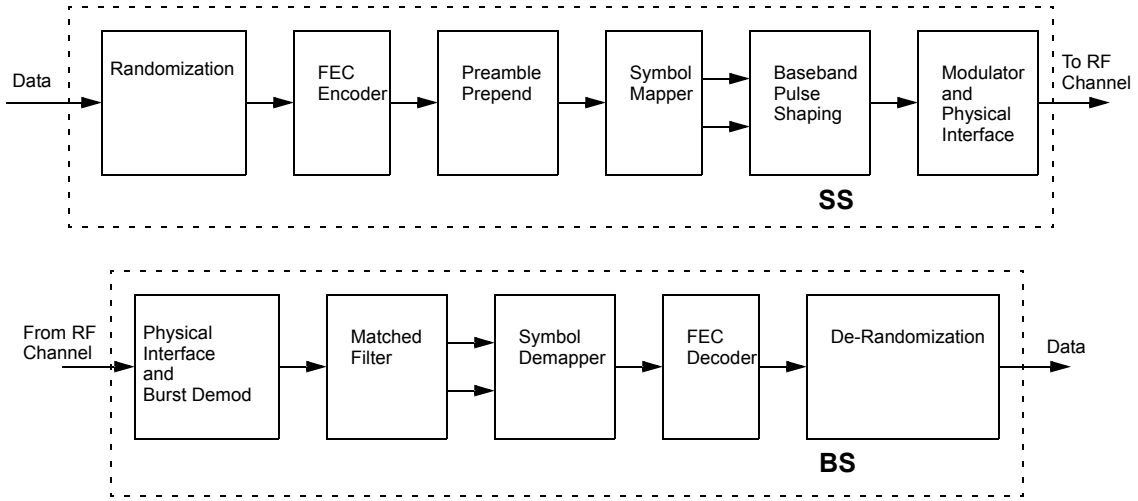

Figure 194—Conceptual block diagram of the UL PHY

8.1.5.3.2 UL FEC

The UL FEC schemes are as described in 8.1.4.4.4, including Table 221.

8.1.5.3.2.1 Outer code for Code Types 1–3, UL

The outer codes for Code Types 1–3 are nearly identical to those of the DL (8.1.4.4.4.1), with the following exceptions:

a) *Fixed Codeword Operation.* In the fixed codeword operation, the number of information bytes in each codeword is always the same (K). If the MAC messages in a burst require fewer bytes than are carried by an integral number of Reed-Solomon codewords, stuff bytes (FF_{hex}) shall be added between MAC messages or after the last MAC message so that the total message length is an integral multiple of K bytes.

   The SS determines the number of codewords in its UL burst from the UL-MAP message, which defines the beginning point of each burst, and hence the length. The BS determines the number of codewords in the received UL burst as it scheduled this transmission event and is aware about its length. Using the burst length, both the SS and the BS calculate the number of full-length RS codewords that can be carried by each burst.

   The process used by the SS to encode each burst is identical to the process performed by the BS in DL fixed codeword operation (8.1.4.4.4.1).

b) *Shortened Last Codeword Operation.* In the shortened last codeword operation, the number of information bytes in the final Reed-Solomon block of each burst is reduced from the normal number K, while the number of parity bytes R remains the same. The BS tailors the number of information bytes in the last codeword, allowing the SS to transport as many information bytes as possible in each UL burst. The BS implicitly communicates the number of bytes in the shortened last codeword to the SS via the UL-MAP message, which defines the starting minislot of each burst. The SS uses the UL-MAP information to calculate the number of full-length RS codewords and the length of the shortened last codeword that can be carried within the specified burst size. This calculation shall take into account the number of bytes in the burst used for the preamble and coding bytes as well as the guard time. The BS performs a similar calculation as the SS for its decoding purposes.

   To allow the receiving hardware to decode the previous Reed-Solomon codeword, no Reed-Solomon codeword shall have less than 6 information bytes. The number of information bytes carried by

the shortened last codeword shall be between 6 and *K* bytes inclusive. In this mode, the BS shall only allocate bursts that result in shortened last codewords of the proper length.

When using Code Type 2, the number of information bytes in the shortened last codeword shall always be an even number so that the total codeword size is also an even number. Both BS and SS shall take this into account when calculating the number of information bytes in the last codeword.

The process used by the SS to encode each burst is identical to the process used by the BS in DL shortened last codeword operation (8.1.4.4.4.1).

8.1.5.3.2.2 Inner code for Code Type 2, UL

See 8.1.4.4.4.2.

8.1.5.3.2.3 Inner code for Code Type 3, UL

See 8.1.4.4.4.3.

8.1.5.3.2.4 Code Type 4, UL

Code Type 4 in the UL is similar to the DL case (8.1.4.4.4.4). Some exceptions apply to the UL due to the smaller payload expected within a burst. For example, using a similar two-dimensional shortening process, a 57-byte code is composed of (32,26) constituent codes which have been shortened by seven rows and two columns as described in Figure 195. The end result is a (30,24)×(25,19) array, which is capable of encoding 24 × 19 = 456 bits (57 bytes). Table 238 summarizes this code example.

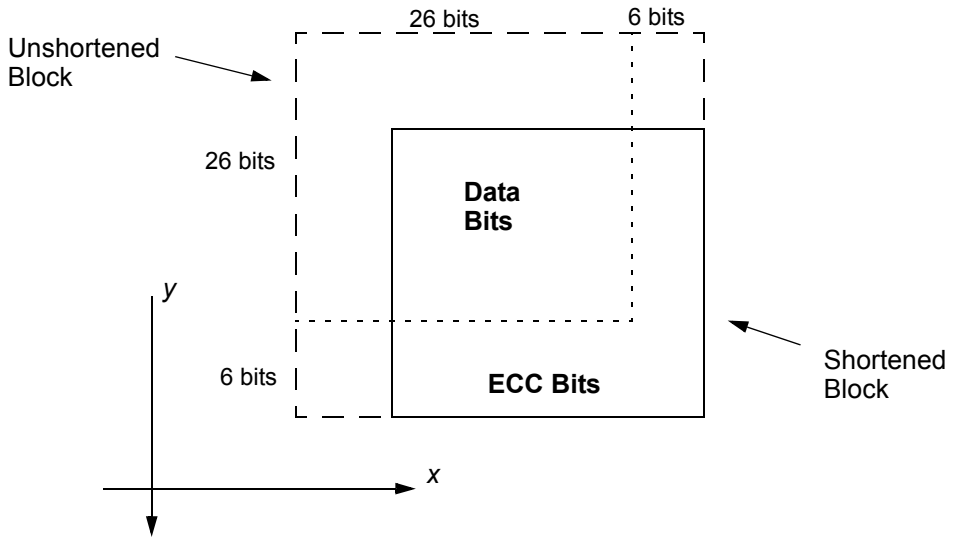

Figure 195—Structure of shortened 2 D block

Table 238—Required block codes for the BTC option for the UL channel

Code	(30,24)×(25,19)
Aggregate Code Rate	0.608
UL/DL/Both	UL
Block size (payload bits)	456 (57 bytes)

8.1.5.3.3 Shortening of FEC blocks in UL

Shortening of FEC blocks in the UL is identical to the handling in the DL as described in 8.1.4.2 or 8.1.4.4.4.1.

8.1.5.3.4 Number of scheduled UL bursts per frame

Only one scheduled burst (UIUC 4–9) per SS shall be included in the UL-MAP for any given frame.

8.1.5.3.5 Coding of the Request IE Uplink_Burst_Profile

The UL burst profile associated with the Request IE (UIUC = 1) shall use Modulation Type = 1 (QPSK) and shall use FEC Code Type = 1 or 2. The other parameters of the Uplink_Burst_Profile encoding shall be chosen so that the resulting UL burst profile is no less robust than the most robust UL burst profile associated with any of the Data Grant Burst Type IEs.

8.1.5.3.6 Coding of the initial ranging Uplink_Burst_Profile

The burst profile for the initial ranging UIUC shall be the same as for the frame control section, as defined in 8.1.4.4.6.

8.1.5.3.7 UL modulation

The modulation used on the UL channel shall be variable and set by the BS. QPSK shall be supported, while 16-QAM and 64-QAM are optional, with the mappings of bits to symbols identical to those described in 8.1.4.4.7.

In changing from one burst profile to another, the SS shall use one of two power adjustment rules: maintaining constant constellation peak power (power adjustment rule = 0), or maintaining constant constellation mean power (power adjustment rule = 1). In the constant peak power scheme, corner points are transmitted at equal power levels regardless of modulation type. In the constant mean power scheme, the signal is transmitted at equal mean power levels regardless of modulation type. The power adjustment rule is configurable through the UCD Channel Encoding parameters (11.3.1).

In changing from one modulation scheme to another (i.e., during burst profile change), sufficient RF power amplifier margins should be maintained to prevent violation of emissions masks.

8.1.5.3.8 Baseband pulse shaping

Prior to modulation, the I and Q signals shall be filtered by square-root raised cosine filters as specified in 8.1.4.4.8.

8.1.5.3.9 Transmitted waveform

The transmitted waveform shall be as described in 8.1.4.4.9.

8.1.6 Baud rates and channel bandwidths

A large amount of spectrum is potentially available in the 10–66 GHz range for PMP systems. Although regulatory requirements vary between different regions, sufficient commonality exists for a default RF channel bandwidth to be specified for each major region. This is necessary in order to ensure that products built to this standard have interoperability over the air interface.

Systems shall use Nyquist square-root raised cosine pulse shaping with a roll-off factor of 0.25 and shall operate on the default RF channel arrangement shown in Table 239. Note that baud rates are chosen to provide an integer number of PSs per frame. The frame duration choice compromises between transport efficiency (with lower frame overhead) and latency.

Table 239—Baud rates and channel sizes for a roll-off factor of 0.25

Channel size (MHz)	Symbol rate (MBd)	Bit rate (Mb/s) QPSK	Bit rate (Mb/s) 16-QAM	Bit rate (Mb/s) 64-QAM	Recommended frame duration (ms)	Number of PSs/frame
20	16	32	64	96	1	4000
25	20	40	80	120	1	5000
28	22.4	44.8	89.6	134.4	1	5600

Due to wide variations in local regulations, no frequency plan is specified in this standard. No single plan can accommodate all cases. For example, the 24.5–26.5 GHz band in Europe is regulated by CEPT requirements concerning specific duplex spacing and rasters. This does not match a similar spectrum allocation in North America.

8.1.7 Radio subsystem control

8.1.7.1 Synchronization technique

The DL demodulator typically provides an output reference clock that is derived from the DL symbol clock. This reference can then be used by the SS to provide timing for rate critical interfaces when the DL clock is locked to an accurate reference at the BS.

Accurate UL time slot synchronization is supported through a ranging calibration procedure defined by the MAC to ensure that UL transmissions by multiple users do not interfere with each other. Therefore, the PHY needs to support accurate timing estimates at the BS, and the flexibility to finely modify the timing at the SS according to the transmitter characteristics specified in 8.1.8.

8.1.7.2 Frequency control

In order to meet more stringent coexistence requirements in place today, the transmitted RF center frequency for both the BS and at each SS shall have an accuracy better than $\pm 10 \times 10^{-6}$. The value shall be guaranteed over the complete temperature range and time of operation, i.e., aging for FWA equipment. In order to meet this main requirement, the following additional requirements have been derived for both BS and SS. The carrier frequency accuracy for the BS shall be better than $\pm 8 \times 10^{-6}$. Therefore

— The carrier frequency accuracy for the BS shall be $\pm 8 \times 10^{-6}$.
— The SS shall be locked in frequency to the BS.
— The carrier frequency of the SS shall be within $\pm 1 \times 10^{-6}$ of that of the BS.

8.1.7.3 Power control

The power control algorithm shall be supported for the UL channel with both an initial calibration and periodic adjustment procedure without loss of data. The BS should be capable of providing accurate power measurements of the received burst signal. This value can then be compared against a reference level, and the resulting error can be fed back to the SS in a calibration message coming from the MAC. The power

control algorithm shall be designed to support power attenuation due to distance loss or power fluctuations at rates of at most 20 dB/second with depths of at least 40 dB. The exact algorithm implementation is vendor-specific. The total power control range consists of both a fixed portion and a portion that is automatically controlled by feedback. The power control algorithm shall take into account the interaction of the RF power amplifier with different burst profiles. For example, when changing from one burst profile to another, margins should be maintained to prevent saturation of the amplifier and to prevent violation of emissions masks.

In support of FPC for SC, the CRABS report [B8] describes results that demonstrate LMDS frequency bands experiencing significant fast fading both due to rain and foliage impairments. FPC will also allow the decoupling of accurate rain fade margin setting on links and improve resilience. The report presented in Sydor [B44], although reporting measurements for the 5 GHz band, indicates fades up to 180dB/s based on obstruction from trees.

8.1.8 Minimum performance

This subclause details the minimum performance requirements for proper operation of systems in the frequency range of 24–32 GHz. The values listed in this subclause apply over the operational environmental ranges of the system equipment.

The philosophy taken in this subclause is to guarantee SS interoperability. Hence, the BS is described only in terms of its transmitter (Table 240), while the SS is described in terms of both its transmitter (Table 241) and receiver (Table 242). It is expected that BS manufacturers will use SS transmitter performance coupled with typical deployment characteristics (cell size, channel loading, near-far users, etc.) to profile their receiver equipment emphasizing specific performance issues as they require.

Table 240—Minimum BS transmitter performance

Tx symbol timing accuracy	Peak-to-peak symbol jitter, referenced to the previous symbol zero crossing, of the transmitted waveform, shall be less than 0.02 of the nominal symbol duration over a period of 2 s. The peak-to-peak cumulative phase error, referenced to the first symbol time and with any fixed symbol frequency offset factored out, shall be less than 0.04 of the nominal symbol duration over a period of 0.1 s. The Tx symbol timing shall be accurate to within $\pm 8 \times 10^{-6}$ (including aging and temperature variations).
Tx RF frequency/accuracy	10–66 GHz/ $\pm 8 \times 10^{-6}$ (including aging and temperature variations).
Spectral mask (out of band/block)	Per relevant local regulation requirements (see 8.1.8.2.2 for more details).
Spurious	Per relevant local regulatory requirements.
Maximum Ramp Up/Ramp Down Time	8 symbols (2 PSs).

Table 240—Minimum BS transmitter performance *(continued)*

Modulation accuracy (expressed in EVM, as in 8.1.8.2.3)	12% (QPSK); 6% (16-QAM) (Measured with an Ideal Receiver without Equalizer, all transmitter impairments included), and 10% (QPSK); 3% (16-QAM), 1.5% (64-QAM) (Measured with an Ideal Receiver with an Equalizer, linear distortion removed). NOTE—Tracking loop bandwidth is assumed to be between 1% to 5% optimized per phase noise characteristics. The tracking loop bandwidth is defined in the following way. A lowpass filter with unity gain at DC and frequency response $H(f)$, has a tracking loop (noise) bandwidth (B_L), defined as the integral of $\|H(f)\|$ squared from 0 to the sampling frequency. The output power of white noise passed through an ideal brick wall filter of bandwidth B_L shall be identical to that of white noise passed through any lowpass filter with the same tracking loop (noise) bandwidth.

Table 241—Minimum SS transmitter performance

Tx Dynamic range	40 dB.
Tx RMS Power Level at Maximum Power Level setting for QPSK	At least +15 dBm (measured at antenna port).
Tx power level adjustment steps and accuracy	The SS shall adjust its Tx power level, based on feedback from the BS via MAC messaging, in steps of 0.5 dB in a monotonic fashion. [This required resolution is due to the small gap in sensitivities between different burst profiles (3–4 dB typical).]
Tx symbol timing jitter	Peak-to-peak symbol jitter, referenced to the previous symbol zero crossing, of the transmitted waveform, shall be less than 0.02 of the nominal symbol duration over a period of 2 s. The peak-to-peak cumulative phase error, referenced to the first symbol time and with any fixed symbol frequency offset factored out, shall be less than 0.04 of the nominal symbol duration over a period of 0.1 s.
Symbol clock	Shall be locked to BS symbol clock.
Tx burst timing accuracy	Shall implement corrections to burst timing in steps of up to $\pm$0.5 of a symbol with step accuracy of up to $\pm$0.25 of a symbol.
Tx RF frequency/accuracy	SS frequency locking to BS carrier required. 10–66 GHz/ $\pm 1 \times 10^{-6}$(including aging and temperature variations).
Spectral Mask (out of band/block)	Per relevant local regulation requirements (see 8.1.8.2.2 for more details).
Maximum Ramp Up/Ramp Down Time	8 symbols (2 PSs).
Maximum output noise power spectral density when Tx is not transmitting information	–80 dBm/MHz (measured at antenna port).
Modulation accuracy (expressed in EVM, as in 8.1.8.2.3)	As specified in Table 240.

NOTE—The interfering source shall be a continuous signal of the same modulation type as the primary signal. The spectral mask of the interfering signal shall depend on local regulatory requirements.

Table 242—Minimum SS receiver performance

Bit error rate (BER) performance threshold	For BER = 1×10^{-3}: QPSK: $-94 + 10\log_{10}(R)$ 16-QAM: $-87 + 10\log_{10}(R)$ 64-QAM: $-79 + 10\log_{10}(R)$ For BER = 1×10^{-6}: QPSK: $-90 + 10\log_{10}(R)$ 16-QAM: $-83 + 10\log_{10}(R)$ 64-QAM: $-74 + 10\log_{10}(R)$ NOTE— Measured uncoded in dBm, where R denotes carrier symbol rate in MBd. Propagation models of Type 0, 1, or 2 (Table 243) are used.
Maximum Transition time from Tx to Rx and from Rx to Tx	2 µs (TDD) 20 µs (FDD, half-duplex terminal)
1st Adjacent Channel Interference	At BER 10^{-3}, for 3 dB degradation: C/I = –9 (QPSK), –2 (16-QAM), and +5 (64-QAM) At BER 10^{-3}, for 1 dB degradation: C/I = –5 (QPSK), +2 (16-QAM), and +9 (64-QAM) At BER 10^{-6}, for 3 dB degradation: C/I = –5 (QPSK), +2 (16-QAM), and +9 (64-QAM) At BER 10^{-6}, for 1 dB degradation: C/I = –1 (QPSK), +6 (16-QAM), and +13 (64-QAM) NOTE—Measured uncoded, in dB.
2nd Adjacent Channel Interference	At BER 10^{-3}, for 3 dB degradation: C/I = –34 (QPSK), –27 (16-QAM), and –20 (64-QAM) At BER 10^{-3}, for 1 dB degradation: C/I = –30 (QPSK), –22 (16-QAM), and –16 (64-QAM) At BER 10^{-6}, for 3 dB degradation: C/I = –30 (QPSK), –23 (16-QAM), and –16 (64-QAM) At BER 10^{-6}, for 1 dB degradation: C/I = –26 (QPSK), –20 (16-QAM), and –12 (64-QAM) NOTE—Measured uncoded, in dB.

8.1.8.1 Propagation conditions

LOS radio propagation conditions between the BS and the SSs are required to achieve high quality and availability service. Also, the SSs need highly directional antennas, which minimize the number of multipaths and interference from unexpected sources. The intersymbol interference may occur as a consequence of multipaths.

8.1.8.1.1 Propagation models

In this subclause, the propagation models referred to in this specification are defined. No further BER performance degradation should be expected with all propagation model types.

The channel model is expressed as follows:

$$H(j\omega) = C_1 \exp(-j\omega T_1) + C_2 \exp(-j\omega T_2) + C_3 \exp(-j\omega T_3) \quad (6)$$

Here C_1,C_2, and C_3 are the complex tap amplitudes and T_1,T_2, and T_3 are the tap delays. These parameters are provided in Table 243, where R is the channel symbol rate in MBd and the resulting tap delay is in ns. For example, if R = 20 MBd, then the resulting Type 2 tap delays will be 0, 20, and 40 ns.

Table 243—Propagation models

Propagation model	Tap number i	Tap amplitude C_i	Tap delay T_i
Type 0	1	1.0	0
Type 1	1	0.995	0
	2	0.0995 exp(–j 0.75)	400/R
Type 2	1	0.286 exp(–j 0.75)	0
	2	0.953	400/R
	3	–0.095	800/R

NOTE—Propagation path parameters are valid for R from 15 to 25 MBd.

Type 0 represents a clear LOS scenario. Type 1 and Type 2 represent typical deployment scenarios with weak multipath components, Type 1 having better conditions.

8.1.8.1.2 Rain fades

For 10–66 GHz frequencies of operation, the predominant fade mechanism is that resulting from rain attenuation. Fade depths are geographically dependent by rain rate region and are also conditioned by both frequency of operation and link distance. For a given set of equipment transmission parameters and a specified link availability requirement, the rain rate criteria establish the maximum cell radius appropriate to system operation.

An internationally accepted method for computation of rain fade attenuation probability is that defined by ITU-R P.530-8 [B36]. As an example, typical 28 GHz equipment parameters result in a maximum cell radius of about 3.5 km in ITU rain region K. This criteria applies for a link BER = 10^{-6} at a link availability of 99.995%. Further details on this example system model may be found in IEEE Std 802.16.2.

Another important issue is the impact of uncorrelated rain fading between an interference transmission link and a victim transmission link. Under rain fading conditions, the differential rain fading loss between the two transmission paths may have a significant impact on both intrasystem and intersystem link availability. At operational frequencies around 28 GHz, the estimated rain cell diameter is approximately 2.4 km (ITU-R P.452 [B33]). The effect of rain decorrelation may be estimated based on cell sector size and the specified frequency reuse plan.

A significant mitigation technique for the control of both intrasystem and intersystem interference is the angular discrimination provided by system antennas. The antenna radiation pattern envelope (RPE) discrimination has significance for both clear sky and rain faded propagation conditions. The RPE requirements for aggressive intrasystem frequency reuse plans may exceed the RPE requirements for the

control of inter-system coexistence. Recommended antenna RPE characteristics are described in IEEE Std 802.16.2.

8.1.8.2 Transmitter characteristics

Unless stated otherwise, the transmitter requirements are referenced to the transmitter output port and apply with the transmitter tuned to any channel.

8.1.8.2.1 Output power

In the following subclause, power is defined as the time-averaged power when emitting a signal (excluding off-time between bursts), measured over the randomized bits of one transmitted burst.

The power at which SS or BSs shall operate is specified in the following subclause.

8.1.8.2.1.1 BS

A BS shall not produce an effective isotropic radiated power (EIRP) spectral density exceeding either +28.5 dBmi/MHz or local regulatory requirements.

8.1.8.2.1.2 SS

An SS shall not produce an EIRP spectral density exceeding either +39.5 dBmi/MHz or local regulatory requirements.

8.1.8.2.2 Emission mask and adjacent channel performance (NFD)

Tx parameters shall comply with existing ETSI standards having more stringent requirements, in particular

— Frequency band 40.5 GHz to 43.5 GHz: EN 301 997-1
— Frequency band 24.25 GHz to 29.5 GHz: EN 301 213-3

In the DL channel, the transmitted spectrum shall not exceed the spectrum mask defined by Table 244, which specifies more stringent requirements than System Type C spectrum mask defined in EN 301 213-3.

Table 244—DL spectrum mask at 28MHz channel

Frequency offset (MHz)	13	14	14.4	14.8	22.4	28	56	70
Relative attenuation (dB)	0	–15	–20	–28	–34	–42	–52	–52

In the UL channel, the transmitted spectrum shall not exceed the spectrum mask defined by Table 245, which is derived from the requirements given by System Type B spectrum mask defined in EN 301 213-3.

Table 245—UL spectrum mask at 28MHz channel

Frequency offset (MHz)	11.2	13.5	14.5	22.4	28	56	70
Relative attenuation (dB)	0	–7	–17	–32	–37	–52	–52

The Net-Filter-Discriminator (NFD) mask, which shall be guaranteed by the system, is defined by Table 246.

Table 246—DL and UL NFD mask

Offset (MHz)	FD - DL (dB)	FD - UL (dB)
28	35.5	29
31.5	39	34.5
35	42	38.5
38.5	45	41
42	46.5	43
49	49	46.5
56	51	50
59.5	51.5	51
63	52	51.5
70	52	52
77	52	52
84	52	52

8.1.8.2.3 Modulation accuracy and error vector magnitude (EVM)

The EVM defines the average constellation error with respect to the farmost constellation point power, as illustrated in Figure 196 and defined by Equation (7).

$$EVM = \sqrt{\frac{\frac{1}{N}\sum_{1}^{N}(\Delta I^2 + \Delta Q^2)}{S_{\max}^2}} \tag{7}$$

where

N is the number of symbols in the measurement period and $S_{\max}$ the maximum constellation amplitude.

The EVM shall be measured over the continuous portion of a burst occupying at least 1/4 of the total transmission frame at maximum power settings.

The required EVM can be estimated from the transmitter implementation margin if the error vector is considered noise, which is added to the channel noise.

The implementation margin means the excess power needed to keep the C/N constant when going from the ideal to the real transmitter. EVM cannot be measured at the antenna connector but should be measured by an “ideal” receiver with a certain carrier recovery loop bandwidth specified in percent of the symbol rate. In

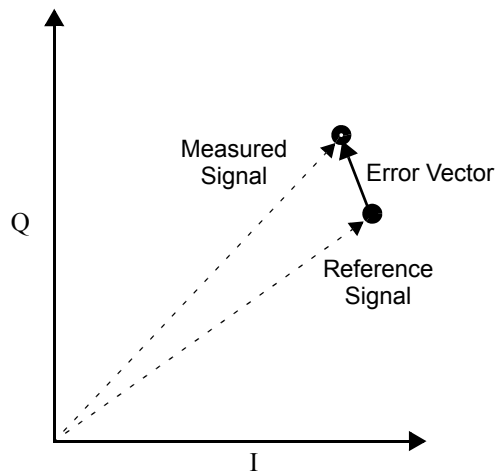

Figure 196—Illustration of EVM

Table 247, the EVM-values for different modulation schemes are specified using parameters relevant to the system.

Table 247—EVM values vs. modulation scheme

Modulation	Tx implementation margin (dB)	Rx-AWGN C/N (dB) BER = 10E-6 4 MAC-PDUs	Peak-to-average (dB)	EVM (%) Without equalization	EVM (%) With equalization
4-QAM + RS	0.5	10	0	12	10
16-QAM + RS	1.0	17	2.55	6	3
64-QAM + RS	1.5	23	3.68	N/A	1.5

Based on the values in Table 247 the EVM values shall be the following:

— EVM 12% and 6% for 4-QAM, 16-QAM respectively when measured by an “ideal” receiver without an equalizer with a carrier recovery loop bandwidth of 1% to 5%; and

— EVM 10%, 3%, and 1.5% for 4-QAM, 16-QAM, and 64-QAM respectively when measured by an “ideal” receiver with an equalizer with a carrier recovery loop bandwidth of 1% to 5%.

The above measured EVM shall include the Tx filter accuracy, D/A-converter, modulator imbalances, untracked phase noise, and power amplifier (PA) nonlinearity.

8.1.9 Channel quality measurements

8.1.9.1 Introduction

RSSI and CINR signal quality measurements and associated statistics can aid in such processes as BS selection/assignment and burst adaptive profile selection. As channel behavior is time-variant, both mean and standard deviation are defined.

The process by which RSSI measurements are taken does not necessarily require receiver demodulation lock; for this reason, RSSI measurements offer reasonably reliable channel strength assessments even at low signal levels. On the other hand, although CINR measurements require receiver lock, they provide information on the actual operating condition of the receiver, including interference and noise levels, and signal strength.

8.1.9.2 RSSI mean and standard deviation

When collection of RSSI measurements is mandated by the BS, an SS shall obtain an RSSI measurement from the DL burst preambles. From a succession of RSSI measurements, the SS shall derive and update estimates of the mean and the standard deviation of the RSSI, and report them via REP-RSP messages.

Mean and standard deviation statistics shall be reported in units of decibels relative to 1 mW (dBm) and decibels, respectively. To prepare such reports, statistics shall be quantized in 1 dB increments, ranging from –40 dBm (encoded 0x53) to –123 dBm (encoded 0x00). Values outside this range shall be assigned the closest extreme value within the scale. The standard deviation shall be quantized in 0.5 dB increments (i.e., standard deviation < 0.5 dB encoded 0x00, 0.5 dB ≤ standard deviation < 1.0dB encoded 0x01).

The method used to estimate the RSSI of a single message is left to individual implementation, but the relative accuracy of a single signal strength measurement, taken from a single message, shall be ± 2 dB, with an absolute accuracy of ± 4 dB. This shall be the case over the entire range of input RSSIs. In addition, the range over which these single-message measurements are measured should extend 3 dB on each side beyond the –40 dBm to –123 dBm limits for the final averaged statistics that are reported.

The (linear) mean RSSI statistics (in milliwatts), derived from a multiplicity of single messages, shall be updated using Equation (8).

$$\hat{\mu}_{RSSI}[k] = \begin{cases} R[0] & k = 0 \\ (1-\alpha_{\text{avg}})\hat{\mu}_{RSSI}[k-1] + \alpha_{\text{avg}} R[k] & k > 0 \end{cases} \quad \text{mW} \tag{8}$$

where

k is the time index for the message (with the initial message being indexed by $k = 0$, the next message by $k = 1$, etc.)

$R[k]$ is the RSSI in mW measured during message k, and α_{avg} is an averaging parameter specified by the BS. The mean estimate in dBm shall then be derived from Equation (9).

$$\mu_{RSSI\ dBm}[k] = 10\log(\mu_{RSSI}[k]) \quad \text{dBm} \tag{9}$$

To solve for the standard deviation in dB, the expectation-squared statistic shall be updated using Equation (10).

$$\hat{x}^2_{RSSI}[k] = \begin{cases} |R[0]|^2 & k = 0 \\ (1-\alpha_{\text{avg}})\hat{x}^2_{RSSI}[k-1] + \alpha_{\text{avg}}|R[k]|^2 & k > 0 \end{cases} \tag{10}$$

Apply the result to Equation (11).

$$\hat{\sigma}_{RSSI\ dB} = 5\log\left(\left|\hat{x}^2_{RSSI}[k] - (\hat{\mu}_{RSSI}[k])^2\right|\right) \quad \text{dB} \tag{11}$$

8.1.9.3 CINR mean and standard deviation

When CINR measurements are mandated by the BS, an SS shall obtain a CINR measurement from the DL burst preambles. From a succession of these measurements, the SS shall derive and update estimates of the mean and the standard deviation of the CINR, and report them via REP-RSP messages.

Mean and standard deviation statistics for CINR shall be reported in units of dB. To prepare such reports, statistics shall be quantized in 1 dB increments, ranging from a minimum of –20 dB (encoded 0x00) to a maximum of 40 dB (encoded 0x3C). Values outside this range shall be assigned the closest extreme value within the scale.

The method used to estimate the CINR of a single message is left to individual implementation, but the relative and absolute accuracy of a CINR measurement derived from a single message shall be ±1 dB and ± 2 dB, respectively, for all input CINRs above 0 dB. In addition, the range over which these single-packet measurements are measured should extend 3 dB on each side beyond the –20 dB to 40 dB limits for the final reported, averaged statistics.

One possible method to estimate the CINR of a single message is by normalizing the mean-squared residual error of detected data symbols (and/or pilot symbols) by the average signal power using Equation (12).

$$CINR[k] = \frac{A[k]}{E[k]}, \tag{12}$$

where

$CINR[k]$ is the (linear) CINR for message k
$r[k,n]$ is received symbol n within message k
$s[k,n]$ is the corresponding detected or pilot symbol corresponding to received symbol n

$$A[k] = \sum_{n=0}^{N-1} |s[k,n]|^2 \tag{13}$$

is the average signal power, which is normally kept constant within a message by action of automatic gain control (AGC); and

$$E[k] = \sum_{n=0}^{N-1} |r[k,n] - s[k,n]|^2 \tag{14}$$

The mean CINR statistic (in decibels) shall be derived from a multiplicity of single messages using Equation (15).

$$\hat{\mu}_{CINR\ dB}[k] = 10\log(\hat{\mu}_{CINR}[k]) \tag{15}$$

where

$$\hat{\mu}_{CINR}[k] = \begin{cases} CINR[0] & k = 0 \\ (1-\alpha_{avg})\hat{\mu}_{CINR}[k-1] + \alpha_{avg} CINR[k] & k > 0 \end{cases} \quad (16)$$

where

k is the time index for the message (with the initial message being indexed by $k = 0$, the next message by $k = 1$, etc.)

$CINR[k]$ is a linear measurement of CINR (derived by any mechanism that delivers the prescribed accuracy) for message k; and α_{avg} is an averaging parameter specified by the BS

To solve for the standard deviation, the expectation-squared statistic shall be updated using Equation (17).

$$\hat{x}^2_{CINR}[k] = \begin{cases} |CINR[0]|^2 & k = 0 \\ (1-\alpha_{avg})\hat{x}^2_{CINR}[k-1] + \alpha_{avg}|CINR[k]|^2 & k > 0 \end{cases} \quad (17)$$

and the result applied to Equation (18).

$$\hat{\sigma}_{CINR\ dB} = 5\log\left(\left|\hat{x}^2_{CINR}[k] - (\hat{\mu}_{CINR}[k])^2\right|\right) \quad \text{dB} \quad (18)$$

8.2 Reserved

8.3 WirelessMAN-OFDM PHY

8.3.1 Introduction

The WirelessMAN-OFDM PHY is based on OFDM modulation and designed for NLOS operation in the frequency bands below 11 GHz as per 1.3.4.

8.3.1.1 OFDM symbol description

8.3.1.1.1 Time domain

Inverse-Fourier-transforming creates the OFDM waveform; this time duration is referred to as the useful symbol time T_b. A copy of the last T_g of the useful symbol period, termed CP, is used to collect multipath, while maintaining the orthogonality of the tones. Figure 197 illustrates this structure.

The transmitter energy increases with the length of the guard time while the receiver energy remains the same (the cyclic extension is discarded), so there is a $10\log(1 - T_g/(T_b + T_g))/\log(10)$ dB loss in E_b/N_0. The CP overhead fraction and resultant SNR loss could be reduced by increasing the FFT size, which would however, among other things, adversely affect the sensitivity of the system to phase noise of the oscillators. Using a cyclic extension, the samples required for performing the FFT at the receiver can be taken anywhere over the length of the extended symbol. This provides multipath immunity as well as a tolerance for symbol time synchronization errors.

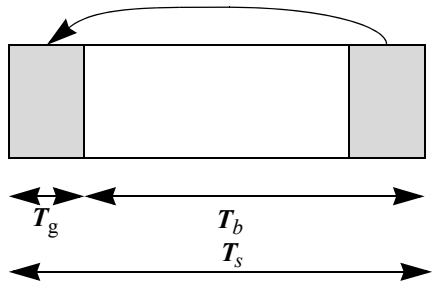

Figure 197—OFDM symbol time structure

On initialization, an SS should search all possible values of CP until it finds the CP being used by the BS. The SS shall use the same CP on the UL. Once a specific CP duration has been selected by the BS for operation on the DL, it should not be changed. Changing the CP would force all the SSs to resynchronize to the BS.

8.3.1.1.2 Frequency domain

The frequency domain description includes the basic structure of an OFDM symbol.

An OFDM symbol (see Figure 198) is made up from subcarriers, the number of which determines the FFT size used. There are three subcarrier types. They are as follows:

— Data subcarriers: For data transmission
— Pilot subcarriers: For various estimation purposes
— Null subcarriers: No transmission at all, for guard bands, nonactive subcarriers and the DC subcarrier.

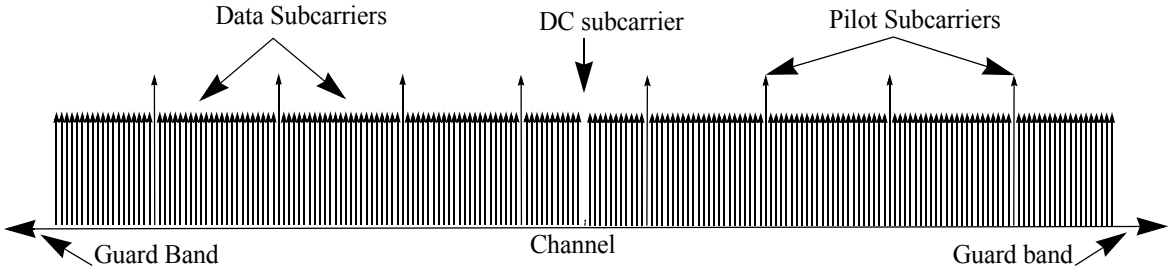

Figure 198—OFDM frequency description

NOTE—The example in Figure 198 shows the amplitude of the real (in-phase) component of an OFDM symbol with QPSK modulated data.

The purpose of the guard bands is to enable the signal to naturally decay and create the FFT "brick Wall" shaping. Subcarriers are nonactive only in the case of subchannelized transmission by an SS.

Subchannelized transmission in the UL is an option for an SS, and shall only be used if the BS signals its capability to decode such transmissions.

8.3.2 OFDM symbol parameters and transmitted signal

8.3.2.1 Primitive parameter definitions

The following four primitive parameters characterize the OFDM symbol:

— BW: This is the nominal channel bandwidth.
— N_{used}: Number of used subcarriers.
— n: Sampling factor. This parameter, in conjunction with BW and N_{used} determines the subcarrier spacing, and the useful symbol time. Required values of this parameter are specified in 8.3.2.4.
— G: This is the ratio of CP time to "useful" time. Required values of this parameter are specified in 8.3.2.4.

8.3.2.2 Derived parameter definitions

The following parameters are defined in terms of the primitive parameters of 8.3.2.1:

— N_{FFT} :Smallest power of two greater than N_{used}
— Sampling Frequency: $F_s = \text{floor}(n \cdot BW/8000) \times 8000$
— Subcarrier spacing: $\Delta f = F_s / N_{FFT}$
— Useful symbol time: $T_b = 1/\Delta f$
— CP Time: $T_g = G \cdot T_b$
— OFDM Symbol Time: $T_s = T_b + T_g$
— Sampling time: T_b / N_{FFT}

8.3.2.3 Transmitted signal

Equation (19) specifies the transmitted signal voltage to the antenna, as a function of time, during any OFDM symbol.

$$s(t) = \text{Re}\left\{ e^{j2\pi f_c t} \sum_{\substack{k = -N_{used}/2 \\ k \neq 0}}^{N_{used}/2} c_k \cdot e^{j2\pi k \Delta f (t - T_g)} \right\} \tag{19}$$

where

t is the time elapsed since the beginning of the subject OFDM symbol, with $0 < t < T_s$

c_k is a complex number; the data to be transmitted on the subcarrier whose frequency offset index is k, during the subject OFDM symbol. It specifies a point in a QAM constellation. In subchannelized transmissions, c_k is zero for all unallocated subcarriers.

8.3.2.4 Parameters of transmitted signal

The parameters of the transmitted OFDM signal, transmitted as in 8.3.2.3, are given in Table 248.

8.3.3 Channel coding

Channel coding is composed of three steps: randomizer, FEC, and interleaving. They shall be applied in this order at transmission. The complementary operations shall be applied in reverse order at reception.

Table 248—OFDM symbol parameters

Parameter	Value
N_{FFT}	256
N_{used}	200
n	For channel bandwidths that are a multiple of 1.75 MHz then n = 8/7 else for channel bandwidths that are a multiple of 1.5 MHz then n = 86/75 else for channel bandwidths that are a multiple of 1.25 MHz then n = 144/125 else for channel bandwidths that are a multiple of 2.75 MHz then n = 316/275 else for channel bandwidths that are a multiple of 2.0 MHz then n = 57/50 else for channel bandwidths not otherwise specified then n = 8/7
G	1/4, 1/8, 1/16, 1/32
Number of lower frequency guard subcarriers	28
Number of higher frequency guard subcarriers	27
Frequency offset indices of guard subcarriers	–128,–127...,–101 +101,+102,...,127
Frequency offset indices of pilot carriers	–88,–63,–38,–13,13,38,63,88
Subchannel Index: 0b10000: 0b01000: 0b00100: 0b00010: 0b00001: 0b00011: 0b00110: 0b00101: 0b00111: 0b01100: 0b01010: 0b01001: 0b01011: 0b01110: 0b01101: 0b01111: 0b11000: 0b10100: 0b10010: 0b10001: 0b10011: 0b10110: 0b10101: 0b10111: 0b11100: 0b11010: 0b11001: 0b11011: 0b11110: 0b11101: 0b11111:	Allocated Frequency offset indices of subcarriers: {–100:–98, –37:–35, 1:3, 64:66} {–38} { –97:–95, –34:–32, 4:6, 67:69} {–94:–92, –31:–29, 7:9, 70:72} {13} {–91:–89, –28:–26, 10:12, 73:75} {–87:–85, –50:–48, 14:16, 51:53} {–88} {–84:–82, –47:–45, 17: 19, 54:56} {–81:–79, –44:–42, 20:22, 57:59} {63} {–78:–76, –41:–39, 23:25, 60:62} {–75:–73, –12:–10, 26:28, 89:91} {–13} {–72:–70, –9: –7, 29:31, 92:94} {–69:–67, –6: –4, 32:34, 95:97} {38} {–66:–64, –3: –1, 35:37, 98:100} {–62:–60, –25:–23, 39:41, 76:78} {–63} {–59:–57, –22:–20, 42:44, 79:81} {–56:–54, –19:–17, 45:47, 82:84} {88} {–53:–51, –16:–14, 48:50, 85:87} Note that pilot subcarriers are allocated only if two or more subchannels are allocated.

8.3.3.1 Randomization

Data randomization is performed on each burst of data on the DL and UL. The randomization is performed on each allocation (DL or UL); in other words, for each allocation of a data block (subchannels on the frequency domain and OFDM symbols on the time domain), the randomizer shall be used independently. If the amount of data to transmit does not fit exactly the amount of data allocated, padding of 0xFF ("1" only) shall be added to the end of the transmission block for the unused integer bytes. For RS-CC- and CC-encoded data (see 8.3.3.2.1), padding will be added to the end of the transmission block, up to the amount of data allocated minus one byte, which shall be reserved for the introduction of a 0x00 tail byte by the FEC. For BTC (8.3.3.2.2) and CTC (8.3.3.2.3), if implemented, padding will be added to the end of the transmission block, up to the amount of data allocated.

The shift-register of the randomizer shall be initialized for each new allocation.

The PRBS generator shall be $1 + X^{14} + X^{15}$ as shown in Figure 199. Each data byte to be transmitted shall enter sequentially into the randomizer, MSB first. Preambles are not randomized. The seed value shall be used to calculate the randomization bits, which are combined in an XOR operation with the serialized bit stream of each burst. The randomizer sequence is applied only to information bits.

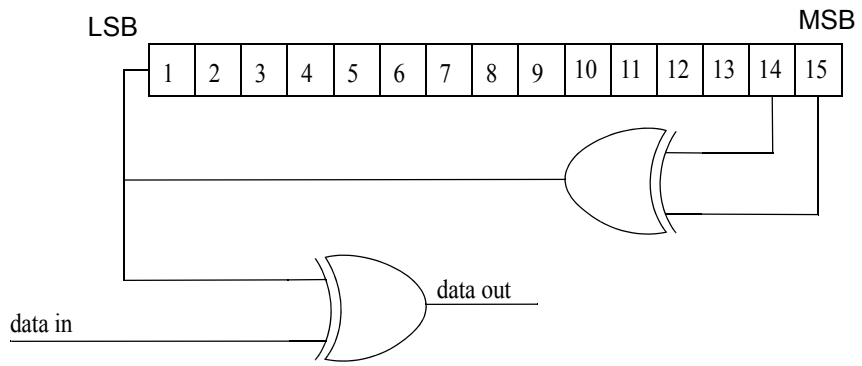

Figure 199—PRBS generator for data randomization

The bits issued from the randomizer shall be applied to the encoder.

On the DL, the randomizer shall be reinitialized at the start of each frame, and at the start of the STC zone only when a FCH-STC is present, with the sequence: 1 0 0 1 0 1 0 1 0 0 0 0 0 0 0. The randomizer shall not be reset at the start of the burst immediately following FCH or FCH-STC. At the start of subsequent bursts, the randomizer shall be initialized with the vector shown in Figure 200. The frame number used for initialization refers to the frame in which the DL burst is transmitted.

For a DL subchannelization zone (see 8.3.5.1.1), the randomizer is initialized in an equivalent manner. At the start of the DL subchannelized zone, the randomizer shall be reinitialized to the sequence 1 0 0 1 0 1 0 1 0 0 0 0 0 0 0 0. The randomizer shall not be reset at the start of the first burst in the CCH. At the start of subsequent bursts, the randomizer shall be initialized with the vector shown in Figure 200. The frame number used for initialization refers to the frame in which the subchannelized burst is transmitted and can be obtained from the SBCH_DLFP (see Table 262 in 8.3.5.1.1).

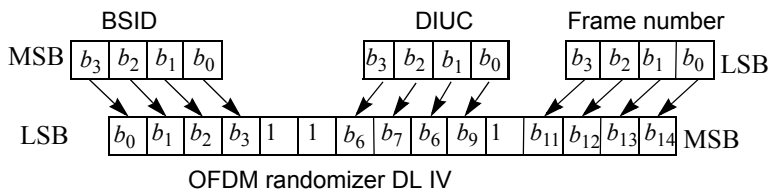

Figure 200—OFDM randomizer DL IV for burst #2...N

On the UL, the randomizer is initialized with the vector shown in Figure 201. The frame number used for initialization is that of the frame in which the UL map that specifies the UL burst was transmitted.

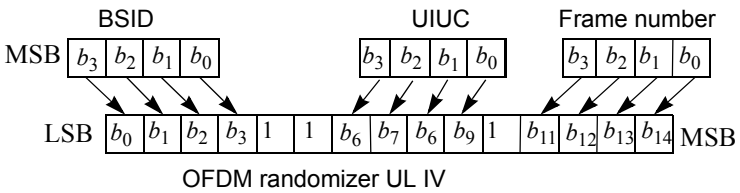

Figure 201—OFDM randomizer UL IV

8.3.3.2 FEC

An FEC, consisting of the concatenation of a Reed-Solomon outer code and a rate-compatible convolutional inner code, shall be supported on both UL and DL. Support of BTC and CTC is optional. The most robust burst profile shall always be used as the coding mode when requesting access to the network and in the FCH burst.

The encoding is performed by first passing the data in block format through the RS encoder and then passing it through a zero-terminating convolutional encoder.

8.3.3.2.1 Concatenated Reed-Solomon-convolutional code (RS-CC)

The Reed-Solomon encoding shall be derived from a systematic RS (N = 255, K = 239, T = 8) code using GF(2^8),

where

N is the number of overall bytes after encoding
K is the number of data bytes before encoding
T is the number of data bytes which can be corrected

The following polynomials [Equation (20) and Equation (21)] are used for the systematic code:

Code Generator Polynomial: $$x) = (x+\lambda^0)(x+\lambda^1)(x+\lambda^2)\ldots(x+\lambda^{2T-1}),\ \lambda = 02_H \quad (20)$$

Field Generator Polynomial: $$p(x) = x^8 + x^4 + x^3 + x^2 + 1 \quad (21)$$

This code is shortened and punctured to enable variable block sizes and variable error-correction capability. When a block is shortened to K' data bytes, add 239-K' zero bytes as a prefix. After encoding discard these 239-K' zero bytes. When a codeword is punctured to permit T' bytes to be corrected, only the first $2T'$ of the total 16 parity bytes shall be employed. The bit/byte conversion shall be MSB first.

Each RS block is encoded by the binary convolutional encoder, which shall have native rate of 1/2, a constraint length equal to 7, and shall use the generator polynomials codes shown in Equation (22) to derive its two code bits.

$$\begin{aligned} G_1 &= 171_{OCT} \qquad FOR\ \ X \\ G_2 &= 133_{OCT} \qquad FOR\ Y \end{aligned} \tag{22}$$

The generator is depicted in Figure 202.

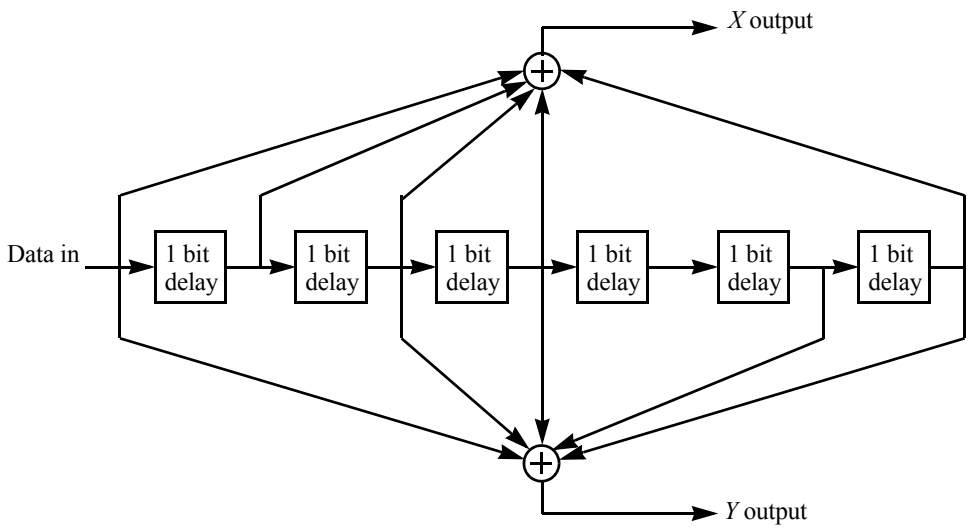

Figure 202—Convolutional encoder of rate 1/2

Puncturing patterns and serialization order that shall be used to realize different code rates are defined in Table 249. In the table, "1" means a transmitted bit and "0" denotes a removed bit, whereas *X* and *Y* are in reference to Figure 202.

Table 249—The inner convolutional code with puncturing configuration

	Code rates			
Rate	1/2	2/3	3/4	5/6
d_{free}	10	6	5	4
X	1	10	101	10101
Y	1	11	110	11010
XY	X_1Y_1	$X_1Y_1Y_2$	$X_1Y_1Y_2X_3$	$X_1Y_1Y_2X_3Y_4X_5$

The encoding is performed by first passing the data in block format through the RS encoder and then passing it through a convolutional encoder. A single 0x00 tail byte is appended to the end of each burst. This tail byte shall be appended after randomization. In the RS encoder, the redundant bits are sent before the input bits, keeping the 0x00 tail byte at the end of the allocation. To ensure that the number of bits after the convolutional encoder is divisible by N_{cbps}, as specified in Table 258 in 8.3.3.3, zero (0b0) pad bits are

added after the zero tail bits before the encoder. The zero pad bits are not randomized. Note that this situation can occur only in subchannelization. In this case, the RS encoding is not employed.

Table 250 gives the block sizes and the code rates used for the different modulations and code rates. As 64-QAM is optional for license-exempt bands, the codes for this modulation shall only be implemented if the modulation is implemented.

Table 250—Mandatory channel coding per modulation

Modulation	Uncoded block size (byte)	Coded block size (byte)	Overall coding rate	RS code	CC code rate
BPSK	12	24	1/2	(12,12,0)	1/2
QPSK	24	48	1/2	(32,24,4)	2/3
QPSK	36	48	3/4	(40,36,2)	5/6
16-QAM	48	96	1/2	(64,48,8)	2/3
16-QAM	72	96	3/4	(80,72,4)	5/6
64-QAM	96	144	2/3	(108,96,6)	3/4
64-QAM	108	144	3/4	(120,108,6)	5/6

When subchannelization is applied, the FEC shall bypass the RS encoder and use the Overall Coding Rate as indicated in Table 250 as CC Code Rate. The Uncoded Block Size and Coded Block size may be computed by multiplying the values listed in Table 250 by the number of allocated subchannels divided by 16.

In the case of BPSK modulation, the RS encoder should be bypassed.

8.3.3.2.2 Block turbo coding (BTC) (optional)

BTC is based on the product of two simple component codes, which are binary extended Hamming codes or parity check codes from the set depicted in Table 251.

Table 251—BTC component codes

Component code (*n*,*k*)	Code type
(64,57)	Extended Hamming code
(32,26)	Extended Hamming code
(16,11)	Extended Hamming code
(64,63)	Parity check code
(32,31)	Parity check code
(16,15)	Parity check code
(8,7)	Parity check code

Table 252 specifies the generator polynomials for the Hamming codes. To create extended Hamming codes, an overall even parity check bit is added at the end of each code word.

Table 252—OFDM Hamming code generator polynomials

n'	*k*'	Generator polynomial
7	4	X^3+X^1+1
15	11	X^4+X^1+1
31	26	X^5+X^2+1
63	57	X^6+X+1

The component codes are used in a two-dimensional matrix form, which is depicted in Figure 203. The k_x information bits in the rows are encoded into n_x bits, by using the component block (n_x, k_x) code specified for the respective composite code. After encoding the rows, the columns are encoded using a block code (n_y, k_y), where the check bits of the first code are also encoded. The overall block size of such a product code is $n = n_x \times n_y$, the total number of information bits $k = k_x \times k_y$ and the code rate is $R = R_x \times R_y$, where $R_i = k_i / n_i$, $i = x, y$. The Hamming distance of the product code is $d = d_x \times d_y$. Data bit ordering for the composite BTC matrix is defined so that the first bit in the first row is the LSB, and the last data bit in the last data row is the MSB.

Transmission of the block over the channel shall occur in a linear fashion, with all bits of the first row transmitted left to right followed by the second row, and so on.

To match a required packet size, BTCs may be shortened by removing symbols from the BTC array. In the two-dimensional case, rows, columns, or parts thereof can be removed until the appropriate size is reached. There are three steps in the process of shortening product codes:

Step 1) Remove I_x rows and I_y columns from the two-dimensional code. This is equivalent to shortening the constituent codes that make up the product code.

Step 2) Remove B individual bits from the first row of the two-dimensional code starting with the LSB.

Step 3) Use if the product code specified from Step 1) and Step 2) has a nonintegral number of data bytes. In this case, the Q leftover LSB are zero-filled by the encoder. After decoding at the receive end, the decoder shall strip off these unused bits and only the specified data payload is passed to the next higher level in the PHY.

The same process is used for shortening the last code word in a message where the available data bytes do not fill the available data bytes in a code block.

These three processes of code shortening are depicted in Figure 203. In the first two-dimensional BTC, a nonshortened product code is shown. By comparison, a shortened BTC is shown in the adjacent two-dimensional array. The new coded block length of the code is $(n_x - I_x)(n_y - I_y) - B$. The corresponding information length is given as $(k_x - I_x)(k_y - I_y) - B - Q$. Consequently, the code rate is given by Equation (23).

$$R = \frac{(k_x - I_x)(k_y - I_y) - B - Q}{(n_x - I_x)(n_y - I_y) - B} \tag{23}$$

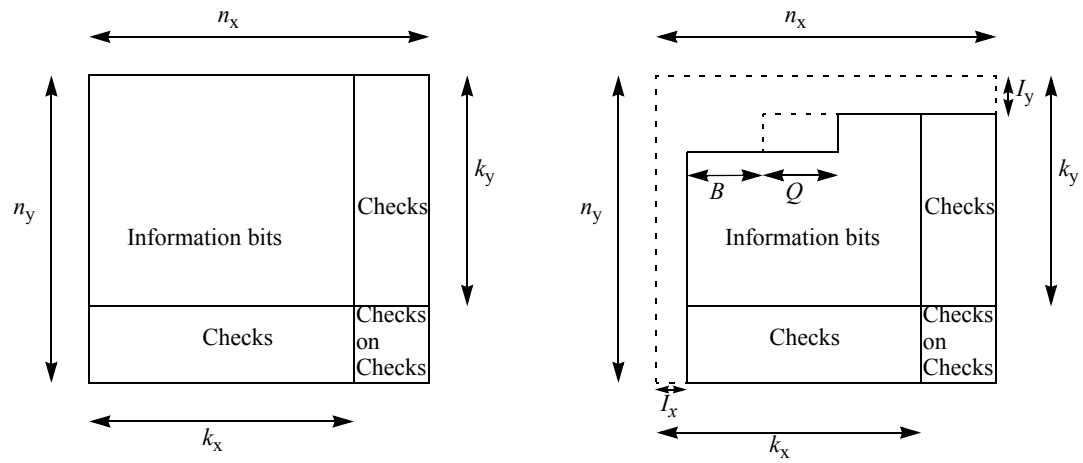

Figure 203—BTC and shortened BTC structure

Table 253 gives the block sizes, code rates, channel efficiency, and code parameters for the different modulation and coding schemes. As 64-QAM is optional for license-exempt bands, the codes for this modulation shall only be implemented if the modulation is implemented.

Table 253—Optional BTC channel coding per modulation

Modulation	Data block size (byte)	Coded block size (byte)	Overall code rate	Efficiency (bit/s/Hz)	Constituent codes (n_x, k_x)(n_y, k_y)	Code parameter
QPSK	23	48	~1/2	1.0	(32,26)(16,11)	I_x=4, I_y=2, B=8, Q=6
QPSK	35	48	~3/4	1.5	(32,26)(16,15)	I_x=0, I_y=4, B=0, Q=6
16-QAM	58	96	~3/5	2.4	(32,26)(32,26)	I_x=0, I_y=8, B=0, Q=4
16-QAM	77	96	~4/5	3.3	(64,57)(16,15)	I_x=7, I_y=2, B=30, Q=4
64-QAM	96	144	~2/3	3.8	(64,63)(32,26)	I_x=3, I_y=13, B=7, Q=5
64-QAM	120	144	~5/6	5.0	(32,31)(64,57)	I_x=13, I_y=3, B=7, Q=5

When subchannelization is used, the coding block size is limited to blocks at least 96 bits in length. The number of bits is calculated as shown in Equation (24).

$$\frac{N_{full}}{16} \cdot N_{Sub} \tag{24}$$

where

N_{full} is number of bits for 16-subchannel (full) mode
N_{Sub} is number of active subchannels (1–16)

Table 254 gives the block sizes, code rates, and code parameters for the case of subchannelization.

Table 254—Optional BTC channel coding with subchannelization

Coded bits	Approximate rate	Constituent code	Code parameter
96	1/2	(8,7), (32,26)	I_x=4, I_y=8, B=0, Q=6
	3/4	(16,15), (16,15)	I_x=6, I_y=6, B=4, Q=5
144	3/5	(16,15), (16,11)	I_x=7, I_y=0, B=0, Q=0
	5/6	(16,15), (16,15)	I_x=4, I_y=4, B=0, Q=1
192	3/8	(16,11), (16,11)	I_x=2, I_y=2, B=4, Q=5
	2/3	(8,7), (32,26)	I_x=2, I_y=0, B=0, Q=2
	5/6	(16,15), (16,15)	I_x=2, I_y=2, B=4, Q=5
288	1/2	(16,11), (32,26)	I_x=0, I_y=14, B=0, Q=4
	3/4	(16,15), (32,26)	I_x=7, I_y=0, B=0, Q=0
384	1/2	(16,11), (32,26)	I_x=0, I_y=8, B=0, Q=6
	3/4	(16,15), (32,26)	I_x=4, I_y=0, B=0, Q=6
576	1/2	(32,26), (32,26)	I_x=8, I_y=8, B=0, Q=4
	3/4	(16,15), (64,57)	I_x=7, I_y=0, B=0, Q=0
768	3/5	(32,26), (32,26)	I_x=4, I_y=4, B=16, Q=4
	4/5	(64,57), (16,15)	I_x=6, I_y=2, B=44, Q=3
1152	2/3	(64,57), (32,26)	I_x=28, I_y=0, B=0, Q=2
	5/6	(32,31), (64,57)	I_x=13, I_y=3, B=7, Q=5

8.3.3.2.3 Convolutional turbo codes (CTC) (optional)

8.3.3.2.3.1 CTC encoder

The CTC encoder, including its constituent encoder, is depicted in Figure 204. It uses a double binary Circular Recursive Systematic Convolutional code. The bits of the data to be encoded are alternately fed to *A* and *B,* starting with the MSB of the first byte being fed to *A*. The encoder is fed by blocks of *k* bits or *N* couples ($k = 2 \times N$ bits). For all the frame sizes, *k* is a multiple of 8 and *N* is a multiple of 4. *N* shall be limited to: $8 \le N/4 \le 1024$. For subchannelization mode, the coding block size is limited to blocks at least 48 bits in length, and no more than 1024 bits in length. In addition, *k* cannot be a multiple of 7.

The polynomials defining the connections are described in octal and symbol notations as follows:

— For the feedback branch: 0xB, equivalently $1 + D + D^3$ (in symbolic notation)
— For the *Y* parity bit: 0xD, equivalently $1 + D^2 + D^3$

First, the encoder (after initialization by the circulation state Sc_1, see 8.3.3.2.3.3) is fed the sequence in the natural order (position 1) with the incremental address $i = 0 .. N–1$. This first encoding is called C_1 encoding. Then the encoder (after initialization by the circulation state Sc_2, see 8.3.3.2.3.3) is fed by the interleaved sequence (switch in position 2) with incremental address $j = 0, \ldots N–1$. This second encoding is called C_2 encoding.

The order that the encoded bit shall be fed into the interleaver (8.3.3.3) is as follows:

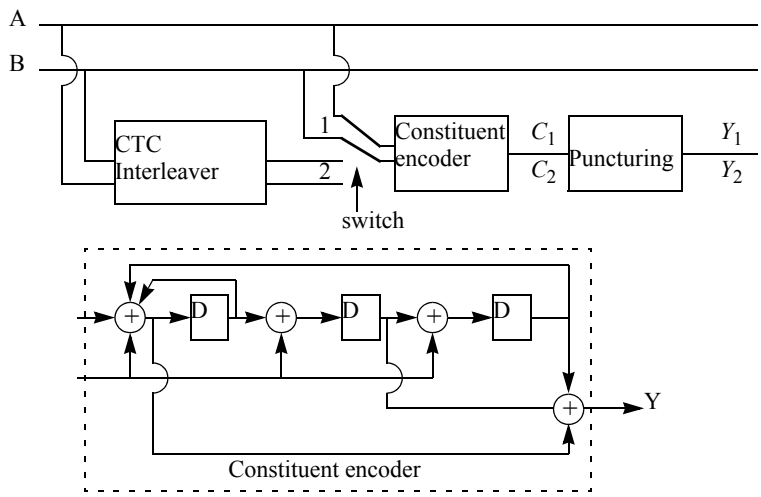

Figure 204—CTC encoder

$$A_0, B_0 .. A_{N-1}, B_{N-1}, Y_{10}, Y_{1,1} .. Y_{1,M}, Y_{20}, Y_{2,1} .. Y_{2,M}$$

where M is the number of parity bits.

Table 255 gives the block sizes, code rates, channel efficiency, and code parameters for the different modulation and coding schemes. As 64-QAM is optional for license-exempt bands, the codes for this modulation shall only be implemented if the modulation is implemented.

Table 255—Optional CTC channel coding per modulation

Modulation	N	Overall code rate	P_0
QPSK	$6\times N_{sub}$	1/2	7
QPSK	$8\times N_{sub}$	2/3	11
QPSK	$9\times N_{sub}$	3/4	17
16-QAM	$12\times N_{sub}$	1/2	11
16-QAM	$18\times N_{sub}$	3/4	13
64-QAM	$24\times N_{sub}$	2/3	17
64-QAM	$27\times N_{sub}$	3/4	17

In Table 255, N_{sub} denotes the number of subchannels of the allocation in which the encoded data will be transmitted. The data block size (in bytes per OFDM symbol) may be calculated as $N/4$. Further, P_1 equals $3N/4$.

8.3.3.2.3.2 CTC interleaver

The interleaver requires the parameters P_0, shown in Table 255.

The two-step interleaver shall be performed as follows:

Step 1: Switch alternate couples.
for $j = 1 \ldots N$
if ($j_{mod_2} == 0$) let $(B,A) = (A,B)$ (i.e., switch the couple)
Step 2: $P_i(j)$.
The function $P_i(j)$ provides the interleaved address i of the consider couple j.
for $j = 1 \ldots N$
switch j_{mod_4} :
case 0 or 1: $i = (P_0 \cdot j + 1)_{mod_N}$
case 2: $i = (P_0 \cdot j + 1 + N/4)_{mod_N}$
case 3: $i = (P_0 \cdot j + 1 + N/2 + P_1)_{mod_N}$

8.3.3.2.3.3 Determination of CTC circulation states

The state of the encoder is denoted S ($0 \le S == 7$) with S the value read binary (left to right) out of the constituent encoder memory (see Figure 204). The circulation states S_{c1} and S_{c2} are determined by the following operations:

Step 1) Initialize the encoder with state 0. Encode the sequence in the natural order for the determination of S_{c1} or in the interleaved order for determination of S_{c2}. In both cases, the final state of the encoder is S_{0N-1}.
Step 2) According to the length N of the sequence, use Table 256 to find S_{c1} or S_{c2}.

Table 256—Circulation state lookup table (S_c)

N_{mod_7}	S_{0N-1}							
	0	**1**	**2**	**3**	**4**	**5**	**6**	**7**
1	0	6	4	2	7	1	3	5
2	0	3	7	4	5	6	2	1
3	0	5	3	6	2	7	1	4
4	0	4	1	5	6	2	7	3
5	0	2	5	7	1	3	4	6
6	0	7	6	1	3	4	5	2

8.3.3.2.3.4 CTC puncturing

The three code rates are achieved through selectively deleting the parity bits (puncturing). The puncturing patterns are identical for both codes C_1 and C_2. See Table 257.

8.3.3.3 Interleaving

All encoded data bits shall be interleaved by a block interleaver with a block size corresponding to the number of coded bits per the allocated subchannels per OFDM symbol, N_{cbps}. The interleaver is defined by a two step permutation. The first ensures that adjacent coded bits are mapped onto nonadjacent subcarriers. The second permutation insures that adjacent coded bits are mapped alternately onto less or more significant bits of the constellation, thus avoiding long runs of lowly reliable bits.

Table 257—CTC puncturing (S_c)

Rate $R_n/(R_n+1)$	Y					
	0	**1**	**2**	**3**	**4**	**5**
1/2	1	1				
2/3	1	0	1	0		
3/4	1	0	0	1	0	0

Let N_{cpc} be the number of coded bits per subcarrier, i.e., 1, 2, 4 or 6 for BPSK, QPSK, 16-QAM, or 64-QAM, respectively. Let $s = ceil(N_{\text{cpc}}/2)$. Within a block of N_{cbps} bits at transmission, let k be the index of the coded bit before the first permutation; m_k be the index of that coded bit after the first and before the second permutation; and let j_k be the index after the second permutation, just prior to modulation mapping.

The first permutation is defined by Equation (25).

$$m_k = (N_{cbps}/12) \cdot k_{mod12} + floor(k/12) \qquad k = 0, 1, \ldots, N_{\text{cbps}} - 1 \tag{25}$$

The second permutation is defined by Equation (26).

$$j_k = s \cdot floor(m_k/s) + (m_k + N_{\text{cbps}} - floor(12 \cdot m_k/N_{\text{cbps}}))_{mod(s)} \qquad k = 0, 1, \ldots, N_{\text{cbps}} - 1 \tag{26}$$

The de-interleaver, which performs the inverse operation, is also defined by two permutations. Within a received block of N_{cbps} bits, let j be the index of a received bit before the first permutation; m_j be the index of that bit after the first and before the second permutation; and let k_j be the index of that bit after the second permutation, just prior to delivering the block to the decoder.

The first permutation is defined by Equation (27).

$$m_j = s \cdot floor(j/s) + (j + floor(12 \cdot j/N_{\text{cbps}}))_{mod(s)} \qquad j = 0, 1, \ldots, N_{\text{cbps}} - 1 \tag{27}$$

The second permutation is defined by Equation (28).

$$k_j = 12 \cdot m_j - (N_{\text{cbps}} - 1) \cdot floor(12 \cdot m_j/N_{\text{cbps}}) \qquad j = 0, 1, \ldots, N_{\text{cbps}} - 1 \tag{28}$$

The first permutation in the de-interleaver is the inverse of the second permutation in the interleaver, and conversely.

Table 258 shows the bit interleaver sizes as a function of modulation and coding.

The first bit out of the interleaver shall map to the MSB in the constellation.

8.3.3.4 Modulation

8.3.3.4.1 Data modulation

After bit interleaving, the data bits are entered serially to the constellation mapper. BPSK, Gray-mapped QPSK, 16-QAM, and 64-QAM as shown in Figure 205 shall be supported, whereas the support of 64-QAM is optional for license-exempt bands. The constellations (as shown in Figure 205) shall be normalized by

Table 258—Block sizes of the Bit Interleaver

	Default (16 subchannels)	8 subchannels	4 subchannels	2 subchannels	1 subchannel
	N_{cbps}				
BPSK	192	96	48	24	12
QPSK	384	192	96	48	24
16-QAM	768	384	192	96	48
64-QAM	1152	576	288	144	72

multiplying the constellation point with the indicated factor c to achieve equal average power. For each modulation, b_0 denotes the LSB.

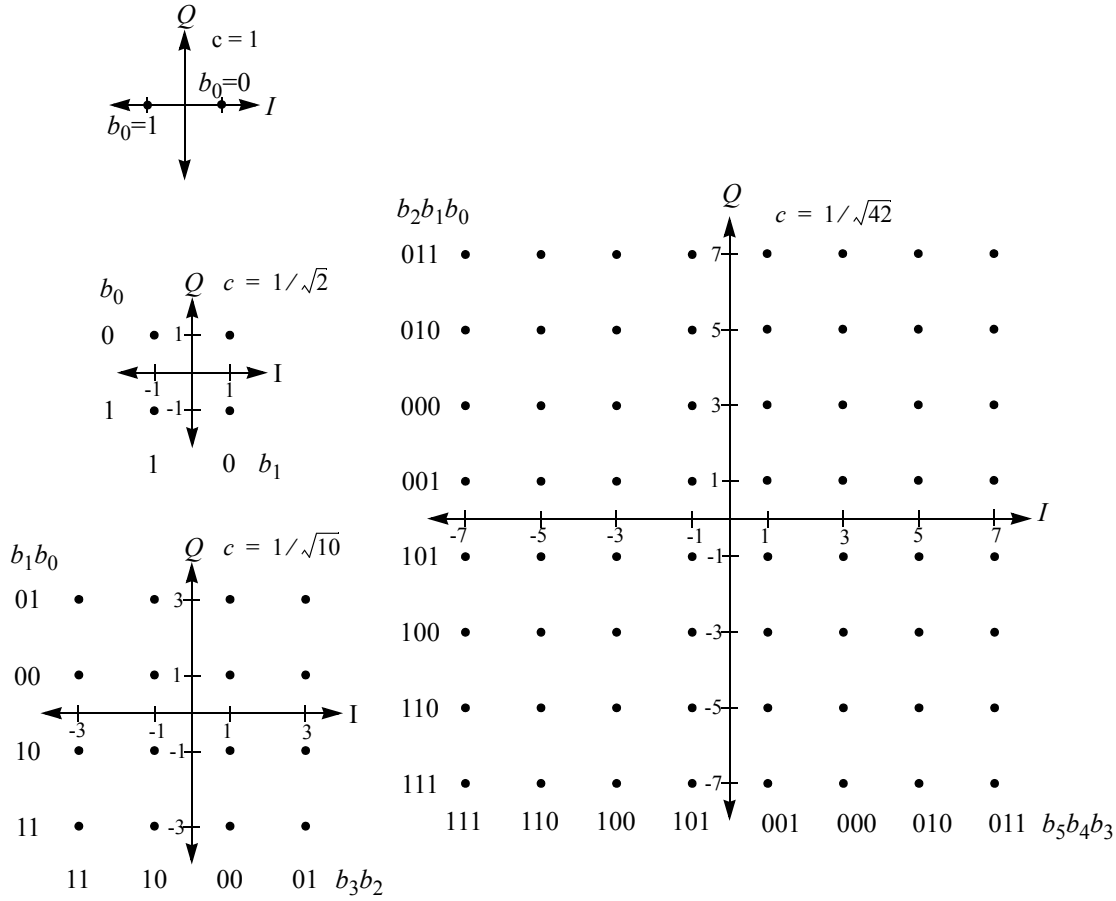

Figure 205—BPSK, QPSK, 16-QAM, and 64-QAM constellations

Per-allocation adaptive modulation and coding shall be supported in the DL. The UL shall support different modulation schemes for each SS based on the MAC burst configuration messages coming from the BS. Complete description of the MAC/PHY support of adaptive modulation and coding is provided in 6.3.7.

The constellation-mapped data shall be subsequently modulated onto all allocated data subcarriers in order of increasing frequency offset index. The first symbol out of the data constellation mapping shall be modulated onto the allocated subcarrier with the lowest frequency offset index.

8.3.3.4.2 Pilot modulation

Pilot subcarriers shall be inserted into each data burst in order to constitute the Symbol and they shall be modulated according to their carrier location within the OFDM symbol. The PRBS generator depicted hereafter shall be used to produce a sequence, w_k. The polynomial for the PRBS generator shall be $X^{11} + X^9 + 1$. See Figure 206.

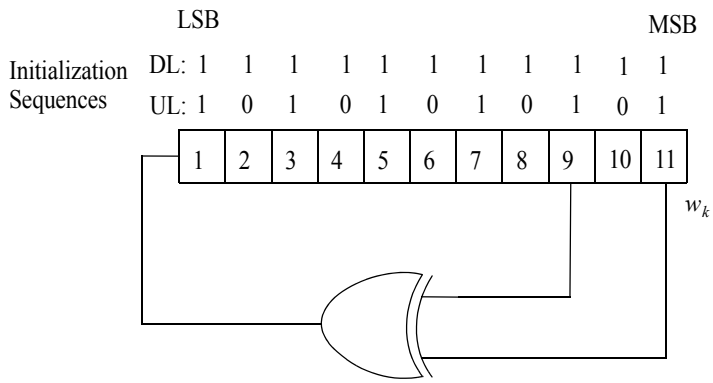

Figure 206—PRBS generator for pilot modulation

The value of the pilot modulation for OFDM symbol k is derived from w_k. On the DL, the index k represents the symbol index relative to the beginning of the DL subframe. For bursts contained in the STC zone when the FCH-STC is present, index k represents the symbol index relative to the beginning of the STC zone. In the DL subchannelization zone, the index k represents the symbol index relative to the beginning of the burst. On the UL, the index k represents the symbol index relative to the beginning of the burst. On both UL and DL, the first symbol of the preamble is denoted by $k = 0$. The initialization sequences that shall be used on the DL and UL are shown in Figure 206. On the DL, this shall result in the sequence 11111111111000000000110... where the third 1, i.e., $w_2 = 1$, shall be used in the first OFDM DL symbol following the frame preamble. For each pilot (indicated by frequency offset index), the BPSK modulation shall be derived as shown in Equation (29) and Equation (30).

$$\text{DL:}\quad c_{-88} = c_{-38} = c_{63} = c_{88} = 1 - 2w_k \quad \text{and} \quad c_{-63} = c_{-13} = c_{13} = c_{38} = 1 - 2\overline{w_k} \tag{29}$$

$$\text{UL:}\quad c_{-88} = c_{-38} = c_{13} = c_{38} = c_{63} = c_{88} = 1 - 2w_k \quad \text{and} \quad c_{-63} = c_{-13} = 1 - 2\overline{w_k} \tag{30}$$

8.3.3.4.3 Rate ID encodings

Rate_IDs, which indicate modulation and coding to be used in the first DL burst immediately following the FCH, are shown in Table 259. The Rate_ID encoding is static and cannot be changed during system operation.

8.3.3.5 Example OFDM UL RS-CC encoding

To illustrate the use of the RS-CC encoding, three examples are provided, each of one burst of OFDM UL data, illustrating each process from randomization through subcarrier modulation.

Table 259—OFDM Rate ID encodings

Rate_ID	Modulation RS-CC rate
0	BPSK-1/2
1	QPSK-1/2
2	QPSK-3/4
3	16-QAM-1/2
4	16-QAM-3/4
5	64-QAM-2/3
6	64-QAM-3/4
7–15	*Reserved*

8.3.3.5.1 Full bandwidth (16 subchannels)

Modulation mode: QPSK, rate 3/4, Symbol Number within burst: 1, UIUC: 7, BSID: 1, Frame Number 1 (decimal values)

Input data (Hex)

45 29 C4 79 AD 0F 55 28 AD 87 B5 76 1A 9C 80 50 45 1B 9F D9 2A 88 95 EB AE B5 2E 03 4F 09 14 69 58 0A 5D

Randomized data (Hex)

D4 BA A1 12 F2 74 96 30 27 D4 88 9C 96 E3 A9 52 B3 15 AB FD 92 53 07 32 C0 62 48 F0 19 22 E0 91 62 1A C1

Reed-Solomon-encoded data (Hex)

49 31 40 BF D4 BA A1 12 F2 74 96 30 27 D4 88 9C 96 E3 A9 52 B3 15 AB FD 92 53 07 32 C0 62 48 F0 19 22 E0 91 62 1A C1 00

Convolutionally encoded data (Hex)

3A 5E E7 AE 49 9E 6F 1C 6F C1 28 BC BD AB 57 CD BC CD E3 A7 92 CA 92 C2 4D BC 8D 78 32 FB BF DF 23 ED 8A 94 16 27 A5 65 CF 7D 16 7A 45 B8 09 CC

Interleaved data (Hex)

77 FA 4F 17 4E 3E E6 70 E8 CD 3F 76 90 C4 2C DB F9 B7 FB 43 6C F1 9A BD ED 0A 1C D8 1B EC 9B 30 15 BA DA 31 F5 50 49 7D 56 ED B4 88 CC 72 FC 5C

Subcarrier mapping (frequency offset index: *I* value *Q* value)

-100: 1 -1, -99: -1 -1, -98: 1 -1, -97: -1 -1, -96: -1 -1, -95: -1 -1, -94: -1 1, -93: -1 1, -92: 1 -1, -91: 1 1, -90: -1 -1, -89: -1 -1, -88:pilot= 1 0, -87: 1 1, -86: 1 -1, -85: 1 -1, -84: -1 -1, -83: 1 -1, -82: 1 1, -81: -1 -1, -80: -1 1, -79: 1 1, -78: -1 -1, -77: -1 -1, -76: -1 1, -75: -1 -1, -74: -1 1, -73: 1 -1, -72: -1 1, -71: 1 -1, -70: -1 -1, -69: 1 1, -68: 1 1, -67: -1 -1, -66: -1 1, -65: -1 1, -64: 1 1, -63:pilot= -1 0, -62: -1 -1,

-61: 1 1, -60: -1 -1, -59: 1 -1, -58: 1 1, -57: -1 -1, -56: -1 -1, -55: -1 -1, -54: 1 -1, -53: -1 -1, -52: 1 -1, -51: -1 1, -50: -1 1, -49: 1 -1, -48: 1 1, -47: 1 1, -46: -1 -1, -45: 1 1, -44: 1 -1, -43: 1 1, -42: 1 1, -41: -1 1, -40: -1 -1, -39: 1 1, -38:pilot= 1 0, -37: -1 -1, -36: 1 -1, -35: -1 1, -34: -1 -1, -33: -1 -1, -32: -1 -1, -31: -1 1, -30: 1 -1, -29: -1 1, -28: -1 -1, -27: 1 -1, -26: -1 -1, -25: -1 -1, -24: -1 -1, -23: -1 1, -22: -1 -1, -21: 1 -1, -20: 1 1, -19: 1 1, -18: -1 -1, -17: 1 -1, -16: -1 1, -15: -1 -1, -14: 1 1, -13:pilot= -1 0, -12: -1 -1, -11: -1 -1, -10: 1 1, -9: 1 -1, -8: -1 1, -7: 1 -1, -6: -1 1, -5: -1 1, -4: -1 1, -3: -1 -1, -2: -1 -1, -1: 1 -1, 0: 0 0, 1: -1 -1, 2: -1 1, 3: -1 -1, 4: 1 -1, 5: 1 1, 6: 1 1, 7: -1 1, 8: -1 1, 9: 1 1, 10: 1 -1, 11: -1 -1, 12: 1 1, 13:pilot= 1 0, 14: -1 -1, 15: 1 -1, 16: -1 1, 17: 1 1, 18: 1 1, 19: 1 -1, 20: -1 1, 21: -1 -1, 22: -1 -1, 23: -1 1, 24: -1 -1, 25: 1 1, 26: -1 1, 27: 1 -1, 28: -1 1, 29: -1 -1, 30: 1 1, 31: -1 -1, 32: 1 1, 33: 1 1, 34: 1 1, 35: 1 -1, 36: 1 -1, 37: 1 -1, 38:pilot= 1 0, 39: -1 1, 40: -1 -1, 41: -1 1, 42: -1 1, 43: -1 -1, 44: 1 -1, 45: -1 1, 46: -1 1, 47: 1 1, 48: -1 -1, 49: 1 1, 50: 1 -1, 51: -1 -1, 52: -1 -1, 53: 1 -1, 54: 1 -1, 55: 1 -1, 56: 1 -1, 57: 1 1, 58: 1 1, 59: 1 -1, 60: 1 1, 61: -1 1, 62: 1 -1, 63:pilot= 1 0, 64: 1 -1, 65: -1 -1, 66: -1 -1, 67: 1 -1, 68: 1 -1, 69: 1 -1, 70: 1 -1, 71: -1 1, 72: -1 -1, 73: -1 1, 74: -1 -1, 75: 1 -1, 76: -1 1, 77: -1 -1, 78: 1 -1, 79: 1 1, 80: -1 1, 81: 1 1, 82: -1 1, 83: 1 1, 84: -1 -1, 85: 1 1, 86: -1 -1, 87: 1 1, 88:pilot= 1 0, 89: 1 -1, 90: -1 -1, 91: 1 1, 92: -1 1, 93: -1 -1, 94: -1 -1, 95: -1 -1, 96: 1 1, 97: 1 -1, 98: 1 -1, 99: -1 -1, 100: 1 1

Note that the above QPSK values (all values with exception of the BPSK pilots) are to be normalized with a factor $1/\sqrt{2}$ as indicated in Figure 205.

8.3.3.5.2 Subchannelization (2 subchannels)

Modulation mode: 16-QAM, rate 3/4, Symbol Numbers within burst: 1–3, UIUC: 7, BSID: 1, Frame Number: 1, subchannel index: 0b00010 (decimal values)

Input data (Hex)

45 29 C4 79 AD 0F 55 28 AD 87 B5 76 1A 9C 80 50 45 1B 9F D9 2A 88 95 EB AE B5

Randomized data (Hex)

D4 BA A1 12 F2 74 96 30 27 D4 88 9C 96 E3 A9 52 B3 15 AB FD 92 53 07 32 C0 62 00

Convolutionally encoded data (Hex)

EE C6 A1 CB 7E 04 73 6C BC 61 95 D3 B7 C4 EF 0E 4C 76 CF DC 70 69 B3 CE DB E0 E5 B7 B5 4E 88 7D A4 AE 31 30

Interleaved data (Hex)

B4 FF DA 06 E5 42 EC 1F 86 7C 29 93 9C AD 83 42 6B FE FC 6D CB F6 53 85 AE 68 22 7A CE B1 E7 52 B0 EC BA 95

Subcarrier mapping (frequency offset index: *I* value *Q* value)

1st data symbol:

-100: -1 -3, -99: 3 1, -98: -3 -3, -97: -3 -3, -96: -3 3, -95: -1 -1, -38: pilot = 1 0, -37: 1 1, -36: 3 -1, -35: -3 -1, -34: 3 3, -33: 3 1, -32: 1 -1, 1: -3 -1, 2: -3 1, 3: 1 3, 4: -3 -3, 5: -1 1, 6: 3 -1, 64: 3 -3, 65: -3 1, 66: 1 -1, 67: -1 3, 68: -1 3, 69: 1 -3

2nd data symbol:

-100: -1 3, -99: -3 1, -98: -1 -1, -97: -3 3, -96: -1 1, -95: 1 -3, -38: pilot = -1 0, -37: 3 1, -36: 1 -1, -35: 3 -1, -34: -1 -3, -33: -3 -3, -32: -3 -1, 1: -3 -3, 2: -3 1, 3: 3 -1, 4: -3 3, 5: -3 1, 6: -1 -3, 64: -3 -3, 65: 3 -1, 66: 3 3, 67: 1 -3, 68: -1 1, 69: 3 3

3rd data symbol:

-100: -1 -1, -99: -3 -1, -98: 3 -1, -97: -1 1, -96: 1 -1, -95: 1 -1, -38: pilot = 1 0, -37: 3 -3, -36: -1 -1, -35: -3 1, -34: -3 -1, -33: -1 -3, -32:1 3, 1: -3 -1, 2: 3 -3, 3: 3 3, 4: 1 -1, 5: -1 -3, 6: 1 1, 64: -3 -1, 65: -3 1, 66: -1 -3, 67: -1 -1, 68: -1 3, 69: 3 3

Note that the above 16-QAM values (all values with exception of the BPSK pilots) are to be normalized with a factor $1/\sqrt{10}$ as indicated in Figure 205.

8.3.3.5.3 Subchannelization (1 subchannel)

Modulation mode: QPSK, rate 3/4, Symbol Numbers within burst: 1-5, UIUC: 7, BSID: 1, Frame Number: 1, subchannel index: 0b00001 (decimal values)

Input data (Hex)

45 29 C4 79 AD 0F 55 28 AD 87

Randomized data (Hex)

D4 BA A1 12 F2 74 96 30 27 D4 00 00

NOTE—The last hex value represents 2 bits only.

Convolutionally encoded data (Hex)

EE C6 A1 CB 7E 04 73 6C BC 61 95 D3 B7 DF 00

Interleaved data (Hex)

BC EC A1 F4 8A 3A 7A 4F 78 39 53 87 DF 2A A2

Subcarrier mapping (frequency offset index: *I* value *Q* value)

1st data symbol:
-100: -1 1, -99: -1 -1, -98: -1 -1, -37: 1 1, -36: -1 -1, -35: -1 1, 1: -1 -1, 2: 1 1, 3: -1 1, 64: -1 1, 65: 1 1, 66: 1 -1

2nd data symbol:
-100: -1 -1, -99: -1 -1, -98: 1 -1, -37: 1 1, -36: -1 1, -35: 1 1, 1: -1 1, 2: -1 1, 3: 1 1, 64: -1 -1, 65: -1 1, 66: -1 1

3rd data symbol:
-100: 1 -1, -99: -1 -1, -98: -1 1, -37: -1 1, -36: 1 -1, -35: 1 1, 1: -1 -1, 2: -1 -1, 3: 1 -1, 64: -1 -1, 65: -1 1, 66: 1 1

4th data symbol:
-100: 1 1, -99: -1 -1, -98: -1 1, -37: 1 -1, -36: 1 -1, -35: 1 -1, 1: 1 1, 2: -1 -1, 3: -1 1, 64: 1 1, 65: 1 -1, 66: -1 -1

5th data symbol:
-100: -1 -1, -99: 1 -1, -98: -1 -1, -37: -1 -1, -36: 1 1, -35: -1 1, 1: -1 1, 2: -1 1, 3: -1 1, 64: -1 1, 65: 1 1, 66: -1 1

Note that the above QPSK values are to be normalized with a factor $1/\sqrt{2}$ as indicated in Figure 205.

8.3.3.6 Preamble structure and modulation

All preambles are structured as either one or two OFDM symbols. The OFDM symbols are defined by the values of the composing subcarriers. Each of those OFDM symbols contains a cyclic prefix. The length of the cyclic prefix is the same as the CP for data OFDM symbols.

The first preamble in the DL PHY PDU, as well as the initial ranging preamble, consists of two consecutive OFDM symbols. The first OFDM symbol uses only subcarriers the indices of which are a multiple of 4. As a result, the time domain waveform of the first symbol consists of four repetitions of 64-sample fragment, preceded by a CP. The second OFDM symbol utilizes only even subcarriers, resulting in time domain structure composed of two repetitions of a 128-sample fragment, preceded by a CP. The time domain structure is exemplified in Figure 207. This combination of the two OFDM symbols is referred to as the long preamble.

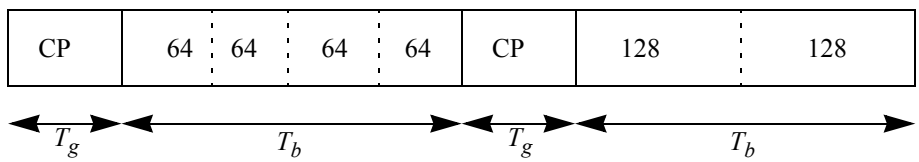

Figure 207—DL and network entry preamble structure

The frequency domain sequences for all full-bandwidth preambles are derived from the sequence in Equation (31).

P_{ALL}(-100:100) = {1-j, 1-j, -1-j, 1+j, 1-j, 1-j, -1+j, 1-j, 1-j, 1-j, 1+j, -1-j, 1+j, 1+j, -1-j, 1+j, -1-j, -1-j, 1-j, -1+j, 1-j, 1-j, -1-j, 1+j, 1-j, 1-j, -1+j, 1-j, 1-j, 1-j, 1+j, -1-j, 1+j, 1+j, -1-j, 1+j, -1-j, -1-j, 1-j, -1+j, 1-j, 1-j, -1-j, 1+j, 1-j, 1-j, -1+j, 1-j, 1-j, 1-j, 1+j, -1-j, 1+j, 1+j, -1-j, 1+j, -1-j, -1-j, 1-j, 1-j, -1+j, 1+j, 1+j, 1-j, -1+j, 1+j, 1+j, -1-j, 1+j, 1+j, 1+j, -1+j, 1-j, -1+j, -1+j, 1-j, -1+j, 1-j, 1-j, -1-j, 1+j, -1-j, -1-j, -1-j, -1+j, 1-j, -1-j, -1-j, 1+j, -1-j, -1-j, -1-j, 1-j, -1+j, 1-j, 1-j, -1+j, 1-j, -1+j, -1+j, -1-j, 1+j, 0, -1-j, 1+j, -1+j, -1+j, -1-j, 1+j, 1+j, 1+j, -1-j, 1+j, 1-j, 1-j, 1-j, -1+j, -1+j, -1+j, -1+j, 1-j, -1-j, -1-j, -1+j, 1-j, 1+j, 1+j, -1+j, 1-j, 1-j, 1-j, -1+j, 1-j, -1-j, -1-j, -1-j, 1+j, 1+j, 1+j, 1+j, -1-j, -1+j, -1+j, 1+j, -1-j, 1-j, 1-j, 1+j, -1-j, -1-j, -1-j, 1+j, -1-j, -1+j, -1+j, -1+j, 1-j, 1-j, 1-j, 1-j, -1+j, 1+j, 1+j, -1-j, 1+j, -1+j, -1+j, -1-j, 1+j, 1+j, 1+j, -1-j, 1+j, 1-j, 1-j, 1-j, -1+j, -1+j, -1+j, -1+j, 1-j, -1-j, -1-j, 1-j, -1+j, -1-j, -1-j, 1-j, -1+j, -1+j, -1+j, 1-j, -1+j, 1+j, 1+j, 1+j, -1-j, -1-j, -1-j, -1-j, 1+j, 1-j, 1-j} (31)

The frequency domain sequence for the 4 times 64 sequence P_{4x64} is defined by Equation (32).

$$P_{4x64(k)} = \begin{cases} \sqrt{2} \cdot \sqrt{2} \cdot conj(P_{ALL}(k)) & k_{mod4} = 0 \\ 0 & k_{mod4} \neq 0 \end{cases} \tag{32}$$

In Equation (32), the factor of $\sqrt{2}$ equates the Root-Mean-Square (RMS) power with that of the data section. The additional factor of $\sqrt{2}$ is related to the 3 dB boost.

The frequency domain sequence for the 2 times 128 sequence P_{EVEN} is defined by Equation (33).

$$P_{EVEN(k)} = \begin{cases} \sqrt{2} \cdot P_{ALL}(k) & k_{mod2} = 0 \\ 0 & k_{mod2} \neq 0 \end{cases} \tag{33}$$

In P_{EVEN}, the factor of $\sqrt{2}$ is related to the 3 dB boost.

In the UL, when the entire 16 subchannels are used, the data preamble, as shown in Figure 208 consists of one OFDM symbol utilizing only even subcarriers. The time domain waveform consists of 2 times 128 samples preceded by a CP. The subcarrier values shall be set according to the sequence P_{EVEN}. This preamble is referred to as the short preamble. This preamble shall be used as burst preamble on the DL bursts when indicated in the DL-MAP IE.

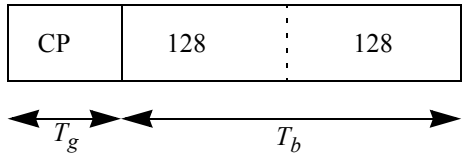

Figure 208—P_{EVEN} time domain structure

In the DL bursts, which start with a preamble and which fall within the STC-encoded region, the preamble shall be transmitted from both Tx antennas simultaneously and shall consist of a single OFDM symbol. The preamble transmitted from the first antenna shall use only even subcarriers, the values of which are set according to the sequence P_{EVEN}. The preamble transmitted from the second antenna shall use only odd subcarriers, the values of which shall be set according to the sequence P_{ODD}. See Equation (34).

$$P_{ODD(k)} = \begin{cases} 0 & k_{mod2} = 0 \\ \sqrt{2} \cdot P_{ALL}(k) & k_{mod2} \neq 0 \end{cases} \tag{34}$$

The AAS preamble shall be composed of two identical OFDM symbols. Each symbol shall be transmitted from up to four beams. The same beams shall be used in the first and second symbols. This preamble shall be used to mark AAS DL zone slots and to perform channel estimation. If the BS supports more than four antennas, the subset that is transmitted on a single AAS preamble may be varied from frame to frame. The preamble from beam m, m = 0…3, shall be transmitted on subcarriers m mod 4 and shall use the sequence $P_{AAS}^{(m)}$ given by Equation (35) and Equation (36).

For $m = 0$

$$P_{AAS}^{(m)}(k) = \begin{cases} 0 & k \bmod 4 \neq 0 \\ conj\{P_{ALL}(k)\} & k \bmod 4 = 0 \end{cases} \tag{35}$$

For $m = 1…3$

$$P_{AAS}^{(m)}(k) = \begin{cases} 0 & k \bmod 4 \neq m \\ conj\{P_{ALL}(k+2-m)\} & k \bmod 4 = m \end{cases} \tag{36}$$

In the UL, when subchannelization transmissions are employed, the data preamble consists of a 256 sample sequence preceded by a CP whose length is the same as the cyclic prefix for data OFDM symbols. This preamble is referred to as the subchannelization preamble. The frequency domain sequence for the 256 samples is defined by P_{SUB}. Preamble subcarriers that do not fall within the allocated subchannels shall be set to zero.

P_{SUB}(-100:100) = {1+j, 1+j, -1-j, 1+j, -1+j, 1+j, 1+j, 1+j, -1-j, -1-j, 1-j, -1-j, 1-j, 1+j, 1-j, 1+j, 1+j, -1-j, -1-j, 1+j, 1-j, 1+j, -1-j, 1+j, 1+j, 1+j, 1+j, -1-j, 1+j, -1+j, 1+j, 1+j, 1+j, -1-j, -1-j, 1-j, -1-j, -1-j, 1+j, 1-j, 1+j, 1+j, -1-j, -1-j, 1+j, 1-j, 1+j, -1-j, 1+j, 1+j, 1+j, 1+j, -1-j, 1+j, -1+j, 1+j, 1+j, 1+j, -1-j, -1-j, 1-j, -1-j, 1-j, -1-j, -1+j, -1-j, -1-j, 1+j, 1+j, -1-j, -1+j, -1-j, 1+j, -1-j, -1-j, 1+j, 1+j, -1-j, 1+j, -1+j, 1+j, 1+j, 1+j, -1-j, -1-j, 1-j, -1-j, 1-j, -1-j, -1+j, -1-j, -1-j, 1+j, 1+j, -1-j, 1+j, -1+j, 1+j, 1+j, 1+j, -1-j, -1-j, 1-j, -1-j, 1-j, 1+j, 1-j, 1+j, 1+j, -1-j, -1-j, 1+j, 1-j, 1+j, -1-j, 1+j, 1+j, -1-j, -1-j, 1+j, -1-j, 1-j, -1-j, -1-j, -1-j, 1+j, 1+j, -1+j, 1+j, 1-j, -1-j, -1+j, -1-j, -1-j, 1+j, 1+j, -1-j, -1+j, -1-j, 1+j, -1-j, -1-j, 1+j, -1-j, -1-j, -1-j, -1-j, 1+j, -1-j, 1-j, -1-j, -1-j, -1-j, 1+j, 1+j, -1+j, 1+j, -1+j, 1+j, 1+j, 1-j, 1+j, 1+j, -1-j, -1-j, -1-j, 1+j, 1-j, 1+j, -1-j, 1+j, 1+j, 1+j, 1+j, -1-j, 1+j, -1+j, 1+j, 1+j, 1+j, -1-j, -1-j, 1-j, -1-j, 1-j, -1-j, -1-j, -1-j, -1+j, -1-j, -1-j, 1+j, 1+j, -1-j, -1+j, -1-j, 1+j, -1-j, -1-j} (37)

In the case that the UL allocation contains midambles, the midambles shall consist of one OFDM symbol and shall be identical to the preamble used with the allocation.

UL preambles and midambles may be cyclically delayed by an integer number of samples. This is indicated by the UL-Physical modifier IE (8.3.6.3.7).

8.3.4 Transmission convergence sublayer (TCS)

The TCS, as described in 8.1.4.3, is an optional mechanism for the OFDM PHY and can be enabled on a per-burst basis for both UL and DL through the DIUC/UIUC definitions in the DCD/UCD messages, respectively. The TCS_ENABLE parameter is coded as a TLV tuple as defined in 11.4.2 (i.e., DCD burst profile encodings) and 11.3.1.1 (i.e., UCD burst profile encodings).

At SS initialization, the TC sublayer capability is negotiated between the BS and SS through SBC-REC/ SBC-RSP messages as an OFDM PHY specific parameter. The TC sublayer capability parameter is coded as a TLV tuple as defined in 11.8.3.4.4.

8.3.5 Frame structure

8.3.5.1 PMP

In licensed bands, the duplexing method shall be either FDD or TDD. FDD SSs may be H-FDD. In license-exempt bands, the duplexing method shall be TDD. Examples of TDD and FDD frame structures are shown in Figure 209 and Figure 210, respectively.

The frame interval contains transmissions (PHY PDUs) of BS and SSs, gaps and guard intervals.

The OFDM PHY supports a frame-based transmission. A frame consists of a DL subframe and an UL subframe. A DL subframe consists of only one DL PHY PDU. A UL subframe consists of contention intervals scheduled for initial ranging and BR purposes and one or multiple UL PHY PDUs, each transmitted from a different SS.

A DL PHY PDU starts with a long preamble, which is used for PHY synchronization. The preamble is followed by a FCH burst. The FCH burst is one OFDM symbol long and is transmitted using BPSK rate 1/2 with the mandatory coding scheme. The FCH contains DL_Frame_Prefix to specify burst profile and length of one or several DL bursts immediately following the FCH. See Figure 261 for the format of the DL_Frame_Prefix. A DL-MAP message, if transmitted in the current frame, shall be the first MAC PDU in the burst following the FCH. An UL-MAP message shall immediately follow either the DL-MAP message (if one is transmitted) or the DLFP. If UCD and DCD messages are transmitted in the frame, they shall immediately follow the DL-MAP and UL-MAP messages. Although burst #1 contains broadcast MAC control messages, it is not necessary to use the most robust well-known modulation/coding. A more efficient modulation/coding may be used if it is supported and applicable to all the SSs of a BS.

The FCH is followed by one or multiple DL bursts. Each DL burst consists of an integer number of OFDM symbols. Location and profile of the first DL burst is specified in the DL frame prefix (DLFP). The location and profile of the maximum possible number of subsequent bursts shall also be specified in the DLFP. At least one full DL-MAP shall be broadcast in burst #1 within the Lost DL-MAP Interval specified in Table 554. Location and profile of other bursts are specified in DL-MAP. Profile is specified either by a 4-bit Rate_ID (for the first DL burst) or by DIUC. The DIUC encoding is defined in the DCD messages. HCS field occupies the last byte of DLFP. If there are unused IEs in DLFP, the first unused IE shall have all fields encoded as zeros.

The DL Subframe may optionally contain an STC zone in which all DL bursts are STC encoded. If an STC zone is present, the last used IE in the DLFP shall have DIUC = 0 (see Table 275) and the IE shall contain information on the start time of the STC zone (see Table 279). The STC zone ends at the end of the frame.

The STC zone starts from a preamble. The BS can choose between the following two modes of operation:

a) *No FCH-STC present.* If the regular DL-MAP describes allocations in the STC zone, then the STC zone shall start with an STC preamble that may be immediately followed by encoded PHY bursts, with no FCH-STC present.
b) *FCH-STC present.* If the DL-MAP does not describe allocations in the STC zone, then the STC zone shall start with an STC preamble that is immediately followed by an STC-encoded FCH-STC burst, which is one symbol with the same payload format as specified in Table 260. The FCH-STC burst is transmitted at BPSK rate 1/2. It is followed by one or several STC-encoded PHY bursts. The first burst in the STC zone may contain a DL-MAP applicable only to the STC zone, in which the DL IEs' start times refer to the beginning of the STC zone, including preamble. If DL-MAP is present, it shall be the first MAC PDU in the payload of the burst. The STC zone may also contain an UL-MAP as well as DCD and UCD messages. The UL-MAP, if present, shall not duplicate or overlap any unicast allocations made in the regular UL-MAP, and the allocation start time shall refer to the beginning of the STC zone. The UL-MAP, if present, shall not contain duplicate or overlapping unicast allocations (defined within same or any other UL-MAP). Contention region allocations may be duplicated, in which case they shall fully overlap. The randomizer and pilot modulation shall be reinitialized at the beginning of the STC zone.

The SS will be able to determine that there is no STC data allocation in frame K-1 STC zone by determining that there has been no STC zone in the previous frame K-2.

The DL subframe may optionally contain a DL subchannelization zone as described in 8.3.5.1.1.

With the OFDM PHY, a PHY burst, either a DL PHY burst or an UL PHY burst, consists of an integer number of OFDM symbols, carrying MAC messages, i.e., MAC PDUs. To form an integer number of OFDM symbols, unused bytes in the burst payload may be padded by the bytes 0xFF. Then the payload shall be randomized, encoded, and modulated using the burst PHY parameters specified by this standard. If an SS does not have any data to be transmitted in an UL allocation, the SS shall transmit an UL PHY burst (as specified in 6.3.3.7) that may contain a BR header as defined in Figure 23, with BR = 0 and its basic CID. If the allocation is large enough, an AAS-enabled SS may also provide an AAS Feedback Response (AAS-FBCK-RSP) message (6.3.2.3.35). An SS shall transmit during the entirety of all of its UL allocations, using the standard padding mechanism (6.3.3.7) to fill allocations if necessary.

In each TDD frame (see Figure 209), the TTG and RTG shall be inserted between the DL and UL subframe and at the end of each frame, respectively, to allow the BS to turn around.

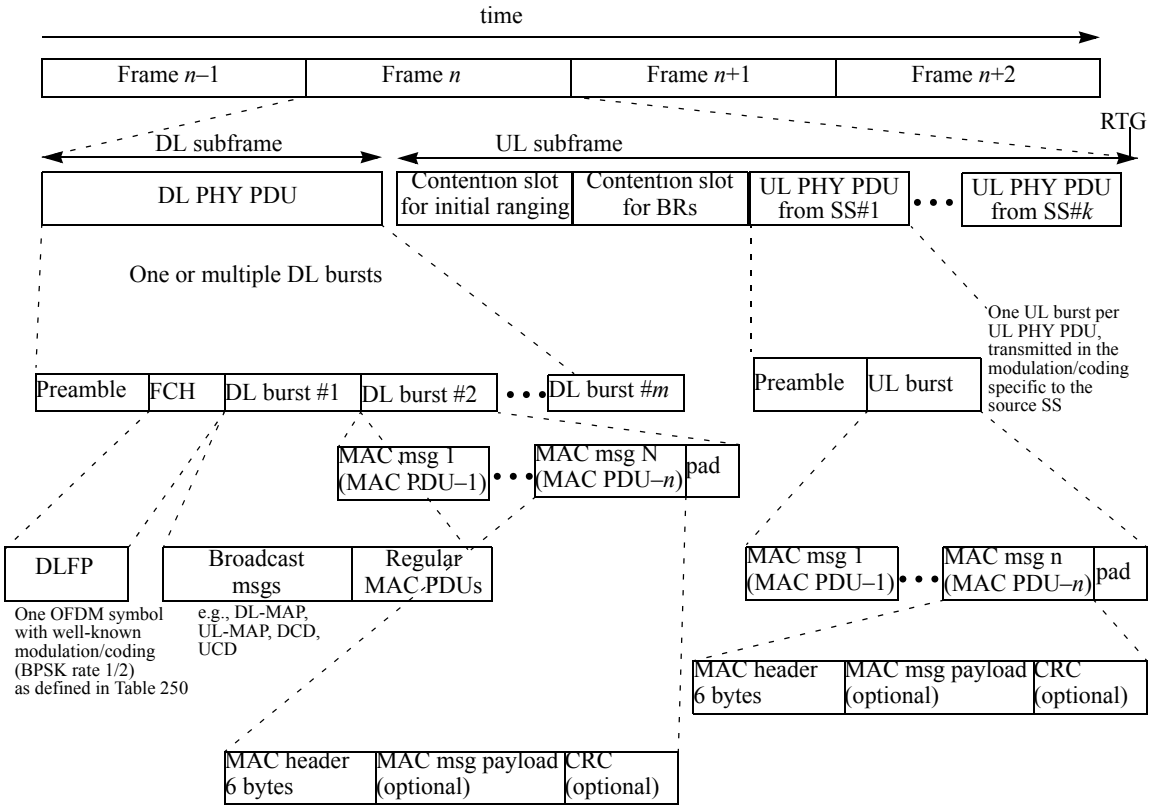

Figure 209—Example of OFDM frame structure with TDD

In TDD and H-FDD systems, SS allowances shall be made by a Tx-Rx turnaround gap SSTTG and by a Rx-Tx turnaround gap SSRTG. The BS shall transmit DL bursts intended for an SS so that the end of any DL burst shall not be transmitted to the SS later than (SSRTG + RTD) before its scheduled UL allocation and the beginning of any DL burst to the SS shall not be transmitted to the SS earlier than (SSTTG – RTD) after the end of its scheduled UL allocation, where RTD denotes round-trip delay. The parameters SSRTG and SSTTG are capabilities provided by the SS to BS upon request during network entry (see 11.8.3.1).

Because the optional STC and AAS zones may contain UL-MAPs, along with the UL-MAP transmitted in the mandatory part of the frame, and because the allocation start time for frames may vary from one frame to the next, there is a possibility that UL-MAPs from two frames, or from different zones, may describe overlapping time intervals. Where MAP IEs (contained in either a AAS-DLFP or a UL-MAP) describe overlapping time intervals with MAP IEs from another UL-MAP (or AAS-DLFP), then an SS shall interpret and use those from the most recently received map. MAP IEs that do not conflict with MAP IEs received in earlier UL-MAPs (or AAS-DLFP) shall augment the UL-MAP.

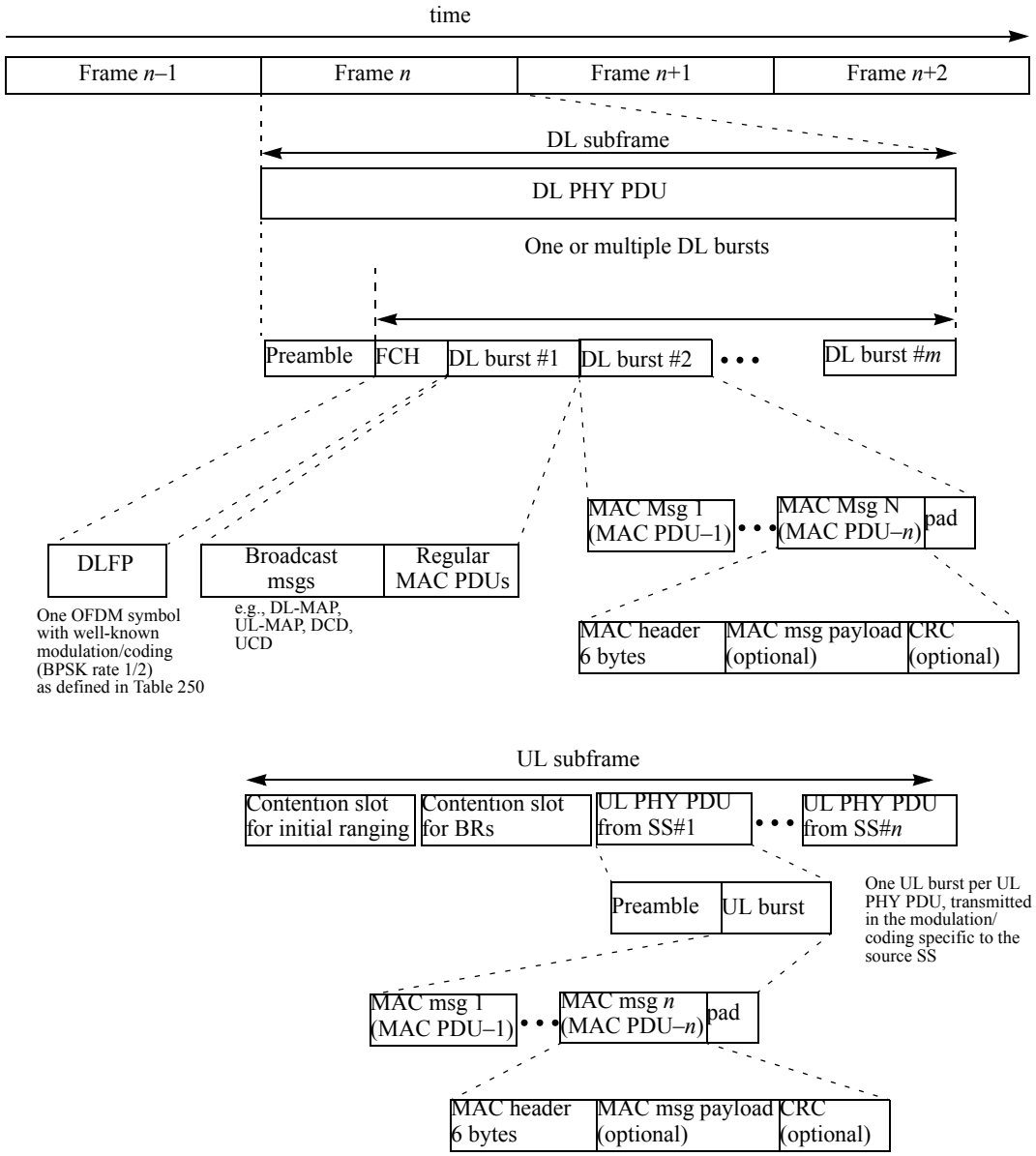

Figure 210—Example of OFDM frame structure with FDD

Table 260—OFDM DL frame prefix format

Syntax	Size (bit)	Notes
DL_Frame_Prefix_Format() {	—	—
Base_Station_ID	4	4 LSB of BSID. Prior to completion of network entry, the SS shall ignore this field and decode all bursts specified by the DLFP. Upon completion of network entry, the SS shall validate these bits with those of the BS on which it is registered. The burst specified by the DLFP shall not be decoded if these bits do not match those of the BS on which it is registered.

Table 260—OFDM DL frame prefix format *(continued)*

Syntax	Size (bit)	Notes
Frame_Number	4	4 LSB of the frame number of current frame.
Configuration_Change_Count	4	4 LSB of change count value as specified in 6.3.2.3.1.
Reserved	4	Shall be set to zero.
Rate_ID	4	Encoded according to the Table 259.
Reserved	1	Shall be set to zero.
Length	11	Number of OFDM symbols in the first burst.
for (n = 0; n < 3; n++) {	—	—
DL_Frame_Prefix_IE() {	—	—
DIUC	4	Defines the burst profile of the corresponding burst.
if (DIUC != 0){	—	—
Preamble present	1	If 1, preamble is placed as the first symbol in the burst.
Length	11	Number of OFDM symbols in the burst, including preamble if present.
} else {	—	—
Start Time	12	Start time of STC zone in units of symbol duration counted from the beginning of the frame.
}	—	—
}	—	—
}	—	—
HCS	8	An 8-bit header check sequence; calculated as specified in Table 5.
}	—	—

HCS

An 8-bit header check sequence used to detect errors in the DL Frame Prefix. The generator polynomial is $g(D) = D^8 + D^2 + D + 1$. The transmitter shall take all the bytes in the DL Frame Prefix except the byte reserved for the HCS and divide them by $g(x)$ and use the remainder as HCS code. At the receiver, dividing the DL_Frame_Prefix by $g(x)$ then gives the remainder 0 if correct. (Example: BS_ID = 0x0319B812A9B8 (4LSB = 0x8), Frame_Number = 187662 (4LSB = 0xE), Configuration_Change_Count = 159 (4LSB = 0xF), *Reserved* = 0x0, Rate_ID = 1 (0x1), Length = 204 (0x0CC), DLFP_IE(1) DIUC = 1 (0x1), DLFP_IE(1) Midamble Present = 1 / Burst_Length = 50 (0x832), all following DLFP_IEs = 0 (2 times 0x0000). Encode byte sequence [0x8EF010CC183200000000] and obtain 0x30 as the HCS byte.)

8.3.5.1.1 PMP DL subchannelization zone

The DL subframe may optionally contain a DL subchannelization zone. This zone is marked by a DL SUBCH IE in the DL-MAP.

The DL subchannelization zone is shown in Figure 211.

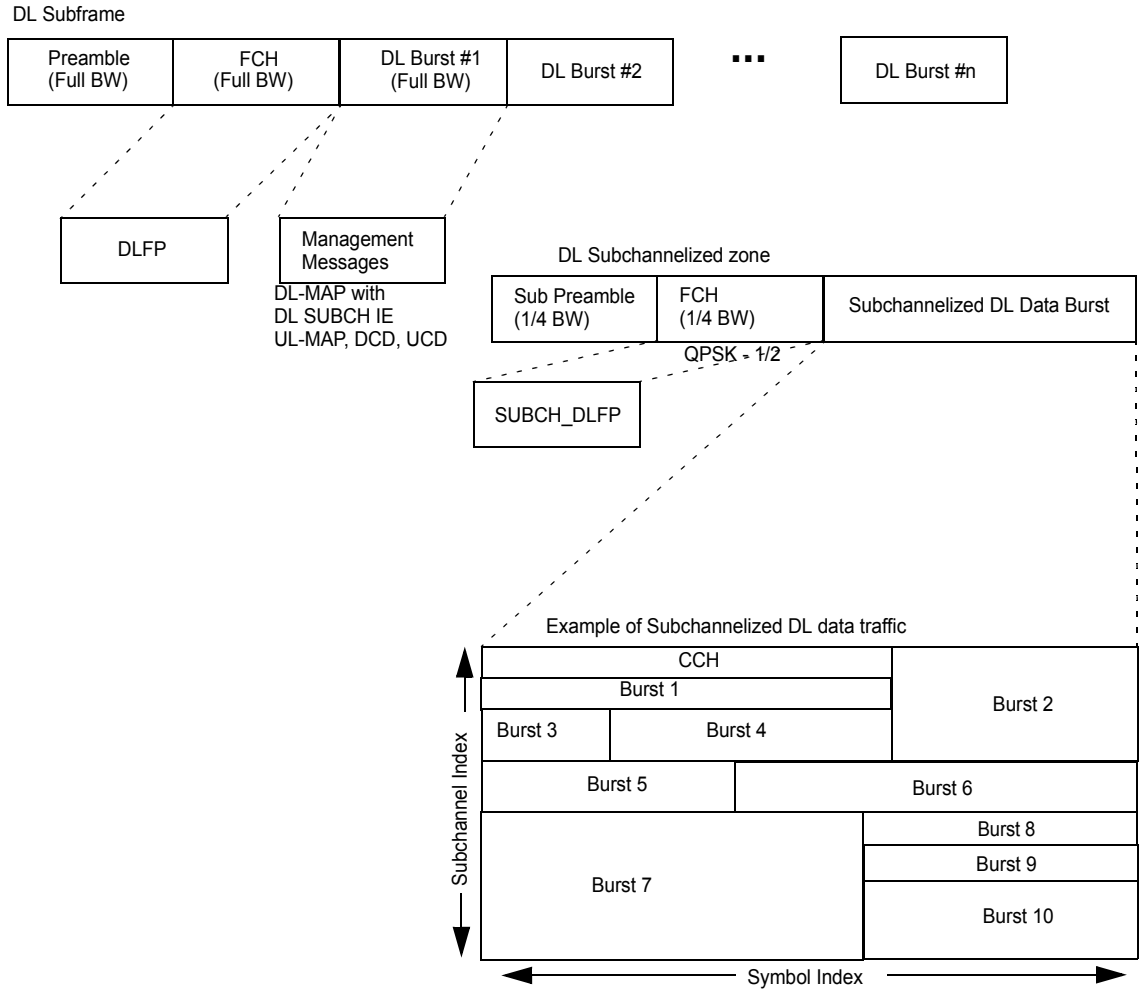

Figure 211—Format of DL subchannelization zone

The zone commences with a subchannelized preamble followed by a subchannelized FCH burst. The FCH is transmitted using QPSK-1/2. The FCH is transmitted over 1/4 of the bandwidth. The carrier allocation is as given in Table 248 (regarding OFDM symbol parameters).

The subchannel index of the FCH shall be one of the codes 0b00100, 0b01100, 0b10100, or 0b11100. The subchannel index should preferably be provisioned by the operator to avoid illumination of an area by BSs using the same frequency channel with the same subchannel index. If not provisioned, the subchannel index shall, by default, be derived from the 2 LSBs of the BSID as in Table 261.

The FCH contains the SBCH_DLFP, which points to the control subchannel (CCH), and contains the profile and length of the first burst in it. The SBCH_DLFP is shown in Table 262.

Table 261—DL Subchannel index table

2 LSBs of BSID (binary)	Subchannel index according to Table 248 (binary)
00	00100
01	01100
10	10100
11	11100

Table 262—SBCH_DLFP

Field	Size (bit)	Comments
SBCH_DL_Frame_Prefix_format() {	—	—
Base_Station_ID	4	4 LSBs of BSID. The burst specified by the DFLP shall not be decoded if these bits do not match those of the BS on which it is registered.
Frame_Number	4	4 LSBs of Frame Number field .
Configuration_Change_Count	4	4 LSBs of Change Count value as specified in 6.3.2.3.1.
CCH_Rate ID	4	The Rate ID, according to Table 259, of the first burst of the CCH.
CCH duration	8	The duration of the first burst in the CCH.
Reserved	1	Shall be set to zero.
CCH subchannel index	5	The subchannel index in which the CCH is transmitted. See Table 248.
CCH midamble repetition	2	The midamble repetition rate of the first burst of the CCH: 0b00: Preamble only 0b01: Midamble after every 4 data symbols 0b10: Midamble after every 8 data symbols 0b11: Midamble after every 16 data symbols
HCS	8	An 8-bit header check sequence; calculated as specified in Table 5.
}	—	—

The FCH is followed by subchannelized traffic on allocated subchannels. The subcarrier allocation of the subchannels is given in Table 248. Bursts in the DL subchannelized zone shall contain midambles when indicated in the midamble repetition field.

The CCH may carry UL and DL maps. UL maps shall use the format of UL-MAP IE as in Table 284. DL maps shall use the format if SBCH DL-MAP IE as in Table 263.

Table 263—SBCH DL-MAP IE

Syntax	Size (bit)	Notes
SBCH_DL_MAP_IE() {	—	—
CID	16	—
Start Time	11	—
Subchannel Index	5	—
DIUC	4	—
Duration	10	In OFDM symbols
Midamble repetition interval	2	0b00: Preamble only 0b01: Midamble after every 4 data symbols 0b10: Midamble after every 8 data symbols 0b11: Midamble after every 16 data symbols
}	—	—

Start Time

This field indicates the start time in units of symbol duration, relative to the beginning of the subsequent DL subchannelized zone (including preamble).

A BS shall assume that the MS is not capable of receiving more than one burst in a single frame. Therefore DL allocations contained in SBCH DL-MAP IEs in the CCH shall point to future frames. When an allocation is present for a given MS, the BS shall assume that the MS may not be capable of demodulating the CCH in that frame, and therefore not include any SBCH DL-MAP IEs or UL-MAP IEs for that MS.

8.3.5.2 PMP-AAS Zone

DL transmission to an SS or group of SSs consists of two fractions. The first fraction of the transmission consists of one or several repetitions of a short preamble followed by AAS-FCH symbol (Figure 212). The second fraction is called Body.

The randomizer shall be reinitialized with the sequence 1 0 0 1 0 1 0 1 0 0 0 0 0 0 0 for all the AAS-FCH bursts and not initialized for the first burst of the body. It is then reinitialized as specified in Figure 200 for subsequent bursts.

AAS-FCH payload is called “AAS DL Frame Prefix” (AAS_DLFP). AAS-FCH shall be transmitted at the lowest possible modulation. Each pair preamble–AAS-FCH may be transmitted either at narrow beam or at wide beam. Optionally, the same preamble–AAS-FCH pair may be repeated at several beams thus implementing space diversity. In the case when AAS-FCH is repeated for diversity, all copies have the same content and therefore soft combining might be employed at the SS receiver.

AAS_DLFP contains information (DL IEs or UL IEs) on location and transmission rate of PHY bursts. There is a possibility of more than one concatenated DL PHY burst, each one described by a DL IE. UL IEs specify either UL PHY burst (a single burst per SS) or contention region for initial ranging or bandwidth requesting. The DL IEs and UL IEs in each AAS_DLFP shall appear in the same order as the allocations to

which they refer. The DL IEs and UL IEs described in the AAS portion of the zone shall not be described in the broadcast DL-MAP and UL-MAP.

Body may be transmitted at a directed beam and may start either immediately after AAS-FCH or at some distance. In the latter case, it shall start from a preamble. The payload of the burst may contain private DL-MAP and/or UL-MAP messages.

Alternatively, AAS_DLFP may contain UL IEs. There are two options:

a) A single UL IE
b) "Compressed" UL IE, which contains a network entry allocation and a regular allocation

The minimum time between an UL IE and the corresponding UL burst shall be equal to the relevance time of an UL-MAP as described in 6.3.7.5.

An example of AAS zone layout is shown at Figure 212.

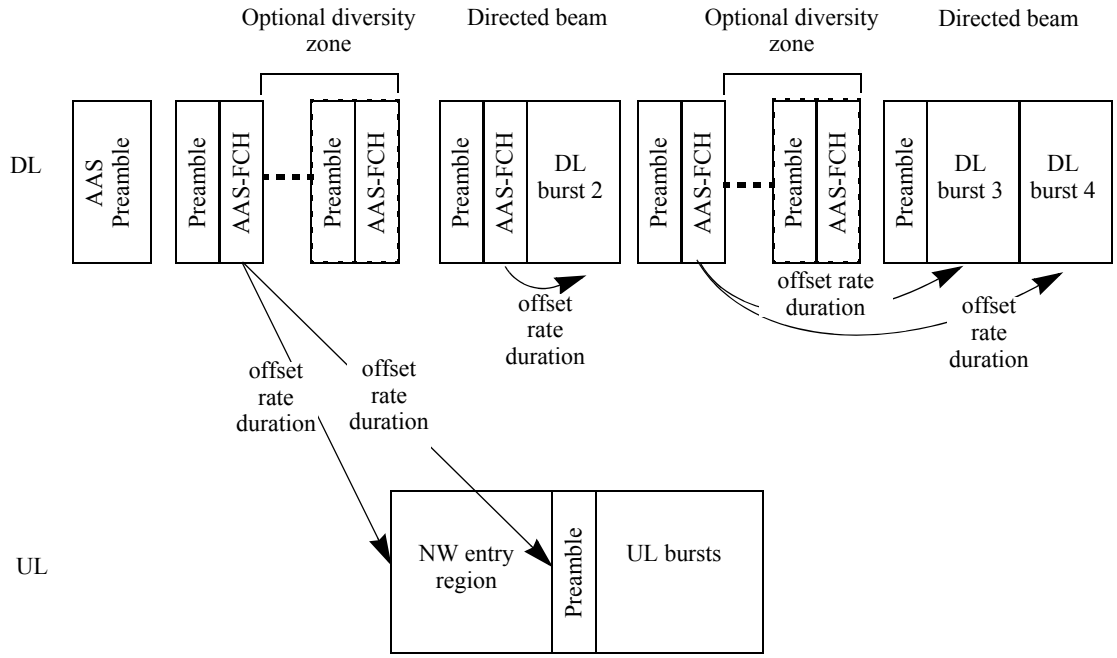

Figure 212—Structure of AAS Zone

The structure of AAS_DLFP is specified in Table 264.

The format for AAS_DLFP_DL IE is shown in Table 265.

The format for AAS_DLFP_UL IE is shown in Table 266.

AAS COMP UL IE shall be used to specify two UL allocations. One of them shall be for NW entry; another one is either unicast allocation or multicast/broadcast polling allocation. See Table 267.

The format for AAS NW Entry Response IE is shown in Table 269.

Table 264—AAS_DLFP structure

Syntax	Size (bit)	Notes
AAS_DLFP(){	—	—
Base_Station_ID	4	4 LSB of BSID.
Frame_Number	4	4 LSB of the Frame Number DCD Channel Encoding as specified in Table 575.
Reserved	6	Shall be set to zero.
Dir	1	Allocation direction: Dir = 1 means UL.
Allocation Start	13	Points to the start of Body fraction; expressed in the terms of offset from the beginning of the AAS preamble.
if (Dir == 1) {	—	—
UCD_Configuration_Change_Count	3	3 LSB of UCD Change Count value as specified in 6.3.2.3.3.
Comp_UL	1	Compressed UL IE is present if bit is set to 1, else full UL IE.
If (**Comp_UL** == 1){	—	—
AAS_COMP_UL_IE()	48	—
} else {	—	—
AAS_DLFP_UL_IE()	48	—
}	—	—
} else {	—	—
Reserved	1	Shall be set to zero.
DCD_Configuration_Change_Count	3	3 LSB of DCD Change Count value as specified in 6.3.2.3.1.
AAS_DLFP_DL_IE()	16	—
AAS_DLFP_DL_IE()	16	—
AAS_DLFP_DL_IE()	16	—
}	—	—
HCS	8	An 8-bit header check sequence; calculated as specified in Table 5.
}	—	—

Frame Number Index

Identifies the frame in which the network entry request, which this message responds to, was transmitted. The 4 LSBs of the frame number are used as the frame number index.

Network Entry Code

Random code sent by the SS in AAS Network Entry Request.

Table 265—AAS_DLFP_DL IE format

Syntax	Size (bit)	Notes
AAS_DLFP_DL_IE() {	—	—
Rate_ID /DIUC	4	For the first information element it shall be Rate_ID encoded according to the Table 259. For following IEs this field is DIUC that defines the burst profile of the corresponding burst.
Preamble present	1	If 1, midamble is placed before the burst.
Length	11	Number of OFDM symbols in the burst.
}	—	—

Table 266—AAS_DLFP_UL IE format

Syntax	Size (bit)	Notes
AAS_DLFP_UL_IE() {	—	—
UIUC	4	UIUC value; see Table 268.
If (**UIUC** == 1) {	—	—
AAS_NW_Entry_Response_IE()	16	—
} else If (**UIUC** == 4) {	—	—
Focused_Contention_Response_IE()	16	—
} else {	—	—
CID	16	If UIUC = 2, this shall be multicast or broadcast CID, the allocation shall be used for multicast polling.
}	—	—
Preamble time shift	8	Shift to be performed on preamble and midambles. See 8.3.6.3.7.
Reserved	1	Shall be set to zero.
Subchannel_Index	5	—
Midamble repetition interval	2	0b00: Preamble only. 0b01: Interval 5: Midamble after every 4 data symbols. 0b10: Interval 9: Midamble after every 8 data symbols. 0b11: Interval 17: Midamble after every 16 data symbols.
Duration	12	In OFDM symbols.
}	—	—

Table 267—AAS_COMP_UL IE format

Syntax	Size (bit)	Notes
AAS_COMP_UL_IE() {		
UIUC	4	UIUC value; see Table 268.
If (**UIUC** == 1) {		
AAS_NW_Entry_Response_IE()	16	
} else If (**UIUC** == 4) {		
Focused_Contention_Response_IE()	16	
} else {		
CID	16	For regular allocation.
}		
Subchannel_Index_NW_Entry	5	For NW entry allocation.
Duration_NW_entry	9	Duration of NW entry allocation in OFDM symbols.
Subchannel_Index	5	For regular allocation.
Duration	9	Duration of regular allocation in OFDM symbols.
}		

Table 268—UIUC usage in AAS zone

UIUC	Usage
0	*Reserved*
1	AAS NW Entry Response
2	REQ Region Full
3	REQ Region Focused
4	Focused Contention Response IE
5–13	Burst Profiles (Data Grant Burst Type)

Table 269—AAS NW Entry Response IE format

Syntax	Size (bit)	Notes
AAS_NW_Entry_Response_IE(){	—	—
Frame Number Index	4	4 LSB of Frame Number field.
Network Entry Code	4	Random code sent by the SS in AAS Network Entry Request.
Reserved	8	Shall be set to zero.
}	—	—

8.3.5.3 Frame duration codes

Table 270 indicates the specific frame durations that are allowed. The frame duration used can be determined by the periodicity of the frame start preambles. Once a specific frame duration has been selected by the BS, it should not be changed. Changing the frame duration shall force all SSs to resynchronize to the BS.

Table 270—OFDM frame duration (T_f ms) codes

Code	Frame duration (ms)	Frames per second
0	2.5	400
1	4	250
2	5	200
3	8	125
4	10	100
5	12.5	80
6	20	50
7–255	*Reserved*	*Reserved*

8.3.5.4 Burst profile format

Table 271 defines the format of the Downlink_Burst_Profile, which is used in the DCD message (6.3.2.3.1). The Downlink_Burst_Profile is encoded with a Type of 1, an 8-bit length, and a 4-bit DIUC. The DIUC field is associated with the DL burst profile. The DIUC value is used in the DL-MAP message and in DLFP to specify the Burst Profile to be used for a specific DL burst.

Table 271—OFDM Downlink_Burst_Profile format

Syntax	Size (bit)	Notes
Downlink_Burst_Profile {	—	—
Type = 1	8	—
Length	8	—
Reserved	4	Shall be set to zero
DIUC	4	—
TLV encoded information	*variable*	—
}	—	—

Table 272 defines the format of the Uplink_Burst_Profile, which is used in the UCD message (6.3.2.3.3). The Uplink_Burst_Profile is encoded with a Type of 1, an 8-bit length, and a 4-bit UIUC. The UIUC field is

associated with the UL burst profile. The UIUC value is used in the UL-MAP message to specify the burst profile to be used for a specific UL burst.

Table 272—OFDM Uplink_Burst_Profile format

Syntax	Size (bit)	Notes
Uplink_Burst_Profile {		
Type = 1	8	
Length	8	
Reserved	4	Shall be set to zero
UIUC	4	
TLV encoded information	*variable*	
}		

8.3.6 Map message fields and IEs

8.3.6.1 DL-MAP PHY synchronization field

The PHY synchronization field of the DL-MAP message is structured as shown in Table 273.

Table 273—OFDM PHY synchronization field

Syntax	Size	Notes
Synchronization_field {	—	The OFDM PHY synchronization field is empty (zero bytes long).
}	—	—

8.3.6.2 DL-MAP IE format

DL-MAP IEs have the format listed in Table 274.

Connection Identifier (CID)

Represents the assignment of the IE to a broadcast, multicast, or unicast address.

If the broadcast or multicast CID is used, then it is possible to concatenate unicast MAC PDUs (with different CIDs) into a single DL burst. During a broadcast or multicast DL burst, it is the responsibility of the BS to ensure that any bursts sent to an H-FDD SS do not overlap (in time; taking SSTTG and SSRTG into account) any UL allocations for that SS. An H-FDD SS for which a DL MAP IE and UL MAP IE overlap in time shall use the UL allocation and discard DL traffic during the overlapping period.

DIUC

A 4-bit DIUC shall be used to define the burst type associated with that time interval. Burst Descriptor shall be included into DCD message for each DIUC used in the DL-MAP except those associated with Gap, End of Map, and Extended. The DIUC shall be one of the values defined in Table 275.

Table 274—OFDM DL-MAP IE

Syntax	Size (bit)	Notes
DL-MAP_IE() {	—	—
CID	16	—
DIUC	4	—
Preamble present	1	0 = not present, 1 = present if (DIUC == 15 and not Extended DIUC = 3), shall be 0.
Start Time	11	—
if (DIUC == 15)	—	—
Extended DIUC dependent IE	*variable*	See subclauses following 8.3.6.2.2.
Padding nibble, if needed	4	Completing to nearest byte.
}	—	—

Preamble present

If set, the indicated burst shall start with the short preamble.

Start Time

If transmitted in a private map (for compressed private map, see 8.3.6.6; for reduced private map, see 8.3.6.7) within an AAS zone, this field indicates the start time, in units of symbol duration, relative to the beginning of the subsequent AAS zone (including preamble) where the DL-MAP message is transmitted. If transmitted in a compressed private map (see 8.3.6.6), this field indicates the start time, in units of symbol duration, relative to the beginning of the subsequent DL frame (including preamble). For a DL-MAP in the STC zone, this field indicates the start time in units of symbol duration, relative to the start of the first symbol of the STC zone (including preamble).The end of the last allocated burst is indicated by allocating an End of Map burst (DIUC = 14) with zero duration. The time instants indicated by the Start Time values are the transmission times of the first symbol of the burst including (if present) any preamble.

8.3.6.2.1 DIUC allocations

Table 275 contains the DIUC values used in DL-MAP_IE().

Table 275—OFDM DIUC values

DIUC	Usage
0	STC zone
1–11	Burst Profiles
12	*Reserved*
13	Gap
14	End of Map
15	Extended DIUC

The Gap Downlink Burst Profile (DIUC = 13) indicates that the BS does not transmit (a silent interval in DL transmission) and the SS shall ignore the received signal.

8.3.6.2.2 DL-MAP Extended IE format

A DL-MAP IE entry with a DIUC = 15 indicates that the IE carries special information and conforms to the structure shown in Table 276. A station shall ignore an extended IE entry with an extended DIUC value for which the station has no knowledge. In the case of a known extended DIUC value but with a length field longer than expected, the station shall process information up to the known length and ignore the remainder of the IE.

Table 276—DL-MAP Extended IE format

Syntax	Size (bit)	Notes
DL_Extended_IE() {	—	—
Extended DIUC	4	0x0..0xF
Length	4	Length in bytes of Unspecified Data field
Unspecified data	*variable*	—
}	—	—

8.3.6.2.3 Channel Measurement IE format

An extended IE with an extended DIUC = 0x00 is issued by the BS to request a channel measurement (see 6.3.2.3.33). The Channel_Measurement_IE() shall be followed by the End of Map IE (DIUC = 14).

Table 277—OFDM Channel measurement IE format

Syntax	Size (bit)	Notes
Channel_Measurement_IE() {	—	—
Extended DIUC	4	CHM = 0x0
Length	4	Length = 0x01
Channel Nr	8	Channel number (see 8.5.1) Set to zero for bands outside the 5GHz to 6GHz band and licensed bands within the 5GHz to 6GHz band.
}	—	—

8.3.6.2.4 DL-MAP AAS IE format

Within a frame, the switch from non-AAS to AAS-enabled traffic is marked by using the DIUC = 15 with the AAS_IE() to indicate that the subsequent allocations, until the start of the first UL-MAP allocation using TDD, and until the end of the frame using FDD, shall be for AAS traffic. When used, the CID in the

DL-MAP_IE() shall be set to the Broadcast CID. Subsequent AAS PHY bursts shall all start with the short preamble.

Table 278—OFDM AAS DL IE format

Syntax	Size (bit)	Notes
AAS_DL_IE() {	—	—
Extended DIUC	4	AAS = 0x2
Length	4	Length = 0x00
}	—	—

8.3.6.2.5 DL-MAP STC IE format

In the DL-MAP, an STC enabled BS (see 8.3.8) may transmit DIUC = 15 with the STC_IE() to indicate that the subsequent allocations shall be STC encoded. No preceding DL allocations shall be STC encoded and all subsequent DL allocations until the end of the frame shall be STC encoded. After this allocation, the BS shall transmit from both its antennas until the end of the frame. The first DL allocation following the STC IE shall contain a preamble. The number of OFDM data symbols between two preambles and the number of OFDM data symbols between the last preamble and the end of the DL subframe shall be even.

Table 279—OFDM STC IE format

Syntax	Size (bit)	Notes
STC_IE() {	—	—
Extended DIUC	4	STC = 0x4
Length	4	Length = 0x00
}	—	—

8.3.6.2.6 DL-MAP Concurrent Transmission IE format

In the DL-MAP, a BS may transmit UIUC = 15 with the DL_Concurrent_IE() to specify one of a set of parallel DL bursts for transmission. This format explicitly specifies the duration of the corresponding DL burst. A preamble may precede the DL burst specified by this IE.

Table 280—OFDM DL-MAP Concurrent Transmission IE format

Syntax	Size (bit)	Notes
DL_Concurrent_IE() {	—	—
Extended DIUC	4	CONC = 0x3
Length	4	Length = 2
DIUC	4	—
Duration	12	Duration of burst in OFDM symbols
}	—	—

DIUC
A 4-bit DIUC shall be used to define the burst type associated with that time interval. Burst Descriptor shall be included into DCD message for each DIUC used in the DL-MAP. The DIUC shall be one of the Burst Profile values (1–12) defined in Table 275.

Duration
Indicates the duration of the burst, in units of OFDM symbols. The duration is inclusive of the preamble contained in the allocation, if present.

8.3.6.2.7 DL-MAP Physical Modifier IE format

The Physical Modifier IE (see Table 281) indicates that the subsequent bursts utilize a preamble, if present, which is cyclically delayed in time by *M* samples. Equation (38) defines the waveform transmitted during these training symbols. The PHYMOD DL IE can appear anywhere in the DL map, and it shall remain in effect until another PHYMOD DL IE is encountered, or until the end of the DL map.

Only stations that are allocated in bursts specified by a DL-MAP concurrent transmission IE format (8.3.6.2.6) shall receive the timely shifted preamble.

Table 281—OFDM DL-MAP Physical Modifier IE format

Syntax	Size (bit)	Notes
PHYMOD_DL_IE() {	—	—
Extended DIUC	4	PHYMOD = 0x1
Length	4	Length = 1
Preamble Time Shift	8	—
}	—	—

Preamble Time Shift
The parameter indicating how many samples of cyclic shift are introduced into the training symbols of the following bursts [*M* in Equation (38)].

8.3.6.2.8 DL-MAP Dummy IE format

An SS shall be able to decode the DL-MAP Dummy IE (see Table 282). A BS shall not transmit this IE (unless under test). An SS may skip decoding DL bursts scheduled after the Start Time of this IE within the current frame.

Table 282—OFDM DL-MAP Dummy IE format

Syntax	Size (bit)	Notes
Dummy_IE() {	—	—
Extended DIUC	4	0x06…0x0F
Length	4	0..15
Unspecified data	*variable*	The Length field specifies the size of this field in bytes
}	—	—

8.3.6.2.9 DL SUBCH IE format

In the DL-MAP a DL subchannelization enabled BS (see 8.3.5.3) may transmit an extended IE with a DUIC = 0x5 to indicate that subsequent allocations use DL subchannelization. The extended IE conforms to the structure in Table 283.

Table 283—DL SUBCH IE format

Syntax	Size (bit)	Comments
DL_SUBCH_IE() {	—	—
Extended DIUC	4	DL SUBCH = 0x5
Length	4	Length = 0x00
}	—	—

8.3.6.3 UL-MAP IE format

The UL-MAP IE defines the physical parameters and the start time for UL PHY bursts. The format of UL-MAP elements is shown in Table 284. Appearance of the Extended UIUC, means that the UL-MAP IE contains information that conforms to the format described in 8.3.6.3.4. The BS shall not assign, to any given SS, two or more overlapping subchannelized allocations in time. An H-FDD SS for which a DL MAP IE and UL MAP IE overlap in time shall use the UL allocation and discard DL traffic during the overlapping period.

Table 284—OFDM UL-MAP IE format

Syntax	Size (bit)	Notes
UL-MAP_IE() {		—
CID	16	—
Start Time	11	—
Subchannel Index	5	—
UIUC	4	—
Duration	10	In OFDM symbols
Midamble repetition interval	2	0b00: Preamble only 0b01: Interval 5: Midamble after every 4 data symbols 0b10: Interval 9: Midamble after every 8 data symbols 0b11: Interval 17: Midamble after every 16 data symbols
if (UIUC == 4)		—
Focused_Contention_IE()	16	—
if (UIUC == 13)		—
Subchannelized_Network_Entry_IE()	12	—
if (UIUC == 15)		—
UL_Extended_IE()	*variable*	See subclauses following 8.3.6.3.4
Padding nibble, if needed	4	Completing to nearest byte, shall be set to 0x0
}	—	—

CID

Represents the assignment of the IE to a unicast, multicast, or broadcast address. When specifically addressed to allocate a bandwidth grant, the CID shall be the Basic CID of the SS.

UIUC

A 4-bit UIUC shall be used to define the type of UL access and the burst type associated with that access. A Burst Descriptor shall be included into an UCD message for each UIUC that is to be used in the UL-MAP. The UIUC shall be one of the values defined in Table 285.

Start Time

Indicates the start time, in units of symbol duration, relative to the Allocation Start Time given in the UL-MAP message. The end of the last allocated burst is indicated by allocating an End of Map burst (CID = 0 and UIUC = 14).

Duration

Indicates the duration, in units of OFDM symbols, of the allocation.The duration is inclusive of the preamble, the midambles and the postamble, contained in the allocation.

Subchannel Index

See Table 248.

Midamble Repetition Interval

Indicates the preamble repetition interval in OFDM symbols. When the last section of burst after the last preamble/midamble is higher than half the midamble repetition interval (i.e., more than 2, 4, 8, for 0b01, 0b10, 0b11), a postamble shall be added at the end of the burst.

8.3.6.3.1 UIUC allocations

Table 285 contains the UIUC values used in the UL-MAP_IE().

Table 285—OFDM UIUC values

UIUC	Usage
0	*Reserved*
1	Initial ranging
2	REQ Region Full
3	REQ Region Focused
4	Focused Contention IE
5–12	Burst Profiles (Data Grant Burst Type)
13	Subchannelization network entry
14	End of Map
15	Extended UIUC

8.3.6.3.2 UL-MAP Focused Contention IE format

Table 286 defines the UL-MAP IE for allocation of bandwidth for an SS that requested bandwidth using focused contention reservation requests (see 6.3.6.4). This UL-MAP IE is identified by UIUC = 4 (see Table 285). An SS responding to a bandwidth allocation using the Focused Contention IE shall start its burst with a short preamble (see 8.3.3.6) and use only the most robust mandatory burst profile in that burst.

Table 286—OFDM Focused Contention IE format

Syntax	Size (bit)	Notes
Focused_Contention_IE() {	—	—
Frame Number Index	4	—
Transmit Opportunity Index	3	—
Contention Channel Index	6	—
Contention Code Index	3	—
}	—	—

Frame Number Index
Identifies the frame in which the network entry request, which this message responds to, was transmitted. The 4 LSBs of the frame number are used as the frame number index.

Transmit Opportunity Index
Index number of the Tx opportunity (used in the BR) to which this message is responding. The Tx opportunities are numbered from 0x0 to 0x7, where Tx opportunity 0x0 indicates the first Tx opportunity in the frame pointed by the Frame Number Index.

Contention Channel Index
Index number of the Contention Channel (used in the BR) to which this message is responding.
Contention Code Index
Index number of the Contention Code (used in the BR) to which this message is responding.

8.3.6.3.3 Subchannelized Network Entry IE

Table 287 defines the UL-MAP IE for allocation of bandwidth in response to a subchannelized network entry signal (see 8.3.7.2). This UL-MAP IE is identified by UIUC = 13 in the subchannelized section of the UL-MAP. An SS responding to a bandwidth allocation using the Subchannelized Network Entry IE shall start its burst with a subchannelization preamble (see 8.3.3.6) and use only the most robust mandatory burst profile in that burst.

Table 287—Subchannelized Network Entry IE format

Syntax	Size (bit)	Notes
Subchannelized_Network_Entry_IE() {	—	—
Frame Number Index	4	—
Transmit Opportunity Index	4	—
Contention Subchannel	4	—
}	—	—

Frame Number Index
Identifies the frame in which the network entry request, which this message responds to, was transmitted. The 4 LSBs of the frame number are used as the Frame Number Index.
Transmit Opportunity Index
Index number of the Tx opportunity that was used in the network entry, within the frame pointed by the Frame Number Index. The Tx opportunities are numbered from 0x00 to 0x0F, where Tx opportunity 0x00 indicates the first Tx opportunity in the frame pointed by the frame number index.
Contention Subchannel
The number of the subchannel that was used for network entry. The contention subchannels are numbered from 0 to 0xF and this number (n) represents the subchannel index (i) as specified in Table 248 according to $i = 2 \times n + 1$.

8.3.6.3.4 UL-MAP Extended IE format

A UL-MAP IE entry with a UIUC = 15 indicates that the IE carries special information and conforms to the structure shown in Table 288. A station shall ignore an extended IE entry with an extended UIUC value for which the station has no knowledge. In the case of a known extended UIUC value but with a length field longer than expected, the station shall process information up to the known length and ignore the remainder of the IE.

Table 288—OFDM UL-MAP Extended IE format

Syntax	Size (bit)	Notes
UL_Extended_IE() {	—	—
Extended UIUC	4	0x0..0xF
Length	4	Length in bytes of Unspecified Data field
Unspecified data	*variable*	—
}	—	—

8.3.6.3.5 UL-MAP Power Control IE format

When a power change for the SS is needed, UIUC = 15 is used with extended UIUC set to 0x0 and with 8-bit power control value as shown in Table 289. The power control value is an 8-bit signed integer expressing the change in power level (in 0.25 dB units) that the SS shall apply to correct its current transmission power. If the SS cannot apply the commanded power correction (i.e., SS is already at maximum or minimum power), the SS shall send a RNG-REQ message with Ranging Anomalies parameter.

The CID used in the IE should be the Basic CID of the SS.

Table 289—OFDM Power Control IE format

Syntax	Size (bit)	Notes
Power_Control_IE() {	—	—
Extended UIUC	4	Fast power control = 0x0
Length	4	Length = 1
Power control	8	Signed integer, which expresses the change in power level (in 0.25 dB units) that the SS should apply to correct its current transmission power.
}	—	—

8.3.6.3.6 UL-MAP AAS IE format

Within a frame, the switch from non-AAS to AAS-enabled traffic is marked by using the UIUC = 15 with the AAS_IE() to indicate that the subsequent allocation until the end of the frame shall be for AAS traffic. When used, the CID in the UL-MAP_IE() shall be set to the Broadcast CID. Subsequent AAS PHY bursts shall all start with the short preamble. Stations not supporting the AAS functionality shall ignore the portion of the frame marked for AAS traffic. The AAS_IE() shall not be used in AAS private map messages. See Table 290 for the format for OFDM AAS UL IE.

Table 290—OFDM AAS UL IE format

Syntax	Size (bit)	Notes
AAS_IE() {	—	—
Extended UIUC	4	AAS = 0x2
Length	4	Length = 0x00
}	—	—

8.3.6.3.7 UL-MAP Physical Modifier IE

The Physical Modifier IE indicates that the subsequent allocations shall utilize a preamble and midambles, which are cyclically delayed in time by M samples, meaning that the waveform transmitted during these training symbols shall be as shown in Equation (38).

$$s(t) = \mathrm{Re}\left\{ e^{2j\pi f_c t} \left(\sum_{\substack{k = -N_{used}/2 \\ k \neq 0}}^{k = N_{used}/2} \mathrm{c}_k \times e^{2j\pi k \Delta f (t - T_g - M/F_S)} \right) \right\} \tag{38}$$

where

t is the time, elapsed since the beginning of the OFDM symbol, with $0 < t < T_s$

Cyclically delaying the preambles and midambles is an optional feature. The PHYMOD UL IE can appear anywhere in the UL-MAP, and it shall remain in effect until another PHYMOD UL IE is encountered or until the end of the UL-MAP.

Table 291—OFDM UL-MAP Physical Modifier IE format

Syntax	Size (bit)	Notes
PHYMOD_UL_IE() {	—	—
Extended UIUC	4	PHYMOD = 0x1
Length	4	Length = 1
Preamble Time Shift	8	Preamble time shift
}	—	—

Preamble Time Shift

The parameter indicating how many samples of cyclic shift are introduced into the training symbols of the following allocations [M in Equation (38)].

8.3.6.3.8 UL-MAP Dummy IE format

An SS shall be able to decode the UL-MAP Dummy IE (see Table 292). A BS shall not transmit this IE (unless under test).

Table 292—OFDM UL-MAP Dummy IE format

Syntax	Size (bit)	Notes
Dummy_IE() {	—	—
Extended UIUC	4	0x4..0xF
Length	4	0..15
Unspecified data	*variable*	The Length field specifies the size of this field in bytes
}	—	—

8.3.6.3.9 Fast Ranging IE

A Fast Ranging IE may be placed in the UL-MAP message by a BS to provide a non-contention-based initial ranging opportunity. The Fast Ranging IE shall be placed in the extend UIUC (extension code = 0x03) within a UL-MAP IE. The Fast Ranging IE shall be assigned to the Initial Ranging CID = 0x0000. See Table 293 for the format for OFDM Fast Ranging IE.

Table 293—OFDM Fast Ranging IE format

Syntax	Size (bit)	Notes
Fast_Ranging_IE() {	—	—
Extended UIUC	4	Fast ranging = 0x3
Length	4	= 0x8
MAC address	48	MS's MAC address as provided on the RNG-REQ message on initial system entry.
UIUC	4	UIUC ≠ 15. UIUC ≠ 4. A code used to define the type of UL access and the burst type associated with that access.
Duration	12	The length, in units of OFDM symbols, of the allocation. The start time of the first allocation shall be the Allocation Start Time given in the UL-MAP message.
}	—	—

BS may assign subchannel indices other than 0b10000, only to the MS that entered the network using the subchannelized network entry (see 8.3.6.3.3).

8.3.6.3.10 UL-MAP Fast Tracking IE

The UL-MAP Fast Tracking IE in an UL-MAP entry is used to provide fast power, time, and frequency indications/corrections to MSs that have transmitted in the previous frame.

The extended UIUC = 15 shall be used for this IE with subcode 0x4.

The CID used in the IE shall be a Broadcast CID. See Table 294 for the format for the UL-MAP Fast Tracking IE.

Table 294—UL Fast Tracking IE

Syntax	Size (bit)	Notes
UL_Fast_Tracking_IE()	—	—
extended UIUC	4	Fast-Indication = 0x4
Number of Length	4	*Variable*
for (i = 1; i < n; i++) {	—	For each Fast Indication bytes 1 to n (n = Length)
Power correction	2	Power correction indication: 0b00: no change 0b01: +2 dB 0b10: –1 dB 0b11: –2 dB
Frequency correction	4	The correction is 0.1% of the subcarrier spacing multiplied by the 4-bit number interpreted as a signed integer (i.e., 0b1000: –8; … 0b0000: 0; … 0b0111: 7)
Time correction	2	The correction is floor(2 / Fs) multiplied by: 0b00: 0; 0b01: 1; 0b10: –1; 0b11: Not used
}	—	—
}	—	—

The UL Fast tracking IE is an optional field in the UL-MAP. When this IE is sent, it provides an indication about corrections that should be applied by MS's that have transmitted in the previous UL frame. Each indication byte shall correspond to one unicast allocation-IE that has indicated an UL burst allocation in the previous UL-MAP. The order of the indication bytes shall be the same as the order of the unicast allocation-IE in the UL-MAP.

The response time for corrections following receipt of this IE shall be equal to FPC Time as defined in 10.1. See also 6.3.2.3.34.

8.3.6.4 AAS-FBCK-REQ/RSP message bodies

The AAS-FBCK-REQ/RSP messages are used to request and return measurements that assist beam forming in AAS systems. The format of the AAS-FBCK-REQ message body is shown in Table 315.

Table 295—OFDM AAS Feedback Request message body

Syntax	Size (bit)	Notes
OFDM-AAS-FBCK-REQ_Message_Body() {	—	—
Frame Number	8	—
Start time	11	—
Feedback Request Counter	3	—
Frequency measurement resolution	2	—
}	—	—

Frame Number
The LSBs of the frame number of the burst on which the measurement shall be performed. Shall always point to a future frame.

Start time
Indicates the start time, in units of symbol duration, of the burst on which to perform the measurement. Shall be relative to the start of the frame pointed to by the Frame Number field.

Feedback Request Counter
Increases every time an AAS-FBCK-REQ is sent to the SS. Individual counters shall be maintained for each SS. The value 0 shall not be used.

Frequency measurement resolution
Indicates the frequency measurement points on which to report.

0b00:Carriers -100, -96, -92, -88, -84, -80, -76, -72, -68, -64, -60, -56, -52, -48, -44, -40, -36, -32, -28, -24, -20, -16, -12, -8, -4, 4, 8, 12, 16, 20, 24, 28, 32, 36, 40, 44, 48, 52, 56, 60, 64, 68, 72, 76, 80, 84, 88, 92, 96, 100

0b01:Carriers -100, -92, -84, -76, -68, -60, -52, -44, -36, -28, -20, -12, -4, 4, 12, 20, 28, 36, 44, 52, 60, 68, 76, 84, 92, 100

0b10:Carriers -100, -84, -68, -52, -36, -20, -4, 4, 20, 36, 52, 68, 84, 100

0b11:Carriers -100, -68, -36, -4, 4, 36, 68, 100

The measurements shall be transmitted in order of increasing frequency index.

The format of the AAS-FBCK-RSP message body is shown in Table 296.

Frame number
The LSBs of the frame number of the burst on which the measurement was performed. Shall always point to a past frame.

Start time
Indicates start time, in units of symbol duration, of the burst on which the measurement was performed. Shall be relative to the start of the frame pointed to by the “frame number” field.

Feedback Request Counter
Counter from the AAS-FBCK-REQ messages to which this is the response. The value 0 indicates that the response is unsolicited. In this case, the measurement corresponds to the preceding frame.

Frequency Measurement Resolution
Indicates the frequency measurement points reported on.

Table 296—OFDM AAS Feedback Response message body

Syntax	Size (bit)	Notes
OFDM-AAS-FBCK-RSP_Message_Body() {	—	—
Frame number	8	—
Start time	11	—
Feedback Request Counter	3	—
Frequency measurement resolution	2	Indicates the frequency measurement points as defined in Table 315.
for (*i* = 0; *i* < Number of Frequencies; *i*++){	—	Number of frequencies is either 50, 26, 14, or 8 as appropriate and depending on the value of the Frequency measurement resolution field.
Re(**Frequency_value**[*i*])	8	—
Im(**Frequency_value**[*i*])	8	—
}	—	—
RSSI mean value	8	—
CINR mean value	8	—
}	—	—

Number of Frequencies

The number of frequencies to be reported and as implied by the Frequency measurement resolution field.

Re(Frequency_value[i]) and Im(Frequency_value[i])

The real (Re) and imaginary (Im) part of the measured amplitude on the frequency measurement point (low to high frequency) in signed integer fixed point format ([±][2 bits].[5 bits]).

RSSI mean value

The mean RSSI as measured on the element pointed to by data measurement type, frame number, and number of frames in the corresponding request. The RSSI is quantized as described in 8.3.9.2. When the AAS feedback response is unsolicited, this value corresponds to preceding frame.

CINR mean value

The mean CINR as measured on the element pointed to by data measurement type, frame number, and number of frames in the corresponding request. The RSSI is quantized as described in 8.3.9.2. When the AAS feedback response is unsolicited, this value corresponds to preceding frame.

8.3.6.5 AAS-BEAM-REQ/RSP message

The AAS Beam Request/Response messages shall be used by a system supporting AAS. This message serves to request channel measurement that will help in adjusting the direction of the adaptive array. This shall be used in conjunction with the AAS preamble. The format for the AAS-BEAM-REQ message is shown in Table 297.

Table 297—AAS Beam request message format

Syntax	Size (bit)	Notes
AAS_BEAM_REQ_message-format(){	—	—
Management message type = 47	8	—
Frame number	8	—
Feedback request number	3	—
Measurement Report Type	2	0b00: AAS_BEAM_IE() Otherwise: *Reserved*
Resolution parameter	3	—
Beam bit mask	4	A bit corresponds to a requested report on the beam
Reserved	4	Shall be set to zero
}	—	—

Frame Number
The 8 LSBs of the frame number in which to perform the measurement.

Feedback Request Counter
Every time an AAS-BEAM-REQ is sent to the SS. Individual counters shall be maintained for each SS. The value 0 shall not be used.

Measurement report type
The report type to be used.

Beam Bit Mask
A bit value of 1 signifies that the corresponding beam is to be reported on.

The format for the AAS-BEAM-RSP message is shown in Table 298.

Frame Number
The 8 LSBs of the frame number in which to perform the measurement. If the message is unsolicited corresponds to the previous frame.

Feedback Request Counter
Counter from the AAS-BEAM-REQ messages to which this is the response. The value 0 indicates that the response is unsolicited.

Measurement report type
The report type to be used.

Beam Bit Mask
A bit value of 1 signifies that the corresponding beam is to be reported on.

RSSI mean value
The mean RSSI as measured on the element pointed to by data measurement type, frame number, and number of frames in the corresponding request. The RSSI is quantized as described in 8.3.9.2. When the AAS feedback response is unsolicited, this value corresponds to preceding frame.

CINR mean value
The mean CINR as measured on the element pointed to by data measurement type, frame number, and number of frames in the corresponding request. The RSSI is quantized as described in 8.3.9.2. When the AAS feedback response is unsolicited, this value corresponds to preceding frame.

Table 298—AAS Beam response message format

Syntax	Size (bit)	Notes
AAS_BEAM_RSP_message-format(){	—	—
Management message type = 48	8	—
Frame number	8	—
Feedback request number	3	—
Measurement Report Type	2	0b00: AAS_BEAM_IE() Otherwise: *Reserved*.
Resolution parameter	3	—
Beam bit mask	4	A bit corresponds to a requested report on the beam
Reserved	4	Shall be set to zero
if (**Measurement Report Type** == 0)	—	—
AAS_AAS_BEAM_IE()	—	—
}	—	—
RSSI mean value	8	—
CINR mean value	8	—
}	—	—

The AAS beam pattern report IE shall be used in conjunction with the AAS_BEAM_REQ/RSP messages. This report IE contain the frequency response of the beams transmitted during the AAS_preamble of the corresponding frame. only the beams which corresponds to the Beam Bit mask are reported. The resolution parameter is interpreted as follows:

resolution parameter == 0b000 => report every 4th subcarrier
resolution parameter == 0b001 => report every 8th subcarrier
resolution parameter == 0b010 => report every 16th subcarrier
resolution parameter == 0b011 => report every 32th subcarrier
resolution parameter == 0b100 => report every 64th subcarrier

Measurement points shall be on the frequencies corresponding to the negative subcarrier offset indices $-N_{used}/2$ plus n times the indicated subcarrier resolution and corresponding to the positive subcarrier offset indices $N_{used}/2$ minus n times the indicated subcarrier resolution where n is a positive integer.

The format for the AAS Beam report IE is shown in Table 299.

Re(Frequency_value_beam[*m*,*n*]) and Im(Frequency_value_beam[*m*,*n*])
The real (Re) and imaginary (Im) part of the measured amplitude on the frequency measurement point *n* (low to high frequency) from beam *m* in signed integer fixed point format ([±][2 bits].[5 bits]).

Table 299—AAS Beam Report IE format

Syntax	Size (bit)	Notes
AAS_AAS_BEAM_IE_message-format(){	—	—
for (*m* = 0; *m* < NumberOfBeams; *m*++){	—	—
for (*n* = 0; *n* < NumberOfFrequencies; *n*++){	—	—
Re {Frequency_value_beam[*m*,*n*]	8	—
Im {Frequency_value_beam[*m*,*n*]	8	—
}	—	—
}	—	—
}	—	—

8.3.6.6 Compressed private maps

The presence of the compressed private DL-MAP format is indicated by the contents of the 2 MSBs of the first data byte. These bits overlay the HT and EC bits of a generic MAC header. When these bits are both set to 1 (an invalid combination for a standard header), the compressed private DL-MAP format is present. A compressed private UL-MAP shall only appear immediately after a compressed private DL-MAP. The presence of a compressed private UL-MAP is indicated by a bit in the compressed private DL-MAP data structure.

A broadcast map, an AAS-DLFP message, a SBCH DL MAP IE, or another private map in a previous frame can point to the compressed private map. Other restrictions of compressed private maps include the following:

— The private map shall be the first message in a PHY burst.
— Private maps shall only be used in the AAS portion of the subframe or within the DL subchannelization zone.
— Private maps are only allowed to use unicast CID values.
— Private maps shall only describe allocations within the AAS portion of the subframe or within the DL subchannelization zone.
— Both UL and DL allocations included in the private map are relative to the next frame.

A modification to the Preamble Time Shift (as defined in 8.3.6.2.7 and 8.3.6.3.7) shall also apply to allocations in subsequent private maps in the private map chain, until modified again or until the end of the private map chain.

The compressed private map is an optional feature that can be negotiated between the SS and BS.

8.3.6.6.1 Compressed private DL-MAP

The compressed private DL-MAP format is presented in Table 300. The message presents the same information as the standard format with one exception. In place of the DL-MAP's 48-bit Base Station ID parameter, the compressed format provides a subset of the full value. When the compressed format is used, the full 48-bit Base Station ID parameter shall be present in the DCD.

Table 300—Compressed Private DL-MAP message format

Syntax	Size (bit)	Notes
Compressed_Private_DL-MAP() {	—	—
Compressed map indicator	2	Set to 0b11 for compressed format
Reserved	1	Shall be set to zero
UL-MAP appended	1	—
Compressed Map Type	1	Shall be set to 0 for compressed private map
Map message length	11	—
DCD Count	8	—
Base Station ID	4	4 LSBs of BSID. The burst specified by the DLFP shall not be decoded if these bits do not match those of the BS on which it is registered
DL IE Count	8	—
for (*i* = 1; *i* <= DL IE count; *i*++){	—	—
SBCH_DLP_MAP_IE()	*variable*	—
}	—	—
if !(bypte boundary) {	—	—
Padding Nibble	4	Padding to reach byte boundary
}	—	—
if (UL-MAP appended) {	—	—
Compressed_Private_UL-MAP( )	*variable*	
}		
HCS	8	—
}	—	—

Compressed map indicator

A value of 0b11 in this field indicates the map message conforms to the compressed format described here. A value of 0b00 in this field indicates the map message conforms to the standard format described in 6.3.2.3.2. Any other value is in error.

UL-MAP appended

A value of 1 indicates a compressed UL-MAP (see 8.3.6.6.2) is appended to the current compressed DL-MAP data structure.

Map message length

This value specifies the length of the compressed map message(s) beginning with the byte containing the Compressed map indicator and ending with the last byte of the compressed DL-MAP message if the UL-MAP appended bit is not set or the lasts byte of the UL-MAP compressed message if the UL-MAP appended bit is set. The length includes the computed 8-bit HCS value.

DCD Count

Matches the value of the configuration change count of the DCD, which describes the DL burst profiles that apply to this map.

DL IE count
A field that holds the number of CID entries in the following list of DL-MAP IEs.

HCS
A HCS value, as defined in 6.3.2.1.1, is appended to the compressed private DL-MAP.

The HCS is computed across all bytes of the compressed map(s) starting with the byte containing the Compressed map indicator and including appended Compressed Private UL-MAP, if present.

8.3.6.6.2 Compressed Private UL-MAP

The compressed private UL-MAP format is presented in Table 301. The message may only appear after a compressed private DL-MAP message to which it shall be appended. The message presents the same information as the standard format with the exception that the generic MAC header and the UL Channel ID are omitted. The HCS is computed across all bytes of the compressed map(s) starting with the byte containing the Compressed map indicator and including appended UL-MAP, if present.

Table 301—Compressed Private UL-MAP message format

Syntax	Size (bit)	Notes
Compressed_Private _UL-MAP() {	—	—
UCD Count	8	—
Allocation Start Time	32	—
while (map data remains) {	—	—
UL-MAP_IE()	*variable*	—
}	—	—
if !(byte boundary) {	—	—
Padding Nibble	4	Padding to reach byte boundary
}	—	—
}	—	—

UCD Count
Matches the value of the Configuration Change Count of the UCD, which describes the UL burst profiles that apply to this map.

Allocation Start Time
Effective start time of the UL allocation defined by the UL-MAP.

8.3.6.7 Reduced private maps

Reduced private maps are based upon the compressed map format; however, they are specifically designed to support a single unicast ID per map. Their use is identical to standard compressed private maps. However, fields have been removed that are not required to support a single ID. The reduced private map shall be pointed to by a broadcast map or private compressed map, which shall define the values of several fields that shall be constant for the duration of the private map chain. The behavior of the compressed map fields that are not present in the reduced private map are described in the following list:

a) *DCD Count.* Optionally included. Only required if DCD count changes.
b) *Base Station ID.* Acquired by the map that initiated the private map chain. Assumed constant for the duration of the private map chain.
c) *CID.* Only required in first map of private map chain.
d) *UCD Count.* Optionally included. Only required in first UL map of private map chain.
e) *Allocation Start Time.* UL start time relative to TTG plus an integer number of symbol times.

8.3.6.7.1 Reduced private DL-MAP

The Reduced private DL-MAP format is presented in Table 302. The reduced private DL-MAP message eliminates the fields that are not relevant since the message is targeted to a single CID.

Table 302—Reduced private DL-MAP message format

Syntax	Size (bit)	Notes
Reduced Private DL_MAP()	—	—
Compressed Map Indicator	2	Set to 0b11 for compressed format
Reserved	1	Shall be set to zero
UL-MAP appended	1	—
Compressed Map Type	1	Shall be set to 1 for reduced private map
CID Included	1	1 = CID included. The CID shall be included in the first compressed private MAP if it was pointed to by a DL-MAP IE with a multicast CID
DCD Count Included	1	1 = DCD Count included. The DCD count is expected to be the same as in the broadcast map that initiated the private map chain. The DCD count can be included in the private map if it changes
PHY Modification Included	1	1 = included.
Reserved	1	Shall be set to zero
Map message length	11	—
if (CID Included) {	—	—
CID	16	—
}	—	—
if (DCD Count Included) {	—	—
DCD Count	8	—
}	—	—
if (PHY modification Included) {	—	—
Preamble Time Shift	8	Updated preamble time shift to be used starting with the next frame
}	—	—

Table 302—Reduced private DL-MAP message format *(continued)*

Syntax	Size (bit)	Notes
Preamble Present	1	—
Start Time	11	—
Duration	10	—
Subchannel Index	5	—
Reserved	1	Shall be set to zero
If (UL-MAP appended) {	—	For the AMC permutation (2 x 3 type)
Reduced Private UL-MAP()	*variable*	—
}	—	—
HCS	8	—
}	—	—

Map message length
Specifies the length of the reduced map message(s) beginning with the byte containing the Compressed map indicator, including the Reduced Private UL maps if present, and ending with the last byte of the Reduced Private DL-MAP message, the computed 8-bit HCS value.

Compressed map indicator
A value of 0b11 in this field indicates the presence of a compressed map.

UL-MAP appended
A value of 1 indicates a reduced compressed private UL-MAP (see 8.3.6.7.2) is appended to the current private DL-MAP data structure.

CID Included
Specifies if a CID is included. The CID shall be included in the first compressed private MAP if it was pointed to by a DL-MAP IE with a multicast CID.

DCD Count Included
Specifies if a DCD count is included. DCD Count is only required if the DCD count is changed.

PHY Modification Included
Indicates if a preamble modifier is included.

Connection Identifier (CID)
Represents the assignment of the IE to a unicast address.

Preamble Time Shift
The preamble time shift for subsequent DL allocations, as defined in 8.6.3.3.7.

DCD Count
Matches the value of the configuration change count of the DCD, which describes the DL burst profiles that apply to this map.

DIUC
DIUC used for the burst.

Preamble Present
If set, the indicated burst shall start with the short preamble.

Start Time
Indicates the start time, in units of symbol duration, relative to the beginning of the next DL frame (including preamble). The time instants indicated by the Start Time values are the transmission times of the first symbol of the burst including preamble (if present).

Duration

Indicates the duration, in units of OFDM symbols, of the allocation. The duration is inclusive of the preamble contained in the allocation.

HCS

An HCS value, as defined in 6.3.2.1.1, is appended to the end of the reduced map(s) data. The HCS is computed across all bytes of the reduced map(s) starting with the byte containing the Compressed map indicator and including appended Reduced Private UL-MAP(s), if present.

8.3.6.7.2 Reduced private UL-MAP

The Reduced private UL-MAP format is presented in Table 303. The message may only appear after a Reduced private DL-MAP message to which it shall be appended.

Table 303—Reduced private UL-MAP message format

Syntax	Size (bit)	Notes
Reduced Private UL-MAP()	—	—
UCD Count Included	1	1 = UCD Count Included. The UCD count should be included in the first allocation of a private map chain.
PHY Modification Included	1	1 = Preamble time shift included.
Power Control Included	1	1 = Power control value included.
if (UCD Count Included) {	—	—
UCD Count	8	—
}	—	—
if (PHY modification Included) {	—	—
Preamble Time Shift	8	Updated preamble time shift to be used starting with the next frame.
}	—	—
if (Power Control Included) {	—	—
Power Control	8	Signed integer in 0.25 dB units.
}	—	—
UIUC	4	—
Start Time	11	—
Duration	10	—
Subchannel Index	5	—
Midamble Repetition Interval	2	—
Reserved	5	Set to zero.
}	—	—

UCD Count Included
Indicates if UCD Count is included. This should be included in the first UL map of a private map chain.

Phy Modification Included
Indicates if a preamble modifier is included.

Power Control Included
Indicates if an SS power control byte is included.

Preamble Time Shift
The preamble time shift for subsequent UL allocations, as defined in 8.6.3.3.7.

Power Control
The change in Tx power level that the SS should apply starting on the next frame.

UCD Count
Matches the value of the configuration change count of the UCD, which describes the UL burst profiles that apply to this map.

UIUC
UIUC used for the burst.

Start Time
Indicates the start time of the allocation, in units of symbol duration, referenced to the beginning of the next frame and consists of an integer symbol offset specified here, as well as the addition of the TTG known from DCD messages. If TTG is not present in the DCD (for FDD) it is assume to be zero.

Duration
Indicates the duration, in units of OFDM symbols, of the allocation. The duration is inclusive of the preamble contained in the allocation.

Subchannel Index
See Table 248.

Midamble Repetition Interval
Indicates the preamble repetition interval in OFDM symbols, as defined in 8.3.6.3.

8.3.7 Control mechanisms

8.3.7.1 Synchronization

8.3.7.1.1 Network synchronization

For TDD and FDD realizations, it is recommended (but not required) that all BSs be time synchronized to a common timing signal. In the event of the loss of the network timing signal, BSs may continue to operate and shall automatically resynchronize to the network timing signal when it is recovered. The synchronizing reference shall be a 1 pps timing pulse. A 10 MHz frequency reference may also be used. These signals are typically provided by a GPS receiver.

For both FDD and TDD realizations, frequency references derived from the timing reference may be used to control the frequency accuracy of BSs provided that they meet the frequency accuracy requirements of 8.3.12. This applies during normal operation and during loss of timing reference.

8.3.7.2 Ranging

There are two types of ranging processes—initial ranging (see 6.3.9.5) and periodic ranging (see 6.3.10). Initial ranging and power are performed during two phases of operation; during (re)registration and when synchronization is lost; and secondly, during transmission on a periodic basis. Initial ranging uses the initial ranging contention-based interval, which requires a long preamble. The periodic ranging uses the regular UL burst.

During registration, a new subscriber registers during the random access channel, and, if successful, it is entered into a ranging process under control of the BS. The ranging process is cyclic in nature where default time and power parameters are used to initiate the process followed by cycles where (re)calculated parameters are used in succession until parameters meet acceptance criteria for the new subscriber. These parameters are monitored, measured and stored at the BS, and transmitted to the subscriber unit for use during normal exchange of data. During normal exchange of data, the stored parameters are updated in a periodic manner based on configurable update intervals to ensure that changes in the channel can be accommodated. The update intervals shall vary in a controlled manner on a subscriber unit by subscriber unit basis. Initial ranging transmissions shall use a long preamble and the most robust mandatory burst profile.

Ranging on re-registration follows the same process as new registration.

Regardless of duplexing type, the appropriate duration of the initial ranging slot used for initial system access depends on the intended cell radius.

SSs that compute their $P_{TX\_IR\_max}$ to exceed their maximum power level and SSs that have attempted initial ranging with the maximum power level using RNG-REQ may, if the BS supports subchannelization, attempt initial ranging in an initial ranging slot using the burst format described in this subclause. This signal is referred to as the subchannelized initial ranging signal and is indicated in Figure 213 and Figure 214.

The SS shall transmit the long preamble as defined in 8.3.3.6. This shall be followed by two identical symbols containing a subchannelized preamble, on a single randomly selected subchannel. Note that the long preamble is transmitted on the entire bandwidth while the subchannelized preamble is transmitted on 1/16 of the bandwidth.

The long preamble and the subchannelized preamble shall be transmitted using the same total power. As a result the spectral density of the long preamble shall be lower by a factor of 16 (about 12dB) than the power spectral density of the subchannelized preamble.

The BS need only detect that energy is sent on a single subchannel and may respond by allocating a single subchannel identifying the SS by the Tx opportunity, frame number, and ranging subchannel in which the transmission was received. The allocation is accomplished by sending an UL-MAP IE containing a Subchannelized Network Entry IE (see 8.3.6.3.3) and transmitted using the Initial Ranging CID, as shown in Figure 214. The allocated bandwidth shall be big enough to contain at least one RNG-REQ message.

A SS attempting subchannelized initial ranging shall use its maximum power setting for the initial ranging burst.

8.3.7.2.1 Initial ranging in AAS systems

A BS supporting the AAS option may allocate in the UL subframe an AAS alert slot for AAS SSs that have to initially alert the BS of their presence. This period shall be marked as initial ranging (UIUC = 1), but shall be marked by an AAS Initial Ranging CID so that no non-AAS subscriber (or AAS subscriber that can decode the UL-MAP message) uses this interval for initial ranging. Additionally, this period shall be marked using AAS map (see Table 290). The SS shall transmit the long preamble as defined in 8.3.3.6. This shall be followed by a burst carrying the AAS_NW_ENTRY_REQ message (see Table 304). This burst shall use the most robust mandatory coding method (BPSK-1/2).

The BS may respond to the network entry request by transmitting a RNG-RSP message indicating the required changes to the ranging parameters. The SS is identified by specifying the Tx opportunity and the entry code of the AAS_NW_ENTRY_REQ message. When transmitting the response, the BS may use the feedback information embedded in the AAS_NW_ENTRY_REQ to direct the beam to the SS.

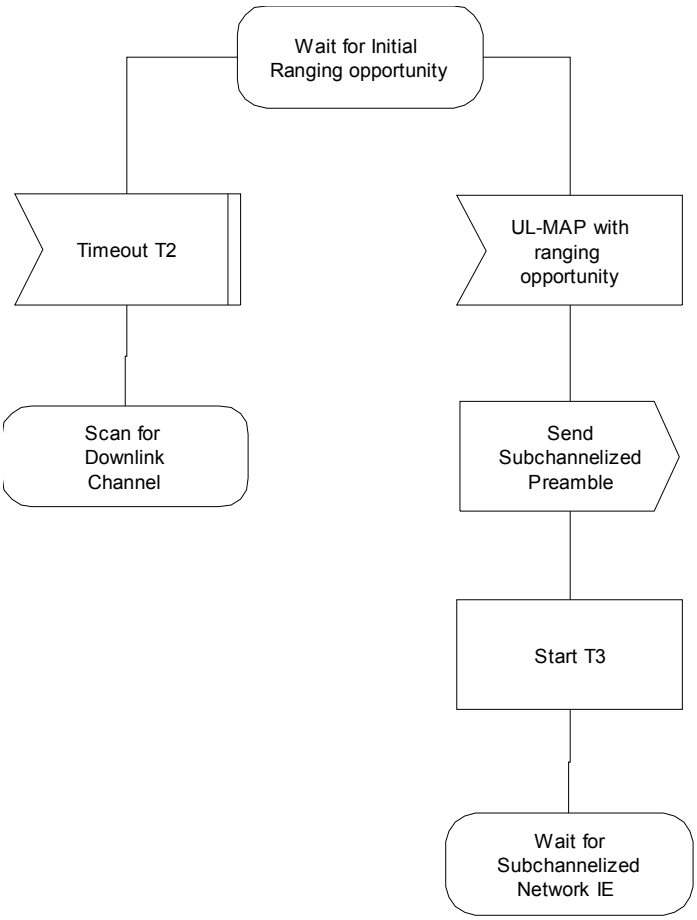

Figure 213—Subchannelized initial ranging—SS (part 1)

The BS may additionally assign subchannelized AAS alert slot for SSs supporting subchannelization. AAS SSs that have attempted initial ranging with the maximum power level using AAS_NW_ENTRY_REQ may attempt initial ranging in the subchannelized AAS alert slot. The SS shall transmit the long preamble as defined in 8.3.3.6. This shall be followed by subchannelized burst carrying the AAS_SBCH_NW_ENTRY_REQ message (see Table 305). This message shall be sent on the subchannel indicated by the UL-MAP information element used to allocate the ranging period.

Network entry code
A 4-bit number selected at random.

Measurement frame index
The 4 LSBs of the frame number to which the beam measurements refer.

Re(beam_value[*m*]) and Im(beam_value[*m*])
The real (Re) and imaginary (Im) part of the measured amplitude of beam m in signed integer fixed point format ([±][2 bits].[5 bits]). These values are measured on the AAS preamble pointed to by measurement frame index. A single value shall be used for the entire bandwidth.

RSSI
The RSSI of the AAS preamble information pointed to by measurement frame index. This value is averaged over the four beams. The RSSI value shall be quantized as in 8.3.9.2.

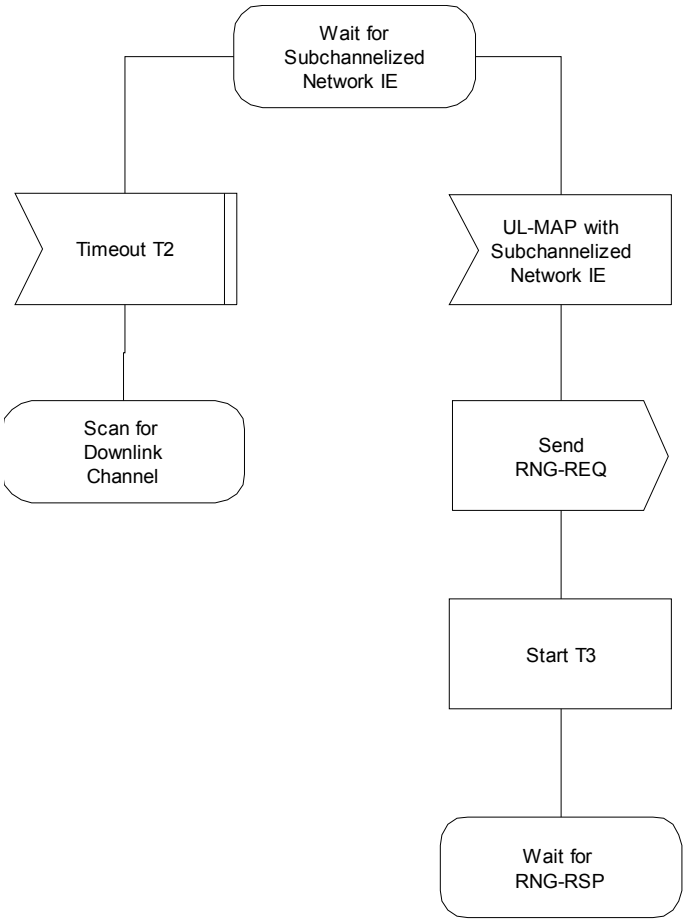

Figure 214—Subchannelized initial ranging—SS (part 2)

Network entry code

A 4-bit number selected at random.

Phase offset 1…3

The phase offsets that are required to be performed by the BS, in order to from the beam towards the SS. The phase offsets are estimated using the AAS preamble and are given relative to the first beam.

Measurement frame index

Indicates whether the phase information corresponds to the previous frame or to the one before the previous frame.

RSSI

The RSSI of the AAS preamble information pointed to by measurement frame index. This value is averaged over the four beams. This value shall be quantized in 2 dB increments, ranging from –110 dBm (encoded 0x00) to –48 dBm (encoded 0x1F). Values outside this range shall be assigned the closest extreme value within the scale.

8.3.7.3 Bandwidth requesting

There may be two types of REQ Regions in a frame. These two types are REQ Region-Full and REQ Region-Focused.

Table 304—OFDM AAS_NW_ENTRY_REQ format

Syntax	Size (bit)	Notes
AAS_NW_ENTRY_REQ(){	—	—
Network entry code	4	A randomly selected code.
Measurement frame index	4	The 4 LSBs of the frame number to which the beam measurements refer.
for (i = 0; i < 4; i++){	—	—
Re(**beam_value[*i*]**)	8	—
Im(**beam_value[*i*]**)	8	—
}	—	—
RSSI mean value	8	—
HCS	8	An 8-bit header check sequence, calculated as specified in Table 5.
}	—	—

Table 305—OFDM SBCH_AAS_NW_ENTRY_REQ format

Syntax	Size (bit)	Notes
SBCH_AAS_NW_ENTRY_REQ(){	—	—
Network entry code	4	A randomly selected code.
Phase offset 1	4	The mean phase offset of beam 1 relative to beam 0. 4-bit signed number, in units of 360°/16.
Phase offset 2	4	The mean phase offset of beam 2 relative to beam 0. 4-bit signed number, in units of 360°/16.
Phase offset 3	4	The mean phase offset of beam 3 relative to beam 0. 4-bit signed number, in units of 360°/16.
Measurement frame index	1	0: Phase information corresponds to beams in previous frame 1: Phase information corresponds to beams in one before previous frame.
RSSI mean value	5	—
Reserved	2	Shall be set to zero
HCS	8	An 8-bit header check sequence, calculated as specified in Table 5.
}	—	—

In a REQ Region-Full, when subchannelization is not active, each Tx opportunity shall consist of a short preamble and one OFDM symbol using the most robust mandatory coding method (BPSK-1/2). When subchannelization is active, the allocation is partitioned into Transmission Opportunities (TOs) both in

frequency and in time. The width (in subchannels) and length (in OFDM symbols) of each transmission opportunity (TO) is defined in the UCD message defining (see Table 570). The transmission of an SS shall contain a subchannelized preamble corresponding to the TO chosen, followed by data OFDM symbols using the most robust mandatory coding method (BPSK-1/2).

In a REQ Region-Focused, a station shall send a short code over a Tx opportunity that consists of four subcarriers by two OFDM symbols. Each Tx opportunity within a frame shall be indexed by consecutive Tx opportunity indices. The first occurring Tx opportunity shall be indexed 0.

All SS shall be capable of the full contention transmission. Capability of the focused contention transmission is optional. The SS shall follow the backoff procedure as described in 6.3.8.

8.3.7.3.1 Parameter selection

The SS shall examine the UL_MAP message for a future frame and select (in accordance with 6.3.8) a future REQ Region during which to make its request. If Focused Contention Supported = 1 was returned by the BS in SBC-RSP message during SS initialization and if the SS is capable of focused contention, it may choose either a REQ Region-Full or REQ Region-Focused. Otherwise, it shall choose a REQ Region-Full.

If the chosen REQ Region is a REQ Region-Focused, the SS shall also select a contention code from Table 306 and similarly a contention channel from Table 307. The contention channel shall be selected from Table 306 based upon a random selection with equal probability among the group of possible contention channels that are consistent with the allocation, as indicated in Table 307. The indices {–100 to +100} in the body of Table 307 refer to the subcarrier indices as defined in 8.3.2.4. The number of contention codes that can be used by a subchannelized capable SS is denoted by C_{SE}. The contention code shall be selected at random with equal probability from the appropriate subset of codes in Table 306 according to the value of C_{SE}.

If the BS supports subchannelization, the last C_{SE} contention codes shall only be used by subchannelization-enabled SSs that wish to receive a subchannelized allocation. In response, the BS may provide the requested allocation as a subchannelized allocation; may provide the requested allocation as a full (default) allocation, or may provide no allocation at all. The value of C_{SE} is transmitted in the UCD channel encoding TLV messages. The default value of C_{SE} is 0.

A BS that supports Focused Contention may allocate the Focused Contention region based upon the BSID, thereby reducing the probability of interference from SSs operating in nearby cells operating on the same frequency.

Any Focused Contention region allocation shall be restricted to an even Subchannel Index (meaning that it be no finer than a 1/8 subchannel—see Table 248), providing between 6 and 48 contention channels.

8.3.7.3.2 Full Contention transmission

If the chosen REQ Region is a REQ Region-Full, the SS shall transmit the short preamble as defined in 8.3.3.6, followed by a BR MAC header as defined in 6.3.2.1.2.1.1.

If the Full Contention allocation appears in subchannelized region, the allocation is partitioned into transmission opportunities (TOs) both in frequency and in time. The width (in subchannels) and length (in OFDM symbols) of each transmission opportunity is defined in the UCD message. The transmission of an SS shall contain a subchannelized preamble corresponding to the TO chosen, followed by data OFDM symbols using the most robust mandatory coding method (BPSK-1/2).

Table 306—OFDM Contention codes

Contention code index	Bit 0	Bit 1	Bit 2	Bit 3
0	1	1	1	1
1	1	–1	1	–1
2	1	1	–1	–1
3	1	–1	–1	1
4	–1	–1	–1	–1
5	–1	1	–1	1
6	–1	–1	1	1
7	–1	1	1	–1

Table 307—OFDM Contention channels

Contention channel index	Frequency offset index 0	Frequency offset index 1	Frequency offset index 2	Frequency offset index 3	Contention Channel belongs to subchannel (See Table 248)
0	–100	–37	1	64	0b00010
1	–99	–36	2	65	0b00010
2	–98	–35	3	66	0b00010
3	–97	–34	4	67	0b00010
4	–96	–33	5	68	0b00010
5	–95	–32	6	69	0b00010
6	–94	–31	7	70	0b00110
7	–93	–30	8	71	0b00110
8	–92	–29	9	72	0b00110
9	–91	–28	10	73	0b00110
10	–90	–27	11	74	0b00110
11	–89	–26	12	75	0b00110
12	–87	–50	14	51	0b01010
13	–86	–49	15	52	0b01010
14	–85	–48	16	53	0b01010
15	–84	–47	17	54	0b01010
16	–83	–46	18	55	0b01010
17	–82	–45	19	56	0b01010
18	–81	–44	20	57	0b01110
19	–80	–43	21	58	0b01110

Table 307—OFDM Contention channels *(continued)*

Contention channel index	Frequency offset index 0	Frequency offset index 1	Frequency offset index 2	Frequency offset index 3	Contention Channel belongs to subchannel (See Table 248)
20	–79	–42	22	59	0b01110
21	–78	–41	23	60	0b01110
22	–77	–40	24	61	0b01110
23	–76	–39	25	62	0b01110
24	–75	–12	26	89	0b10010
25	–74	–11	27	90	0b10010
26	–73	–10	28	91	0b10010
27	–72	–9	29	92	0b10010
28	–71	–8	30	93	0b10010
29	–70	–7	31	94	0b10010
30	–69	–6	32	95	0b10110
31	–68	–5	33	96	0b10110
32	–67	–4	34	97	0b10110
33	–66	–3	35	98	0b10110
34	–65	–2	36	99	0b10110
35	–64	–1	37	100	0b10110
36	–62	–25	39	76	0b11010
37	–61	–24	40	77	0b11010
38	–60	–23	41	78	0b11010
39	–59	–22	42	79	0b11010
40	–58	–21	43	80	0b11010
41	–57	–20	44	81	0b11010
42	–56	–19	45	82	0b11110
43	–55	–18	46	83	0b11110
44	–54	–17	47	84	0b11110
45	–53	–16	48	85	0b11110
46	–52	–15	49	86	0b11110
47	–51	–14	50	87	0b11110

8.3.7.3.3 Focused Contention transmission

The REQ Region-Focused bandwidth requesting mechanism consists of two phases. The Phase-1 is that an SS requesting bandwidth sends a signal to the BS in the UL TO of REQ Region Focused identified by UIUC = 3. One REQ Region Focused UL interval with UIUC = 3 shall be four subcarriers by two OFDM symbols. The Phase-1 bandwidth requesting signal transmission is described in this subclause. Following the Phase-1,

the BS may include in its UL-MAP an allocation for the SS using UIUC = 4 and the Focused Contention IE as defined in Table 286. The SS is identified in this Focused Contention IE by the frame number index, Tx opportunity index, contention channel index, and contention code index that the SS used to send the Phase-1 bandwidth requesting signal. The Phase-2 is that the SS requesting bandwidth responds to this UL-MAP allocation with a BR MAC header as defined in 6.3.2.1.2.1.1. The Phase-2 UL interval with UIUC = 4 shall consist of a short preamble and shall have the duration indicated by the relevant field of the UL-MAP_IE() and shall use the most robust mandatory burst profile.

If the chosen REQ Region is a REQ Region-Focused, after choosing its four parameters, the SS shall transmit, during the chosen Tx opportunity in the chosen frame, four subcarriers that comprise the chosen contention channel. The amplitude of all other subcarriers shall be zero.

During both OFDM symbols, the amplitude of each of the four subcarriers shall be boosted somewhat above its *normal* amplitude, i.e., the amplitude used during a noncontention OFDM symbol, including the current power-control correction. The boost in dB shall equal the value of the Focused Contention Power Boost parameter in the current UCD.

During the first OFDM symbol of the Tx opportunity, the phase of the four subcarriers is not specified.

During the second OFDM symbol of the Tx opportunity, the phases shall depend on the corresponding bit in the chosen contention code, and the phase transmitted during the first OFDM symbol on the same subcarrier. If the code bit is +1, the phase shall be the same as that transmitted during the first OFDM symbol. If the code bit is –1, the phase shall be inverted, 180 degrees with respect to the phase transmitted during the first OFDM symbol.

8.3.7.4 Power control

As with frequency control, a power control algorithm shall be supported for the UL channel with both an initial calibration and periodic adjustment procedure without loss of data. The objective of the power control algorithm is to bring the received power density from a given subscriber to a desired level. The received power density is defined as total power received from a given subscriber divided by the number of active subcarriers. When subchannelization is not employed, the number of active subcarriers is equal for all the subscribers and the power control algorithm shall bring the total received power from a given subscriber to the desired level. The BS shall be capable of providing accurate power measurements of the received burst signal. This value can then be compared against a reference level, and the resulting error can be fed back to the SS in a calibration message coming from the MAC. The power control algorithm shall be designed to support power attenuation due to distance loss or power fluctuations at rates to 30 dB/second with depths of at least 10 dB. The exact algorithm implementation is vendor-specific. The total power control range consists of both a fixed portion and a portion that is automatically controlled by feedback. The power control algorithm shall take into account the interaction of the RF power amplifier with different burst profiles. For example, when changing from one burst profile to another, margins should be maintained to prevent saturation of the amplifier and to prevent violation of emissions masks.

8.3.7.4.1 Closed-loop power control mode

When subchannelization is employed in the UL, the SS shall maintain the same transmitted power density unless the maximum power level is reached. In other words, when the number of active subchannels allocated to a user is reduced, the total transmitted power shall be reduced proportionally by the SS, without additional power control messages. When the number of subchannels is increased the total transmitted power shall also be increased proportionally. However, the transmitted power level shall not exceed the maximum levels dictated by signal integrity considerations and regulatory requirements. SSs shall report the maximum available power and the current average transmitted power.

When subchannelization is employed in the DL, the BS may vary the power of individual subchannelized allocations to improve the link budget to particular MS's. The transmitted power level shall not exceed the maximum levels dictated by signal integrity considerations and regulatory requirements. Within a given DL subchannelized allocation the spectral flatness requirement as specified in 8.3.10.1.1 applies to all the energized subcarriers.

Explicitly, let PSDref be the reference level of power spectrum density of the SS. This can only be changed by power control messages. The Tx power of the SS is defined as current tx power = min((number used subchannels) × PSDref, maximum available power). Thus, in the case of saturation, the reference level of power spectrum density shall not be changed.

SSs shall report the maximum available power and the current transmitted power. These parameters may be used by the BS for optimal assignment of coding schemes and modulations and also for optimal allocation of subchannels. The algorithm is vendor-specific. These parameters are reported in the SBC-REQ message. The current transmitted power shall also be reported in the REP-RSP message if the relevant flag in the REP-REQ message has been set.

The current transmitted power is the power of the burst that carries the message. The maximum available power is reported for BPSK, QPSK QAM16, and QAM64 constellations. The current transmitted power and the maximum power parameters are reported in dBm. The parameters are quantized in 0.5 dBm steps ranging from –64 dBm (encoded 0x00) to 63.5 dBm (encoded 0xFF). Values outside this range shall be assigned the closest extreme. SSs that do not support QAM64 shall report the value of 0x00 in the maximum QAM64 power field.

8.3.7.4.2 Open loop power control mode (optional)

When the open-loop power control is supported and the UL power control mode is changed to open-loop power control by PMC_RSP, the power per a subcarrier shall be maintained for the UL transmission as follows.

This open-loop power control shall be applied for all the UL bursts.

$$P_{EIRP}(dBm) = PL + CNR + R + (N + I) + 10\log_{10}(BW_{sch}) + Offset\_SS_{perSS} + Offset\_BS_{perSS} \quad (39)$$

where

P_{EIRP} is the Tx effective isotropic radiated power (EIRP) level, expressed in dBm, per subcarrier for the current transmission. It includes the MS Tx antenna gain and its related coupling losses.

PL is the estimated average current UL path loss.

CNR is the normalized Carrier to Noise Ratio (per subcarrier) for the given modulation, FEC and the related Convolutional Coding scheme used for the current transmission as presented in Table 308. The normalized Carrier to Noise Ratio can be modified by UCD (Normalized C/N override).

R is the number of repetitive sequences used by the receiving circuitry employed to determine the path losses.

BW_{sch} is the bandwidth occupied by an OFDM subcarrier, expressed in Hz.

$N+I$ is the estimated normalized average power level (dBm) of the noise and interference per subcarrier at the Rx antenna port of the receiving side (BS), for $BW = 1$ Hz. It does not include the equivalent gain of the Rx antenna and its related coupling losses.

OffsetMS_UL represents the correction term for SS-specific power offset. Practically it amounts to the desired Fade Margin for the respective UL link. It is controlled by the MS and initially is set to zero.

OffsetBS_UL represents the MS-specific power offset, controlled by the BS through the power control messages. When OffsetBS_UL is set through the PMC_RSP message, it shall include the equivalent BS Rx antenna gain, including its related coupling losses, measured at the antenna port of the equipment.

Table 308—Normalized CINR per modulation (BER = 1e-6)

Modulation/FEC-CC Rate	Normalized CNR (dB)
BPSK-1/2	13.9
QPSK-1/2	16.9
QPSK-3/4	18.65
16-QAM-1/2	23.7
16-QAM-3/4	25.45
64-QAM-1/2	29.7
64-QAM-3/4	31.45

The normalized CNR is calculated based on noise figure = 7 dB and modulation implementation losses = 5 dB.

The estimated average current UL propagation loss, PL_{UL}, shall be calculated based on the total power received on the active subcarriers of the frame preamble, referenced to the *BS_EIRP* parameter sent by the BS.

Table 308 returns the default normalized CNR values per modulation. The operating parameters *BS_EIRP* and *NI* are signaled by a DCD message (see Table 575 in 11.4.1).

Additionally, the BS controls the $Offset\_BS_{perSS}$ using PMC_RSP message (6.3.2.3.53) to override the $Offset\_BS_{perSS}$ value or using RNG-RSP (6.3.2.3.6), FPC message (6.3.2.3.34), Power Control IE (8.3.6.3.5) to adjust the $Offset\_BS_{perSS}$ value. The accumulated power control value shall be used for $Offset\_BS_{perSS}$.

The $Offset\_BS_{perSS}$ can be updated using relative or fixed form (as a function of the relevant adjustment commands used). Fixed form is used when the parameter is obtained from a PMC_RSP message. In this case, the MS should replace the old $Offset\_SS_{perSS}$ value by the new $Offset\_SS_{perSS}$ sent by the BS. With all other messages mentioned in the previous paragraph, relative form is used. In this case, MS should increase and decrease the $Offset\_SS_{perSS}$ according to the offset value sent by BS.

The actual power setting shall be quantized to the nearest implementable value, subject to the specification. For each transmission, the SS shall limit the power, as required to satisfy the spectral masks and EVM requirements.

The UL open-loop power control may be passive or active.

In passive UL open-loop power control, the MS shall set $Offset\_SS_{perSS}$ to zero and modify the TX power value using Equation (39).

In active UL open-loop power control, the SS may adjust $Offset\_SS_{perSS}$ value within a range as shown in Equation (40).

$$Offset\_\text{Bound}_{lower} \le Offset_{perSS} \le Offset\_\text{Bound}_{upper} \quad (40)$$

where

$Offset\_Bound_{upper}$ is the upper bound of $Offset\_SS_{perSS}$
$Offset\_Bound_{lower}$ is the lower bound of $Offset\_SS_{perSS}$

8.3.8 Tx diversity: space-time coding (STC) (optional)

STC, in some cases also termed space-time transmit diversity (STTD), may be used on the DL to provide higher order (space) Tx diversity (see Alamouti [B1]).

There are two Tx antennas on the BS side and one reception antenna on the SS side. This scheme requires Multiple Input Single Output channel estimation. Decoding is very similar to maximum ratio combining.

Figure 215 shows STC insertion into the OFDM chain. Each Tx antenna has its own OFDM chain, but they have the same Local Oscillator for synchronization purposes.

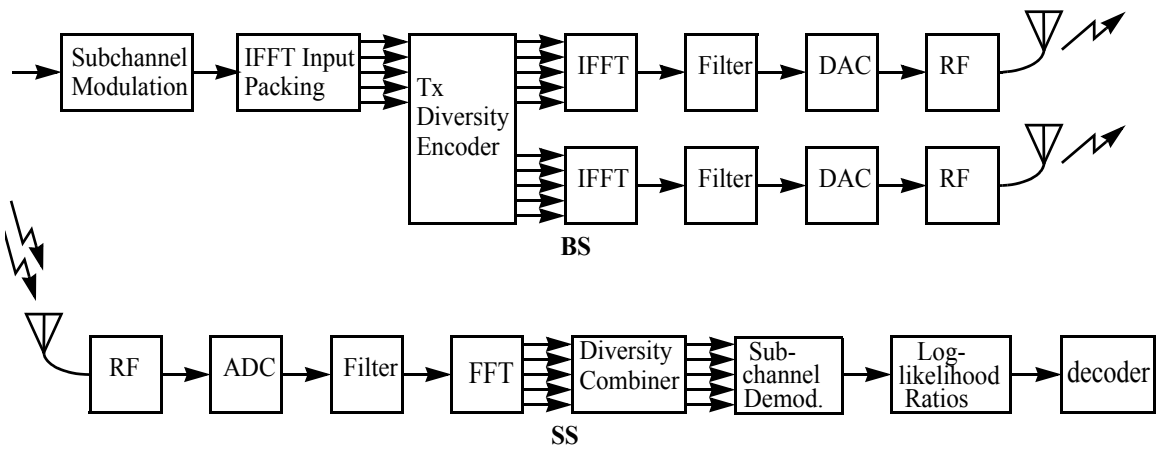

Figure 215—Illustration of STC

Both antennas transmit in the same time two different OFDM data symbols. Transmission is performed twice to decode and to get second order diversity. Time domain (Space-Time) repetition is used.

8.3.8.1 Multiple input single output channel estimation and synchronization

Both antennas transmit in the same time, and they share the same Local Oscillator. Thus, the received signal has exactly the same auto-correlation properties as for a single antenna. So, time and frequency coarse and fine estimation can be performed in the same way as for a single antenna. The scheme requires MISO channel estimation, which is provisioned by inserting an STC preamble, transmitted from both antennas, using the STC IE (see 8.3.6.2.5 and 8.3.3.6).

8.3.8.2 STC encoding

The basic scheme (see Alamouti [B1]) transmits two complex symbols s_0 and s_1, using the multiple input single output channel (two Tx, one Rx) twice with channel vector values h_0 (for antenna 0) and h_1 (for antenna 1).

First channel use: Antenna 0 transmits s_0, antenna 1 transmits s_1.
Second channel use: Antenna 0 transmits $-s_1^*$, antenna 1 transmits s_0^*.

Receiver gets r_0 (first channel use) and r_1(second channel use) and computes s_0 and s_1 estimates:

$$\hat{s}_0 = h_0^* \cdot r_0 + h_1 \cdot r_1^* \tag{41}$$

$$\hat{s}_1 = h_1^* \cdot r_0 - h_0 \cdot r_1^* \tag{42}$$

These estimates benefit from second order diversity as in the 1Tx-2Rx Maximum Ratio Combining scheme. OFDM symbols are taken by pairs. The precoding operation, and consecutively the receive decoding [as described in Equation (41) and Equation (42)], is applied independently to same-numbered subcarriers in two consecutive OFDM data symbols. Note that the two OFDM symbols may belong to different PHY bursts and even use different constellations. An individual PHY burst may contain any integer number of symbols. The aggregate duration of all PHY bursts following the last STC preamble or between any two STC preambles shall be a multiple of 2.

On a given pilot subcarrier, the same pilot symbol is used for the STC block. If the STC block consists of OFDM symbol k and $k+1$ and p_s is the pilot symbol for pilot subcarrier s as derived for OFDM symbol k from 8.3.3.4.2, then the modulation on pilot subcarrier s during OFDM symbol k shall be p_s on both antenna 0 and 1. During OFDM symbol $k+1$, it shall be $-p_s$ on antenna 0 and p_s on antenna 1.

Figure 216 shows the STC scheme (note that only pilot subcarrier –88 is depicted).

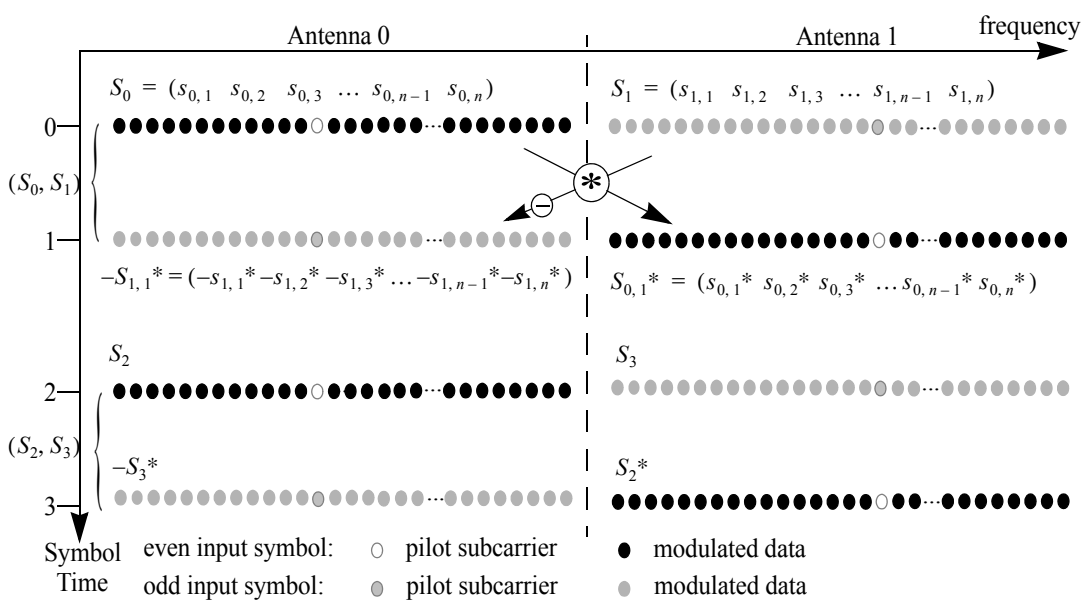

Figure 216—STC usage with OFDM

8.3.8.3 STC decoding

The receiver waits for two symbols, and combines them on a subcarrier basis according to Equation (41) and Equation (42) in 8.3.8.2.

8.3.9 Channel quality measurements

8.3.9.1 Introduction

RSSI and CINR signal quality measurements and associated statistics can aid in such processes as BS selection/assignment and burst adaptive profile selection. As channel behavior is time-variant, both mean and standard deviation are defined. Implementation of the RSSI and CINR statistics and their reports is mandatory.

The process by which RSSI measurements are taken does not necessarily require receiver demodulation lock; for this reason, RSSI measurements offer reasonably reliable channel strength assessments even at low signal levels. On the other hand, although CINR measurements require receiver lock, they provide information on the actual operating condition of the receiver, including interference and noise levels, and signal strength.

8.3.9.2 RSSI mean and standard deviation

When collection of RSSI measurements is mandated by the BS, an SS shall obtain an RSSI measurement from the OFDM DL long preambles. From a succession of RSSI measurements, the SS shall derive and update estimates of the mean and the standard deviation of the RSSI, and report them via REP-RSP messages.

Mean and standard deviation statistics shall be reported in units of dBm. To prepare such reports, statistics shall be quantized in 1 dB increments, ranging from –40 dBm (encoded 0x53) to –123 dBm (encoded 0x00). Values outside this range shall be assigned the closest extreme value within the scale.

The method used to estimate a single RSSI measurement is left to individual implementation, but the relative accuracy of a single signal strength measurement, taken from a single message, shall be ± 2 dB, with an absolute accuracy of ± 4 dB. The specified accuracy shall apply to the range of RSSI values starting from 6 dB below the sensitivity level of the most robust mode or –123 dBm (whichever is higher) up to –40 dBm. In addition, the range over which these single-message measurements are measured should extend 3 dB on each side beyond the –40 dBm to –123 dBm limits for the final averaged statistics that are reported.

One possible method to estimate the RSSI of a signal of interest at the antenna connector is given by Equation (43).

$$RSSI = 10^{-\frac{G_{rf}}{10}} \frac{1.2567 \times 10^4 V_c^2}{(2^{2B})R} \left(\frac{1}{N} \sum_{n=0}^{N-1} \left| Y_{I \text{ or } Q}[k, n] \right| \right)^2 \text{mW} \tag{43}$$

where

B is the ADC precision, number of bits of ADC
R is the ADC input resistance [Ohm]
V_c is the ADC input clip level [Volts]
G_{rt} is the analog gain from antenna connector to ADC input
$Y_{I \text{ or } Q}[k,n]$ is the nth sample at the ADC output of I or Q-branch within signal k
N is the number of samples

The (linear) mean RSSI statistics (in mW), derived from a multiplicity of single messages, shall be updated using Equation (44).

$$\hat{\mu}_{RSSI}[k] = \begin{cases} R[0] & k = 0 \\ (1-\alpha_{avg})\hat{\mu}_{RSSI}[k-1] + \alpha_{avg}R[k] & k > 0 \end{cases} \text{mW} \tag{44}$$

where k is the time index for the message (with the initial message being indexed by $k = 0$, the next message by $k = 1$, etc.), $R[k]$ is the RSSI in mW measured during message k, and α_{avg} is an averaging parameter specified by the BS. The mean estimate in dBm shall then be derived from Equation (45).

$$\hat{\mu}_{RSSI\ \text{dBm}}[k] = 10\log(\hat{\mu}_{RSSI}[k]) \quad \text{dBm} \tag{45}$$

To solve for the standard deviation in dB, the expectation-squared statistic shall be updated using Equation (46),

$$\hat{x}^2_{RSSI}[k] = \begin{cases} |R[0]|^2 & k = 0 \\ (1-\alpha_{avg})\hat{x}^2_{RSSI}[k-1] + \alpha_{avg}|R[k]|^2 & k > 0 \end{cases} \quad (\text{mW})^2 \tag{46}$$

and the result applied to Equation (47).

$$\hat{\sigma}_{RSSI\ \text{dB}} = 5\log(\left|\hat{x}^2_{RSSI}[k] - (\hat{\mu}_{RSSI}[k])^2\right|) \quad \text{dBm} \tag{47}$$

8.3.9.3 CINR mean and standard deviation

When CINR measurements are mandated by the BS, an SS shall obtain a CINR measurement (implementation-specific). From a succession of these measurements, the SS shall derive and update estimates of the mean and the standard deviation of the CINR, and report them via REP-RSP messages.

Mean and standard deviation statistics for CINR shall be reported in units of dB. To prepare such reports, statistics shall be quantized in 1 dB increments, ranging from a minimum of –10 dB (encoded 0x00) to a maximum of 53 dB (encoded 0x3F). Values outside this range shall be assigned the closest extreme value within the scale.

The method used to estimate the CINR of a single message is left to individual implementation, but the relative and absolute accuracy of a CINR measurement derived from a single message shall be ± 1 dB and ± 2 dB, respectively. The specified accuracy shall apply to the range of CINR values starting from the SNR of the most robust rate to 3 dB above the SNR of the least robust rate. See Table 312. In addition, the range over which these single-packet measurements are measured should extend 3 dB on each side beyond the –10 dB to 53 dB limits for the final reported, averaged statistics.

One possible method to estimate the CINR of a single message is to compute the ratio of the sum of signal power and the sum of residual error for each data sample, using Equation (48).

$$\text{CINR}[k] = \frac{\sum_{n=0}^{N-1} |s[k,n]|^2}{\sum_{n=0}^{N-1} |r[k,n] - s[k,n]|^2} \tag{48}$$

where $r[k,n]$ received sample n within message k; $s[k,n]$ the corresponding detected or pilot sample (with channel state weighting) corresponding to received symbol n.

The mean CINR statistic (in dB) shall be derived from a multiplicity of single messages using Equation (49).

$$\hat{\mu}_{\text{CINR dB}}[k] = 10\log(\hat{\mu}_{CINR}[k]) \tag{49}$$

where

$$\hat{\mu}_{\text{CINR}}[k] = \begin{cases} \text{CINR}[0] & k = 0 \\ (1-\alpha_{\text{avg}})\hat{\mu}_{\text{CINR}}[k-1] + \alpha_{\text{avg}}\,\text{CINR}[k] & k > 0 \end{cases} \tag{50}$$

k is the time index for the message (with the initial message being indexed by k =0, the next message by k = 1, etc.)

CINR[k]is a linear measurement of CINR (derived by any mechanism that delivers the prescribed accuracy) for message k

α_{avg} is an averaging parameter specified by the BS

To solve for the standard deviation, the expectation-squared statistic shall be updated using Equation (51),

$$\hat{x}^2_{\text{CINR}}[k] = \begin{cases} |\,\text{CINR}[0]|^2 & k = 0 \\ (1-\alpha_{\text{avg}})\hat{x}^2_{\text{CINR}}[k-1] + \alpha_{\text{avg}}|\,\text{CINR}[k]|^2 & k > 0 \end{cases} \tag{51}$$

and the result applied to Equation (52).

$$\hat{\sigma}_{\text{CINR dB}} = 5\log(\left|\hat{x}^2_{\text{CINR}}[k] - (\hat{\mu}_{\text{CINR}}[k])^2\right|) \quad \text{dB} \tag{52}$$

8.3.10 Transmitter requirements

All requirements on the transmitter apply to the RF output connector of the equipment. For equipment with integral antenna only, a reference antenna with 0 dBi gain shall be assumed.

8.3.10.1 Tx power level control

For an SS not supporting subchannelization, the transmitter shall support a monotonic power level control of 30 dB minimum. For an SS supporting subchannelization, the transmitter shall support a monotonic power level control of 50 dB minimum. The minimum step size shall be no more than 1 dB. The relative accuracy of the power control mechanism is ± 1.5 dB for step sizes not exceeding 15 dB, ± 3 dB for step sizes from 15 dB to 30 dB, and ± 5 dB for step sizes greater than 30 dB. For a BS, the transmitter shall support a monotonic power level control of 10 dB minimum.

8.3.10.2 Transmitter spectral flatness

The average energy of the constellations in each of the n spectral lines shall deviate no more than indicated in Table 309. The absolute difference between adjacent subcarriers shall not exceed 0.4 dB.

The power transmitted at spectral line 0 shall not exceed –15 dB relative to total transmitted power.

This data shall be taken from the channel estimation step.

Table 309—OFDM Spectral flatness

Spectral lines	Spectral flatness
Spectral lines from –50 to –1 and +1 to +50	±2 dB from the measured energy averaged over all 200 active tones
Spectral lines from –100 to –50 and +50 to +100	+2/–4d B from the measured energy averaged over all 200 active tones

8.3.10.3 Transmitter constellation error and test method

To ensure that the receiver SNR does not degrade more than 0.5 dB due to the transmitter SNR, the relative constellation RMS error, averaged over subcarriers, OFDM frames, and packets, shall not exceed a burst profile dependent value according to Table 310.

Table 310—Allowed relative constellation error versus data rate

Burst type	Relative constellation error for SS (dB)	Relative constellation error for BS (dB)
BPSK-1/2	–13.0	–13.0
QPSK-1/2	–16.0	–16.0
QPSK-3/4	–18.5	–18.5
16-QAM-1/2	–21.5	–21.5
16-QAM-3/4	–25.0	–25.0
64-QAM-2/3	–29.0	–29.0
64-QAM-3/4	–30.0	–31.0

The sampled signal shall be processed in a manner similar to an actual receiver, according to the following steps, or an equivalent procedure (IEEE Std 802.11-2007, Clause 17 [B29]):

a) Start of frame shall be detected.
b) Transition from short sequences to channel estimation sequences shall be detected, and fine timing (with one sample resolution) shall be established.
c) Coarse and fine frequency offsets shall be estimated.
d) The packet shall be de-rotated according to estimated frequency offset.
e) The complex channel response coefficients shall be estimated for each of the subcarriers.
f) For each of the data OFDM symbols, transform the symbol into subcarrier received values, estimate the phase from the pilot subcarriers, de-rotate the subcarrier values according to estimated phase, and divide each subcarrier value with a complex estimated channel response coefficient. In the case of subchannelization transmission, the estimated channel coefficient of the nearest allocated subcarrier shall be used for those subcarriers not part of the allocated subchannels.
g) For each data-carrying subcarrier, find the closest constellation point and compute the Euclidean distance from it. In the case of subchannelization transmission, for data-carrying subcarriers not part of the allocated subchannels, the Euclidean distance shall be computed relative to 0+0j.

h) Compute the RMS average of all errors in a packet. It is given by Equation (53).

$$\text{Error}_{RMS} = \frac{1}{N_f}\sum_{i=1}^{N_f} \frac{\sum_{j=1}^{L_P}\left[\sum_{\substack{k=-N_{used}/2 \\ k\neq 0}}^{N_{used}/2}\left\{(I(i,j,k)-I_0(i,j,k))^2+(Q(i,j,k)-Q_0(i,j,k))^2\right\}\right]}{\sum_{j=1}^{L_P}\left[\sum_{\substack{k=-N_{used}/2 \\ k\neq 0}}^{N_{used}/2}\left\{I_0(i,j,k)^2+Q_0(i,j,k)^2\right\}\right]} \tag{53}$$

where

L_P	is the length of the packet
N_f	is the number of frames for the measurement
$(I_0(i,j,k), Q_0(i,j,k))$	denotes the ideal symbol point of the ith frame, j^{th} OFDM symbol of the frame, k^{th} subcarrier of the OFDM symbol in the complex plane
$(I(i,j,k), Q(i,j,k))$	denotes the observed point of the ith frame, j^{th} OFDM symbol of the frame, k^{th} subcarrier of the OFDM symbol in the complex plane

8.3.10.4 Transmitter channel bandwidth and RF carrier frequencies

For licensed bands, channel bandwidths allowed shall be limited to the regulatory provisioned bandwidth divided by any power of 2, rounded down to the nearest multiple of 250 kHz, resulting in a channel bandwidth no less than 1.25 MHz.

If the resulting channel bandwidth is an odd multiple of 250 kHz, then for any band for which support is claimed, the RF carrier shall only be tunable to every odd multiple of 125 kHz within that band. If the resulting channel bandwidth is an even multiple of 250 kHz, then for any band for which support is claimed, the RF carrier shall only be tunable to every even multiple of 125 kHz within that band. For FDD systems, support shall be claimed separately for UL and DL.

For example, if the regulatory provisioned bandwidth is 14 MHz between 3400 and 3414 MHz, then the allowed channelled bandwidths are those shown in Table 311.

Table 311—Example of channelization for licensed bands

Channelization (MHz)	Center frequencies (MHz)
14	3407
7	$3403.5 + n \cdot 0.25 \quad n \in \{0\ldots28\}$
3.5	$3401.75 + n \cdot 0.25 \quad n \in \{0\ldots42\}$
1.75	$3400.875 + n \cdot 0.25 \quad n \in \{0\ldots49\}$

8.3.11 Receiver requirements

All requirements on the receiver apply to the RF input connector of the equipment. For equipment with integral antenna only, a reference antenna with 0 dBi gain shall be assumed.

8.3.11.1 Receiver sensitivity

The BER measured after FEC shall be less than 10^{-6} at the power levels given by Equation (54) for standard message and test conditions. If the implemented bandwidth is not listed, then the values for the nearest smaller listed bandwidth shall apply. The minimum input levels are measured as follows:

— Using the defined standardized message packet formats
— Using an AWGN channel

The receiver minimum input level sensitivity (R_{SS}) shall be (assuming 5 dB implementation margin and an 8 dB noise figure) as shown in Equation (54).

$$R_{SS} = -101 + SNR_{Rx} + 10 \cdot \log\left(F_S \cdot \frac{N_{used}}{N_{FFT}} \cdot \frac{N_{subchannels}}{16}\right) \tag{54}$$

where

SNR_{Rx} is the receiver SNR (dB) per Table 312
F_S is the sampling frequency (MHz) as defined in 8.3.2.2
$N_{\text{subchannels}}$ is the number of allocated subchannels (default 16 if no subchannelization is used)

Table 312—Receiver SNR assumptions

Modulation	Coding rate	Receiver SNR (dB)
BPSK	1/2	3.0
QPSK	1/2	6.0
	3/4	8.5
16-QAM	1/2	11.5
	3/4	15.0
64-QAM	2/3	19.0
	3/4	21.0

Note that these SNR values are derived in an AWGN environment and assume that Reed-Solomon convolutional coding (RS-CC) is used.

Test messages for measuring Receiver Sensitivity shall be based on a continuous stream of MAC PDUs, each with a payload containing an ***R*** times repeated sequence $\boldsymbol{S_{modulation}}$. For each modulation, a different sequence applies:

$\boldsymbol{S_{BPSK}}$ = [0xE4,0xB1]
$\boldsymbol{S_{QPSK}}$ = [0xE4, 0xB1, 0xE1, 0xB4]
$\boldsymbol{S_{16\text{-}QAM}}$ = [0xA8, 0x20, 0xB9, 0x31, 0xEC, 0x64, 0xFD, 0x75] (55)
$\boldsymbol{S_{64\text{-}QAM}}$ = [0xB6, 0x93, 0x49, 0xB2, 0x83, 0x08, 0x96, 0x11, 0x41, 0x92, 0x01, 0x00,
0xBA, 0xA3, 0x8A, 0x9A, 0x21, 0x82, 0xD7, 0x15, 0x51, 0xD3, 0x05,
0x10, 0xDB, 0x25, 0x92, 0xF7, 0x97, 0x59, 0xF3, 0x87, 0x18, 0xBE,
0xB3, 0xCB, 0x9E, 0x31, 0xC3, 0xDF, 0x35, 0xD3, 0xFB, 0xA7,
0x9A, 0xFF, 0xB7, 0xDB]

For each mandatory test message, the ($\boldsymbol{R}$,$\boldsymbol{S_{modulation}}$) tuples that shall apply are as follows:

Short length test message payload (288 data bytes): (144,S_{BPSK}), (72,S_{QPSK}), (36,$S_{16\text{-}QAM}$), (6,$S_{64\text{-}QAM}$)
Mid-length test message payload (864 data bytes): (432,S_{BPSK}), (216,S_{QPSK}), (108,$S_{16\text{-}QAM}$), (18,$S_{64\text{-}QAM}$)
Long length test message payload (1488 data bytes): (744,S_{BPSK}), (372,S_{QPSK}), (186,$S_{16\text{-}QAM}$), (31,$S_{64\text{-}QAM}$)

The test condition requirements are: ambient room temperature, shielded room, conducted measurement at the RF port if available, radiated measurement in a calibrated test environment if the antenna is integrated, and RS FEC is enabled. The test shall be repeated for each test message length and for each ($\boldsymbol{R}$,$\boldsymbol{S_{modulation}}$) tuple as identified above, using the mandatory FEC scheme. The results shall meet or exceed the sensitivity requirements set out in Equation (54).

8.3.11.2 Receiver adjacent and alternate channel rejection

The receiver adjacent and alternate channel rejection shall be met over the required dynamic range of the receiver, from 3 dB above the reference sensitivity level specified in 8.3.11.1 to the maximum input signal level as specified in 8.3.11.3.

The adjacent channel rejection and alternate channel rejection shall be measured at minimum sensitivity by setting the desired signal's strength 3 dB above the rate dependent receiver sensitivity [see Equation (54)] and raising the power level of the interfering signal until the error rate specified in 8.3.11.1 is obtained. The adjacent channel rejection and alternate channel rejection shall also be measured at maximum input level by setting the interfering channel signal strength to the receiver maximum signal level as specified in 8.3.11.3 and decreasing the power level of the desired signal until the specified error rate is obtained. In both cases, the power difference between the desired signal and the interfering channel is the corresponding C/I ratio. The interfering signal shall be a conforming OFDM signal, unsynchronized with the signal in the channel under test. The requirement shall be met on both sides of the desired signal channel. For nonadjacent channel testing, the test method is identical except the interfering channel shall be any channel other than the adjacent channel or the co-channel. For the PHY to be compliant, the minimum rejection shall exceed the values shown in Table 313.

Table 313—Adjacent and nonadjacent channel rejection

Modulation/coding	Adjacent channel interference C/I (dB)	Nonadjacent channel rejection C/I (dB)
16-QAM-3/4	–10	–29
64-QAM-3/4	–4	–23

8.3.11.3 Receiver maximum input signal

The receiver shall be capable of decoding a maximum on-channel signal of –30 dBm.

8.3.11.4 Receiver maximum tolerable signal

The receiver shall tolerate a maximum signal of 0 dBm without damage.

8.3.11.5 Receiver image rejection

The receiver shall provide a minimum image rejection of 50 dB. The image rejection requirement shall be inclusive of all image terms originating at the receiver RF and subsequent intermediate frequencies.

8.3.12 Frequency and timing requirements

At the BS, the transmitted center frequency, receive center frequency and the symbol clock frequency shall be derived from the same reference oscillator. At the BS the reference frequency tolerance shall be better than $\pm 8\times10^{-6}$ in licensed bands up to 10 years from the date of equipment manufacture.

At the SS, both the transmitted center frequency and the sampling clock frequency shall be synchronized and locked to the BS with a tolerance of maximum 2% of the subcarrier spacing for the transmitted center frequency and 5 ppm for the sampling clock frequency. In the case of subchannelization, the tolerance for transmitted center frequency shall be maximum 1% of the subcarrier spacing.

During the synchronization period, the SS shall acquire frequency synchronization within the specified tolerance before attempting any UL transmission. During normal operation, the SS shall track the frequency changes and shall defer any transmission if synchronization is lost.

All SSs shall acquire and adjust their timing so that all UL OFDM symbols arrive time coincident at the BS to a accuracy of ±50% of the minimum guard-interval or better.

8.4 WirelessMAN-OFDMA PHY

8.4.1 Introduction

The WirelessMAN-OFDMA PHY (Sari and Karam [B40]), based on OFDM modulation, is designed for NLOS operation in the frequency bands below 11 GHz per 1.3.4. For licensed bands, channel bandwidths allowed shall be limited to the regulatory provisioned bandwidth divided by any power of 2 no less than 1.0 MHz.

The OFDMA PHY mode based on at least one of the FFT sizes 2048 (backward compatible to IEEE Std 802.16-2004), 1024, 512, and 128 shall be supported. This facilitates support of the various channel bandwidths.

The MS may implement a scanning and search mechanism to detect the DL signal when performing initial network entry, and this may include dynamic detection of the FFT size and the channel bandwidth employed by the BS.

8.4.2 OFDMA symbol description, symbol parameters and transmitted signal

8.4.2.1 Time domain description

Inverse-Fourier-transforming creates the OFDMA waveform; this time duration is referred to as the useful symbol time T_b. A copy of the last T_g of the useful symbol period, termed CP, is used to collect multipath, while maintaining the orthogonality of the tones. Figure 217 illustrates this structure.

The transmitter energy increases with the length of the guard time while the receiver energy remains the same (the cyclic extension is discarded), so there is a $10\log(1 - T_g/(T_b + T_g))/\log(10)$ dB loss in E_b/N_0. Using a cyclic extension, the samples required for performing the FFT at the receiver can be taken anywhere over the length of the extended symbol. This provides multipath immunity as well as a tolerance for symbol time synchronization errors.

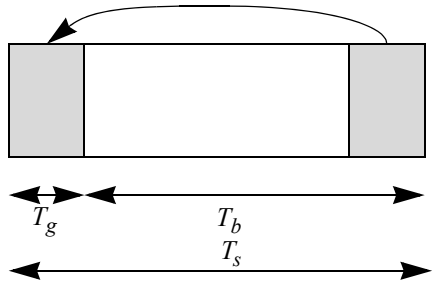

Figure 217—OFDMA symbol time structure

On initialization, an SS should search all possible values of CP until it finds the CP being used by the BS. The SS shall use the same CP on the UL. Once a specific CP duration has been selected by the BS for operation on the DL, it should not be changed. Changing the CP would force all the SSs to resynchronize to the BS.

8.4.2.2 Frequency domain description

The frequency domain description includes the basic structure of an OFDMA symbol.

An OFDMA symbol is made up of subcarriers, the number of which determines the FFT size used. There are several subcarrier types, as follows:

— Data subcarriers: for data transmission
— Pilot subcarriers: for various estimation purposes
— Null carrier: no transmission at all, for guard bands and DC carrier

The purpose of the guard bands is to enable the signal to naturally decay and create the FFT "brick wall" shaping.

In the OFDMA mode, the active subcarriers are divided into subsets of subcarriers, each subset is termed a subchannel. In the DL, a subchannel may be intended for different (groups of) receivers; in the UL, a transmitter may be assigned one or more subchannels, several transmitters may transmit simultaneously. The subcarriers forming one subchannel may, but need not be adjacent. The concept is shown in Figure 218.

The symbol is divided into logical subchannels to support scalability, multiple access, and advanced antenna array processing capabilities.

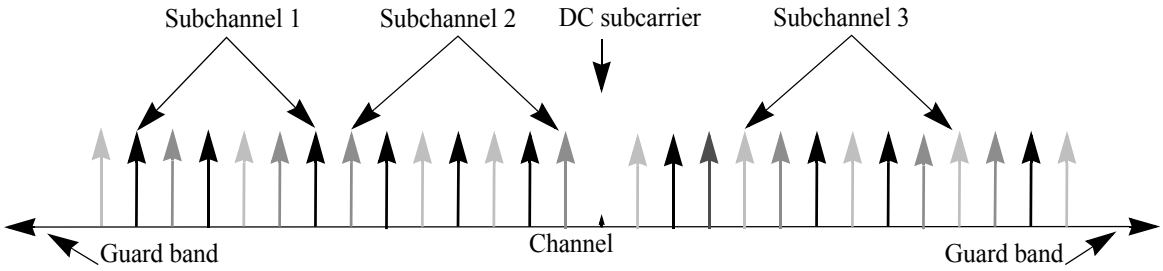

Figure 218—OFDMA frequency description (3 channel schematic example)

8.4.2.3 Primitive parameters

The following four primitive parameters characterize the OFDMA symbol:

— *BW:* The nominal channel bandwidth.
— N_{used}: Number of used subcarriers (which includes the DC subcarrier).
— n: Sampling factor. This parameter, in conjunction with BW and N_{used} determines the subcarrier spacing and the useful symbol time. This value is set as follows: for channel bandwidths that are a multiple of 1.75 MHz, then $n = 8/7$; else, for channel bandwidths that are a multiple of any of 1.25, 1.5, 2, or 2.75 MHz, then $n = 28/25$; else, for channel bandwidths not otherwise specified, then $n = 8/7$.
— G: This is the ratio of CP time to "useful" time. The following values shall be supported: 1/32, 1/16, 1/8, and 1/4.

8.4.2.4 Derived parameters

The following parameters are defined in terms of the primitive parameters of 8.4.2.3:

— N_{FFT}: Smallest power of two greater than N_{used}
— Sampling frequency: $F_s = \text{floor}(n \cdot BW/8000) \times 8000$
— Subcarrier spacing: $\Delta f = F_s / N_{FFT}$
— Useful symbol time: $T_b = 1/\Delta f$
— CP time: $T_g = G \cdot T_b$
— OFDMA symbol time: $T_s = T_b + T_g$
— Sampling time: T_b / N_{FFT}

8.4.2.5 Transmitted signal

Equation (56) specifies the transmitted signal voltage to the antenna, as a function of time, during any OFDMA symbol.

$$s(t) = \text{Re}\left\{ e^{j2\pi f_c t} \sum_{\substack{k = -(N_{used}-1)/2 \\ k \neq 0}}^{(N_{used}-1)/2} c_k \cdot e^{j2\pi k \Delta f (t - T_g)} \right\} \tag{56}$$

where

t is the time, elapsed since the beginning of the subject OFDMA symbol, with $0 < t < T_s$

c_k is a complex number; the data to be transmitted on the subcarrier whose frequency offset index is k, during the subject OFDMA symbol. It specifies a point in a QAM constellation.

T_g is the guard time

T_s is the OFDMA symbol duration, including guard time

Δf is the subcarrier frequency spacing

8.4.3 OFDMA basic terms definition

8.4.3.1 Slot and data region

A slot in the OFDMA PHY requires both a time and subchannel dimension for completeness (subchannels are defined in 8.4.6.) and is the minimum possible data allocation unit.

The definition of an OFDMA slot depends on the OFDMA symbol structure, which varies for UL and DL, for FUSC and PUSC, and for the distributed subcarrier permutations and the adjacent subcarrier permutation.

— For DL FUSC (defined in 8.4.6.1.2.2) and DL optional FUSC (defined in 8.4.6.1.2.3), one slot is one subchannel by one OFDMA symbol.
— For DL PUSC (defined in 8.4.6.1.2.1), one slot is one subchannel by two OFDMA symbols.
— For UL PUSC (defined in 8.4.6.2.1 and 8.4.6.2.5) and for DL TUSC1 and TUSC2 (defined in 8.4.6.1.2.4 and 8.4.6.1.2.5), one slot is one subchannel by three OFDMA symbols.
— For the adjacent subcarrier permutation (defined in 8.4.6.3), one slot is one subchannel by two, three, or six OFDMA symbols.

In OFDMA, a data region is a two-dimensional allocation of a group of contiguous subchannels, in a group of contiguous OFDMA symbols. All the allocations refer to logical subchannels. A two-dimensional allocation may be visualized as a rectangle, such as the 4 × 3 rectangle shown in Figure 219.

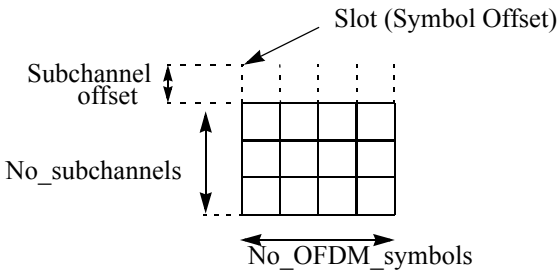

Figure 219—Example of a data region that defines an OFDMA allocation

8.4.3.2 Segment

A segment is a subdivision of the set of available OFDMA subchannels (that may include all available subchannels). One segment is used for deploying a single instance of the MAC.

8.4.3.3 Permutation zone

Permutation zone is a number of contiguous OFDMA symbols, in the DL or the UL, that use the same permutation formula. The DL subframe or the UL subframe may contain more than one permutation zone.

8.4.3.4 OFDMA data mapping

MAC data shall be processed as described in 8.4.9 and shall be mapped to an OFDMA data region (see 8.4.3.1) for DL and UL using the algorithms defined below.

DL:

a) Segment the data into blocks sized to fit into one OFDMA slot.

b) Each slot shall span one subchannels in the subchannel axis and one or more OFDMA symbols in the time axis, as per the slot definition in 8.4.3.1 (see Figure 220 for an example). Map the slots so that the lowest numbered slot occupies the lowest numbered subchannel in the lowest numbered OFDMA symbol.

c) Continue the mapping so that the OFDMA subchannel index is increased. When the edge of the data region is reached, continue the mapping from the lowest numbered OFDMA subchannel in the next available symbol.

UL:

The UL mapping consists of two steps. In the first step, the OFDMA slots allocated to each burst are selected. In the second step, the allocated slots are mapped.

Step 1—Allocate OFDMA slots to bursts.

1) Segment the data into blocks sized to fit into one OFDMA slot.
2) Each slot shall span one subchannel in the subchannel axis and one or more OFDMA symbols in the time axis, as per the slot definition in 8.4.3.1 (see Figure 221 for an example). Allocate the slots so that the lowest numbered slot occupies the lowest numbered OFDMA symbol in the lowest numbered subchannel.
3) Continue allocating such that the OFDMA symbol index is increased (skipping allocations made with UIUC=0, UIUC=11 (Extended-2 UIUC) with Type=8, 12, 13; see 8.4.5.4). When the edge of the UL zone (which is marked with Zone IE) is reached, continue allocating from the lowest numbered OFDMA symbol in the next available subchannel.
4) An UL allocation is created by selecting an integer number of contiguous slots, according to the ordering of items d) through f). This results in the general Burst structure shown by the gray area in Figure 221.

Step 2—Map OFDMA slots within the UL allocation.

5) Map the slots so that the lowest numbered slot occupies the lowest numbered subchannel in the lowest numbered OFDMA symbol.
6) Continue the mapping so that the subchannel index is increased. When the last subchannel is reached, continue the mapping from the lowest numbered subchannel in the next OFDMA symbol that belongs to the UL allocation. The resulting order is shown by the arrows in Figure 221.

The subchannels referred to in this subclause are logical subchannels, before subchannel renumbering in the DL, and before applying the rotation scheme (8.4.6.2.6) and the mapping indicated by UL allocated subchannels bitmap in UCD for the UL.

Figure 220 and Figure 221 illustrate the order in which OFDMA slots are mapped to subchannels and OFDMA symbols.

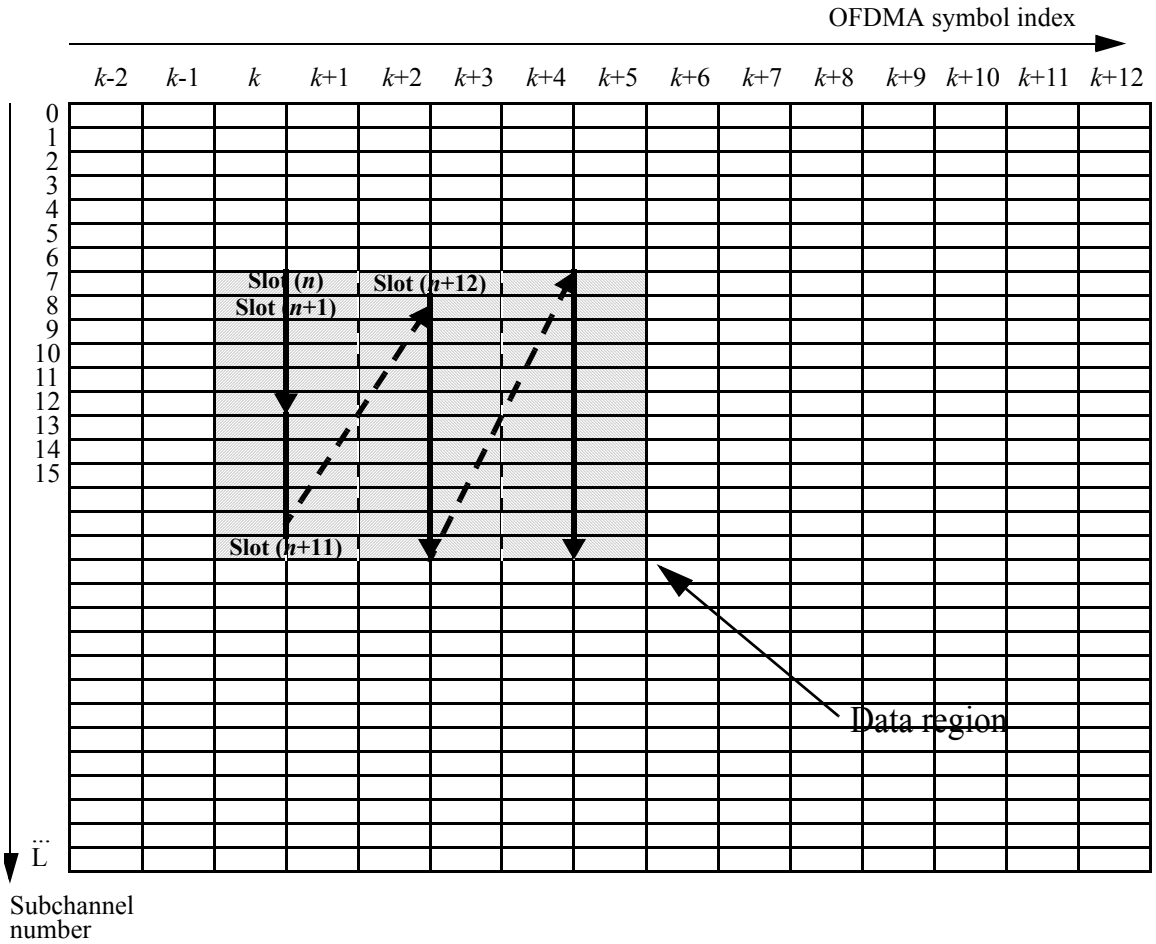

Figure 220—Example of mapping OFDMA slots to subchannels and symbols in the DL (in PUSC mode)

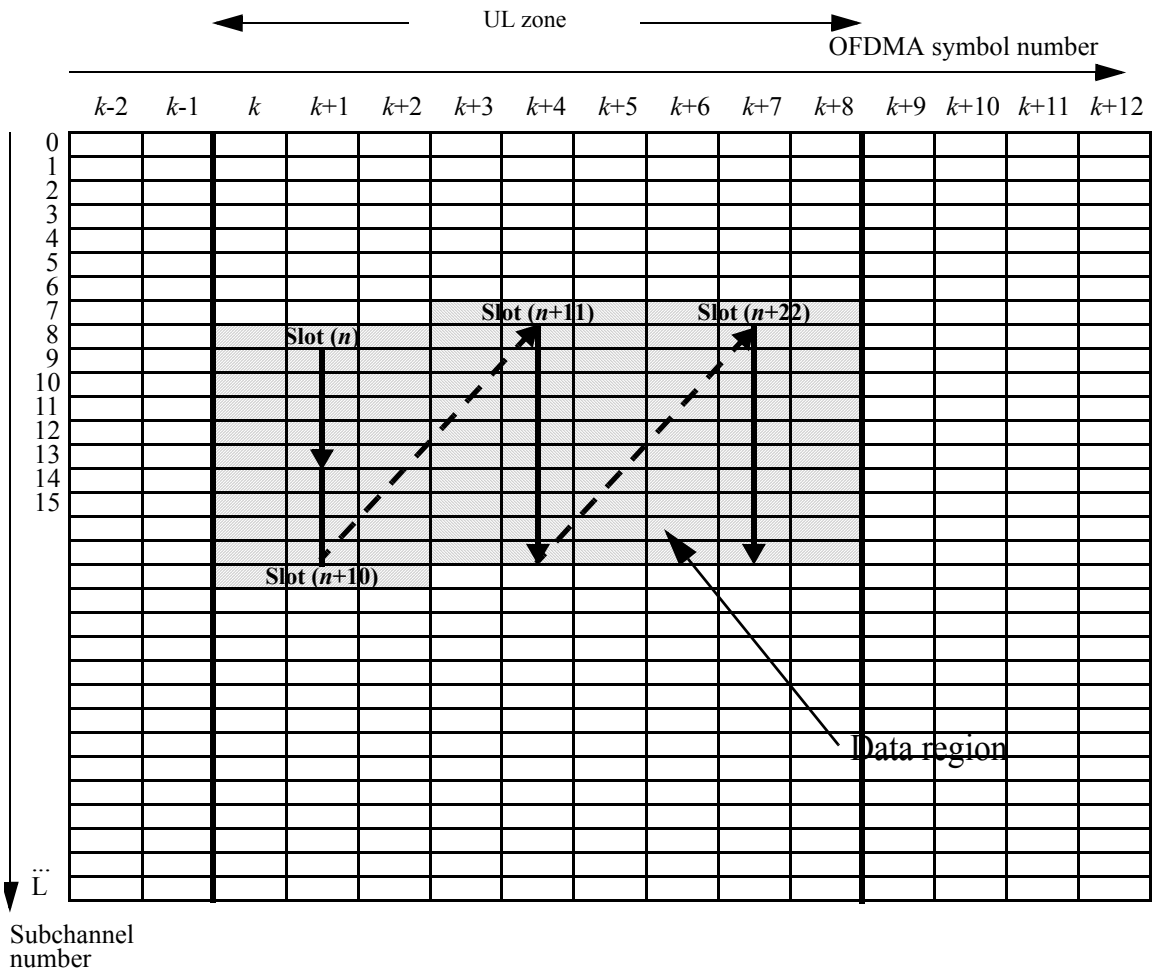

Figure 221—Example of mapping OFDMA slots to subchannels and symbols in the UL

8.4.4 Frame structure

In licensed bands, the duplexing method shall be either FDD or TDD. FDD SSs may be full-duplex (FDD) or half-duplex (H-FDD). The FDD BS shall support both SS types concurrently. In license-exempt bands, the duplexing method shall be TDD.

8.4.4.1 TDD frame structure

When implementing a TDD system, the frame structure is built from BS and SS transmissions. Each frame in the DL transmission begins with a preamble followed by a DL transmission period and an UL transmission period. In each frame, the TTG and RTG shall be inserted between the DL and UL and at the end of each frame, respectively, to allow the BS to turn around.

Figure 222 shows an example of an OFDMA frame (with only mandatory zone) in TDD mode.

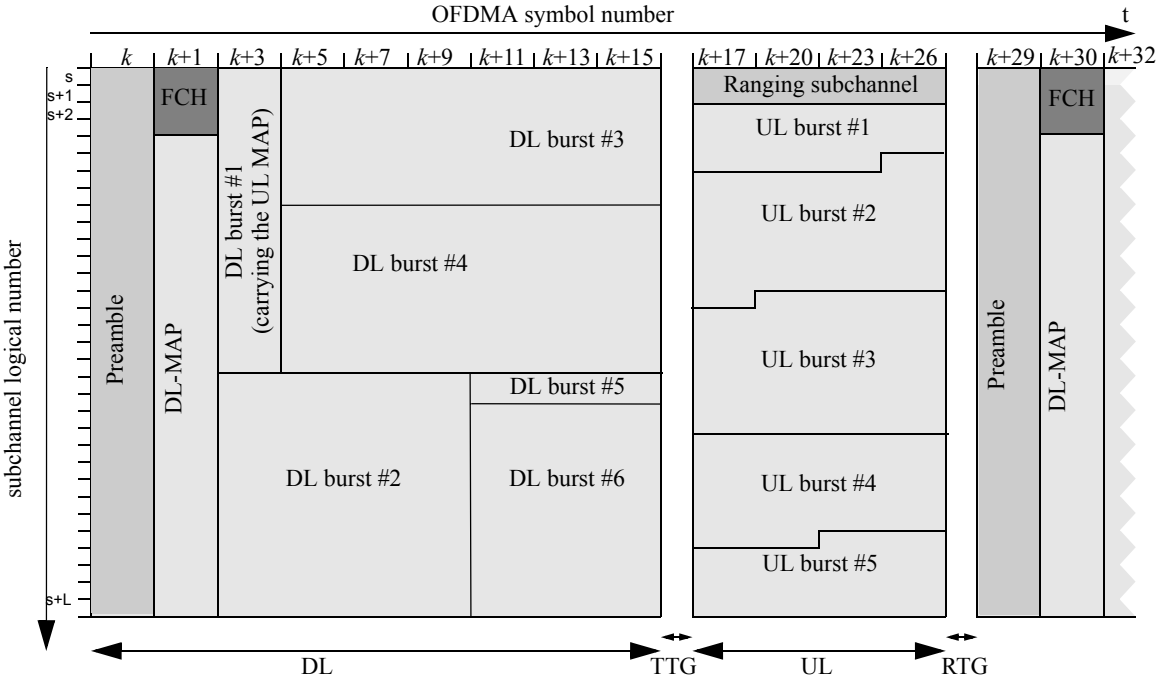

Figure 222—Example of OFDMA frame (with only mandatory zone) in TDD mode

8.4.4.2 FDD frame structure

Base stations of OFDMA FDD systems shall operate in full duplex mode. SSs shall be either full duplex (FDD) or half duplex (H-FDD). The FDD frame structure supports both FDD and H-FDD SS types. The frame structure supports a coordinated transmission arrangement of two groups of H-FDD SSs (Group-1 and Group-2) that share the frame at distinct partitions of the frame.

Figure 223 and Figure 224 show the frame structure of an OFDMA FDD system that supports the concurrent operation of H-FDD and FDD SSs. The DL frame contains two subframes. DL Subframe 1 comprises a preamble symbol, a MAP region (MAP1) and data symbols (DL1). DL Subframe 2 comprises a MAP region (MAP2) and data symbols (DL2).

The space between the two DL subframes is occupied by a gap DL_{Gap} (see Figure 223), the size of which shall be an integer number of symbols (0, 1, 2, 3). Optionally, as shown in Figure 224, this gap may also include the residual frame time, $DL_{residue}$ (the frame duration minus the total time occupied by the frame symbols). The number of symbols in DL_{Gap} and the location of $DL_{residue}$ shall be signaled in the DCD, in both DL subframes, using the "FDD DL gap" TLV (see 11.4.1 Table 575). The BS shall not change the location and value of $DL_{residue}$ during operation.

The UL frame contains two subframes, UL2 and UL1 (in this order). Figure 223 and Figure 224 show the timing relationship of the UL subframes relative to the DL subframes. The four parameters TTG1, TTG2, RTG1 and RTG2 are announced in the DCD messages (see Table 575) and they shall be sufficiently large to accommodate the H-FDD SSs transmit receive switching time plus the round trip propagation delay.

Group-1 H-FDD SSs listen to DL Subframe 1 and transmit in uplink subframe UL1. Group-2 H-FDD SSs listen to DL Subframe 2 and transmit in uplink subframe UL2. No uplink transmission by any H-FDD SS is allowed during the preamble transmission. All FDD SSs may transmit during the preamble transmission.

The MAP regions—MAP1 and MAP2—are independent and include FCH, DL-MAP and UL-MAP, the definitions of which are provided in 8.4.4.4, 8.4.5.3, and 8.4.5.4 respectively.

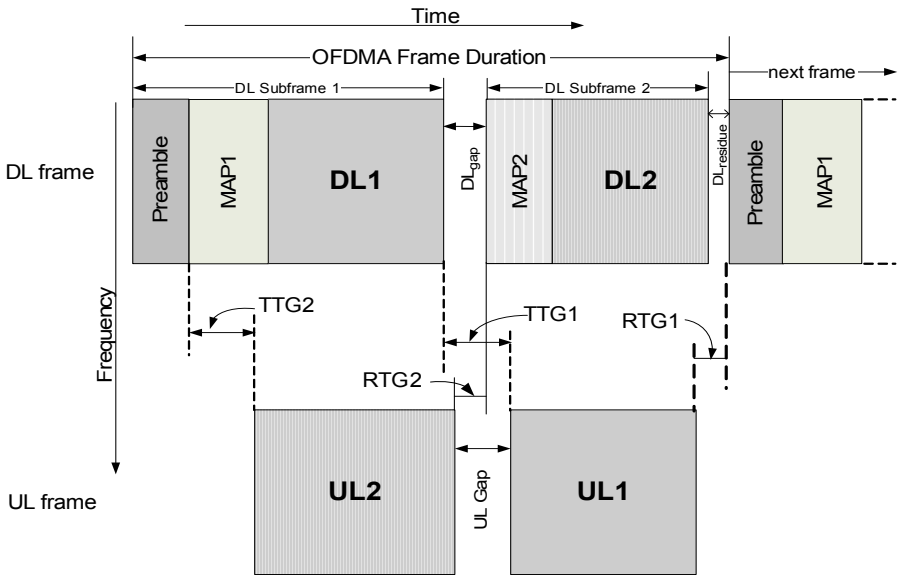

Figure 223—Generic OFDMA FDD frame structure supporting H-FDD MS in two groups with residual at the end of the frame

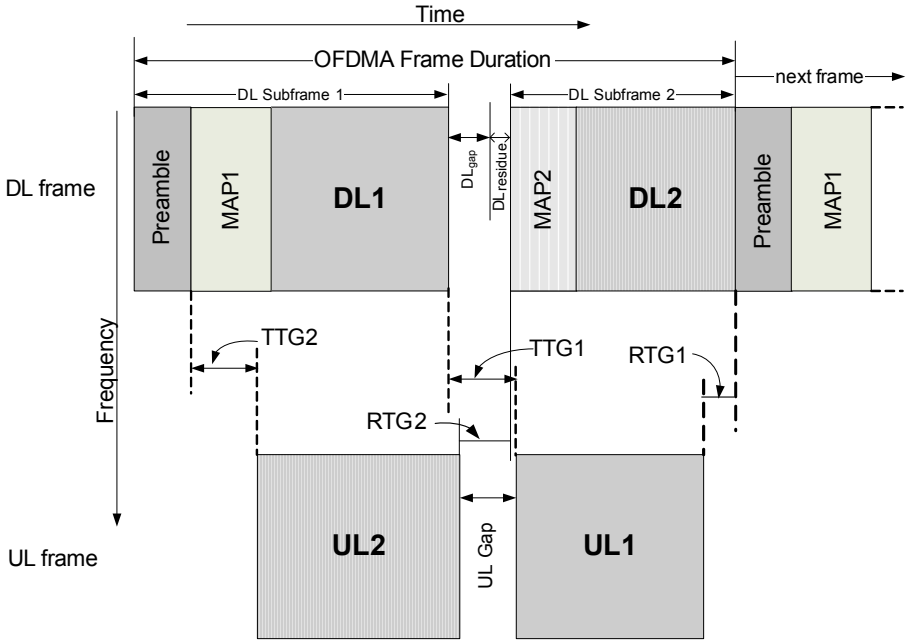

Figure 224—Generic OFDMA FDD frame structure supporting H-FDD MS in two groups with residual between the downlink subframes

Figure 225 and Figure 226 illustrate the time relevance of the MAPs in Group 1 and Group 2.

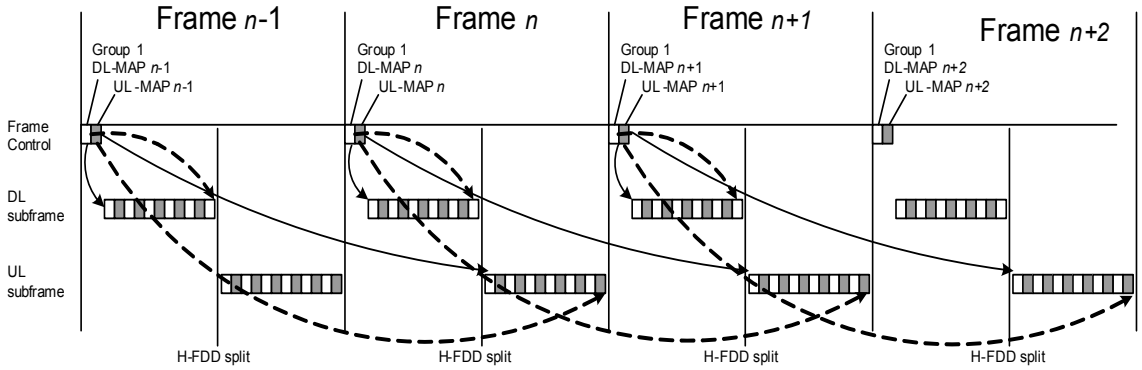

Figure 225—Time relevance of DL-MAP and UL-MAP for H-FDD group 1

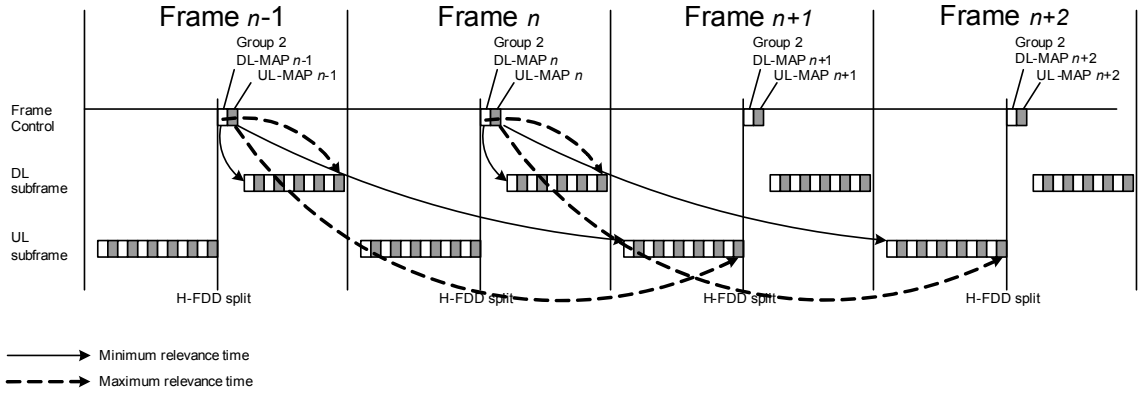

Figure 226—Time relevance of DL-MAP and UL-MAP for H-FDD group 2

8.4.4.2.1 Group Switching

In FDD, for H-FDD MSs, the BS shall be able to switch a user (MS) from group-1 to group-2, or vice versa at its discretion. To effectuate a group switch, the BS shall use any one of the following:

a) H-FDD Group Switch IE (8.4.5.3.28)
b) DL HARQ Chase Subburst IE
c) DL HARQ IR CTC Subburst IE
d) DL HARQ IR CC Subburst IE
e) Subburst IEs of the Persistent HARQ DL MAP IE
f) Subburst IEs of the Persistent HARQ UL MAP IE

When using the H-FDD Group Switch IE method, the BS shall use the Group Indicator field to signal the H-FDD group index that the MS should be associated with. If the Group Indicator field is not equal to the current H-FDD MS's group index, the mobile station shall switch to the group whose index is indicated by the Group Indicator field.

When an MS is instructed to switch to the opposite group, it shall deem any existing periodic CQICH allocations and any persistent allocation as being de-allocated by the BS.

The BS may request the MS to explicitly acknowledge a group switch instruction, in which case the BS shall assign a one-time MAP ACK channel. For items b), c), and d), the one-time CQICH channel shall be allocated via setting the LSB #0 of the Dedicated DL Control Indicator to 1 and using the Allocation Index field to indicate the location.

When the H-FDD Group Switch IE is used for signaling a group switch, a one-time CQICH channel may be assigned in that IE (see 8.4.5.3.28). In case the BS includes a one-time CQICH allocation in the IE that contains the group switch instruction, the MS shall acknowledge reception of the instruction—with a MAP ACK command, as described in 8.4.11.16—in the assigned CQICH channel.

If the group switch completion time TLV is included in the UCD message and the MS cannot join the new group within the group switch completion time as broadcasted in the TLV, the MS shall go to Group 1 and initiate an uplink communication with the BS. The BS shall interpret such communication as an indication from the MS that it failed to execute the group switch instruction.

After the MS receives a group switch instruction in frame *n*, the MS shall switch to the new group and decode the downlink subframe in frame *n*+H-FDD_Group_Switch_Delay+*m*, where *m* denotes the current group number (1 or 2) and H-FDD_Group_Switch_Delay is specified in the UCD (H-FDD Group Switch Delay). The MS may ignore the downlink subframe of the current group in frame *n*+H-FDD_Group_Switch_Delay+1 (the subframe immediately preceding the transition). See Figure 227. After switching groups, the MS should initiate an uplink communication with the BS to confirm the success of group switch operation.

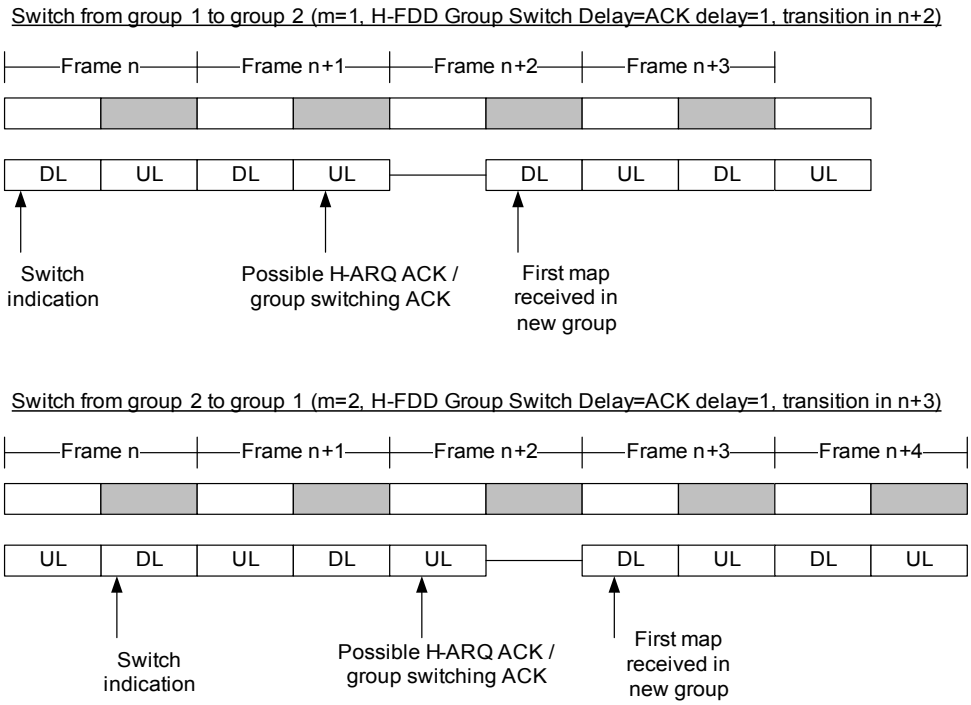

Figure 227—H-FDD Group transition scenarios

To avoid signaling overhead to re-define the PSC for H-FDD users after every group switch, the use of the "Sleep mode follows MAP relevance" capability (see 11.16.2) is recommended.

8.4.4.2.2 Frame partition signaling

In H-FDD operation, the BS shall indicate the number of symbols in DL Subframe 1 of the current frame (Figure 223) using the "No OFDMA Symbols" field in DL-MAP1 of the current frame (see 6.3.2.3.2). Additionally, the BS shall indicate the number of symbols in DL Subframe 2 of the next frame, using the "No OFDMA Symbols" field in DL-MAP2 of the current frame.

For the UL, the BS shall indicate, in the "No. OFDMA symbols" in UL-MAP1 and UL-MAP2, the size of UL1 of the next frame and the size of UL2 of the next-next (*n*+2) frame respectively. Thus, DL-MAP and UL-MAP in frame *n* provide partition information for frame *n*+1 and *n*+2.

If an H-FDD MS misses two or more consecutive MAP messages (due to MAP decoding errors, sleep mode, etc.), the H-FDD MS may no longer have valid frame partition information. When a H-FDD MS no longer has valid frame partition information, the MS shall listen to MAP1 in order to receive updated partition information.

The frame parameters broadcast by the BS shall allow the SS to locate DL Subframe 2 using any of the following formulas.

NOTE—PS index value 1 is the first PS of the Preamble symbol.

$$\begin{aligned}\text{Index of first PS of DL Subframe 2} &= (\text{Symbols\_Frame} - \text{Symbols\_DL2}) \times \text{PS\_1Symbol} + Z + 1\\ &= (\text{Symbols\_DL1} + \text{DL\_gap}) \times \text{PS\_1Symbol} + Z + 1\\ &= (1 + \text{Symbols\_UL2}) \times \text{PS\_1Symbol} + \text{TTG2} + \text{RTG2} + 1\end{aligned}$$

$$\begin{aligned}\text{Number of symbols in DL Subframe 2} &= \text{Symbols\_DL2}\\ &= \text{Symbols\_Frame} - \text{Symbols\_DL1} - \text{DL\_gap}\end{aligned}$$

where

DL_gap	is the number of symbols announced by TLV 24 of the DCD message corresponding to the DCD count announced in MAP1 of current frame
PS_1Symbol	is the number of PS per symbol
PS_Residual	is the number of PS per frame - Symbols_Frame × PS_1Symbol
RTG2	is in DCD message corresponding to the DCD count announced in the frame preceding the previous frame (assumption: RTG2 does not change from frame to frame)
Symbols_DL1	is the number of symbols broadcast in DL MAP1 in current frame (includes preamble)
Symbols_DL2	is the number of symbols broadcast in DL MAP2 in the previous frame
Symbols_Frame	= Floor(T_f / T_s)
Symbols_UL2	is the number of symbols broadcast in UL MAP2 in the frame preceding the previous frame
TTG2	is in DCD message corresponding to the DCD count announced in the frame preceding the previous frame (assumption: TTG2 does not change from frame to frame)
Z	= 0; if Bit 0 of TLV 24 == 1
	= PS_Residual; if Bit 0 of TLV 24 == 0

See 8.4.4.2.4 and 8.4.4.2.5 for more information on DCD and UCD content in FDD/H-FDD.

8.4.4.2.3 Full Duplex Support

Two alternative solutions may be used as defined in 8.4.4.2.3.1 and 8.4.4.2.3.2.

8.4.4.2.3.1 Full Duplex Support with FDD paired allocation IE

The BS may allocate resources in both H-FDD groups to full duplex mobile stations using the FDD paired allocation IE as described in 8.4.5.4.29.

8.4.4.2.3.2 Full Duplex Support with aggregated HARQ channels

Full duplex mobile stations may negotiate aggregated HARQ channels with the base station using the Aggregated HARQ Channels TLV. If the mobile station and base station negotiate aggregated HARQ channels, then these HARQ channels shall be treated as a paired set of HARQ channels for transmission and reception of bursts. The two HARQ channels in the paired set are denoted the first HARQ channel and the second HARQ channel ($ACID_1$ and $ACID_2$ in the Aggregated HARQ Channels TLV).

If the base station transmits an IE containing the first HARQ channel from an aggregated pair in the MAP of group 1 of frame *K*, then the BS shall transmit an IE containing the second HARQ channel from an aggregated pair in the MAP of group 2 of frame *K*. If the BS transmits an IE containing the first HARQ channel from an aggregated pair in the MAP of group 2 of frame *K*, then the BS shall transmit an IE

containing the second HARQ channel from an aggregated pair in the MAP of group 1 of frame *K*+1. The FDD MS monitors the MAP of group 1 and the MAP of group 2 to determine its allocation.

For DL operation, the BS shall separate a single burst into the resources corresponding to the first and second HARQ channels at the physical layer, and the MS shall aggregate the resources corresponding to the first and second HARQ channels at the physical layer as a single burst prior to decoding.

For UL operation, the MS shall separate a single burst into the resources corresponding to the first and second HARQ channels at the physical layer, and the BS shall aggregate the resources corresponding to the first and second HARQ channels at the physical layer as a single burst prior to decoding.

The total number of slots used for the burst shall be set to the number of slots assigned for the first HARQ channel plus the number of slots assigned for the second HARQ channel. The burst shall be mapped to the entire set of slots in the H-FDD group corresponding to the first HARQ channel before being mapped to the slots in the opposite H-FDD group corresponding to the second HARQ channel.

The base station shall set the modulation and coding indications (DIUC, Repetition Coding Indication, N_{EP}) and the HARQ channel indications (AI_SN, SPID) for the bursts corresponding to the aggregated HARQ channels to the same value.

8.4.4.2.4 DCD

For a particular configuration change count, the DCD message transmitted in H-FDD group 1 shall be equal to the DCD message transmitted in H-FDD group 2. In a given frame, the DCD count in the DL-MAPs of both groups shall be the same.

8.4.4.2.5 UCD

For a particular configuration change count, the UCD message transmitted in H-FDD group 1 shall be equal to the UCD message transmitted in H-FDD group 2. The UCD count in the UL-MAP of group 2 of frame *N* shall be equal to the UCD count in the UL-MAP of group 1 of frame *N*+1.

8.4.4.3 OFDMA Frame Parameters and Operations

SS allowances shall be made by a SSRTG and by a SSTTG. The BS shall not transmit DL information to a station later than (SSRTG + RTD) before the beginning of its first scheduled UL allocation in any UL subframe and shall not transmit DL information to it earlier than (SSTTG – RTD) after the end of the last scheduled UL allocation, where RTD denotes round-trip delay. In addition, the SS should be allowed to receive the DL preamble for each frame that contains DL data for it by assuring the period specified above does not overlap with the preamble. If the BS transmits the UL_initial_transmit_timing TLV in the UCD, the SSs transmit timing shall be referenced to the value indicated by this TLV. Otherwise, the SSs transmit timing shall be referenced to the 'UL Allocation Start Time' value specified by the UL-MAP. The parameters SSRTG and SSTTG are capabilities provided by the SS to BS upon request during network entry (see 11.8.3.1).

Subchannel allocation in the DL may be performed in the following ways: partial usage of subchannels (PUSC) where some of the subchannels are allocated to the transmitter and full usage of the subchannels (FUSC) where all subchannels are allocated to the transmitter. The FCH shall be transmitted using QPSK rate 1/2 with four repetitions using the mandatory coding scheme (i.e., the FCH information shall be sent on four subchannels with successive logical subchannel numbers) in a PUSC zone. The FCH contains the DL frame prefix as described in 8.4.4.4, and specifies the length of the DL-MAP message that immediately follows the DL frame prefix and the repetition coding used for the DL-MAP message.

The transitions between modulations and coding take place on slot boundaries in time domain (except in AAS zone) and on subchannels within an OFDMA symbol in frequency domain.

The OFDMA frame may include multiple zones (such as PUSC, FUSC, PUSC with all subchannels, optional FUSC, AMC, TUSC1, and TUSC2), the transition between zones is indicated in the DL-Map by the STC_DL_Zone IE (see 8.4.5.3.4) or AAS_DL_IE (see 8.4.5.3.3). No DL-MAP or UL-MAP allocations can span over multiple zones. Figure 228 depicts the OFDMA TDD frame with multiple zones.

The PHY parameters (such as channel state and interference levels) may change from one zone to the next. More than one DL or UL zone may be defined for each configuration (e.g., permutation, STC mode, PermBase, etc). For example, zones may be used for defining partitions in time for an FDD/H-FDD system.

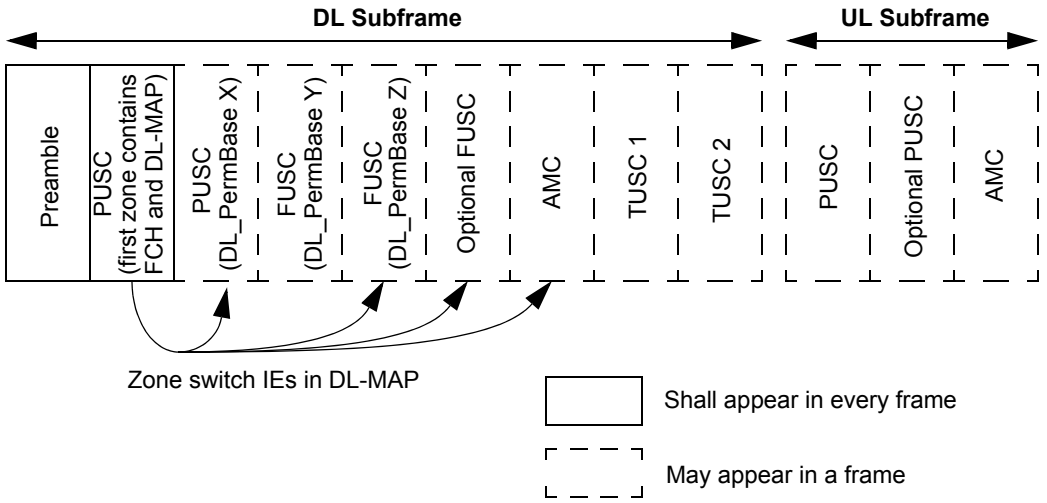

Figure 228—Illustration of OFDMA TDD frame with multiple zones

The following restrictions apply to DL allocations:

a) The maximum number of DL zones is 8 in one DL subframe.
b) For each SS, the maximum number of bursts to decode in one DL subframe is 64. This includes all bursts without CID or with CIDs matching the SS's CIDs.
c) For each MS, the maximum number of bursts transmitted concurrently and directed to the MS is limited by the value specified in Max_Num_Bursts TLV (including all bursts without CID or with CIDs matching the MSs CIDs). Bursts transmitted concurrently are bursts that share the same OFDMA symbol. Before the MS completes capability exchange, the BS shall transmit data to the MS in the first concurrent data burst per symbol.

If the BS allocates more bursts or zones, then the SS is required to decode the first bursts/zones until the limit is reached.

The precedence of UL and DL transmissions for H-FDD mode is defined as follows:

1) For FDD/H-FDD operation, overlapping allocations are defined as DL and UL allocations in which the time difference from the end of the DL allocation to the beginning of the UL allocation, measured at the MS antenna port, is less than SSRTG, or the time difference from the end

of the UL allocation to the beginning of the DL allocation, measured at the MS antenna port, is less than SSTTG. For UL control channels (UL ranging/BW-request, FAST-FEEDBACK, ACKCH region, sounding, etc.), the overlapping allocation applies to the region, i.e., a downlink allocation that overlaps a region is considered to overlap all slots and opportunities in the region.

2) In H-FDD, overlapping allocations of bursts explicitly directed to the MS (by basic CID in the DL/UL map) are not allowed.

The number of symbols in an STC zone (not including the midamble) shall divide by the number of symbols in any MIMO matrix used in the zone. In addition, the STC zone shall include at least one full period of the pilot pattern defined for the relevant permutation and the number of antennas.

8.4.4.4 DL frame prefix

The DL_Frame_Prefix is a data structure transmitted at the beginning of each frame and contains information regarding the current frame and is mapped to the FCH. Table 314 defines the structure of DL_Frame_Prefix except for the case of 128-FFT

Table 314—OFDMA DL Frame Prefix format for all FFT sizes except 128

Syntax	Size (bit)	Notes
DL_Frame_Prefix_Format() {	—	—
Used subchannel bitmap	6	Bit 0: Subchannel group 0 Bit 1: Subchannel group 1 Bit 2: Subchannel group 2 Bit 3: Subchannel group 3 Bit 4: Subchannel group 4 Bit 5: Subchannel group 5
Reserved	1	Shall be set to zero
Repetition_Coding_Indication	2	0b00: No repetition coding on DL-MAP 0b01: Repetition coding of 2 used on DL-MAP 0b10: Repetition coding of 4 used on DL-MAP 0b11: Repetition coding of 6 used on DL-MAP
Coding_Indication	3	0b000: CC encoding used on DL-MAP 0b001: BTC encoding used on DL-MAP 0b010: CTC encoding used on DL-MAP 0b011: ZT CC encoding used on DL-MAP 0b100: CC encoding with optional interleaver 0b101: LDPC encoding used on DL-MAP 0b110 to 0b111: *Reserved*
DL-Map_Length	8	—
Reserved	4	Shall be set to zero
}	—	—

Used subchannel bitmap

A bitmap indicating which groups of subchannel are used on the first PUSC zone and on PUSC zones in which ‘Use All SC’ field is set to ‘0’ in STC_DL_Zone_IE(). A value of 1 means *used by this segment*, and ‘0’ means *not used by this segment*.

Repetition_Coding_Indication
Indicates the repetition code used for the DL-MAP. Repetition code may be 0 (no additional repetition), 1 (one additional repetition), 2 (three additional repetitions) or 3 (five additional repetitions).

Coding_Indication
Indicates the FEC encoding code used for the DL-MAP. The DL-MAP shall be transmitted with QPSK modulation at FEC rate 1/2. The BS shall ensure that DL-MAP (and other MAC messages required for SS operation) are sent with the mandatory coding scheme often enough to ensure uninterrupted operation of SS supporting only the mandatory coding scheme.

DL-Map_Length
Defines the length in slots of the burst which contains only DL-MAP message or compressed DL-MAP message and compressed UL_MAP, if it is appended, that follows immediately the DL frame prefix after repetition code is applied.

The subchannel index of the six subchannel groups is shown in Table 315.

Before being mapped to the FCH, the 24-bit DL frame prefix shall be duplicated to form a 48-bit block, which is the minimal FEC block size.

Table 315—Subchannel index of the six subchannel groups

FFT size	Subchannel group	# Subchannel range	FFT size	Subchannel group	# Subchannel range
2048	0	0–11	512	0	0–4
	1	12–19		1	N/A
	2	20–31		2	5–9
	3	32–39		3	N/A
	4	40–51		4	10–14
	5	52–59		5	N/A
1024	0	0–5	128	0	0
	1	6–9		1	N/A
	2	10–15		2	1
	3	16–19		3	N/A
	4	20–25		4	2
	5	26–29		5	N/A

For the case of 128-FFT, the compressed format shown in Table 316 shall be used for FCH.

Table 316—OFDMA DL frame prefix format for 128-FFT

Syntax	Size (bit)	Notes
DL_Frame_Prefix_format() {	—	—
Used subchannel indicator	1	0: Subchannel 0 is used for segment 0, Subchannel 1 is used for segment 1, Subchannel 2 is used for segment 2, 1: Use all subchannels
Reserved	1	Shall be set to zero
Repetition_Coding_Indication	2	0b00: No repetition coding on DL-MAP 0b01: Repetition coding of 2 used on DL-MAP 0b10: Repetition coding of 4 used on DL-MAP 0b11: Repetition coding of 6 used on DL-MAP
Coding_Indication	3	0b000: CC encoding used on DL-MAP 0b001: BTC encoding used on DL-MAP 0b010: CTC encoding used on DL-MAP 0b011: ZT CC encoding used on DL-MAP 0b100: LDPC encoding used on DL-MAP 0b101 ~ 0b111: *Reserved*
DL-Map_Length	5	—
}	—	—

Before being mapped to the FCH, the 12-bit DL frame prefix shall be repeated four times to form a 48-bit block, which is the minimal FEC block size.

8.4.4.5 Allocation of subchannels for FCH and DL-MAP and logical subchannel numbering

In PUSC, any segment used shall be allocated at least the same number of subchannels as in subchannel group #0. For FFT sizes other than 128, the first 4 slots in the DL part of the segment contain the FCH as defined in 8.4.4.1. These slots contain 48 bits modulated by QPSK with coding rate 1/2 and repetition coding of 4. For 128-FFT, the first slot in the DL part of the segment is dedicated to FCH, and repetition is not applied. The basic allocated subchannel sets for segments 0, 1, and 2 are subchannel group #0, #2, and #4, respectively. Figure 229 depicts this structure.

After decoding the DL_Frame_Prefix message within the FCH, the SS has the knowledge of how many and which subchannels are allocated to the PUSC segment. In order to observe the allocation of the subchannels in the DL as a contiguous allocation block, the subchannels shall be renumbered. For the first PUSC zone, the renumbering shall start from the FCH subchannels (renumbered to values 0…11) and then continue numbering the subchannels in a cyclic manner to the last allocated subchannel and from the first allocated subchannel to the FCH subchannels. Figure 230 gives an example of such renumbering for segment 1. For other PUSC zones in which the Use All SC field is set to 1 or that are defined by AAS_DL_IE() renumbering shall be performed starting from subchannel $(N_{subchannels}/3)\times$PRBS_ID, where PRBS ID is specified in the STC DL Zone IE or AAS_DL_IE(). For other PUSC zones in which the Use All SC field is set to 0, the renumbering shall be the same as in the first PUSC zone. For downlink AMC permutation, the subchannel renumbering shall start from 0 and shall be done in increasing order of frequency index of the used physical bands, as described in ‘DL AMC allocated physical bands bitmap’ in the DCD.

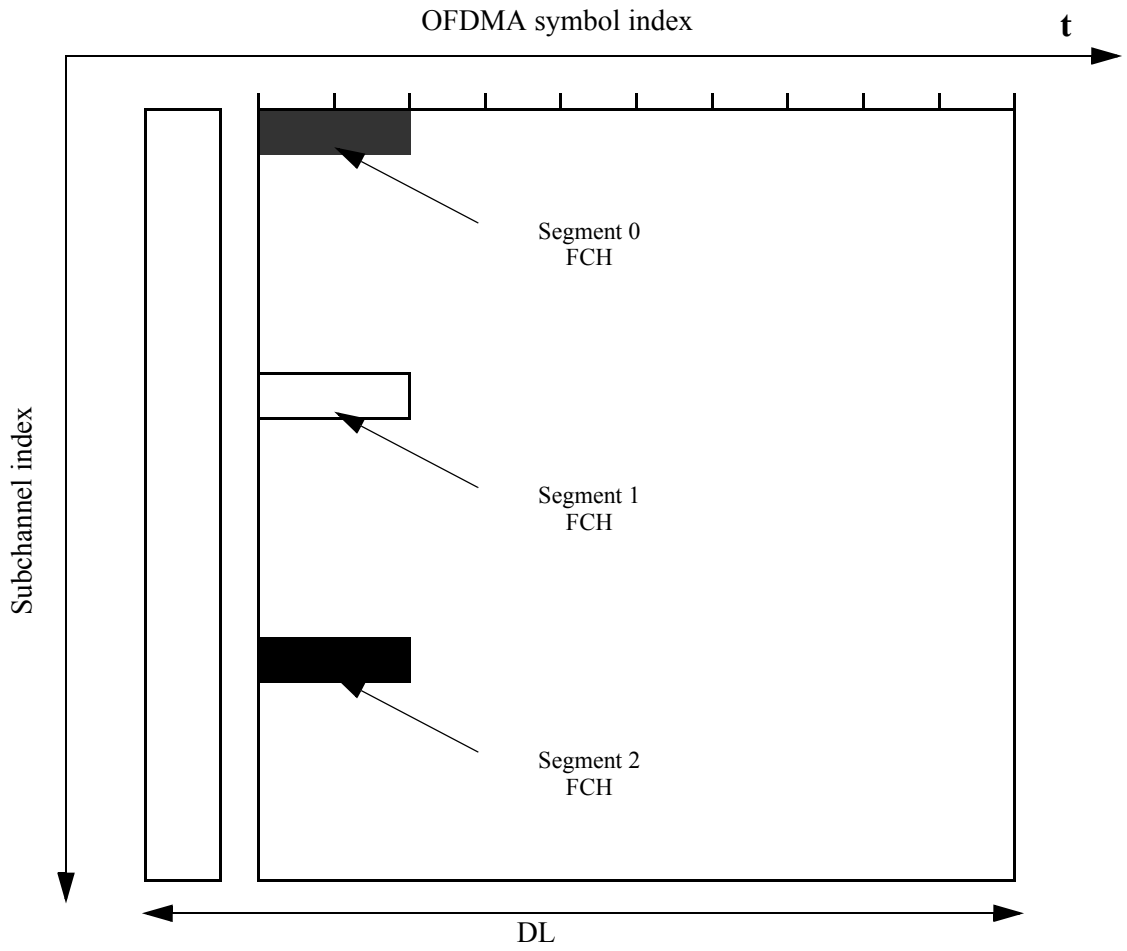

Figure 229—FCH subchannel allocation for all 3 segments

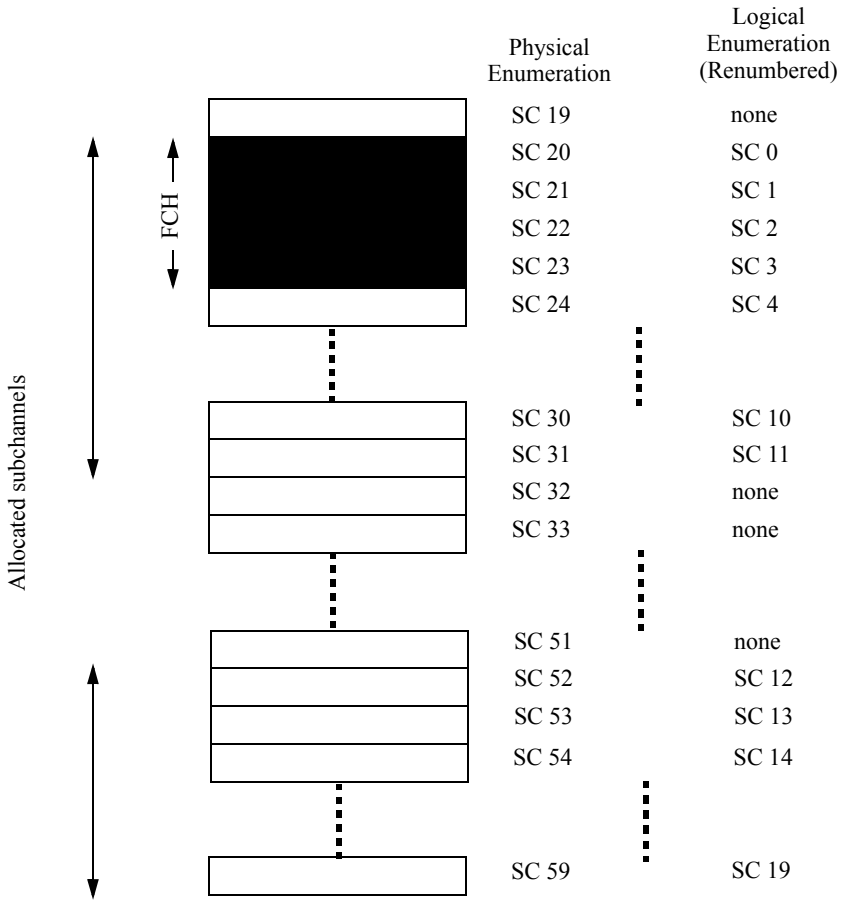

Figure 230—Example of DL renumbering the allocated subchannels for segment 1 in PUSC

For UL, in order to observe the allocation of the subchannels as a contiguous allocation block, the subchannels shall be renumbered. The renumbering shall start from the lowest numbered allocated subchannel (renumbered to value 0) and continue up to the highest numbered allocated subchannel, skipping nonallocated subchannels. Figure 231 gives an example of such renumbering for segment 1. For uplink AMC permutation, the subchannel renumbering shall start from 0 and shall be done in increasing order of frequency index of the used physical bands, as described in 'UL AMC allocated physical bands bitmap' in the UCD.

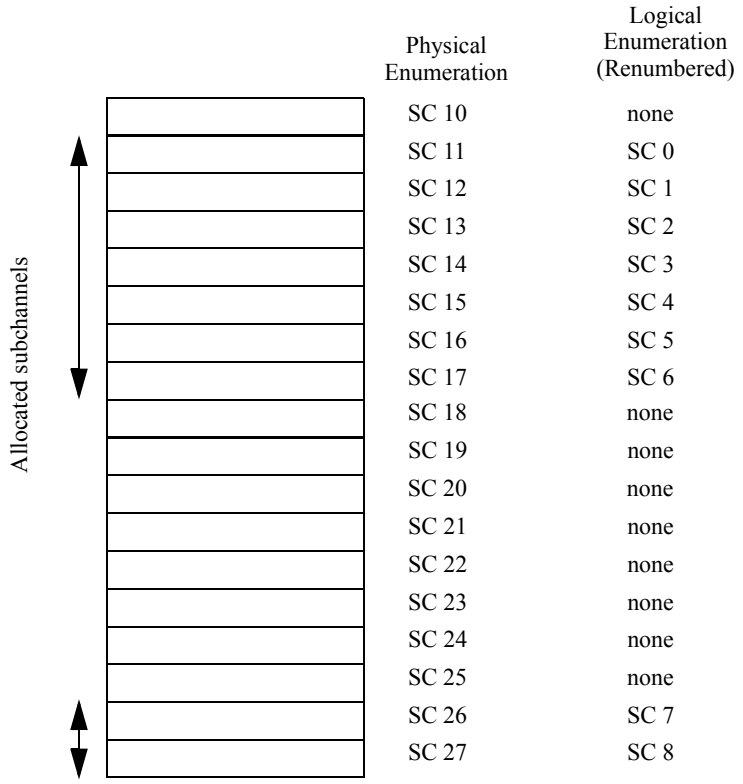

Figure 231—Example of UL renumbering the allocated subchannels for segment 1 in PUSC

The DL-MAP of each segment shall be mapped to the slots allocated to the segment in a frequency-first order, starting from the slot after the FCH (subchannel 4 in the first symbol, after renumbering) and continuing to the next symbols if necessary. The FCH of segments that have no subchannels allocated (unused segments) shall not be transmitted, and the respective slots may be used for transmission of MAP and/or data of other segments.

8.4.4.6 UL transmission allocations

The allocation for a user UL transmission is a number of subchannels over a number of OFDMA symbols. The basic allocation structure is a slot, as defined in 8.4.3.1.

The framing structure used for the UL includes an allocation for ranging and an allocation for data transmission. The MAC sets the length of the UL framing and the UL mapping.

In the UL, the BS shall not allocate to any SS more than one UL-MAP IE with data burst profile UIUC (1–10) in a single frame. In the UL, the BS shall not allocate to any MS more than one mini-subchannel allocation in a single frame. These limitations do not apply to HARQ data allocation regions.

For TDD mode, the BS shall not allocate more than three ranging allocation IEs (UIUC 12) per frame:

— One for initial ranging/HO ranging (Dedicated Ranging Indicator bit in UL-MAP IE is set to 0 and Ranging Method is set to 0b00 or 0b01)

— One for BR/periodic ranging (Dedicated Ranging Indicator bit in UL-MAP IE is set to 0 and Ranging Method is set to 0b10 or 0b11)
— One for initial ranging for the paged MS, location measurement and/or coordinated association (Dedicated Ranging Indicator bit in UL-MAP IE is set to 1)

For FDD/H-FDD mode, the BS may allocate up to 2 ranging regions of each type (up to 6 regions altogether).

Rectangular allocations made with UIUC = 0, 11 (Extended-2 UIUC) with Type = 8, 12, 13 shall not break the UL tile structure, shall not span over multiple zones, and shall conform to the following rules:

a) In each subchannel, the size of each continuous group of OFDMA symbols remaining after allocation of UIUC = 0, 11 (Extended-2 UIUC) with Type = 8, 12,13 regions shall be a multiple of three OFDMA symbols. For UIUC = 12, the sum of ranging allocations (in units of OFDMA symbols) shall be a multiple of 3 symbols.
b) The slot boundaries in all subchannels shall be aligned, i.e., if a slot starts in symbol k in any subchannel, then no slots are allowed to start at symbols $k + 1$, $k + 2$ at any other subchannel.
c) The number of UL symbols (excluding AAS preambles and Sounding zone (UIUC=13)) per zone shall be an integer multiple of slot duration. Data bursts, Fast Feedback and ACK channels shall always start on a slot boundary.

Figure 232 depicts examples of correct and incorrect allocations of regions with UIUC = 0, 11 (Extended-2 UIUC) with Type = 8, 12, 13. Each rectangle is an UL subframe (or zone). Regions 1, 2, and 3 are correct allocations, while regions 4 and 5 are incorrect allocations.

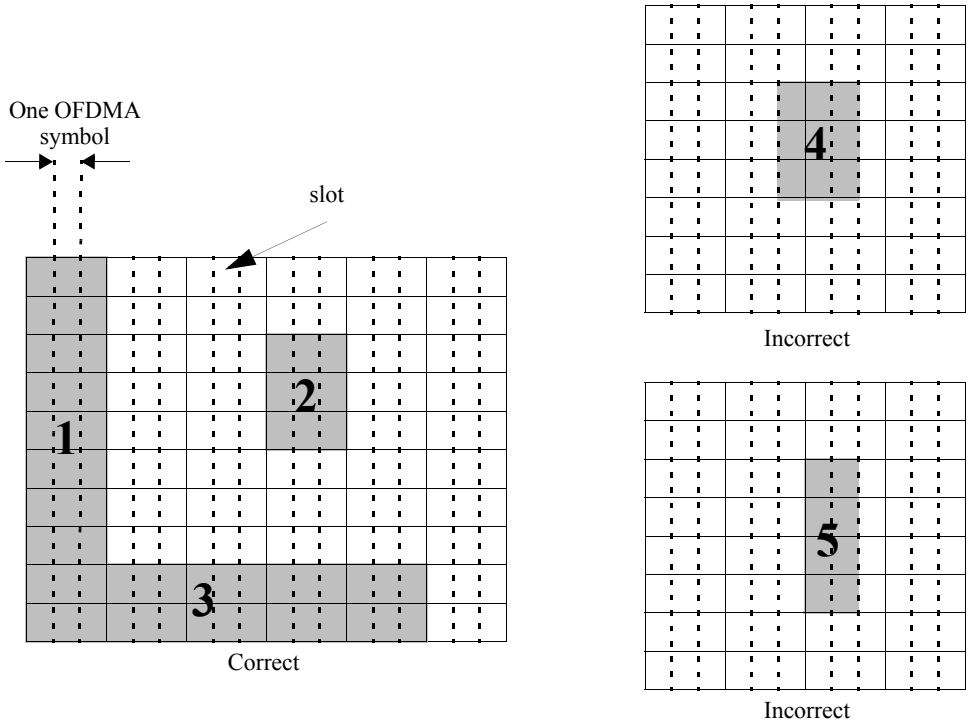

Figure 232—Example of rectangular allocation rules

8.4.4.7 Optional AAS support

AAS support is indicated by the AAS_DL_IE and AAS_UL_IE in the downlink and uplink broadcast maps. The AAS_IE specifies an AAS zone, which is defined as a contiguous block of OFDMA symbols that has a defined permutation and preamble structure. Multiple AAS zones can be supported within a frame. Each AAS zone may or may not contain an optional Diversity-Map Scan zone. AAS Operation without the optional Diversity-Map Scan zone is referred to as Basic AAS Mode.

8.4.4.7.1 AAS frame structure

An AAS DL zone begins on the specified symbol boundary and consists of all subchannels until the start of the next zone or end of frame. The two highest numbered subchannels of the DL frame may be dedicated at the discretion of the BS for the AAS diversity map zone in PUSC, FUSC, and optional FUSC permutation.

The AAS Diversity-MAP zone shall be used only with FFT sizes greater than or equal to 512.

In the AMC permutation, the first and last subchannels of the AAS DL zone may be dedicated at the discretion of the BS for the AAS Diversity-MAP Zone. When subchannels are used for a diversity map zone, they shall not be allocated in the normal DL-MAP message. These subchannels shall be used to transmit the AAS-DLFP() whose physical construction is shown in Figure 233. In the case that the AAS Diversity-MAP zone is not included in the AAS zone, these subchannels may be used for ordinary traffic and may be allocated in DL-MAP messages.

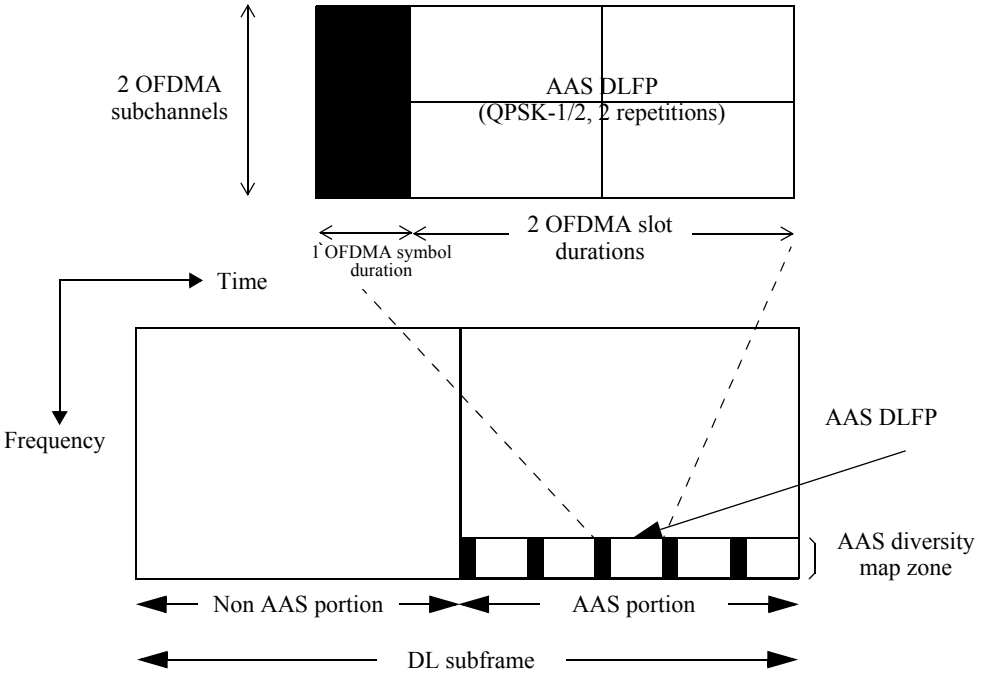

Figure 233—Example of allocation for AAS-DLFP

A 2-bin-by-3-symbol tile structure shall be used for all AMC permutations in an AAS zone, including the optional AAS Diversity-MAP zone.

In the AAS zone, the same antenna beam pattern shall be used for all pilot subcarriers and data subcarriers in a given AMC subchannel.

In an AAS zone defined with the PUSC permutation, the SS may assume that the entire major group is beamformed so that the channel may vary slowly within the major group over the entire duration of the zone.

The AAS portion in the DL (or UL) may be transmitted either by the FUSC/PUSC permutation or by the optional AMC permutation. Figure 234 shows an example of a DL subframe for each of these two possible variations.

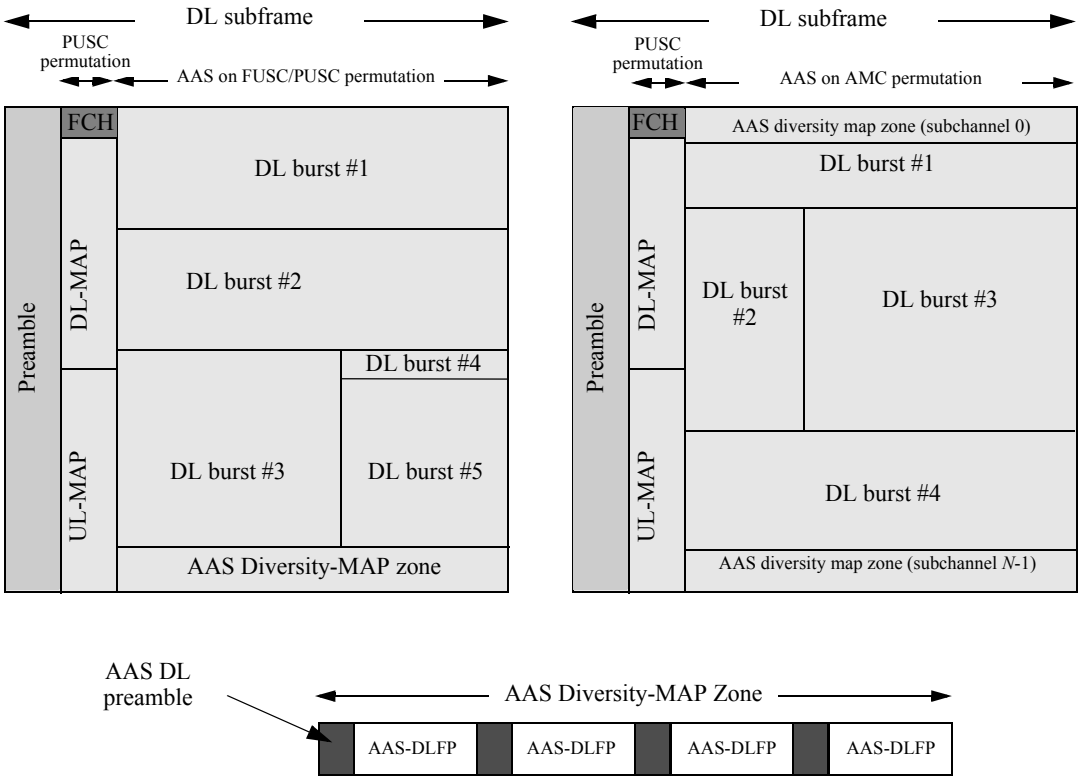

Figure 234—AAS Diversity-MAP frame structure

8.4.4.7.2 Optional Diversity-Map scan

The purpose of the AAS-DLFP is to provide a robust transmission of the required BS parameters to enable SS initial ranging, as well as SS paging and access allocation. This is achieved through using a highly robust form of modulation and coding (namely QPSK-1/2 rate with 2 repetitions). The start of an AAS-DLFP is marked by an AAS DL preamble. The AAS-DLFPs transmitted within the AAS Diversity-MAP Zone may, but need not, carry the same information. Different beams may be used within the AAS Diversity-MAP Zone; however, each AAS DL preamble and associated AAS-DLFP shall be transmitted on the same beam.

The UL and DL AAS zones are defined by the UL and DL extended AAS-IE in the broadcast map. In the case that an SS cannot successfully decode the broadcast maps, the SS shall scan for the DLFP messages and utilize private maps within the AAS zone. It is assumed that all AAS subscribers will be able to determine the IDcell used in the selection of the DL preamble at the beginning of the DL frame. This IDcell shall be

used as the DL_PermBase for the AAS zone. The UL_PermBase for the UL zone referred to by the initial ranging allocation in the AAS-DLFP shall be that provided in the UCD message. AAS subscribers that cannot detect the AAS DL IE transmitted in the DL-MAP, which specifies the boundaries and permutation of AAS DL zones, shall search over the possible permutations (PUSC/FUSC/AMC) and starting symbol to detect the AAS-DLFP. The permutation for the AAS UL zone is specified by a field in the AAS-DLFP.

The AAS-DLFP supports the ability to transmit a compressed DL-MAP IE. This allocation message can point to a broadcast DL-MAP that is beamformed or can be used to "page" a specific SS that cannot receive the normal DL-MAP. Once the initial allocations are provided to the user, private DL-MAPs and UL-MAPs can be sent on a beamformed transmission to the user at the highest modulation and highest coding rate that can be supported by the link. The AAS-DLFP also has an UL initial ranging allocation for AAS subscribers. The AAS-DLFP is not randomized.

The preamble length specified by the Downlink_Preamble_Config field should be limited to an integer number of slot durations for the DL PUSC permutation. Further, this field determines the preamble duration for the allocation pointed to by the DL Comp IE in the AAS-DLFP and shall be consistent with the preamble lengths described in the AAS DL IE messages.

The contents of the AAS-DLFP() payload is described by Table 317.

The structure for AAS Comp DL IE is described in Table 318.

8.4.4.7.3 AAS diversity scan map network entry procedure

The AAS network entry utilizing the DLFP involves the following procedure:

— The AAS-SS synchronizes frame timing and frequency to the frame-start DL preamble.
— For AAS-SS at cell edge, which cannot decode the FCH or broadcast DL-MAP and UL-MAP messages, they will search for the AAS-DLFP on the AAS Diversity-MAP Zone. This search will need to span the possible subchannel permutations.
— The AAS-SS may receive necessary messages such as the DCD and UCD pointed to by allocations made from the AAS-DLFP using the Broadcast CID. These messages may be transmitted using beam-pattern diversity to increase the link budget.
— Once the AAS-SS decodes the DCD and UCD it should perform initial ranging on the interval pointed to by the best-received AAS-DLFP.
— The AAS-SS may receive a ranging response message through a DL-MAP allocation pointed to by an AAS-DLFP with the Broadcast CID.
— The AAS-SS may receive initial DL allocations through a DL-MAP allocation pointed to by the AAS-DLFP with either Broadcast CID or specific CID.
— Subsequent allocations can be managed with private DL-MAP and UL-MAP allocations.

8.4.4.7.4 AAS preambles

AAS preambles are used to provide training information in both UL and DL AAS zones. All data allocations (UIUC 1-10, DIUC 0-12) and the optional AAS DLFP in an AAS zone are preceded by an AAS preamble.

UL and DL allocations are made exclusive of the AAS preamble. In the DL, a 2D allocation burst is preceded by the appropriate DL AAS preamble. In the UL, a 1D allocation is preceded by the appropriate AAS preamble. The absolute slot offset for the UL AAS allocation indicates the first data slot, which is preceded by the appropriate AAS preamble. If an UL allocation wraps at the end of the AAS zone, the data allocation does not include the symbols required for the initial AAS zone preambles.

In case the UL AAS zone length is equal to the number of symbols assigned to the AAS preamble, then no data slots are transmitted in the zone. In this case, the Slot Offset field in the UL-MAP IE shall be interpreted

Table 317—AAS-DLFP structure, diversity map scan

Syntax	Size (bit)	Notes
AAS-DLFP() {	—	—
AAS beam index	4	This index is the index referred to by the AAS_Beam_Select message (see 6.3.2.3.36). This field also defines the preamble frequency/time shift. For frequency-shifted preambles, this value is used for the value of K in Equation (60) (in 8.4.5.3.11). For time-shifted preambles, the value of K in Equation (59) (in 8.4.5.3.11) is given by For PUSC, K = [AAS_beam_index (mod14)]×N_{fft}/14 For AMC, K = [AAS_beam_index (mod 9)]×N_{fft}/9
Preamble select	1	0: Frequency-shifted preamble 1: Time-shifted preamble
Uplink_Preamble_Config	2	00: 0 symbols 01: 1 symbols 10: 2 symbols 11: 3 symbols
Downlink_Preamble_Config	2	00: 0 symbols 01: 1 symbols 10: 2 symbols 11: 3 symbols
AAS_UL_Zone_Permutation	2	This field describes the permutation used by the allocation pointed to by the AAS Ranging Allocation IE. 0b00: PUSC permutation 0b01: Optional PUSC permutation 0b10: Adjacent-subcarrier permutation 0b11: *Reserved*
AAS_Ranging_Allocation_IE(){	—	—
OFDMA Symbol Offset	8	The offset to the starting location of the ranging allocation is referenced to the DL preamble of the subsequent frame and consists of an integer symbol offset specified here, as well as the addition of the TTG known from DCD messages. If TTG is not present in the DCD (for FDD), it is assumed to be zero.
Subchannel offset	7	—
No of OFDMA Symbols	4	—
No of Subchannels	4	—
Ranging Method	2	00: Initial ranging over 2 symbols 01: Initial ranging over 4 symbols 10: BR/Periodic ranging over 1 symbol 11: BR/Periodic ranging over 3 symbols
}	—	—
AAS_Comp_DL_IE()	52	—
HCS	8	—
}	—	—

Table 318—AAS COMP DL IE format

Syntax	Size (bit)	Notes
AAS_COMP_DL_IE()	—	—
CID	16	—
DIUC	4	Set DIUC = 15 to indicate the well-known modulation of QPSK, encoded with the mandatory CC at rate 1/2
OFDMA Symbol Offset	8	Referenced to the DL frame start preamble of the next frame
Subchannel offset	8	—
No of OFDMA Symbols	7	—
No of Subchannels	6	—
Repetition Coding Indication	2	As specified in 8.4.5.3
Reserved	1	Shall be set to zero
}	—	—

as the logical subchannel from which to start transmitting preambles. The Duration field in the UL-MAP IE shall be interpreted as the number of subchannels on which to send the preamble.

The optional AAS-DLFP is preceded by an AAS DL preamble of one symbol duration. All other DL bursts with DIUC 0-12 within an AAS DL zone have a preamble whose duration is specified by the Downlink_Preamble_Config fields of the AAS DL IE. This field shall be consistent with the same field of the AAS-DLFP if present. In the case the AAS DL zone is using the PUSC permutation, the Downlink_Preamble_Config field shall always be set to an integer number of slot durations (i.e., 0 or 2 symbols).

An UL preamble is inserted at the start of an UL data allocation with UIUC 1–10 and whenever such an UL allocation wraps from the end of an AAS zone to the beginning. The first Uplink_Preamble_Config symbols of the UL AAS zone are reserved for UL AAS preambles. On a given subchannel, an UL AAS preamble will be inserted into these symbols by the SS devices who is allocated the slot following the preamble (or following a UIUC 0,12,13 region if it directly follows the preamble). Any UL preamble inserted in an AAS zone in a location other than the first Uplink_Preamble_Config symbols shall be 3 symbols in duration.

The absolute slot offset field in the UL-Map IE corresponds to the first data slot of an allocation, which is preceded by the appropriate number of symbols for the UL AAS preamble. The absolute slot offset will count from the first subchannel slot, counting all slots in an AAS zone including any UIUC 0,12,13 regions. The slot offset will not include the first Uplink_Preamble_Config preamble symbols at the start of the AAS zone.

The duration of an UL AAS zone minus the reserved UL preamble symbols and any UIUC 0,12,13 allocations shall be an integer number of slots. To insure that UL tile structures are not broken due to an allocation wrapping, the following restrictions hold:

— When used in an AAS zone, a UIUC 0,12,13 region shall be a multiple of three symbols in duration.
— An UL AAS zone shall consist of an integer number of slots plus the number of UL AAS preamble symbols as defined in by the Uplink_Preamble_Config field of the UL AAS IE and AAS-DLFP.

— UL AAS zone duration = N×3 + Uplink_Preamble_Config symbols.
— Fast-feedback channels shall be allocated an integer number of slots.

Figure 235 shows a legal UL AAS zone with an UIUC 12,13 allocation that is an integer number of slots in duration.

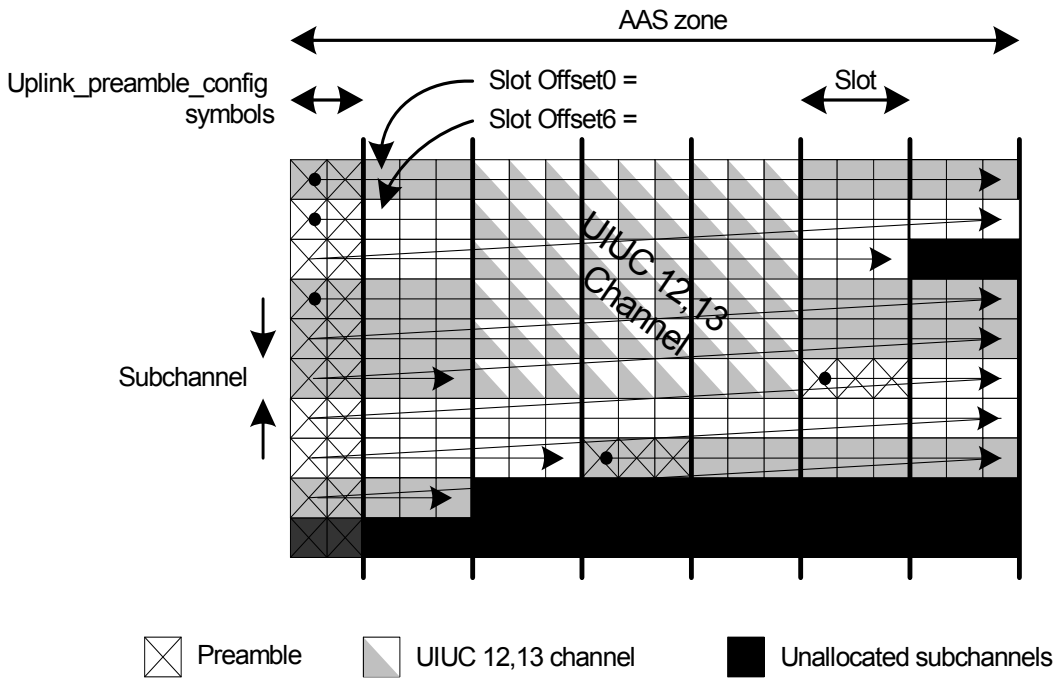

Figure 235—Example of UL AAS allocation with integer number of slots in duration

The structure of the preambles is as specified in 8.4.4.7.4.1 and 8.4.4.7.4.2 for the DL and UL, respectively. The preamble may be either time or frequency shifted according to a preamble shift index as defined in 8.4.5.3.11 and 8.4.5.4.12. The preamble shift index shall be set by the PHY MOD DL IE and PHY MOD UL IE, for DL and UL, respectively. The preamble shift index shall also be set by the AAS beam index carried by the AAS-DLFP(), in which case it shall apply to all subsequent DL allocations until a PHY MOD DL IE is received. The BS shall ensure that all shift index specifications for an allocation (e.g., in private maps, AAS-DLFP, broadcast maps) are consistent. When using the cyclic time-shifted or frequency-shifted preamble defined in 8.4.5.3.11 and 8.4.5.4.12, beams that use the same subchannels at the same time instance shall be configured to use a different preamble shift index.

8.4.4.7.4.1 AAS DL preamble

A basic AAS DL preamble is formed by concatenating the sequences from the three carrier sets defined in 8.4.6.1.1. Let the PN sequence for the m-th preamble carrier set (m = 0,1,2) defined in 8.4.6.1.1 have length N bits. The k-th bit of the basic AAS preamble sequence P is given by Equation (57).

$$P_k = W_n(m \bmod 3) \tag{57}$$

where

m	is $\left\lfloor \frac{k}{N} \right\rfloor \bmod 3$
n	is $k \bmod N$
$W_n(m)$	is the n-th bit of the PN sequence for the m-th preamble carrier-set defined in 8.4.6.1.1

The preamble sequence shall correspond to a IDcell equal to (ID_c + 16) mod 32 (where ID_c is the IDcell determined from the DL preamble). The bits P_k shall be mapped to values consistent with the specification in 8.4.6.1.1 (0 mapped to +1, 1 mapped to –1).

The AAS preamble sequence length is N_{used} bits and it shall be mapped starting from the first usable subcarrier, according to the permutation. The DC carrier shall not be modulated and the corresponding bit in the constructed preamble sequence shall be discarded.

The AAS preamble used for the burst shall be a subset of this basic preamble sequence corresponding to the subcarriers used by the burst's subchannels. In the AMC allocation, the basic AAS preamble occupies nine subcarriers in each bin of the subchannels. The number of symbols occupied by the preamble is set by the Downlink_Preamble_Config field in the AAS_DL_IE(). The AAS preamble is formed by copying the basic preamble onto the consecutive preamble symbols. The AAS preamble shall be placed, for each subchannel, starting from the first OFDMA symbol for that subchannel that belongs to the burst.

DL pilot locations are shifted forward with the burst allocation in time in the AMC zone with the following rules: pilot index = $9k + 3m + 1$ where k is a bin index and m = symbol index mod 3. The symbol index starts at zero for each AAS zone and corresponds to the first symbol in the AAS zone (if AAS preamble is not present) or the first symbol following the AAS preamble (if AAS preamble is present).

8.4.4.7.4.2 AAS UL preamble

The basic AAS UL preamble is formed by the method defined in 8.4.4.7.4.1 using the IDcell (as determined from the preamble). This subset shall correspond to the subcarriers used by the burst's subchannels. In the AMC allocation, the basic AAS preamble occupies nine subcarriers in each bin of the subchannels. The number of symbols occupied by the preamble is set by the Uplink_Preamble_Config field in the AAS_UL_IE(). The AAS preamble is formed by copying the basic preamble onto the consecutive preamble symbols. The AAS preamble shall be placed, for each subchannel, starting from the first OFDMA symbol for that subchannel that belongs to the burst.

Any UL allocation that wraps from the last OFDMA symbol of the AAS zone to the first OFDMA symbol shall have a preamble inserted in the first N OFDMA symbols of the AAS zone, where N is the number of AAS preamble symbols for the burst defined by the Uplink_Preamble_Config field of either the AAS UL IE or the AAS-DLFP.

The Tx power level of UL AAS preamble is equal to that of data subcarrier determined by Equation (131) or Equation (132), as appropriate, in 8.4.10.3, when the required (C/N) value of the current transmission, excluding code repetition factor, is between the predefined lower bound and the predetermined upper bound. Otherwise, the Tx power level of UL AAS preamble is boosted or reduced. The predefined $\text{LowerBound}_{\text{AAS\_PREAMBLE}}$ and $\text{UpperBound}_{\text{AAS\_PREAMBLE}}$ are broadcast in the UCD TLV. Thus, Tx power level of AAS preamble can be determined as shown in Equation (58).

$$\begin{cases} P_{\text{AAS\_PREAMBLE}} = P_{\text{Data}} - (C/N) + 10 \cdot \log_{10}(R) + \text{LowerBound}_{\text{AAS\_PREAMBLE}}, \\ \qquad \text{if } (C/N) - 10 \cdot \log 10(R) < \text{LowerBound}_{\text{AAS\_PREAMBLE}} \\ P_{\text{AAS\_PREAMBLE}} = P_{\text{Data}} - (C/N) + 10 \cdot \log_{10}(R) + Upper\text{Bound}_{\text{AAS\_PREAMBLE}}, \\ \qquad \text{if } (C/N) - 10 \cdot \log_{10}(R) \geq Upper\text{Bound}_{\text{AAS\_PREAMBLE}} \\ \qquad P_{\text{AAS\_PREAMBLE}} = P_{\text{Data}}, \\ \qquad \text{elsewhere} \end{cases} \tag{58}$$

where

P_{Data} is Tx power level (dBm) per subcarrier for current data transmission determined by Equation (135) in 8.4.10.3

(C/N) is required normalized C/N of the modulation/FEC rate for the current transmission in Table 514

R is the number of repetitions for the modulation/FEC rate

When SS does not have enough power to boost up AAS preamble, the power of AAS preamble is set equal to data symbol power. The power control of the UL AAS preamble is normally disabled by setting the initial values of $\text{LowerBound}_{\text{AAS\_PREAMBLE}}$ and $\text{UpperBound}_{\text{AAS\_PREAMBLE}}$ equal to –32 dB, 31.75 dB, respectively. The SS that does not support preamble power control set the AAS preamble power equal to that of data symbols.

8.4.5 Map message fields and IEs

8.4.5.1 DL-MAP PHY Synchronization field

The format of the PHY Synchronization field of the DL-MAP message, as described in 6.3.2.3.2 or Compressed_DL-MAP, as defined in 8.4.5.6, is given in Table 319. The frame duration codes are given in Table 320. The frame number is incremented by one each frame and eventually wraps around to zero.

Table 319—OFDMA PHY Synchronization Field

Syntax	Size (bit)	Notes
PHY_synchronization_field() {	—	—
Frame Duration Code	8	—
Frame Number	24	—
}	—	—

A BS shall generate DL-MAP messages in the format shown in Table 40, including all of the following parameters:

Frame number
The frame number is incremented by 1 MOD 2^{24} each frame.

Frame Duration Code
The frame duration code values are specified in Table 320.

8.4.5.2 Frame duration codes

Table 320 defines the various frame durations that are allowed. The frame durations defined in the table indicate the periodicity of the DL frame start preamble in both FDD and TDD cases.

Table 320—OFDMA frame duration (T_f ms) codes

Code (N)	Frame duration (ms)	Frames per second
0	*Reserved*	N/A
1	2	500
2	2.5	400
3	4	250
4	5	200
5	8	125
6	10	100
7	12.5	80
8	20	50
9–255	*Reserved*	

Note that the frame durations indicated in Table 320 typically are not integer multiples of one OFDMA symbol duration. Therefore some time padding may be necessary between the last useful OFDMA symbol of a frame and the beginning of the next frame. In addition, in the TDD case, note that the RTG and TTG guard intervals shall be included in a frame. Both RTG and TTG shall be no less than 5 µs in duration.

8.4.5.3 DL-MAP IE format

The OFDMA DL-MAP IE defines a two-dimensional allocation pattern as defined in Table 321.

Table 321—OFDMA DL-MAP IE format

Syntax	Size (bit)	Notes
DL-MAP_IE() {	—	—
DIUC	4	—
if (DIUC == 14) {	—	—
Extended-2 DIUC dependent IE	—	—
} Else if (DIUC == 15) {	—	—
Extended DIUC dependent IE	*variable*	See 8.4.5.3.2 and 8.4.5.3.2.1
} else {	—	—

Table 321—OFDMA DL-MAP IE format *(continued)*

Syntax	Size (bit)	Notes
if (INC_CID == 1) {	—	The DL-MAP starts with INC_CID = 0. INC_CID is toggled between 0 and 1 by the CID-SWITCH_IE() (8.4.5.3.7)
N_CID	8	Number of CIDs assigned for this IE
for (*n* = 0; *n* < N_CID; *n*++) {	—	—
If (included in SUB-DL-UL-MAP) {	—	—
RCID_IE()	—	For SUB-DL-UL-MAP, reduced CID format is used
} else {	—	—
CID	16	—
}	—	—
}	—	—
}		
OFDMA Symbol offset	8	—
if (Permutation = 0b11 and (AMC type is 2x3 or 1x6)) {	—	—
Subchannel offset	8	—
Boosting	3	000: Normal (not boosted); 001: +6dB; 010: –6dB; 011: +9dB; 100: +3dB; 101: –3dB; 110: –9dB; 111: –12dB;
No. OFDMA triple symbol	5	Number of OFDMA symbols is given in multiples of 3 symbols
No. Subchannels	6	—
} else {	—	—
Subchannel offset	6	—
Boosting	3	000: Normal (not boosted); 001: +6dB; 010: –6dB; 011: +9dB; 100: +3dB; 101: -3dB; 110: –9dB; 111: –12dB;
No. OFDMA Symbols	7	—
No. Subchannels	6	—
}	—	—
Repetition Coding Indication	2	0b00: No repetition coding 0b01: Repetition coding of 2 used 0b10: Repetition coding of 4 used 0b11: Repetition coding of 6 used
}	—	—
}	—	—

DIUC
DIUC used for the burst.

CID
The connection identifier that represents the assignment of the IE to a broadcast, multicast, or unicast address.

OFDMA Symbol offset
The offset of the OFDMA symbol in which the burst starts, measured in OFDMA symbols from the DL symbol in which the preamble is transmitted with the symbol immediately following the preamble being offset 1. The symbol offset shall follow the normal slot allocation within a zone so that the difference between OFDMA symbol offsets for all bursts within a zone is a multiple of the slot length in symbols.

Subchannel offset
The lowest index OFDMA subchannel used for carrying the burst, starting from subchannel 0.

Boosting
Power boost applied to the allocation's data subcarriers. The field shall be zero in an AAS zone with AMC permutation or in a zone with AMC or PUSC-ASCA permutation using dedicated pilots.

No. OFDMA Symbols
The number of OFDMA symbols that are used (fully or partially) to carry the DL PHY burst. The value of the field shall be a multiple of the slot length in symbols.

No. of subchannels
The number of subchannels with subsequent indexes, used to carry the burst.

Repetition Coding Indication
Indicates the repetition code used inside the allocated burst. Repetition shall be used only for DIUC indicating QPSK modulation.

The subchannels offsets referred to in all formats of DL-MAP IE are logical subchannels, before subchannel renumbering in the DL.

8.4.5.3.1 DIUC allocation

Table 322 defines the DIUC encoding that shall be used in the DL-MAP IEs.

Table 322—OFDMA DIUC values

DIUC	Usage
0–12	Different burst profiles
13	Gap/PAPR reduction
14	Extended-2 DIUC IE
15	Extended DIUC

DIUC = 0 shall have burst profile parameters that are the same as those used for transmission of the DL-MAP message.

DIUC = 13 may be used for allocation of Subchannels for PAPR reduction schemes. DIUC = 13 may also be used by the BS to create coverage enhancing safety zones. This is intended to provide reduced interference zones within the coverage area of the BS. The reduced interference zones are useful when the BS interfere with other BS. In such situations, the reduced interference zones may be used by the interfered BS to transmit data to SS that are registered with it, which would otherwise suffer from interference.

The SS shall ignore the received signal in the GAP/PAPR reduction region.

8.4.5.3.2 DL-MAP Extended IE format

A DL-MAP IE entry with a DIUC = 15 indicates that the IE carries special information and conforms to the structure shown in Table 323. A station shall ignore an extended IE entry with an extended DIUC value for which the station has no knowledge. In the case of a known extended DIUC value but with a length field longer than expected, the station shall process information up to the known length and ignore the remainder of the IE.

Table 323—DL-MAP Extended IE format

Syntax	Size (bit)	Notes
DL_Extended_IE() {	—	—
Extended DIUC	4	0x0..0xF
Length	4	Length in bytes of Unspecified Data field
Unspecified data	*variable*	—
}	—	—

8.4.5.3.2.1 DL-MAP Extended IE encoding format

Table 324 defines the encoding for extended DIUC that shall be used by DL-MAP Extended IEs.

Table 324—Extended DIUC code assignment for DIUC = 15

Extended DIUC (hexadecimal)	Usage
0x0	Channel Measurement IE
0x1	STC Zone IE
0x2	AAS DL IE
0x3	Data Location in Another BS IE
0x4	CID Switch IE
0x5	*Reserved*
0x6	*Reserved*
0x7	HARQ Map Pointer IE
0x8	PHYMOD DL IE
0x9	*Reserved*
0xA	Broadcast Control Pointer IE
0xB	DL PUSC Burst Allocation in Other Segment IE
0xC	PUSC ASCA ALLOC IE
0xD	H-FDD Group Switch IE
0xE	Extended Broadcast Control Pointer IE
0xF	UL Interference and Noise Level IE

8.4.5.3.2.2 DL-MAP Extended-2 IE encoding format

A DL-MAP IE entry with a DIUC = 14 indicates that the IE carries special information and conforms to the structure shown in Table 325. A station shall ignore an extended-2 IE entry with an extended-2 DIUC value for which the station has no knowledge. In the case of a known extended-2 DIUC value but with a length field longer than expected, the station shall process information up to the known length and ignore the remainder of the IE.

Table 325—OFDMA DL-MAP Extended-2 IE format

Syntax	Size (bit)	Notes
DL_Extended-2_IE() {	—	—
Extended-2 DIUC	4	0x0 … 0xF
Length	8	Length in bytes of Unspecified Data field
Unspecified data	*variable*	—
}	—	—

The Unspecified Data field shall be padded with bits set to zero to get an integer number of bytes, specified by Length, in the data field of the IE.

Table 326 defines the encoding for extended-2 DIUC that shall be used by DL-MAP Extended-2 IEs.

Table 326—Extended-2 DIUC code assignment for DIUC = 14

Extended-2 DIUC (hexadecimal)	Usage
0x0	MBS MAP IE
0x1	HO Anchor Active DL MAP IE
0x2	HO Active Anchor DL MAP IE
0x3	HO CID Translation MAP IE
0x4	MIMO in Another BS IE
0x5	Macro-MIMO DL Basic IE
0x6	Skip IE
0x7	HARQ DL MAP IE
0x8	HARQ ACK IE
0x9	Enhanced DL MAP IE
0xA	Closed-loop MIMO DL Enhanced IE
0xB	MIMO DL Basic IE
0xC	MIMO DL Enhanced IE

Table 326—Extended-2 DIUC code assignment for DIUC = 14 *(continued)*

Extended-2 DIUC (hexadecimal)	Usage
0xD	Persistent HARQ DL MAP IE
0xE	AAS SDMA DL IE
0xF	Extended-3 DIUC

8.4.5.3.2.3 DL-MAP Extended-3 IE encoding format

A DL-MAP IE entry with an Extended-2 DIUC = 0xF indicates that the IE carries special information and conforms to the structure shown in Table 327. A station shall ignore an extended-3 IE entry with an extended-3 DIUC value for which the station has no knowledge. In the case of a known extended-3 DIUC value but with a length field longer than expected, the station shall process information up to the known length and ignore the remainder of the IE.

Table 327—DL-MAP Extended-3 IE format

Syntax	Size (bit)	Notes
DL_Extended-3_IE() {	—	—
Extended-2 DIUC	4	0xF
Length	8	Length in bytes of the unspecified data field plus the extended-3 DIUC field
Extended-3 DIUC	4	0x0 … 0xF
Unspecified data	*variable*	—
}	—	—

Table 328 defines the encoding for extended-3 DIUC that shall be used by DL-MAP Extended-3 IEs.

Table 328—Extended-3 DIUC code assignment for Extended-2 DIUC = 15

Extended-3 DIUC (hexadecimal)	Usage
0x0	Power Boosting IE
0x1–0xF	*Reserved*

8.4.5.3.3 AAS DL IE format

Within a frame, the switch from non-AAS to AAS-enabled traffic is marked by using the extended DIUC = 15 with the AAS_DL_IE() (see Table 329). The AAS DL IE defines a DL AAS zone that spans continuous OFDMA symbols until terminated by a Zone Switch IE, another AAS DL IE, or the end of the DL frame.

Multiple AAS zones can exist within the same frame. For the HARQ MAP, the last AAS IE is relevant until the beginning of the broadcast region if defined in the HARQ Format Configuration IE. When used, the CID in the DL-MAP_IE() shall be set to the Broadcast CID. All DL bursts in the AAS portion of the frame may be preceded by an AAS preamble based on the Downlink_Preamble_Config field in the AAS_DL_IE(). The preamble is defined in 8.4.4.7.4.1.

Table 329—OFDMA AAS DL IE

Syntax	Size (bit)	Notes
AAS_DL_IE() {	—	—
Extended DIUC	4	AAS = 0x2
Length	4	Length = 0x3
OFDMA symbol offset	8	Denotes the start of the zone (counting from the frame preamble and starting from 0)
Permutation	3	0b00: PUSC permutation 0b01: FUSC permutation 0b10: Optional FUSC permutation 0b11: AMC 0b100: TUSC1 0b101: TUSC2 0b110–0b111: *Reserved*
DL_PermBase	6	—
Downlink_preamble_config	2	0b00: 0 symbols 0b01: 1 symbol 0b10: 2 symbols 0b11: 3 symbols
Preamble type	1	0: Frequency shifted preamble is used in this DL AAS zone 1: Time shifted preamble is used in this DL AAS zone
PRBS_ID	2	Values: 0...2. Refer to 8.4.9.4.1
Diversity Map	1	0: Not supported in this AAS zone 1: Supported in this AAS zone
Reserved	1	Shall be set to zero
}	—	—

Permutation
Defines the permutation used within the DL AAS zone.

DL_PermBase
Permutation base for specified DL AAS zone.

OFDMA Symbol offset
The offset of the OFDMA symbol in which the AAS zone starts, measured in OFDMA symbols from beginning of the current DL frame.

Downlink_preamble_config
Defines the number of DL AAS preambles to be used before each DL burst in the AAS zone.

Following an AAS IE indicating AMC permutation, the AMC type shall be 2x3 (2 bins by 3 symbols).

Figure 236 shows the burst allocations in the DL AAS zone.

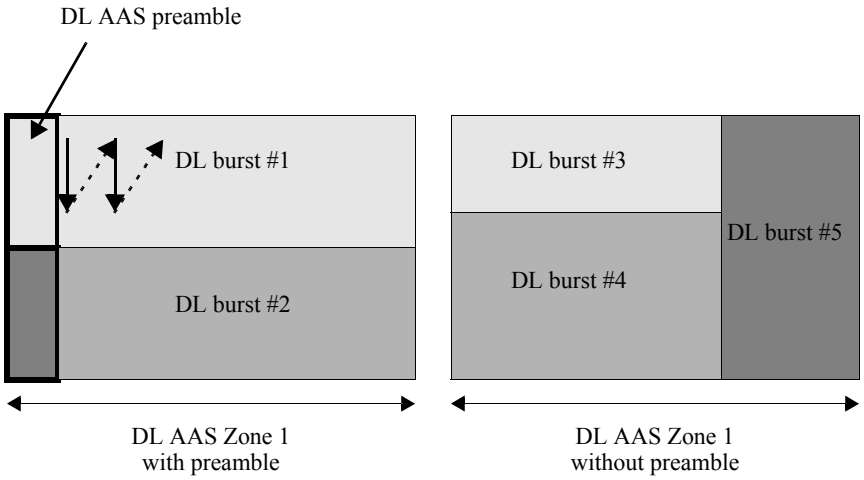

Figure 236—Burst allocations in DL AAS zone

8.4.5.3.4 STC DL Zone IE format

In the DL-MAP, a BS may transmit DIUC = 15 with the STC_DL_Zone_IE() to indicate that the subsequent allocations shall use a specific permutation and/or use a specific Tx diversity mode. The DL frame shall start in PUSC mode with no Tx diversity. Allocations subsequent to this IE shall use the permutation and Tx diversity mode it instructs, until the next STC DL Zone IE, AAS DL IE or MBS_MAP_IE with MBS permutation zone defined = 1. Allocation for a STC-capable SS shall be done through either DL_MAP_IE() or any one of the MIMO-related IEs (MIMO_DL_Basic_IE(), MIMO_DL_Enhanced_IE(), MIMO_DL_Chase_HARQ_subburst_IE, MIMO_DL_IR_HARQ_subburst_IE, MIMO_DL_IR_HARQ_for_CC_subburst_IE, or MIMO_DL_STC_HARQ_subburst_IE). If DL_MAP_IE() is used, the matrix indicator in STC_DL_Zone_IE() shall be used for the allocation with the number of individually encoded streams being 1. If any one of the MIMO-related IEs is used, the matrix indicator in these IEs shall override the matrix indicator in STC_DL_Zone_IE(). A DL zone can be a coordinated zone between the serving BS and all its neighbor BSs that has the same zone boundary, the same zone permutation type e.g., PUSC, STC PUSC, AMC, and STC AMC, and the same values for the parameters, Use All SC and Dedicated Pilots. Within a coordinated DL zone, all the allocations shall have the parameter “boosting” set to 0b000, i.e., not boosted. A frame can have zero, one, or multiple coordinated DL zones. The first PUSC zone can also be a coordinated DL zone. When the first PUSC zone is a coordinated zone, serving BS coordinates with its neighbor BSs have the same zone boundary and use the same “used-subchannel bitmap.” The format for the STC DL Zone IE is shown in Table 330.

Table 330—OFDMA STC DL Zone IE format

Syntax	Size (bit)	Notes
STC_DL_Zone_IE() {	—	—
Extended DIUC	4	STC/DL_Zone_SWITCH = 0x1
Length	4	Length = 0x4
OFDMA symbol offset	8	Denotes the start of the zone (counting from the frame preamble and starting from 0)

Table 330—OFDMA STC DL Zone IE format *(continued)*

Syntax	Size (bit)	Notes
Permutation	2	0b00: PUSC permutation 0b01: FUSC permutation 0b10: Optional FUSC permutation 0b11: Adjacent subcarrier permutation
Use All SC	1	0: Do not use all subchannels 1: Use all subchannels
STC	2	0b00: No STC 0b01: STC using 2/3 antennas 0b10: STC using 4 antennas 0b11: FHDC using 2 antennas

Matrix Indicator	2	STC matrix (see 8.4.8.1.4)
		if (STC == 0b01 or STC == 0b10)
		{
		0b00 = Matrix A
		0b01 = Matrix B
		0b10 = Matrix C
		0b11 = *Reserved*
		}
		else if (STC == 0b11)
		{
		0b00 = Matrix A
		0b01 = Matrix B
		0b10–11 = *Reserved*
		}

DL_PermBase	5	—
PRBS_ID	2	Values: 0..2. Refer to 8.4.9.4.1
AMC type	2	Indicates the AMC type in case permutation type = 0b11, otherwise shall be set to 0. AMC type (NxM = N bins by M symbols): 0b00: 1x6 0b01: 2x3 0b10: 3x2 0b11: *Reserved* Note that only 2x3 band AMC subchannel type (AMC Type = 0b01) is supported by MS
Midamble presence	1	0: Not present 1: MIMO midamble present at the first symbol in STC zone
Midamble boosting	1	0: No boost 1: Boosting (3 dB)
2/3 antennas select	1	0: STC using 2 antennas 1: STC using 3 antennas Selects 2/3 antennas when STC = 0b01
Dedicated Pilots	1	0: Pilot symbols are broadcast 1: Pilot symbols are dedicated. An MS should use only pilots specific to its burst for channel estimation
Reserved	4	Shall be set to zero
}	—	—

Permutation

Indicates the permutation that shall be used by the transmitter for allocations following this IE. Permutation changes are only allowed on a zone boundary. The IDcell indicated by the IE shall be used as the basis of the permutation (see 8.4.6.1).

Use All SC

When set, this field indicates transmission on all available subchannels. For FUSC permutation, transmission is always on all subchannels.

STC

Indicates the STC mode that shall be used by the transmitter for allocations following this IE (see 8.4.8). All allocations with STC = 0b00 shall be transmitted with non-STC pilot pattern. All allocations with STC not set to 0b00 shall be transmitted with the corresponding pilot pattern in 8.4.8. The STC mode change is allowed only on a zone boundary.

DL_PermBase

DL Permutation base for the specified DL zone. When the zone defined by this STC_DL_Zone_IE() is a DL coordinated zone, the DL_PermBase field shall be set to the 5 LSBs of IDcell as indicated by the frame preamble.

PRBS_ID

Values: 0..2. Refer to 8.4.9.4.1. When the zone defined by this STC_DL_Zone_IE() is a DL coordinated zone, the PRBS_ID field shall be set to mod(segment number + 1, 3) as indicated by the frame preamble.

Use All SC

Indicates if all subchannels are used. Applies to PUSC only. When set to 0, do not use all subchannels. When set to 1, use all subchannels. When the zone defined by this STC_DL_Zone_IE() is a DL coordinated zone, the Use All SC field shall be set to the same value as that in the corresponding DL coordinated zones of all its neighbor BSs.

Dedicated Pilots

When the data allocations are precoded/beamformed, then setting the Dedicated Pilots bit to 1 means the pilot symbols are precoded/beamformed in the same way as are the corresponding data subcarriers. In this case, an MS should use only the pilots that are specific to its allocation for channel estimations. In addition, a BS shall toggle CID-Switch IE() such that INC_CID = 1 in all non-HARQ DL-MAP IEs that allocate dedicated pilot zones.

For the PUSC permutation, the pilot symbols belonging to a major group shall be precoded/beamformed along with all of the data allocations made within the major group. For the FUSC or optional FUSC permutation, all of the pilot symbols and data subcarriers within an OFDM symbol shall be precoded/beamformed. The minimum time duration of any allocation in a DL STC zone with dedicated pilots is equal to the pilot period.

For backward compatibility, for the FUSC or optional FUSC permutation, multiple SS units that do not support dedicated pilots shall not be allocated in TD zones in which pilots are dedicated. However, a single legacy SS unit can be allocated to a TD zone in which the pilots are dedicated as long as no other SS units are also allocated to that TD zone. For the PUSC permutation, only a single legacy SS can be allocated to one or more major groups and only when the major groups extend across the entire zone.

Allocations with single antenna pilot pattern can coexist with allocations with multiple antennas pilot pattern in AMC STC zones with dedicated pilots. All allocations with the STC field not set to 0b00 and Dedicated Pilots set to 1 shall transmit the pilots using the pattern (see 8.4.6.1.2 for one antenna and see 8.4.8 for multiple antennas) corresponding to the number of streams instead of the actual number of transmit antennas. By default, the number of streams shall be equal to the number of antennas specified by the STC Zone Switch IE and may be overridden by the burst allocations given in the Num_Streams field of the CL_MIMO_DL_Enhanced_IE or Dedicated_MIMO_DL_Control_IE.

When the zone defined by this STC_DL_Zone_IE() is a DL coordinated zone, the Dedicated Pilots field shall be set to the same value as that in the corresponding DL coordinated zones of all its neighbor BSs.

Permutation
Indicates the permutation that shall be used by the transmitter for allocations following this IE. Permutation changes are only allowed on a zone boundary. The DL PermBase indicated by the IE shall be used as the basis of the permutation.

Midamble presence
When set, midamble shall be transmitted in the first symbol of the zone with the corresponding antenna configuration specified in the STC zone IE (see 8.4.8.5).

This IE should not be used within SUB-DL-UL-MAP.

8.4.5.3.5 Channel Measurement IE

An extended IE with an extended DIUC = 0x00 is issued by the BS to request a channel measurement report (see 6.3.15). The IE includes an 8-bit Channel Nr value as shown in Table 331.

Table 331—OFDMA Channel Measurement IE

Syntax	Size (bit)	Notes
Channel_Measurement_IE() {	—	—
Extended DIUC	4	CHM = 0x0
Length	4	Length = 0x4
Channel Nr	8	Channel number (see 8.5.1) Set to zero for bands outside the 5GHz to 6GHz band and licensed bands within the 5GHz to 6GHz band.
OFDMA symbol offset	8	—
CID	16	Basic CID of the SS for which the Channel Measurement IE is directed.
}	—	—

8.4.5.3.6 Data Location In Another BS IE

In the DL-MAP, a BS may transmit DIUC = 15 with the Data_Location_in_Another_BS_IE() to indicate that data are transmitted to the SS through another BS. This IE shall be sent right after the IE defining the same data received in the current BS, but it may be sent alone without the IE defining the same data received in the current BS only if the data are to be transmitted in the current frame.

Table 332—OFDMA Data Location in another BS IE

Syntax	Size (bit)	Notes
Data_Location_in_Another_BS_IE() {	—	—
Extended DIUC	4	Data_location_in_another_BS = 0x3
Length	4	Length = 0x9

Table 332—OFDMA Data Location in another BS IE *(continued)*

Syntax	Size (bit)	Notes
Segment	2	Segment number
Used subchannels	6	Used subchannel groups at other BS Bit 0: Subchannel group 0 Bit 1: Subchannel group 1 Bit 2: Subchannel group 2 Bit 3: Subchannel group 3 Bit 4: Subchannel group 4 Bit 5: Subchannel group 5
DIUC	4	DIUC used for the burst in the other BS
Frame Advance	3	The number of frames offset from the next frame where the data will be transmitted (0 = Next frame)
Reserved	1	Shall be set to zero
OFDMA Symbol offset	8	—
Subchannel offset	6	—
Boosting	3	000: Normal (not boosted); 001: +6dB; 010: –6dB; 011: +9dB; 100: +3dB; 101: –3dB; 110: –9dB; 111: –12dB;
Preamble index	7	Preamble index of the other BS
No. OFDM Symbols	8	—
No. Subchannels	6	—
Repetition Coding Indication	2	00: No repetition coding 01: Repetition coding of 2 used 10: Repetition coding of 4 used 11: Repetition coding of 6 used
CID	16	—
}		—

8.4.5.3.7 CID Switch IE

In the DL-MAP, a BS may transmit DIUC = 15 with the CID-Switch_IE() to toggle the inclusion of the CID parameter in DL-MAP allocations. The DL-MAP and SUB-DL-UL-MAP shall begin in the mode where CIDs are not included. The first appearance of the CID-Switch_IE() shall toggle the DL-MAP mode to include CIDs. Any subsequent appearance of the CID-Switch_IE() shall toggle the DL-MAP CID inclusion mode.

The format for the DL CID Switch IE is shown in Table 333.

Table 333—OFDMA DL CID Switch IE format

Syntax	Size (bit)	Notes
CID-Switch_IE() {	—	—
Extended DIUC	4	CID-Switch = 0x4
Length	4	Length = 0x0
}	—	—

8.4.5.3.8 MIMO DL Basic IE format

In the DL-MAP, a MIMO-enabled BS may transmit DIUC = 14 with the MIMO_DL_Basic_IE() to describe DL allocations assigned to MIMO-enabled SSs. The MIMO mode indicated in the MIMO_DL_Basic_IE() shall only apply to the allocations indicated in the IE. The format for the MIMO DL Basic IE is shown in Table 334. The allowed combinations of number of antennas, matrices, number of encoded streams, and CIDs are listed in Table 335.

Table 334—MIMO DL Basic IE format

Syntax	Size (bit)	Notes
MIMO_DL_Basic_IE() {	—	—
Extended DIUC	4	MIMO = 0xB
Length	8	*Variable*
Num_Region	4	“Number of assigned regions” is this field value plus 1.
for (*i* = 0; *i* < Number of assigned regions; *i*++) {	—	—
OFDMA Symbol offset	8	—
If (Permutation = 0b11 and (AMC type is 2x3 or 1x6)) {	—	—
Subchannel offset	8	—
Boosting	3	—
No. OFDMA Symbols	5	—
No. subchannels	6	—
Else {	—	—
Subchannel offset	6	—
Boosting	3	—
No. OFDMA Symbols	7	—
No. subchannels	6	—

Table 334—MIMO DL Basic IE format *(continued)*

Syntax	Size (bit)	Notes
}	—	—

Matrix_indicator	2	STC matrix (see 8.4.8.1.4)
		if (STC == 0b01 or STC == 0b10)
		{
		0b00 = Matrix A
		0b01 = Matrix B
		0b10 = Matrix C
		0b11 = *Reserved*
		}
		else if (STC == 0b11)
		{
		0b00 = Matrix A
		0b01 = Matrix B
		0b10–11 = *Reserved*
		}

Num_layers	2	0b00 = 1 layer; 0b01 = 2 layers; 0b10 = 3 layers, 0b11 = 4 layers.
Reserved	2	Shall be set to zero
for (*j* = 0; *j* < Number of Layers; *j*++) {	—	—
if (INC_CID == 1) {	—	—
CID	16	—
}	—	—
Layer_index	2	—
DIUC	4	—
Repetition coding indication	2	0b00: No repetition coding 0b01: Repetition coding of 2 used 0b10: Repetition coding of 4 used 0b11: Repetition coding of 6 used
}	—	—
}	—	—
Padding	*variable*	Number of bits required to align to byte length; shall be set to zero
}	—	—

Num_Region

This field indicates the number of the regions defined by the OFDMA Symbol Offset, Subchannel Offset, Boosting, No. OFDMA Symbols, and No. Subchannels fields in this IE. The actual number of assigned regions is this field value plus 1.

Matrix_indicator

The values of these 2 bits indicate the STC matrix (see 8.4.8.1.4).

Num_layer

Number of individually encoded streams allocated in the region. The layer is defined as a separate coding/modulation path.

Layer_index
This field specifies the layer index.

Table 335 defines the modes of operation specified by MIMO_DL_Basic_IE() and MIMO_DL_Enhanced_IE(). For each information element, the table details the number of antennas (as indicated by the latest STC_DL_Zone_IE()), the type of matrix, the number of encoded streams (i.e., the number of different CIDs stated in the Num_layers "for" loop in Table 334), and the implicit type and rate of coding. The cases of either Broadcast CID or (INC_CID == 0) correspond to single CID rows, but should be decoded by all SSs on a BE basis. An SS that does not support decoding of multiple overlapping bursts shall attempt to decode the first burst relevant to it, according to the stream ordering. If Dedicated Pilots is set to 1, all references to the number of Tx antennas in this subclause apply to the number of streams.

Table 335—DL MIMO operation modes

Number of Tx antennas	Matrix indicator	Num_ layers	Number of different SSs	Encoding type	Rate	Mapping of encoded stream to matrix entries	Remark
2	A	1	1	STTD	1	Encoded stream #0: S1, S2	—
2	B	1	1	Vertical encoding	2	Encoded stream #0: S1, S2	—
2	B	2	1	Horizontal encoding for a single SS	2	Encoded stream #0: S1 Encoded stream #1: S2	Two overlapping layers
2	B	2	2	Horizontal encoding for two different SSs	2	Encoded stream #0: S1 Encoded stream #1: S2	Two overlapping layers
4	A	1	1	STTD	1	Encoded stream #0: S1, S2, S3, S4	—
4	B	1	1	Vertical encoding	2	Encoded stream #0: S1, S2, S3, S4	—
4	B	2	1	Horizontal encoding for a single SS	2	Encoded stream #0: S1, S2, S5, S7 Encoded stream #1: S3, S4, S6, S8	Two overlapping layers
4	B	2	2	Horizontal encoding for two different SSs	2	Encoded stream #0: S1, S2, S5, S7 Encoded stream #1: S3, S4, S6, S8	Two overlapping layers

Table 335—DL MIMO operation modes *(continued)*

Number of Tx antennas	Matrix indicator	Num_ layers	Number of different SSs	Encoding type	Rate	Mapping of encoded stream to matrix entries	Remark
4	C	1	1	Vertical encoding	4	Encoded stream #0: S1, S2, S3, S4	—
4	C	4	1	Horizontal encoding for a single SS	4	Encoded stream #0: S1 Encoded stream #1: S2 Encoded stream #2: S3 Encoded stream #3: S4	Four overlapping layers
4	C	4	> 1	Horizontal encoding for two or more different SSs	4	Encoded stream #0: S1 Encoded stream #1: S2 Encoded stream #2: S3 Encoded stream #3: S4	Four overlapping layers

Vertical encoding

Indicates transmitting a single FEC-encoded stream over multiple antennas. The number of encoded streams is always 1.

Horizontal encoding

Indicates transmitting multiple separately FEC-encoded streams over multiple antennas. The number of encoded streams is more than 1.

Rate

The number of QAM symbols signaled per array channel use.

8.4.5.3.9 MIMO DL Enhanced IE format

In the DL-MAP, a MIMO-enabled BS may transmit DIUC = 14 with the MIMO_DL_Enhanced_IE(), as shown in Table 336, to describe DL allocations assigned to MIMO-enabled SSs, each identified by the CQICH_ID previously assigned to the SS. The MIMO mode indicated in the MIMO_DL_Enhanced_IE() shall only apply to the allocations indicated in the IE. The allowed combinations of number of antennas, matrices, number of encoded streams, and CIDs are listed in Table 335.

Table 336—MIMO DL Enhanced IE format

Syntax	Size (bit)	Notes
MIMO_DL_Enhanced_IE() {	—	—
Extended-2 DIUC	4	EN_MIMO = 0xC
Length	8	—

Table 336—MIMO DL Enhanced IE format *(continued)*

Syntax	Size (bit)	Notes
Num_Region	4	"Number of assigned regions" is this field value plus 1.
for (*i* = 0; *i* < Number of assigned regions; *i*++) {	—	—
OFDMA Symbol offset	8	—
If (Permutation = 0b11 and (AMC type is 2x3 or 1x6)) {	—	—
Subchannel offset	8	—
Boosting	3	—
No. OFDMA Symbols	5	—
No. subchannels	6	—
else {	—	—
Subchannel offset	6	—
Boosting	3	—
No. OFDMA Symbols	7	—
No. subchannels	6	—
}	—	—

Matrix_indicator	2	STC matrix (see 8.4.8.1.4)
		if (STC == 0b01 or STC == 0b10)
		{
		0b00 = Matrix A
		0b01 = Matrix B
		0b10 = Matrix C
		0b11 = *Reserved*
		}
		else if (STC == 0b11)
		{
		0b00 = Matrix A
		0b01 = Matrix B
		0b10–11 = *Reserved*
		}

Num_layers	2	0b00 = 1 layer, 0b01 = 2 layers, 0b10 = 3 layers, 0b11 = 4 layers
Reserved	2	Shall be set to zero
for (*j* = 0; *j* < Number of Layers; *j*++) {	—	—
if (INC_CID == 1) {	—	—
CQICH_ID	*variable*	Index to uniquely identify the CQICH resource assigned to the SS. The size of this field is dependent on system parameter defined in UCD (see Table 571).
}	—	—

Table 336—MIMO DL Enhanced IE format *(continued)*

Syntax	Size (bit)	Notes
Layer_index	2	—
DIUC	4	—
Repetition coding indication	2	0b00: No repetition coding 0b01: Repetition coding of 2 used 0b10: Repetition coding of 4 used 0b11: Repetition coding of 6 used
}	—	—
}	—	—
Padding	*variable*	Number of bits required to align to byte length, shall be set to zero.
}	—	—

Num_Region
This field indicates the number of the regions defined by OFDMA Symbol Offset, Subchannel Offset, Boosting, No. OFDMA Symbols, and No. Subchannels fields in this IE. The actual number of assigned regions is this field value plus 1.

Matrix_indicator
The values of these 2 bits indicate the STC matrix (see 8.4.8.1.4).

CQICH_ID
This is the CQICH_ID assigned to an SS in the CQICH_Alloc_IE(). The CQICH_ID is used to uniquely identify an SS that is assigned a CQICH.

Num_layers
Number of individually encoded streams allocated in the region. The layer is defined as a separate coding/modulation path.

Layer_index
This field specifies the layer index.

8.4.5.3.10 HARQ and Sub-MAP Pointer IE

This IE shall only be used by a BS supporting HARQ of SUB-DL-MAP for MSs supporting HARQ. There shall be at most four HARQ MAP Pointer IEs in the DL-MAP. There shall be at most 3 SUB-DL-UL-MAP pointer IEs per frame, as specified in 6.3.2.3.55. Table 337 shows the format for the HARQ and Sub-MAP Pointer IE.

Table 337—HARQ and Sub-MAP Pointer IE format

Syntax	Size (bit)	Notes
HARQ_and_Sub-MAP_Pointer_IE() {	—	—
Extended DIUC	4	HARQ_P = 0x7
Length	4	—
While (data remains) {	—	—

Table 337—HARQ and Sub-MAP Pointer IE format *(continued)*

Syntax	Size (bit)	Notes
DIUC	4	Indicates the MCS level of the burst containing a HARQ MAP message or Sub-DL-UL-MAP message.
No. Slots	8	The number of slots allocated for the burst containing a HARQ MAP message or Sub-DL-UL-MAP message.
Repetition Coding Indication	2	0b00: No repetition coding 0b01: Repetition coding of 2 used 0b10: Repetition coding of 4 used 0b11: Repetition coding of 6 used
MAP Version	2	0b00: HARQ MAPv1 0b01: Submap 0b10: Submap with CID mask included 0b11: *Reserved*
If (MAP Version == 0b10) {	—	—
Idle users	1	Bursts for idle users included in the submap
Sleep users	1	Bursts for sleep users included in the submap
CID Mask Length	2	0b00: 12 bits 0b01: 20 bits 0b10: 36 bits 0b11: 52 bits
CID mask	*n*	*n* = The number of bits of CID mask is determined by CID Mask Length. When the MAP message pointed by this pointer IE includes any MAP IE for an MS that is not in either sleep mode or idle mode, the bit index corresponding to [(Basic CID of the MS) MOD *n*] in this CID Mask field shall be set to 1. Otherwise, it shall be set to 0.
}	—	—
}	—	—

DIUC

Indicates the burst profile used for the HARQ MAP message or Sub-DL-UL-MAP message.

No. Slots

The number of OFDMA slots allocated for the burst containing a HARQ MAP message or Sub-DL-UL-MAP message. The HARQ MAP message, if any, shall immediately follow the Compressed MAP with the number of the slots allocated for the HARQ MAP message. The specification on the allocation of Sub-DL-UL-MAPs is described in 6.3.2.3.55.

Repetition Coding Indication

Indicates the repetition code used inside the allocated burst.

MAP Version

Indicates the version of the pointed MAP, that is, the HARQ MAP or Sub-DL-UL-MAP.

8.4.5.3.11 DL-MAP Physical Modifier IE

The Physical Modifier Information Element indicates that the subsequent allocations shall utilize a preamble, which is either cyclically delayed in time or cyclically rotated in frequency. The physical modifier type defined in this IE applies to all the subsequent allocations until terminated by a Zone_Switch_IE, AAS_DL_IE, a SUB-DL-UL-MAP or the end of the DL subframe. This IE applies to operation in AAS mode.

In the case when the preamble is cyclically delayed in time by K samples, the preamble will contribute a component s'(t) to the transmitted waveform as defined in Equation (59). This IE applies to operation in AAS mode.

$$s'(t) = \mathrm{Re}\left\{ e^{2j\pi f_c t} \left(\sum_{m=-(N_{used}-1)/2}^{(N_{used}-1)/2} c_m \times e^{2j\pi m \Delta f (t - T_g - K/F_s)} \right) \right\} \tag{59}$$

where

c_m are the preamble tone values
t is the time, elapsed since the beginning of the OFDMA symbol, with $0 < t < T_s$

The PHYMOD DL IE can appear anywhere in the DL-MAP, and it shall remain in effect until another PHYMOD DL IE is encountered, or until the end of the DL-MAP.

In the case when the preamble is cyclically shifted in frequency, the preamble subcarriers will be shifted so that

$$C_{New,K} = (C_{Original} + 5 \times K) \bmod N_{Used} \tag{60}$$

where

$C_{New,K}$ is the new subcarrier index
$C_{Original}$ is the original subcarrier index
K is the frequency shift index indicated in the PHYMOD DL IE

The format for the DL-MAP Physical Modifier IE is shown in Table 338.

Table 338—OFDMA DL-MAP Physical Modifier IE format

Syntax	Size (bit)	Notes
PHYMOD_DL_IE() {	—	—
Extended DIUC	4	PHYMOD = 0x8
Length	4	Length = 0x1
Preamble Modifier Type	1	0: Frequency-shifted preamble 1: Time-shifted preamble

Table 338—OFDMA DL-MAP Physical Modifier IE format *(continued)*

Syntax	Size (bit)	Notes
if (Preamble Modifier Type == 0) {	—	—
Preamble frequency shift index	4	Indicates the value of K in Equation (60)
} else {	—	—
Preamble Time Shift Index	4	Specifies the cyclic time shift in Equation (59): For PUSC, 0 – 0 sample cyclic shift 1 – N_{FFT}/14 sample cyclic shift …. 13 – N_{FFT}/14×13 sample cyclic shift 14–15 – *Reserved* For AMC permutation, 0 – 0 sample cyclic shift 1 – N_{FFT}/9 sample cyclic shift …. 8 – N_{FFT}/9×8 sample cyclic shift 9–15 – *Reserved*
}	—	—
Pilot Pattern Modifier	1	0: Not applied 1: Applied
Pilot Pattern Index	2	Pilot pattern used for this allocation [see 8.4.6.3.3 (AMC), 8.4.6.1.2.6 (TUSC)]: 0b00 – Pilot pattern A 0b01 – Pilot pattern B 0b10 – Pilot pattern C 0b11 – Pilot pattern D
}	—	—

Preamble Modifier Type

This parameter defines whether the preamble will be cyclically shifted in time or in frequency.

Preamble frequency shift index

This parameter effects the cyclic shift of the preamble in frequency axis, as defined by Equation (60).

Preamble Time Shift Index

This parameter defines how many samples of cyclic shift shall be introduced into the preamble symbols. The unit of cyclic shift depends on the subchannel permutation to ensure the frequency-domain orthogonality between the different preambles in the same subchannel.

8.4.5.3.12 MBS MAP IE

In the DL-MAP, a BS may transmit DIUC = 14 with the MBS_MAP_IE() to indicate when the next data for a multicast and broadcast service flow will be transmitted. The offset value is associated with a CID value, and indicates the frame that the next data will be transmitted in by using the CID value. (See Table 339.) The MBS MAP message allocation parameters shall be included in the MBS MAP IE at regular intervals and if the MBS MAP message allocation parameters change. MBS MAP IE is used to specify the MBS permutation zone. When an MBS permutation zone exists in a frame, BS shall transmit MBS_MAP_IE with

MBS permutation zone defined = 1. The MBS permutation zone shall not use Adjacent subcarrier permutation.

When a BS needs to transmit Emergency Service Message in an MBS region, the BS shall transmit an MBS_MAP_IE() with MBS permutation zone defined = 1 and Existence of Emergency Service Message = 1. If there is MBS_MAP IE in a DL-MAP message, MS shall decode it and check whether Emergency Service Message(s) will be transmitted or not through an MBS permutation zone. If the MS supporting the CS type used for ES detects the existence of Emergency Service Message(s) in the MBS region, the MS shall decode the MBS-MAP message in order to identify the MBS data burst on which MAC PDU containing Emergency Service Message(s) will be transmitted.

Table 339—MBS MAP IE

Syntax	Size (bit)	Notes
MBS_MAP_IE() {	—	—
Extended-2 DIUC	4	MBS MAP IE = 0x0
Length	8	—
MBS Zone identifier	7	MBS Zone identifier corresponds to the identifier provided by the BS at connection initiation
MBS permutation zone defined	1	0: MBS data burst is defined 1: MBS permutation zone is defined
If(MBS permutation zone defined = 1){	—	—
Permutation	2	0b00: PUSC permutation 0b01: FUSC permutation 0b10: Optional FUSC permutation 0b11: Adjacent subcarrier permutation
DL_PermBase	5	—
PRBS_ID	2	—
OFDMA Symbol Offset	7	The offset of the OFDMA symbol measured in OFDMA symbols from beginning of the DL frame in which the DL-MAP is transmitted. Counting from the frame preamble and starting from 0
MBS MAP message allocation included indication	1	Used to indicate if the MBS MAP message allocation parameters are included
Existence of Emergency Service Message	1	0: Indicates that there is no Emergency Service Message(s) in MBS region 1: Indicates that there is MBS_DATA_IE for Emergency Service Message in an MBS-MAP message
Reserved	2	Shall be set to zero
if (MBS MAP message allocation included indication = 1) {	—	—
Reserved	3	—
Boosting	3	Refer to Table 321

Table 339—MBS MAP IE *(continued)*

Syntax	Size (bit)	Notes
DIUC	4	—
No. Subchannels	6	Indication of burst size of MBS MAP message with the number of subchannels
NO. OFDMA symbols	6	Indication of burst size of MBS MAP message with the number of OFDMA symbols
Repetition Coding Indication	2	0b00—No repetition coding 0b01—Repetition coding of 2 used 0b10—Repetition coding of 4 used 0b11—Repetition coding of 6 used
}	—	—
} else {	—	—
DIUC	4	—
CID	16	CID for Single BS MBS service
OFDMA Symbol Offset	8	The offset of the first OFDMA symbol of the MBS region measured in OFDMA symbols from beginning of this DL frame
Subchannel offset	6	The lowest index OFDMA subchannel used for carrying the burst, starting from subchannel 0
Boosting	3	Refer to Table 321
SLC_3_indication	1	Used to notify sleep mode class 3 is used for single BS MBS service
NO. OFDMA Symbols	6	—
NO. Subchannels	6	—
Repetition Coding Indication	2	0b00—No repetition coding 0b01—Repetition coding of 2 used 0b10—Repetition coding of 4 used 0b11—Repetition coding of 6 used
if (SLC 3_indication = 1) {	—	—
Next MBS_MAP_IE Frame Offset	8	The Next MBS_MAP_IE Frame Offset value is lower 8 bits of the frame number in which the BS shall transmit the next MBS MAP IE frame
}	—	—
}	—	—
if !(byte boundary) {	—	—
Padding Nibble	*variable*	Padding to reach byte boundary
}	—	—
}	—	—

MBS permutation zone defined

Specifies method of allocation and location of MBS data bursts. If this value is 1, an MBS permutation zone is defined in the frame and MBS data burst allocations occur via MBS MAP message located in the MBS permutation zone. If this value is 0, a single MBS data burst allocation is specified directly by the MBS MAP IE.

Next MBS_MAP_IE Frame Offset

The Next MBS_MAP_IE Frame Offset value is the lower 8 bits of the frame number in which the BS shall transmit the next MBS MAP IE frame.

The burst carrying MBS MAP message shall be located at the first subchannel and first OFDMA symbol of the DL permutation zone designated for the MBS zone that is specified by the MBS MAP IE. This burst shall be located in the same frame as the MBS MAP IE that specifies it. The location of this DL permutation zone designated for the MBS zone within the frame is specified by 'OFDMA Symbol Offset' in MBS MAP IE.

The MS should read the DL MAP for any frame in which it expects to receive MBS bursts or MBS MAP messages to capture any possible change in the location of MBS permutation zone.

8.4.5.3.13 DL PUSC Burst Allocation in Other Segment IE

In the DL-MAP, a BS may transmit DIUC = 15 with the DL_PUSC_Burst_Allocation_in_Other_Segment_IE() to indicate that data is transmitted to the MS in other segment through other BS. (See Table 340.)

Table 340—DL PUSC Burst Allocation in Other Segment IE

Syntax	Size (bit)	Notes
DL_PUSC_Burst_Allocation_in_Other_Segment_IE() {	—	—
Extended DIUC	4	DL PUSC Burst Allocation in Other Segment IE = 0xB
Length	4	Length = 0xA
CID	16	—
DIUC	4	—
Segment	2	Segment number for other BS's sector
Boosting	3	Refer to Table 321
IDcell	5	Cell ID for other BS's sector
DL_PermBase	5	—
PRBS_ID	2	—
Repetition coding indication	2	0b00: No repetition coding 0b01: Repetition coding of 2 used 0b10: Repetition coding of 4 used 0b11: Repetition coding of 6 used

Table 340—DL PUSC Burst Allocation in Other Segment IE *(continued)*

Syntax	Size (bit)	Notes
Used Subchannels	6	Used subchannels groups at other BS's sector: Bit 0: Subchannel group 0 Bit 1: Subchannel group 1 Bit 2: Subchannel group 2 Bit 3: Subchannel group 3 Bit 4: Subchannel group 4 Bit 5: Subchannel group 5
OFDMA symbol offset	8	—
Reserved	1	Shall be set to zero
# OFDMA symbols	7	—
Subchannel offset	6	—
# subchannels	6	—
Reserved	7	Shall be set to zero
}	—	—

8.4.5.3.14 HO Anchor Active DL MAP IE

This MAP IE is in the DL-MAP of active non-anchor BS and indicates the burst from Anchor BS. When an MS receives an HO Anchor Active DL-MAP IE on DL-MAP message from an active non-anchor BS, it can decode a data burst transmitted from Anchor BS by using the anchor preamble in HO Anchor Active DL-MAP IE. (See Table 341.)

Table 341—HO Anchor Active DL MAP IE

Syntax	Size (bit)	Notes
HO_Anchor_Active_DL_MAP_IE() {	—	—
Extended-2 DIUC	4	HO Anchor Active MAP IE = 0x2
Length	8	*variable*
for (each bursts) {	—	—
Anchor Preamble	8	Preamble of anchor BS
Anchor CID	16	Basic CID in anchor BS
DIUC	4	—
OFDMA symbol offset	8	—
Subchannel offset	6	—

Table 341—HO Anchor Active DL MAP IE *(continued)*

Syntax	Size (bit)	Notes
Repetition coding indication	2	0b00—No repetition coding 0b01—Repetition coding of 2 used 0b10—Repetition coding of 4 used 0b11—Repetition coding of 6 used
}	—	—
padding nibble	0 or 4	Shall be set to zero
}	—	—

8.4.5.3.15 HO Active Anchor DL MAP IE

This MAP IE is in the DL-MAP of the anchor BS and indicates the burst from active non-anchor BS. When an MS receives an HO Active Anchor DL-MAP IE on DL-MAP message from an Anchor BS, it can decode a data burst transmitted from the active non-anchor BS by using the active preamble in HO Active Anchor DL-MAP IE. (See Table 342.)

Table 342—HO Active Anchor DL MAP IE format

Syntax	Size (bit)	Notes
HO_Active_Anchor_DL_MAP_IE() {	—	—
Extended-2 DIUC	4	HO Active Anchor MAP IE = 0x1
Length	8	*Variable*
for (each bursts) {	—	—
Active Preamble	8	Preamble of active BS
Anchor CID	16	Basic CID in anchor BS
DIUC	4	—
OFDMA symbol offset	8	—
Repetition coding indication	2	0b00: No repetition coding 0b01: Repetition coding of 2 used 0b10: Repetition coding of 4 used 0b11: Repetition coding of 6 used
Subchannel offset	6	—
# OFDMA symbols	7	—
# subchannels	6	—
Boosting	3	Refer to Table 321
}	—	—
padding nibble	0 or 4	Shall be set to zero
}	—	—

8.4.5.3.16 HO CID Translation MAP IE

The HO burst from active non-anchor BS is indicated by the MAP IE in DL-MAP of that BS with an Active CID. The Active CID is the CID assigned by the active non-anchor BS to translate the CID given by the Anchor BS.

Because the CID is different from the anchor CID, the CID Translation MAP IE should provide translation of the Active CID into the Anchor CID. This translation IE is transmitted by Active non-anchor BS and applied on both DL and UL IEs. The translation is valid only in the current frame. (See Table 343.)

Table 343—HO CID Translation MAP IE format

Syntax	Size (bit)	Notes
HO_CID_Translation_MAP_IE() {	—	—
Extended-2 DIUC	4	CID Translation MAP IE = 0x3
Length	8	*Variable*
for (each bursts) {	—	—
Anchor Preamble	8	Preamble of anchor BS
Anchor CID	16	Basic CID in anchor BS
Active CID	16	—
}	—	—
}	—	—

8.4.5.3.17 MIMO in Another BS IE

In the DL-MAP, a BS may transmit MIMO_in_Another_BS_IE() to indicate that data is transmitted to the MS through other BS at the same frame. This IE shall be right after the IE defining the same data or data region received in the anchor BS. (See Table 344.)

Table 344—MIMO in Another BS IE format

Syntax	Size (bit)	Notes
MIMO_in_Another_BS_IE() {	—	—
Extended-2 DIUC	4	MIMO in Another BS IE = 0x4
Length	8	*variable*
Segment	2	Segment number

Table 344—MIMO in Another BS IE format *(continued)*

Syntax	Size (bit)	Notes
Used subchannels groups	6	Used subchannels groups at other BS Bit 0: Subchannel group 0 Bit 1: Subchannel group 1 Bit 2: Subchannel group 2 Bit 3: Subchannel group 3 Bit 4: Subchannel group 4 Bit 5: Subchannel group 5
IDCell	5	Cell ID of other BS
Num_Region	4	—
Reserved	3	Shall be set to zero
for (*i* = 0; *i* < Num_Region; *i*++) {	—	—
OFDMA Symbol offset	8	—
if(Permutation == 0b11 and (AMC type is 2x3 or 1x6)) {	—	—
Subchannel offset	8	—
Boosting	3	Refer to Table 321
No. OFDMA Symbols	5	—
No. subchannels	6	—
} else {	—	—
Subchannel offset	6	—
Boosting	3	Refer to Table 321
No. OFDMA Symbols	7	—
No. subchannels	6	—
}		
Matrix indicator	2	See matrix indicator defined in STC_DL_Zone_IE
Num_layer	2	0b00 = 1 layer, 0b01 = 2 layers 0b10 = 3 layers, 0b11 = 4 layers
for (*j* = 0; *j* < Number of Layers; *j*++) {	—	—
if (INC_CID == 1) {	—	—
CID	16	—
}	—	—
Layer_index	2	—
DIUC	4	0–11 burst profiles
Repetition coding indication	2	0b00: No repetition coding 0b01: Repetition coding of 2 used 0b10: Repetition coding of 4 used 0b11: Repetition coding of 6 used

Table 344—MIMO in Another BS IE format *(continued)*

Syntax	Size (bit)	Notes
}	—	—
}	—	—
Padding	*variable*	Padding to byte; shall be set to 0
}	—	—

8.4.5.3.18 Macro-MIMO DL Basic IE format

Table 345 specifies DL-MAP IE for Macro-MIMO in MDHO mode, which benefits from a combination of RF, diversity combining, and soft data combining.

Table 345—Macro MIMO DL Basic IE()

Syntax	Size (bit)	Notes
Macro_MIMO_DL_Basic_IE() {	—	—
Extended-2 DIUC	4	Macro MIMO DL Basic IE = 0x5
Length	8	*Variable*
Segment	2	Segment number
Used subchannels	6	Used subchannels groups at other BS's sector: Bit 0: Subchannel group 0 Bit 1: Subchannel group 1 Bit 2: Subchannel group 2 Bit 3: Subchannel group 3 Bit 4: Subchannel group 4 Bit 5: Subchannel group 5
Num_Region	4	—
for (*i* = 0; *i* < Num_Region; *i*++) {	—	—
OFDMA Symbol offset	8	—
if(Permutation == 0b11 and (AMC type is 2x3 or 1x6)) {	—	—
Subchannel offset	8	—
Boosting	3	Refer to Table 321
No. OFDMA symbols	5	—
No. Subchannels	6	—
} else {	—	—
Subchannel offset	6	—
Boosting	3	Refer to Table 321

Table 345—Macro MIMO DL Basic IE() *(continued)*

Syntax	Size (bit)	Notes
No. OFDMA symbols	7	—
No. Subchannels	6	—
}	—	—
Packet index	4	Packet index for each region
Matrix indicator	2	See matrix indicator defined in STC DL Zone IE
Num_layer	2	0b00 = 1 layer, 0b01 = 2 layers 0b10 = 3 layers, 0b11 = 4 layers
Reserved	2	Shall be set to zero
for (*j* = 0; *j* < Number of Layers; *j*++) {	—	—
if (INC_CID == 1) {	—	—
CID	16	—
}	—	—
Layer_index	2	—
DIUC	4	0–11 burst profiles
Repetition coding indication	2	0b00: No repetition coding 0b01: Repetition coding of 2 used 0b10: Repetition coding of 4 used 0b11: Repetition coding of 6 used
}	—	—
}	—	—
Padding	*variable*	Padding to byte; shall be set to zero
}	—	—

Packet Index

Indicates the packet index for the particular region. The regions with the same packet index shall be diversity combined at MS.

8.4.5.3.19 UL Noise and Interference Level IE format

For the open-loop power control, UL interference and noise level shall be broadcast to MSs in the given BS coverage by BS. UL interference and noise level IE broadcast the UL interference and noise level (dBm) estimated in BS. All the UL interference and noise level are quantized in 0.5 dBm steps from –150 dBm (encoded 0x00) to –22.5 dBm (encoded 0xFF). (See Table 346.)

Table 346—UL Interference and Noise Level Extended IE format

Syntax	Size (bit)	Notes
UL_Interference_and_Noise_Level_IE() {	—	—
Extended DIUC	4	UL NI = 0xF
Length	4	*Variable*
Bitmap	8	LSB indicates the there exists a CQI/ACK/Periodic Ranging Region NI field (1). Otherwise, it is 0. The 2nd LSB indicates the there exists a PUSC Region NI field (1). Otherwise, it is 0. The 3rd LSB indicates the there exists a Optional PUSC Region NI field (1). Otherwise, it is 0. The 4th LSB indicates the there exists an AMC Region NI field (1). Otherwise, it is 0. The 5th LSB indicates the there exists an AAS Region NI field (1). Otherwise, it is 0. The 6th LSB indicates the there exists a Periodic Ranging Region NI field (1). Otherwise, it is 0. The 7th LSB indicates the there exists a Sounding Region NI field (1). Otherwise, it is 0. The 8th LSB indicates the there exists a MIMO Region NI field (1). Otherwise, it is 0.
if (LSB of Bitmap = 1) {	—	—
CQI/ACK/Periodic Ranging Region NI	8	Estimated average power level (dBm) per a subcarrier in CQI/ACK/periodic ranging region.
}	—	—
if (The 2nd LSB of Bitmap = 1) {	—	—
PUSC region NI	8	Estimated average power level (dBm) per a subcarrier in PUSC region.
}	—	—
if (The 3rd LSB of Bitmap = 1) {	—	—
Optional PUSC region NI	8	Estimated average power level (dBm) per a subcarrier in optional PUSC region.
}	—	—
if (The 4th LSB of Bitmap = 1) {	—	—
AMC region NI	8	Estimated average power level (dBm) per a subcarrier in AMC region.
}	—	—
if (The 5th LSB of Bitmap = 1) {	—	—
AAS region NI	8	Estimated average power level (dBm) per a subcarrier in AAS region. The interference and noise level shall be estimated before the beam forming.
}	—	—
if (The 6th LSB of Bitmap = 1) {	—	—

Table 346—UL Interference and Noise Level Extended IE format *(continued)*

Syntax	Size (bit)	Notes
Periodic ranging region NI	8	Estimated average power level (dBm) per a subcarrier in Periodic ranging region. The interference and noise level shall be estimated before the beam forming. When this field is present, the value for the periodic ranging region indicated in CQI/ACK/Periodic Ranging Region NI field shall be ignored. Instead, the value of this field shall be used for NI level of the periodic ranging region.
}	—	—
if (The 7th LSB of Bitmap = 1) {	—	—
Sounding region NI	8	Estimated average power level (dBm) per a subcarrier in sounding region.
}	—	—
if (The 8th LSB of Bitmap = 1) {	—	—
MIMO region NI	8	Estimated average power level (dBm) per a subcarrier in MIMO region.
}	—	—
}	—	—

The UL interference and noise level that is indicated in the latest IE shall be used if necessary. The MS that supports open loop power control shall decode the UL noise and interference level IE even if it is in closed loop power control mode and save the values for future use (i.e., BS changes the MS's power control mode to open loop). The BS should ensure that the MS has had a chance to receive the fields required for proper power control mode change in the UL noise and interference IE by properly setting the start-frame field in the PMC-RSP message to point after the frame that contains a transmission of the noise and interference IE following the MS's network entry (the transmission of the UL noise and interference level IE might be before the frame in which the PMC-RSP was sent). After the first reception of the UL noise and interference IE, the MS may use the same noise and interference levels until it receives updated noise and interference levels. If the MS is in open loop power control mode and receives an UL allocation before a successful reception of any noise and interference IE, the MS may transmit by using the transmission power level calculated with Equation (132), where the noise and interference levels are estimated from the last transmission power level in closed loop using the equation for the corresponding UIUC.

8.4.5.3.20 Dedicated DL Control IE

Dedicated DL Control IE contains additional control information for each subburst in the Table 350. Because each subburst may have its own control information format dependent on the MS capability, the length of the Dedicated DL Control IE is variable. (See Table 347.)

Table 347—Dedicated DL Control IE format

Syntax	Size (bit)	Notes
Dedicated_DL_Control_IE() {	—	—
Length	4 bits	Length of following control information in Nibble.
Control header	4 bits	Bit 0: SDMA Control InfoBit Bits #1–3: *Reserved*
If (SDMA Control Info Bit == 1){	—	—
Num SDMA layers	2 bits	This value plus one indicates the total number of SDMA layers associated with the HARQ DL MAP IE.
}	—	—
Padding bits	*variable*	—
}	—	—

SDMA Control Info

The Dedicated DL Control IE with SDMA Control Info = 1 shall be present within the first subburst allocation of each layer of SDMA allocations (including the first layer). Each SDMA layer has is own pilot pattern (layer *n* uses the pilot pattern defined for antenna *n*, see 8.4.8). When the SDMA control info is present, the OFDMA Symbol offset and Subchannel offset shall be reset to the beginning of the two dimensional data region defined in the HARQ DL MAP IE.

For allocations specified in an AAS zone with PUSC permutation, the Num SDMA Layers value shall be identical in all Dedicated DL Control IEs that describe allocations in the same major group.

8.4.5.3.20.1 Reduced CID IE

Table 348 presents the format of reduced CID. BS may use reduced CID instead of basic CID or multicast CID to reduce the size of HARQ MAP message. The type of reduced CID is determined by BS considering the range of basic CIDs of SS connected with the BS and specified by the RCID_Type field of the Format Configuration IE.

The reduced CID is composed of 1 bit of prefix and *n*-bits of LSB of CID of SS. The prefix is set to 1 for the Broadcast CID or Multicast Polling CID and set to 0 for basic CID. The reduced CID cannot be used instead of Transport, Primary Management, or Secondary Management CID.

Figure 237 shows the decoding of reduced CID when the RCID_Type is set to 1.

Table 348—RCID IE format

Syntax	Size (bit)	Notes
RCID_IE() {	—	—
if (RCID_Type == 0){	—	—
CID	16	Normal CID
}else{	—	—
Prefix	1	For multicast, AAS, Padding and broadcast burst temporary disable RCID
if (Prefix == 1){	—	—
RCID 11	11	11 LSBs of multicast, AAS, or Broadcast CID
}else{	—	—
if (RCID_Type == 1){	—	—
RCID 11	11	11 LSBs of basic CID
} else if (RCID_Type == 2){	—	—
RCID 7	7	7 LSBs of Basic CID
} else if (RCID_Type == 3){	—	—
RCID 3	3	3 LSBs of Basic CID
}	—	—
}	—	—
}	—	—
}	—	—

CID

Normal 16 bits CID

Prefix

A value of one indicates that 11 bits RCID for broadcast and multicast follows the prefix. Otherwise, the *n*-bits RCID for basic CID follows the prefix. The value of *n* is determined by the RCID_Type field in Format Configuration IE.

RCID n

n-bits LSB of CID

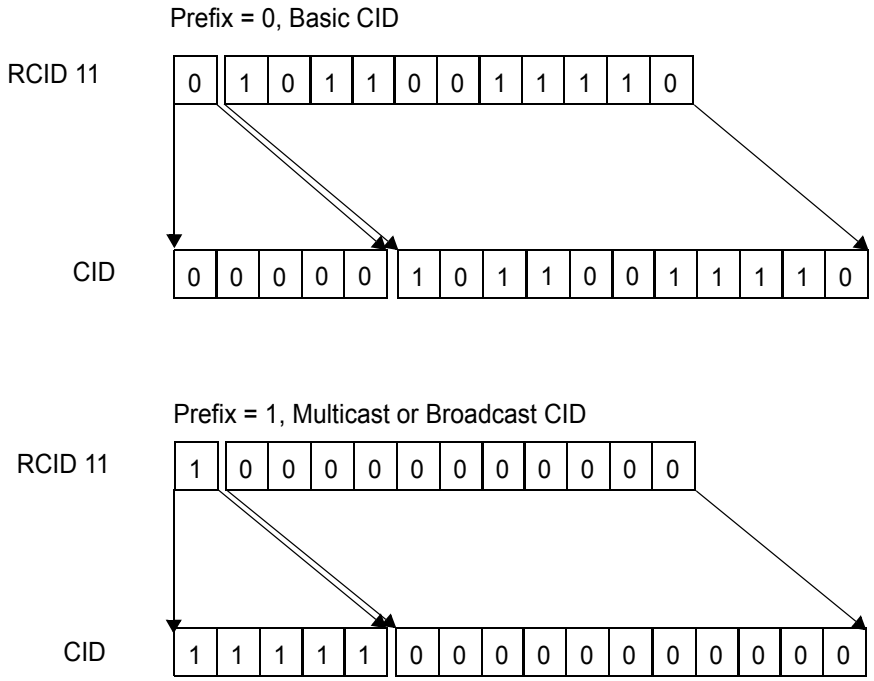

Figure 237—Reduced CID decoding

8.4.5.3.20.2 Skip IE

This IE may be sent by BS in the mandatory DL-MAP as a broadcast IE. This IE is used to indicate to mobility enabled MS (negotiated through capability exchange in REG-REQ and REG-RSP, defined in 11.7.12.1) whether to process subsequent IEs following the Skip IE. There are two modes of operation. At the beginning of each DL-MAP, the processing of IEs is always enabled. When a Skip IE is encountered, and if Mode is set to 1, the mobility enabled MS may skip the processing of all subsequent IEs in the DL-MAP. However, when a Skip IE with Mode set to 0 is encountered, the mobility enabled MS may disable the processing of subsequent IEs until the next Skip IE is encountered in the DL-MAP. When the next Skip IE with Mode set to 0 is encountered, the MS shall enable the processing of subsequent IEs. This process continues until the end of the DL-MAP. (See Table 349.)

Table 349—Skip IE format

Syntax	Size (bit)	Notes
Skip_IE() {	—	—
Extended-2 DIUC	4	Skip IE = 0x6
Length	8	Length = 0x1
Mode	1	If set to 1, the MS can skip the processing of all subsequent IEs in the DL-MAP. If set to 0, the MS toggle the enabling and disabling of processing of IEs following the Skip IE, until the next Skip IE is encountered.

Table 349—Skip IE format *(continued)*

Syntax	Size (bit)	Notes
Reserved	7	—
}	—	—

8.4.5.3.21 HARQ DL MAP IE

The following modes of HARQ shall be supported by the HARQ DL MAP IE:

a) Chase combining HARQ for all FEC types (HARQ Chase). In this mode, the burst profile is indicated by a DIUC.
b) Incremental redundancy HARQ with CTC (HARQ IR). In this mode, the burst profile is indicated by the parameters N_{EP}, N_{SCH}.
c) Incremental redundancy HARQ for convolutional code (HARQ CC-IR).

The IE may also be used to indicate a non-HARQ transmission when ACK disable = 1.

The HARQ DL MAP IE defines one or more two-dimensional data regions (a number of symbols by a number of subchannels). These allocations are further partitioned into bursts, termed subbursts, by allocating a specified number of slots to each burst. All subbursts of a data region shall only support one of the HARQ modes. The number of slots is indicated by duration or N_{SCH} fields. The slots are allocated in a frequency-first order, starting from the slot with the smallest symbol number and smallest subchannel, and continuing to slots with increasing subchannel number. When the edge of the allocation is reached, the symbol number is increased by a slot duration, as depicted in Figure 238. Each subburst is separately encoded.

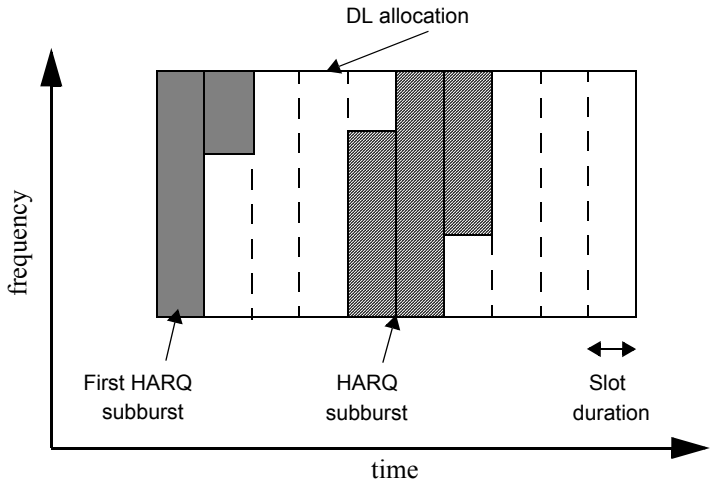

Figure 238—HARQ DL allocation

The enhanced feedback 6-bit channel type or mandatory feedback channel type shall be used for CQI channels allocated through any of the DL HARQ subburst IEs.

Each HARQ Map IE and subburst IE shall be nibble-aligned. When there is an if-else clause, regardless of whether the if clause or the else clause is executed, the resulting Map IE shall be nibble-aligned. When there

is a loop, nibble-alignment shall be required before the loop starts and inside the loop. (See Table 350 and Table 351.)

Table 350—HARQ DL MAP IE format

Syntax	Size (bit)	Notes
HARQ_DL_MAP_IE() {	—	—
Extended-2 DIUC	4	HARQ_DL_MAP_IE() = 0x7
Length	8	Length in bytes
RCID_Type	2	0b00: Normal CID 0b01: RCID11 0b10: RCID7 0b11: RCID3
ACK region index	1	The index of the ACK region associated with all subbursts defined in this HARQ DL map IE (FDD/H-FDD only). 0: first ACK region 1: second ACK region This bit shall be set to 0 for TDD mode.
Reserved	1	—
While (data remains) {	—	—
Boosting	3	0b000: Normal (not boosted) 0b001: +6dB 0b010: –6dB 0b011: +9dB 0b100: +3dB 0b101: –3dB 0b110: –9dB 0b111: –12dB;
Region_ID use indicator	1 bit	0: not use Region_ID 1: use Region_ID
If (Region_ID use indicator == 0) {		
OFDMA symbol offset	8	Offset from the start symbol of DL subframe
Subchannel offset	7	—
Number of OFDMA symbols	7	—
Number of subchannels	7	—
Rectangular subburst Indication	1	Indicates subburst allocations are time-first rectangular. The duration field in each subburst IE specifies the number of subchannels for each rectangular allocation. This is only valid for AMC allocations and all allocations with dedicated pilots. When this field is clear, subbursts shall be allocated in frequency-first manner and the duration field reverts to the default operation.
Reserved	2	—
} else {	—	—

Table 350—HARQ DL MAP IE format *(continued)*

Syntax	Size (bit)	Notes
Region_ID	8	Index to the DL region defined in DL region definition TLV in DCD
}	—	—
Mode	4	Indicates the mode of this HARQ region: 0b0000: Chase HARQ 0b0001: Incremental redundancy HARQ for CTC 0b0010: Incremental redundancy HARQ for Convolutional Code 0b0011: MIMO Chase HARQ 0b0100: MIMO IR HARQ 0b0101: MIMO IR HARQ for Convolutional Code 0b0110: MIMO STC HARQ 0b0111–0b1111: *Reserved*
Subburst IE Length	8	Length, in nibbles, to indicate the size of the subburst IE in this HARQ mode. The MS may skip DL HARQ Subburst IE if it does not support the HARQ mode. However, the MS shall decode N ACK Channel field from each DL HARQ Subburst IE to determine the UL ACK channel it shall use for its DL HARQ burst.
If (Mode == 0b0000) {	—	—
DL_HARQ_Chase_subburst_IE()	*variable*	—
} else if (Mode == 0b0001) {	—	—
DL_HARQ_IR_CTC_subburst_IE()	*variable*	—
} else if (Mode == 0b0010) {	—	—
DL_HARQ_IR_CC_subburst_IE()	*variable*	—
} else if (Mode == 0b0011) {	—	—
MIMO_DL_Chase_HARQ_subburst_IE()	*variable*	—
} else if (Mode == 0b0100) {	—	—
MIMO_DL_IR_HARQ_subburst_IE()	*variable*	—
} else if (Mode == 0b0101) {	—	—
MIMO_DL_IR_HARQ_for_CC_subburst_IE()	*variable*	—
} else if (Mode == 0b0110) {	—	—
MIMO_DL_STC_HARQ_subburst_IE()	*variable*	—
}	—	—
}	—	—

Table 350—HARQ DL MAP IE format *(continued)*

Syntax	Size (bit)	Notes
Padding	*variable*	Padding to byte for the unspecified portion of this IE, i.e., not including the first two fields, "Extended-2 DIUC" and "Length"; shall be set to 0
}	—	—

Table 351—DL HARQ Chase Subburst IE format

Syntax	Size (bit)	Notes
DL_HARQ_Chase_subburst_IE() {	—	—
N subburst	4	Number of subbursts in the 2D rectangular region is this field value plus 1
N ACK channel	4	Number of HARQ ACK enabled subbursts in the 2D region
For (j = 0; j < Number of subbursts; j++){	—	—
RCID_IE()	*variable*	—
Duration	10	Duration in slots
subburst DIUC Indicator	1	If subburst DIUC Indicator is 1, it indicates that DIUC is explicitly assigned for this subburst. Otherwise, this subburst shall use the same DIUC as the previous subburst If j is 0 then this indicator shall be 1
Group Indicator	1	TDD mode: *Reserved*, set to 0. Used for FDD/H-FDD case only; to indicate the group assignment of the MS (see 8.4.4.2 and 8.4.4.2.1) 0b0: Group #1 0b1: Group #2
If(subburst DIUC Indicator == 1){	—	—
DIUC	4	—
Repetition Coding Indication	2	0b00: No repetition coding 0b01: Repetition coding of 2 used 0b10: Repetition coding of 4 used 0b11: Repetition coding of 6 used
Reserved	2	Shall be set to zero
}	—	—
ACID	4	—
AI_SN	1	—

Table 351—DL HARQ Chase Subburst IE format *(continued)*

Syntax	Size (bit)	Notes
ACK disable	1	When ACK Disable == 1, the allocated subburst does not require an ACK to be transmitted by the SS in the ACKCH Region (see 8.4.5.4.23). In this case, no ACK channel is allocated for the subburst in the ACKCH Region. For TDD SS, for the burst, BS shall not perform HARQ retransmission and MS shall ignore ACID, AI_SN and SPID, which shall be set to 0 by BS if they exist. For FDD SS, for the burst, BS shall not perform HARQ retransmission and MS shall ignore AI_SN and SPID, which shall be set to 0 by BS if they exist. For FDD SS, the BS may set the ACID to a value other than 0 if that ACID is listed in the Aggregated HARQ Channels TLV. The CRC shall be appended at the end of each subburst regardless of the ACK disable bit.
Dedicated DL Control Indicator	2	LSB #0 indicates inclusion of CQI control LSB #1 indicates inclusion of Dedicated DL Control IE.
If(LSB #0 of Dedicated DL Control Indicator == 1){	—	—
Duration (d)	4	A CQI feedback is transmitted on the CQI channels indexed by the (CQI Channel Index) by the SS for $2^{(d-1)}$ frames. If d is 0b0000, deallocates all CQI feedback when the current ACID is completed successfully. If d is 0b1111, the MS should report until the BS command for the MS to stop.
If (Duration != 0b0000){	—	—
Allocation Index	6	Index to the channel in a frame the CQI report should be transmitted by the SS.
Period (p)	3	A CQI feedback is transmitted on the CQI channels indexed by the (CQI Channel Index) by the SS in every 2^p frames.
Frame offset	3	The MS starts reporting at the frame of which the number has the same 3 LSB as the specified frame offset. If the current frame is specified, the MS should start reporting in eight frames.
}	—	—
}	—	—
If (LSB #1 of Dedicated DL Control Indicator ==1) {	—	—
Dedicated DL Control IE ()	*variable*	—
}	—	—
}	—	—
}	—	—

Group Indicator

If the Group Indicator field is not equal to the current H-FDD group index that the MS is associated with, the MS shall switch to the group index indicated by the Group Indicator field. BS can request explicit acknowledgement from MS by setting the LSB #0 of the Dedicated DL Control Indicator to 1 in this IE, in which case MS shall use the assigned CQICH channel indicated in Allocation Index field (see 8.4.4.2.1).

A non-HARQ MS is required to decode DL HARQ Chase Subburst IEs with ACK Disable = 1 if the MS has the capability to decode the extended HARQ IEs. (See Table 352, Table 353, and Table 354.)

Table 352—DL HARQ IR CTC Subburst IE format

Syntax	Size (bit)	Notes
DL_HARQ_IR_CTC_subburst_IE() {	—	—
N subburst	4	"Number of subbursts" in the 2D region is this field value plus 1
N ACK channel	4	Number of HARQ ACK enabled subbursts in the 2D region
For (j = 0; j < Number of subbursts; j++){	—	—
RCID_IE()	*variable*	—
N_{EP}	4	—
N_{SCH}	4	—
SPID	2	—
ACID	4	—
AI_SN	1	—
ACK disable	1	When ACK Disable == 1, the allocated subburst does not require an ACK to be transmitted by the SS in the ACKCH Region (see 8.4.5.4.23). In this case, no ACK channel is allocated for the subburst in the ACKCH Region. For TDD SS, for the burst, BS shall not perform HARQ retransmission and MS shall ignore ACID, AI_SN and SPID, which shall be set to 0 by BS if they exist. For FDD SS, for the burst, BS shall not perform HARQ retransmission and MS shall ignore AI_SN and SPID, which shall be set to 0 by BS if they exist. For FDD SS, the BS may set the ACID to a value other than 0 if that ACID is listed in the Aggregated HARQ Channels TLV. The CRC shall be appended at the end of each subburst regardless of the ACK disable bit.
Reserved	1	Shall be set to zero
Group Indicator	1	TDD mode: *Reserved*, set to 0. Used for FDD/H-FDD case only; to indicate the group assignment of the MS (see 8.4.4.2 and 8.4.4.2.1) 0b0: Group #1 0b1: Group #2

Table 352—DL HARQ IR CTC Subburst IE format *(continued)*

Syntax	Size (bit)	Notes
Dedicated DL Control Indicator	2	LSB #0 indicates inclusion of CQI control LSB #1 indicates inclusion of Dedicated DL Control IE
If(LSB #0 of Dedicated DL Control Indicator == 1){	—	—
Duration (*d*)	4	A CQI feedback is transmitted on the CQI channels indexed by the (CQI Channel Index) by the SS for $2^{(d-1)}$ frames. If d is 0b0000, deallocates all CQI feedback when the current ACID is completed successfully. If *d* is 0b1111, the MS should report until the BS command for the MS to stop
If (Duration != 0b0000){	—	—
Allocation index	6	Index to the channel in a frame the CQI report should be transmitted by the SS
Period(p)	3	A CQI feedback is transmitted on the CQI channels indexed by the (CQI Channel Index) by the SS in every 2^p frames.
Frame offset	3	The MS starts reporting at the frame of which the number has the same 3 LSB as the specified frame offset. If the current frame is specified, the MS should start reporting in eight frames.
}	—	—
}	—	—
If (LSB #1 of Dedicated DL Control Indicator ==1) {	—	—
Dedicated DL Control IE ()	*variable*	—
}	—	—
}	—	—
}	—	—

Group Indicator

If the Group Indicator field is not equal to the current H-FDD group index that the MS is associated with, the MS shall switch to the group index indicated by the Group Indicator field. BS can request explicit acknowledgement from MS by setting the LSB #0 of the Dedicated DL Control Indicator to 1 in this IE, in which case MS shall use the assigned CQICH channel indicated in Allocation Index field (see 8.4.4.2.1).

Table 353—DL HARQ IR CC Subburst IE format

Syntax	Size (bit)	Notes
DL_HARQ_IR_CC_subburst_IE() {	—	—
N subburst	4	"Number of subbursts" in the 2D region is this field value plus 1
N ACK channel	4	Number of HARQ ACK enabled subbursts in the 2D region
For (*j* = 0; *j* < Number of subbursts; *j*++) {	—	—
RCID_IE()	*variable*	—
Duration	10	—
subburst DIUC Indicator	1	If subburst DIUC Indicator is 1, it indicates that DIUC is explicitly assigned for this subburst. Otherwise, this subburst shall use the same DIUC as the previous subburst. If *j* is 0 then this indicator shall be 1.
Group Indicator	1	TDD mode: *Reserved*, set to 0. Used for FDD/H-FDD case only; to indicate the group assignment of the MS (see 8.4.4.2 and 8.4.4.2.1) 0b0: Group #1 0b1: Group #2
If(subburst DIUC Indicator == 1){	—	—
DIUC	4	—
Repetition Coding Indication	2	0b00: No repetition coding 0b01: Repetition coding of 2 used 0b10: Repetition coding of 4 used 0b11: Repetition coding of 6 used
Reserved	2	—
}	—	—
ACID	4	—
AI_SN	1	—
SPID	2	—

Table 353—DL HARQ IR CC Subburst IE format *(continued)*

Syntax	Size (bit)	Notes
ACK disable	1	When ACK Disable == 1, the allocated subburst does not require an ACK to be transmitted by the SS in the ACKCH Region (see 8.4.5.4.23). In this case, no ACK channel is allocated for the subburst in the ACKCH Region. For TDD SS, for the burst, BS shall not perform HARQ retransmission and MS shall ignore ACID, AI_SN and SPID, which shall be set to 0 by BS if they exist. For FDD SS, for the burst, BS shall not perform HARQ retransmission and MS shall ignore AI_SN and SPID, which shall be set to 0 by BS if they exist. For FDD SS, the BS may set the ACID to a value other than 0 if that ACID is listed in the Aggregated HARQ Channels TLV. The CRC shall be appended at the end of each subburst regardless of the ACK disable bit.
Dedicated DL Control Indicator	2	LSB #0 indicates inclusion of CQI control LSB #1 indicates inclusion of Dedicated DL Control IE
Reserved	2	Shall be set to zero.
If (LSB #0 of Dedicated DL Control Indicator == 1) {	—	—
Duration (d)	4	A CQI feedback is transmitted on the CQI channels indexed by the (CQI Channel Index) by the SS for $2^{(d-1)}$ frames. If d is 0b0000, deallocates all CQI feedback when the current ACID is completed successfully. If d is 0b1111, the MS should report until the BS command for the MS to stop
If (Duration != 0b0000){	—	—
Allocation index	6	Index to the channel in a frame the CQI report should be transmitted by the SS
Period(p)	3	A CQI feedback is transmitted on the CQI channels indexed by the (CQI Channel Index) by the SS in every 2^p frames.
Frame offset	3	The MS starts reporting at the frame of which the number has the same 3 LSB as the specified frame offset. If the current frame is specified, the MS should start reporting in eight frames.
}	—	—
}	—	—
If ((LSB #1 of Dedicated DL Control Indicator == 1) {	—	—
Dedicated DL Control IE ()	*variable*	—
}	—	—

Table 353—DL HARQ IR CC Subburst IE format *(continued)*

Syntax	Size (bit)	Notes
}	—	—
}	—	—

Group Indicator

If the Group Indicator field is not equal to the current H-FDD group index that the MS is associated with, the MS shall switch to the group index indicated by the Group Indicator field. BS can request explicit acknowledgement from MS by setting the LSB #0 of the Dedicated DL Control Indicator to 1 in this IE, in which case MS shall use the assigned CQICH channel indicated in Allocation Index field (see 8.4.4.2.1).

Table 354—MIMO DL Chase HARQ Subburst IE format

Syntax	Size (bit)	Notes
MIMO_DL_Chase_HARQ_subburst_IE() {	—	—
N subburst	4	"Number of subbursts" in the 2D region is this field value plus 1
N ACK channel	6	Number of HARQ ACK enabled subbursts in the 2D region
For (j = 0; j < Number of subbursts; j++){	—	—
MU Indicator	1	Indicates whether this DL burst is intended for multiple SS
Dedicated MIMO DL Control Indicator	1	—
ACK Disable	1	When ACK Disable == 1, the allocated subburst does not require an ACK to be transmitted by the SS in the ACKCH Region (see 8.4.5.4.23). In this case, no ACK channel is allocated for the subburst in the ACKCH Region. For TDD SS, for the burst, BS shall not perform HARQ retransmission and MS shall ignore ACID, AI_SN and SPID, which shall be set to 0 by BS if they exist. For FDD SS, for the burst, BS shall not perform HARQ retransmission and MS shall ignore AI_SN and SPID, which shall be set to 0 by BS if they exist. For FDD SS, the BS may set the ACID to a value other than 0 if that ACID is listed in the Aggregated HARQ Channels TLV. The CRC shall be appended at the end of each subburst regardless of the ACK disable bit.
If (MU indicator == 0) {	—	—
RCID IE()	*variable*	—
}	—	—
If (Dedicated MIMO DL Control Indicator == 1) {	—	—

Table 354—MIMO DL Chase HARQ Subburst IE format *(continued)*

Syntax	Size (bit)	Notes
Dedicated MIMO DL Control IE ()	*variable*	—
}	—	—
Duration	10	—
For (*i* = 0; *i* < N_layer; *i*++) {	—	—
if (MU indicator == 1) {	—	—
RCID IE()	*variable*	—
}	—	—
DIUC	4	—
Repetition Coding Indication	2	0b00 – No repetition coding 0b01 – Repetition coding of 2 used 0b10 – Repetition coding of 4 used 0b11 – Repetition coding of 6 used
If (ACK Disable == 0) {	—	—
ACID	4	—
AI_SN	1	—
}	—	—
}	—	—
}	—	—
Padding	*variable*	Padding to nibble; shall be set to 0
}	—	—

When an MS encounters a MIMO HARQ burst allocation with Dedicated MIMO DL Control Indicator set to 1 in the current subburst IE, the information in Dedicated MIMO DL Control IE shall override the information 1) in STC DL zone IE (e.g., matrix type indication) for the current DL zone, and 2) in the previous Dedicated MIMO DL Control IE in the same subburst IE. In addition, this information is used for all following subburst allocations with Dedicated MIMO DL Control Indicator = 0 until the next occurrence of the Dedicated MIMO DL control IE in the same subburst IE.

For MIMO HARQ allocation specified in the MIMO DL Chase HARQ Subburst IE, MIMO DL IR HARQ Subburst IE, or the MIMO DL IR HARQ for CC Subburst IE, each layer shall be allocated its associated ACK channel. The number of ACK channels associated with the subburst IE may be greater than N_sub_burst.

For each multi-SS subburst (MU Indicator = 1), if the dedicated pilot bit is set to 1 in the STC Zone IE (8.4.5.3.4) for the zone in which the subburst allocations are being made, N_layer for this subburst selects the pilot format for the subburst by interpreting N_layer as the number of Tx antennas (as defined in 8.4.8), and the SS with the first RCID shall be assigned the pilot pattern corresponding to antenna 1, of 8.4.8, the second to the pilot pattern corresponding to antenna 2, and so on. (See Table 355, Table 356, and Table 357.)

Table 355—MIMO DL IR HARQ Subburst IE format

Syntax	Size (bit)	Notes
MIMO_DL_IR_HARQ_subburst_IE() {	—	—
N subburst	4	"Number of subbursts" in the 2D region is this field value plus 1
N ACK channel	6	Number of HARQ ACK enabled subbursts in the 2D region
For (*j* = 0; *j* < Number of subbursts; *j*++){	—	—
MU Indicator	1	Indicates whether this DL burst is intended for multiple SS
Dedicated MIMO DL Control Indicator	1	—
ACK Disable	1	When ACK Disable == 1, the allocated subburst does not require an ACK to be transmitted by the SS in the ACKCH Region (see 8.4.5.4.23). In this case, no ACK channel is allocated for the subburst in the ACKCH Region. For TDD SS, for the burst, BS shall not perform HARQ retransmission and MS shall ignore ACID, AI_SN and SPID, which shall be set to 0 by BS if they exist. For FDD SS, for the burst, BS shall not perform HARQ retransmission and MS shall ignore AI_SN and SPID, which shall be set to 0 by BS if they exist. For FDD SS, the BS may set the ACID to a value other than 0 if that ACID is listed in the Aggregated HARQ Channels TLV. The CRC shall be appended at the end of each subburst regardless of the ACK disable bit.
If (MU indicator == 0) {	—	—
RCID IE()	*variable*	—
}	—	—
If (Dedicated MIMO DL Control Indicator == 1) {	—	—
Dedicated MIMO DL Control IE ()	*variable*	—
}	—	—
$\mathbf{N_{SCH}}$	4	In the case of vertical encoding, this value shall be half of an even numbered value based on 8.4.9.2.3.5.6
For (*i* = 0; *i* < N_layer; *i*++) {	—	—
if (MU indicator == 1) {	—	—
RCID IE()	*variable*	—
}	—	—
$\mathbf{N_{EP}}$	4	—
If (ACK Disable == 0) {	—	—

Table 355—MIMO DL IR HARQ Subburst IE format *(continued)*

Syntax	Size (bit)	Notes
SPID	2	—
ACID	4	—
AI_SN	1	—
}	—	—
}	—	—
}	—	—
Padding	*variable*	Padding to nibble; shall be set to 0
}	—	—

Table 356—MIMO DL IR HARQ for CC Subburst IE format

Syntax	Size (bit)	Notes
MIMO_DL_IR_HARQ_for_CC_subburst_IE() {	—	—
N subburst	4	"Number of subbursts" in the 2D region is this field value plus 1
N ACK channel	6	Number of HARQ ACK enabled subbursts in the 2D region
For (j = 0; j < Number of subbursts; j++){	—	—
MU Indicator	1	Indicates whether this DL burst is intended for multiple SS
Dedicated MIMO DL Control Indicator	1	—

Table 356—MIMO DL IR HARQ for CC Subburst IE format *(continued)*

Syntax	Size (bit)	Notes
ACK Disable	1	When ACK Disable == 1, the allocated subburst does not require an ACK to be transmitted by the SS in the ACKCH Region (see 8.4.5.4.23). In this case, no ACK channel is allocated for the subburst in the ACKCH Region. For TDD SS, for the burst, BS shall not perform HARQ retransmission and MS shall ignore ACID, AI_SN and SPID, which shall be set to 0 by BS if they exist. For FDD SS, for the burst, BS shall not perform HARQ retransmission and MS shall ignore AI_SN and SPID, which shall be set to 0 by BS if they exist. For FDD SS, the BS may set the ACID to a value other than 0 if that ACID is listed in the Aggregated HARQ Channels TLV. The CRC shall be appended at the end of each subburst regardless of the ACK disable bit.
If (MU indicator == 0) {	—	—
RCID IE()	*variable*	—
}	—	—
If (Dedicated MIMO DL Control Indicator == 1) {	—	—
Dedicated MIMO DL Control IE ()	*variable*	—
}	—	—
Duration	10	—
For (*i* = 0; *i* < N_layer; *i*++) {	—	—
if (MU indicator == 1) {	—	—
RCID IE()	*variable*	—
}	—	—
DIUC	4	—
Repetition Coding Indication	2	0b00: No repetition coding 0b01: Repetition coding of 2 used 0b10: Repetition coding of 4 used 0b11: Repetition coding of 6 used
If (ACK Disable == 0) {	—	—
ACID	4	—
AI_SN	1	—
SPID	2	—
}	—	—

Table 356—MIMO DL IR HARQ for CC Subburst IE format *(continued)*

Syntax	Size (bit)	Notes
}	—	—
}	—	—
Padding	*variable*	Padding to nibble; shall be set to 0.
}	—	—

Table 357—MIMO DL STC HARQ Subburst IE format

Syntax	Size (bit)	Notes
MIMO_DL_STC_HARQ_subburst_IE() {	—	—
N subburst	4	"Number of subbursts" in the 2D region is this field value plus 1
N ACK channel	6	Number of HARQ ACK enabled sub-bursts in the 2D region
For (j = 0; j < Number of subbursts; j++){	—	—
Tx count	2	0b00: initial transmission 0b01: odd retransmission 0b10: even retransmission 0b11: *Reserved*
Duration	10	—
Subburst offset indication	1	Indicates the inclusion of subburst offset
Reserved	3	—
If (Subburst offset indication == 1) {	—	—
Subburst offset	8	Offset in slots with respect to the previous subburst defined in this data region. If this is the first subburst within the data region, this offset is with respect to slot 0 of the data region.
}	—	—
RCID IE()	*variable*	—

Table 357—MIMO DL STC HARQ Subburst IE format *(continued)*

Syntax	Size (bit)	Notes
ACK Disable	1	When ACK Disable == 1, the allocated subburst does not require an ACK to be transmitted by the SS in the ACKCH Region (see 8.4.5.4.23). In this case, no ACK channel is allocated for the subburst in the ACKCH Region. For TDD SS, for the burst, BS shall not perform HARQ retransmission and MS shall ignore ACID, AI_SN and SPID, which shall be set to 0 by BS if they exist. For FDD SS, for the burst, BS shall not perform HARQ retransmission and MS shall ignore AI_SN and SPID, which shall be set to 0 by BS if they exist. For FDD SS, the BS may set the ACID to a value other than 0 if that ACID is listed in the Aggregated HARQ Channels TLV. The CRC shall be appended at the end of each subburst regardless of the ACK disable bit.
if (Tx count == 00) {	—	—
Dedicated MIMO DL Control Indicator	1	—
If (Dedicated MIMO DL Control Indicator == 1) {	—	—
Dedicated MIMO DL Control IE ()	*variable*	—
}	—	—
DIUC	4	—
Repetition Coding Indication	2	0b00: No repetition coding 0b01: Repetition coding of 2 used 0b10: Repetition coding of 4 used 0b11: Repetition coding of 6 used
}	—	—
If (ACK Disable == 0) {	—	—
ACID	4	—
}	—	—
}	—	—
Padding	*variable*	Padding to nibble; shall be set to 0
}	—	—

When the Rectangular subburst Indication field is set, this indicates that all subburst allocations are time-first rectangular allocations that are “Duration” number of subchannels x “Number of Symbols.” When this indicator is set, the “Duration” field specified in the subburst IE indicates the number of sub-channels for each rectangular allocation. The time duration of all rectangular allocations is always “Number of Symbols” defined in the HARQ_DL_MAP_IE(). Each subburst is separately encoded. This rectangular indicator bit is only valid for AMC allocations and all allocations with dedicated pilots. When this field is clear, subbursts shall be allocated in frequency-first manner and the duration field reverts to the default operation.

This IE is used to support the STC subpacket retransmission.

8.4.5.3.21.1 Dedicated MIMO DL Control IE format

Dedicated DL Control IE for MIMO contains additional control information for each subburst. Because each subburst may have its own control information format dependent on the MS capability, the length of the Dedicated DL Control IE for MIMO is variable. (See Table 358.)

Table 358—Dedicated MIMO DL Control IE format

Syntax	Size (bit)	Notes
Dedicated_MIMO_DL_Control_IE() {	—	—
Length	5	Length of control information in Nibbles, including this field
Control header	3	Bit 0: MIMO Control Info Bit 1: CQI Control Info Bit 2: Closed MIMO Control Info
N_layer	2	Number of coding/modulation layers 0b00 = 1 layer 0b01 = 2 layers 0b10 = 3 layers 0b11 = 4 layers
if(MIMO Control Info == 1){	—	—
Matrix	2	Indicates transmission matrix (See 8.4.8) 0b00 = Matrix A 0b01 = Matrix B 0b10 = Matrix C 0b11 = Codebook
if (Dedicated Pilots == 1) {	—	Dedicated Pilots field in STC_Zone_IE()
Num_Streams	2	Indicates the number of beamformed streams which is equal to the number of pilot patterns 0b00 = 1 stream 0b01 = 2 streams 0b10 = 3 streams 0b11 = 4 streams
}	—	—
}	—	—
If(CQICH Control Info == 1){	—	—
Period	3	Period (in frame) = 2 period
Frame offset	3	—
Duration	4	A CQI feedback is transmitted on the CQI channels indexed by the Allocation index for 10×2^d frames
For (j = 0; N_layer + 1; j++) {	—	—
Allocation index[1]	6	Index to CQICH assigned to this layer
}	—	—

Table 358—Dedicated MIMO DL Control IE format *(continued)*

Syntax	Size (bit)	Notes
CQICH_Num	2	Number of additional CQICHs assigned to this SS (0–3)
for (*i* = 0; *i* < CQICH_Num; *i*++) {	—	—
Feedback type	3	Type of feedback on this CQICH
Allocation index	6	—
}	—	—
}	—	—
if (Closed MIMO Control Info == 1){	—	—
if (MIMO Control Info == 1) {	—	—
MIMO mode = Matrix	—	
} Else {	—	—
MIMO mode = Matrix in STC_Zone_IE()	—	
}	—	—
If (MIMO mode == 00 or 01) {	—	—

Antenna Grouping Index	3	Indicates the index of antenna grouping. See 8.4.8.3.4 and 8.4.8.3.5
		If((Matrix_indicator == 00)
		000~010 = 0b101110~0b110000 in Table 522
		else
		000~101 = 0b110001~0b110110 in Table 522

} elseif (MIMO mode == 10) {	—	—
Num_stream	2	Indicates the number of streams in Table 474 for 3 Tx and Table 475 for 4 Tx
Antenna Selection Index	3	Indicates the index of antenna selection. See 8.4.8.3.4 and 8.4.8.3.5 000~110 = 0b110000~0b110101 in Table 523
} elseif (MIMO mode == 11) {	—	—
Num_stream	2	Indicates number of streams
Codebook Precoding Index	6	Indicates the index of precoding matrix W in the codebook (see 8.4.8.3.6)
}	—	—
}	—	—
Padding	*variable*	Padding to Nibble; shall be set to 0
}	—	—

Control header

Four bits are used to indicate the following control information. If the first bit is set to 1, this means that MIMO Control information follows. If the second bit is set to 1, this IE shall contain CQI control information. Other bits are reserved for future extension. CQICH Control Info=1 shall be used only if MU indicator (as defined in Table 356)equals zero.

N_layer

Specifies the number of layers contained in this burst. The layer is defined as a separate coding/ modulation path.

Matrix Indicator

This field indicates MIMO matrix for the burst. For all single stream allocations with dedicated pilots (Dedicated Pilots = 1 and Num_Streams = 1), Matrix indicator field shall be set to 0b11.

Period

Informs the SS of the period of CQI reports. A CQI feedback is transmitted on the CQICH every 2^p frames.

Frame Offset

Informs the SS when to start transmitting reports. The SS starts reporting at the frame number which has the same 3 LSBs as the specified Frame Offset. If the current frame is specified, the SS shall start reporting in eight frames.

Duration

Indicates when the SS should stop reporting unless the CQICH allocation is refreshed beforehand. If Duration is set to 0b0000, the BS shall deallocate the CQICH. If Duration is set to 0b1111, the CQICH is allocated indefinitely and the SS should report until it receives another MAP IE with Duration set to 0b0000.

Allocation Index[1]

Indicates position from the start of the CQICH region.

Feedback Type

Indicates the type of feedback content on the allocated CQICH from SS. Its mapping shall be

0b000 = Fast DL measurement/Default Feedback with antenna grouping
0b001 = Fast DL measurement/Default Feedback with antenna selection
0b010 = Fast DL measurement/Default Feedback with reduced codebook
0b011 = Quantized precoding weight feedback
0b100 = Index to precoding matrix in codebook
0b101 = Channel Matrix Information
0b110–0b111 = *Reserved*

8.4.5.3.22 DL HARQ ACK IE

The DL HARQ ACK IE is used by BS to send HARQ acknowledgment to UL HARQ-enabled traffic. The bit position in the bitmap is determined by the order of the HARQ-enabled UL bursts in the UL-MAP. The frame offset *j* between the UL burst and the HARQ ACK-BITMAP is specified by "HARQ_ACK_Delay_for UL Burst" field in the DCD message. For example, when an MS transmits a HARQ-enabled burst at frame i and the burst is the *n*-th HARQ-enabled burst in the MAP, the MS should receive HARQ ACK at *n*-th bit of the BITMAP which is sent by the BS at frame (i+j).

The existence of this IE shall be optional.

If the HARQ ACK BITMAP is omitted, the HARQ MS should retain the transmitted HARQ burst and retransmit it when the BS request retransmission with AI_SN. This IE may only exist in the DL-MAP message or the compressed DL-MAP message. (See Table 359.)

Table 359—HARQ _ACK IE format

Syntax	Size (bit)	Notes
HARQ_ACK_IE() {	—	—
Extended-2 DIUC	4	HARQ_ACK_IE() = 0x8
Length	8	Length in bytes
Bitmap	*variable*	Bitmap size is determined by Length field
}	—	—

Bitmap

Includes HARQ ACK information for HARQ-enabled UL bursts. The size of the BITMAP shall be equal or larger than the number of HARQ-enabled UL bursts. Each byte carriers 8 ACK indications ordered from LSB (smallest index ACK channel) to MSB. An acknowledgement bit shall be 0 (ACK) if the corresponding UL packet has been successfully received; otherwise, it shall be 1 (NAK).

8.4.5.3.23 Enhanced DL MAP IE

The Enhanced DL Map IE may be used for BS to indicate to the MS the DL resource allocation based on the channel definition specified in the DL channel definition TLV in the DCD. (See Table 360.)

Table 360—Enhanced DL MAP IE format

Syntax	Size (bit)	Notes
Enhanced_DL_MAP_IE() {	—	—
Extended-2 DIUC	4	Enhanced_DL_MAP_IE() = 0x9
Length	8	Length in bytes
Num_Assignment	4	Number of assignments in this IE
For (i = 0; i < Num_Assignment; i++) {	—	—
if (INC_CID == 1) {	—	The DL-MAP starts with INC_CID = 0. INC_CID is toggled between 0 and 1 by the CID_SWITCH_IE() (8.4.5.3.7)
N_CID	8	Number of CIDs
For (n = 0; n < N_CID; n++) {	—	—
CID	16	—
}	—	—
}	—	—
DIUC	4	—

Table 360—Enhanced DL MAP IE format *(continued)*

Syntax	Size (bit)	Notes
Boosting	3	Refer to Table 321
Repetition Coding Indication	2	—
Region_ID	8	Index to the DL region defined in DL channel definition TLV in DCD
Reserved	3	Shall be set to zero
}	—	—
Padding	*variable*	Shall be set to zero. The size shall be 4 bits for even-numbered Num Assignments and 0 bits for odd-numbered Num Assignments.
}	—	—

Num_Assignment
Number of assignments in this IE
Region_ID
Index to the DL region defined in DL channel definition TLV in DCD message

8.4.5.3.24 Closed-loop MIMO DL enhanced IE format

The Closed-loop MIMO DL enhanced IE may be used by BS to assign resource to close loop MIMO enabled MSs. (See Table 361.)

Table 361—Closed-Loop MIMO DL Enhanced IE format

Syntax	Size (bit)	Notes
CL_MIMO_DL_Enhanced_IE() {	—	—
Extended-2 DIUC	4	CL_MIMO_DL_Enhanced_IE() = 0xA
Length	8	Length in bytes
Num_Region	4	—
for (*i* = 0; *i* < Num_Region; *i*++) {	—	—
OFDMA Symbol offset	8	—
Subchannel offset	6	—
Boosting	3	Refer to Table 321
No. OFDMA Symbols	7	—
No. subchannels	6	—

Table 361—Closed-Loop MIMO DL Enhanced IE format *(continued)*

Syntax	Size (bit)	Notes
Matrix_indicator	2	Indicates transmission matrix (see 8.4.8) 0b00 = Matrix A (Transmission diversity) 0b01 = Matrix B (Hybrid Scheme) 0b10 = Matrix C (Spatial Multiplexing) 0b11 = Codebook
if (Matrix_indicator != 0b10) {	—	—
RCID_IE	*variable*	—
DIUC	4	—
Repetition_Coding_indication	2	—
If (Matrix indicator == 0b00 or 0b01)	—	—

Antenna Grouping Index	3	Indicating the index of the antenna grouping index
		If ((Matrix_indicator == 0b00)
		0b000~0b010 = 0b101110~0b110000 in Table 522
		else
		0b000~0b101 = 0b110001~0b110110 in Table 522

Reserved	3	Shall be set to zero.
Elseif (Matrix_indicator == 0b11) {	—	—
Num stream	2	Indicates number of streams
Codebook Precoding Index	6	Indicate the index of the precoding matrix in the codebook
Reserved	2	Shall be set to zero
}Else {	—	—
Num_MS	2	Number of MSs who are assigned DL resource when antenna selection is used
Reserved	2	Shall be set to zero
for (i = 0; i < Num_MS; i++) {	—	—
RCID_IE	*variable*	—
DIUC	4	—
Repetition_Coding_indication	2	—
Num_stream	2	Indicates the number of streams in Table 474 for 3 Tx antenna and Table 475 for 4 Tx antenna
Antenna Selection index	3	Indicates the index of antenna selection See 8.4.8.3.4 and 8.4.8.3.5 0b000~0b010 = 0b110000~0b110010 in Table 474 0b000~0b101 = 0b110000~0b110101 in Table 475
Reserved	1	Shall be set to zero
}	—	—

Table 361—Closed-Loop MIMO DL Enhanced IE format *(continued)*

Syntax	Size (bit)	Notes
}	—	—
}	—	—
Padding	*variable*	Padding to byte; shall be set to zero
}	—	—

Num_Region
A field that indicates the number of the regions defined by OFDMA_Symbol_offset, Subchannel_offset, Boosting, No._OFDMA_Symbols and No._subchannels in this IE

Matrix_indicator
The values of these 2 bits indicate the STC matrix (see 8.4.8)

Antenna Grouping Index
A field that indicates the index of the antenna grouping index

Antenna Selection Index
A field that indicates the index of the selected antenna

Codebook Precoding Index
A field that indicates the index of the precoding matrix in the codebook

Num_stream
The value of these 2 bits plus one indicate the number of MIMO transmission streams

Stream_index
A field that specifies the stream index

8.4.5.3.25 Broadcast Control Pointer IE

The structure of this IE is captured in Table 362.

Table 362—Broadcast Control Pointer IE format

Syntax	Size (bit)	Notes
Broadcast_Control_Pointer_IE() {	—	—
Extended DIUC	4	Broadcast_Control_Pointer_IE() = 0xA
Length	4	Length in bytes
DCD_UCD Transmission Frame	7	The most significant bits of the frame number's least 9 significant bits of the next DCD and/or UCD transmission
Skip Broadcast_System_Update	1	—
If (Skip Broadcast_System_Update == 0) {	—	—
Broadcast_System_Update_Type	1	Shows the type of Broadcast_System_Update 0: For MOB_NBR-ADV Update 1: For Emergency Services Message

Table 362—Broadcast Control Pointer IE format *(continued)*

Syntax	Size (bit)	Notes
Broadcast_System_Update_Transmission_Frame	7	The least significant bits of the frame number of the next Broadcast_System_Update transmission
}	—	—
}	—	—

8.4.5.3.26 AAS SDMA DL IE format

The format for AAS SDMA DL IE is captured in Table 363.

Table 363—AAS SDMA DL IE format

Syntax	Size (bit)	Notes
AAS_SDMA_DL_IE(){	—	—
Extended-2 DIUC	4	AAS_SDMA_DL_IE() = 0xE
Length	8	*variable*
RCID_Type	2	0b00 = Normal CID 0b01 = RCID11 0b10 = RCID7 0b11 = RCID3
Num Burst Region	4	—
Reserved	2	Shall be set to zero
For (ii = 1: Num Region) {	—	—
OFDMA symbol offset	8	Starting symbol offset referenced to DL preamble of the DL frame specified by the Frame Offset
If (Zone Permutation is AMC, TUSC1, or TUSC2) {	—	—
Subchannel offset	8	—
No. OFDMA triple symbols	5	Number of OFDMA symbols is given in multiples of 3
No. subchannels	6	—
} Else {	—	—
Subchannel offset	6	—
No. OFDMA symbols	7	—
No. subchannels	6	—
}	—	—
Number of Users	3	SDMA users for the assigned region
Reserved	2	Shall be set to zero
For (jj = 1: Num_Users) {	—	—

Table 363—AAS SDMA DL IE format *(continued)*

Syntax	Size (bit)	Notes
RCID_IE()	*variable*	—
Encoding Mode	2	0b00: No HARQ 0b01: HARQ Chase Combining 0b10: HARQ Incremental Redundancy 0b11: HARQ Conv. Code Incremental Redundancy
CQICH Allocation	1	0: Not included 1: Included
ACKCH Allocation	1	0: Not included 1: Optionally included for HARQ users
Pilot Pattern Modifier	1	0: Not applied 1: Applied Shall be set to 0 if PUSC AAS zone
If (AAS DL Preamble Used) {	—	—
Preamble Modifier Index	4	Preamble Modifier Index
}	—	—
If (Pilot Pattern Modifier) {	—	—
Pilot Pattern	2	See 8.4.6.3.3 (AMC), 8.4.6.1.2.6 (TUSC) 0b00: Pattern #A 0b01: Pattern #B 0b10: Pattern #C 0b11: Pattern #D
Reserved	1	Shall be set to zero
} Else {	—	—
Reserved	3	Shall be set to zero
}	—	—
If (Encoding Mode == 00) {	—	No HARQ
DIUC	4	—
Repetition Coding Indication	2	0b00: No repetition 0b01: Repetition of 2 0b10: Repetition of 4 0b11: Repetition of 6
Reserved	2	Shall be set to zero
}	—	—
If (Encoding Mode == 01) {	—	HARQ Chase Combining
If (ACKCH Allocation) {	—	—
ACK CH Index	5	—
} Else {	—	—
Reserved	1	Shall be set to zero
}	—	—
DIUC	4	—
Repetition Coding Indication	2	0b00: No repetition 0b01: Repetition of 2 0b10: Repetition of 4 0b11: Repetition of 6

Table 363—AAS SDMA DL IE format *(continued)*

Syntax	Size (bit)	Notes
ACID	4	—
AI_SN	1	—
}	—	—
If (Encoding Mode == 10) {	—	HARQ Incremental Redundancy
If (ACKCH Allocation) {	—	—
ACK CH Index	5	See DL Ack channel index in 8.4.5.4.23
} Else {	—	—
Reserved	1	Shall be set to zero
}	—	—
N_{EP}	4	—
N_{SCH}	4	Indicator for the number of first slots used for data encoding in this SDMA allocation region
SPID	2	—
ACID	4	—
AI_SN	1	—
}	—	—
If (Encoding Mode == 11) {	—	HARQ Conv. Code Incremental Redundancy
If (ACKCH Allocation) {	—	—
ACK CH Index	5	See DL Ack channel index in 8.4.5.4.22
Reserved	2	Shall be set to zero
} Else {	—	—
Reserved	3	Shall be set to zero
}	—	—
DIUC	4	—
Repetition Coding Indication	2	0b00: No repetition 0b01: Repetition of 2 0b10: Repetition of 4 0b11: Repetition of 6
SPID	2	—
ACID	4	—
AI_SN	1	—
}	—	—
If (CQICH Allocation Included) {	—	—
Allocation Index	6	Index to the channel in a frame the CQI report should be transmitted by the SS
Period (p)	3	A CQI feedback is transmitted on the CQI channels indexed by the (CQI Channel Index) by the SS in every 2^p frames

Table 363—AAS SDMA DL IE format *(continued)*

Syntax	Size (bit)	Notes
Frame offset	3	The MS starts reporting at the frame of which the number has the same 3 LSB as the specified frame offset. If the current frame is specified, the MS should start reporting in eight frames
Duration (d)	4	A CQI feedback is transmitted on the CQI channels indexed by the (CQI Channel Index) by the SS for $2^{(d-1)}$ frames. If d is 0b0000, the CQICH is deallocated. If d is 0b1111, the MS should report until the BS command for the MS to stop.
}	—	—
}	—	End of User loop
}	—	End of Burst Region Loop
Padding	*variable*	—
}	—	—

In an AAS zone with PUSC permutation, all AAS SDMA DL IEs that define allocations in a given major group shall contain the same value for the Number of Users field. In AAS zone with PUSC, user #*n* uses the pilot pattern as defined for antenna #*n* in 8.4.8.

8.4.5.3.27 PUSC ASCA Allocation IE

In the DL-MAP, a BS may transmit DIUC = 15 with the PUSC_ASCA_Alloc_IE() to indicate that data is transmitted to a PUSC-ASCA supporting MS using the PUSC-ASCA permutation. (See Table 364.)

Table 364—PUSC ASCA Allocation IE format

Syntax	Size (bit)	Notes
PUSC_ASCA_Alloc_IE() {	—	—
Extended DIUC	4	PUSC ASCA allocate IE() = 0xC
Length	4	Length = 0x7
DIUC	4	—
Short Basic CID	12	12 LSBs of the Basic CID
OFDMA Symbol offset	8	—
Subchannel offset	6	—
No. OFDMA Symbols	7	—
No. Subchannels	6	—
Repetition Coding Information	2	0b00 = No repetition coding 0b01 = Repetition coding of 2 used 0b10 = Repetition coding of 4 used 0b11 = Repetition coding of 6 used
Permutation ID	4	—

Table 364—PUSC ASCA Allocation IE format *(continued)*

Syntax	Size (bit)	Notes
Reserved	7	Shall be set to zero
}	—	—

DIUC
DIUC used for the burst.
Short Basic CID
Twelve LSBs of the Basic CID.
OFDMA Symbol offset
The offset of the OFDMA symbol in which the burst starts, measured in OFDMA symbols from beginning of the DL frame in which the DL-MAP is transmitted.
Subchannel offset
The lowest index OFDMA subchannel used for carrying the burst, starting from subchannel 0.
No. OFDMA Symbols
The number of OFDMA symbols that are used (fully or partially) to carry the DL PHY Burst.
No. of subchannels
The number of subchannels with subsequent indexes, used to carry the burst.
Repetition coding Indication
Indicates the repetition code used inside the allocated burst.
Permutation ID
Identifies the PUSC ASCA permutation used to carry the burst.

8.4.5.3.28 H-FDD Group Switch IE

In FDD, for H-FDD MS, H-FDD Group Switch IE, as shown in Table 365, may be used by the BS to signal one or more MS to switch H-FDD groups.

Table 365—H-FDD Group Switch IE Format

Syntax	Size (bit)	Notes
H-FDD_Group_Switch_IE() {	—	—
Extended DIUC	4	H-FDD Group Switch IE() = 0xD
Length	4	—
RCID_Type	2	0b00: Normal CID 0b01: RCID11 0b10: RCID7 0b11: RCID3
While (data remains) {	—	—
RCID_IE()	*variable*	—
Group Indicator	1	Indicates the group assignment of the MS (see 8.4.4.2 for FDD frame structure and group definition) 0b0: Group #1 0b1: Group #2
CQICH Allocation Included	1	0b0: CQICH Allocation not included 0b1: CQICH Allocation included

Table 365—H-FDD Group Switch IE Format *(continued)*

Syntax	Size (bit)	Notes
if (CQICH Allocation Included==1) {	—	—
Allocation Index	6	Index to the channel in a frame the CQI code should be transmitted by the SS
}	—	—
}	—	—
Padding	*variable*	Padding to byte; shall be set to 0
}	—	—

Group Indicator

The MS shall compare the Group Indicator field to its current H-FDD group index and if the values are not identical, the MS shall switch to the group as indicated by the Group Indicator field (see 8.4.4.2.1)

CQICH Allocation Included

If the CQICH Allocation Included field is set to 1, the MS shall respond with an acknowledgement of the group change, using the assigned CQICH channel indexed by the Allocation Index (see 8.4.4.2.1)

8.4.5.3.29 Persistent HARQ DL MAP Allocation IE

Downlink persistent allocations are used by the BS to make downlink time-frequency resource assignments which repeat periodically. The logical time-frequency resource assigned using the Persistent HARQ DL MAP IE repeats at a periodic interval. For downlink persistent allocations, the BS transmits the Persistent HARQ DL MAP IE, with the mode field set to one of the following values:

— 0b0000: Persistent DL Chase HARQ
— 0b0001: Persistent DL Incremental redundancy HARQ for CTC
— 0b0010: Persistent DL Incremental redundancy HARQ for Convolutional Code
— 0b0011: Persistent MIMO DL Chase HARQ
— 0b0100: Persistent MIMO DL IR HARQ
— 0b0101: Persistent MIMO DL IR HARQ for Convolutional Code
— 0b0110: Persistent MIMO DL STC HARQ

The Persistent HARQ DL MAP IE may be used for non persistent allocations by setting the persistent flag in the subburst IE to 0.

Table 366—Persistent HARQ DL MAP allocation IE

Syntax	Size (bit)	Notes
Persistent_HARQ_DL_MAP_IE() {	—	—
Extended-2 DIUC	4	Persistent_HARQ_DL_MAP_IE = 0xD
Length	8	Length in bytes

Table 366—Persistent HARQ DL MAP allocation IE *(continued)*

Syntax	Size (bit)	Notes
RCID_Type	2	0b00: Normal CID 0b01: RCID11 0b10: RCID7 0b11: RCID3
ACK Region Index	1	The index of the ACK region associated with all sub-bursts defined in this Persistent HARQ DL MAP (FDD/H-FDD only)
while (data_remains){	—	—
Region ID use indicator	1	0: Region ID not used 1: Region ID used
Persistent Region ID	5	—
Change Indicator	1	0: No change occurred 1: Change occurred
if (Region ID use indicator == 0){	—	—
OFDMA Symbol offset	8	Offset from the start of DL subframe
Subchannel offset	7	—
Number of OFDMA symbols	7	—
Number of subchannels	7	—
Rectangular subburst indication	1	Indicates subburst allocations are time-first rectangular. The duration field in each subburst IE specifies the number of subchannels for each rectangular allocation. The slot offset field in each subburst IE specifies the subchannel offset from the first subchannel for each rectangular allocation. When this field is clear, sub-bursts shall be allocated in frequency-first manner and the duration field reverts to the default operation
}	—	—
else{	—	—
Region ID	8	Index to the DL region defined in DL region definition TLV in DCD
}	—	—
Power boost per subburst	1	Set to 1 to signal power boost per subburst. This field shall be set to 0 if Rectangular subburst indication is set to 0
if (Power boost per subburst == 0){	—	—
Boosting	3	0b000: Normal (not boosted) 0b001: +6dB 0b010: –6dB 0b011: +9dB 0b100: +3dB 0b101: –3dB 0b110: –9dB 0b111: –12dB Note that if the Persistent flag is set, the boosting value applies to each allocation instance of the persistent allocation

Table 366—Persistent HARQ DL MAP allocation IE *(continued)*

Syntax	Size (bit)	Notes
}	—	—
Mode	4	Indicates the mode in this HARQ region 0b0000: Persistent DL Chase HARQ 0b0001: Persistent DL Incremental redundancy HARQ for CTC 0b0010: Persistent DL Incremental redundancy HARQ for Convolutional Code 0b0011: Persistent MIMO DL Chase HARQ 0b0100: Persistent MIMO DL IR HARQ 0b0101: Persistent MIMO DL IR HARQ for Convolutional Code 0b0110: Persistent MIMO DL STC HARQ 0b0111 to 0b1111: *Reserved*
Subburst IE Length	8	Length, in nibbles, to indicate the size of the subburst IE in this HARQ mode. The MS may skip DL HARQ Subburst IE if it does not support the HARQ mode. However, the MS shall decode NACK Channel field from each DL HARQ Subburst IE to determine the UL ACK channel it shall use for its DL HARQ burst
if(Mode == 0b0000){	—	—
Persistent DL Chase HARQ subburst IE	*variable*	—
} elseif (Mode == 0b0001){	—	—
Persistent DL Incremental redundancy HARQ for CTC subburst IE	*variable*	—
} elseif (Mode == 0b0010){	—	—
Persistent DL Incremental redundancy HARQ for Convolutional Code	*variable*	—
} elseif (Mode == 0b0011){	—	—
Persistent MIMO DL Chase HARQ	*variable*	—
} elseif (Mode == 0b0100){	—	—
Persistent MIMO DL IR HARQ	*variable*	—
} elseif (Mode == 0b0101){	—	—
Persistent MIMO DL IR HARQ for Convolutional Code	*variable*	—
} elseif (Mode == 0b0110){	—	—
Persistent MIMO DL STC HARQ	*variable*	—
}	—	—
}	—	—

Table 366—Persistent HARQ DL MAP allocation IE *(continued)*

Syntax	Size (bit)	Notes
Padding	*variable*	Padding to byte for the unspecified portion of this IE (i.e., not including the first two fields, "Extended-2 DIUC" and "Length"); shall be set to 0.
}	—	—

Persistent Region ID

The identifier of specific Persistent HARQ region. The operation commanded by the IE is applied to subbursts in the region.

Change Indicator

The change indicator can be set to 0 or 1. It is used by MSs to decide if they can resume using their DL persistent allocations. See 6.3.26.4.5 for details.

Table 367—Persistent DL HARQ Chase Subburst IE format

Syntax	Size (bit)	Notes
Persistent_DL_HARQ_Chase_Subburst_IE() {	—	—
N subburst	4	Number of changed subbursts in the 2D rectangular region is this field value plus 1
Resource shifting indicator	1	0 = No Resource Shifting 1 = Resource Shifting
for (*j* = 0; *j* < Number of changed subbursts; *j*++) {	—	—
Allocation Flag	1	1 = allocate 0 = de-allocate
Group Indicator	1	TDD mode: *Reserved*, set to 0. Used for FDD/H-FDD case only; to indicate the group assignment of the MS (see 8.4.4.2 and 8.4.4.2.1) 0b0: Group #1 0b1: Group #2
if(Allocation Flag == 0){	—	—
RCID_IE()	*variable*	—
MAP ACK Channel Index	6	Index to a MAP ACK channel within the Fast Feedback region. When MAP ACK Channel Index = 0b111111, it indicates NO MAP ACK channel is assigned to this de-allocation
if (Resource shifting indicator ==1) {	—	—
Duration	*variable*	Duration in slots. OFDMA Frame duration dependant 7 bits – 2.5 ms frame 8 bits – 5 ms frame 9 bits – 10 ms frame 10 bits – 20 ms frame

Table 367—Persistent DL HARQ Chase Subburst IE format *(continued)*

Syntax	Size (bit)	Notes
Slot Offset	*variable*	Indicates the start of this persistent allocation in OFDMA slots, with respect to the lowest numbered OFDM symbol and the lowest numbered subchannel in the HARQ region. OFDMA Frame duration dependant 7 bits – 2.5 ms frame 8 bits – 5 ms frame 9 bits – 10 ms frame 10 bits – 20 ms frame
Retransmission Flag	1	0: Deallocation command in Relevant Frame 1: Retransmission of deallocation command in Relevant Frame – Allocation Period
}	—	—
}	—	—
if(Allocation Flag == 1){	—	—
RCID_IE()	*variable*	—
Persistent Flag	1	0 = Non-persistent 1 = Persistent
if(Power boost per subburst == 1){	—	—
Boosting	1	0b000: Normal (not boosted) 0b001: +6dB 0b010: –6dB 0b011: +9dB 0b100: +3dB 0b101: –3dB 0b110: –9dB 0b111: –12dB; Note that if the Persistent flag is set, the boosting value applies to each instance of the persistent allocation
}	—	—
Duration Indicator	1	If Duration Indicator is 1, it indicates that Duration is explicitly assigned for this subburst. Otherwise, this subburst shall use the same Duration as the previous subburst. If *j* is 0 then this indicator shall be 1.
if(Duration Indicator == 1){	—	—
Duration	*variable*	Duration in slots. OFDMA Frame duration dependant 7 bits – 2.5 ms frame 8 bits – 5 ms frame 9 bits – 10 ms frame 10 bits – 20 ms frame
}		
Slot Offset	*variable*	7 bits – 2.5 ms frame 8 bits – 5 ms frame 9 bits – 10 ms frame 10 bits – 20 ms frame
if(Persistent Flag == 1){	—	—

Table 367—Persistent DL HARQ Chase Subburst IE format *(continued)*

Syntax	Size (bit)	Notes
Allocation Period and N_ACID Indicator	1	If Allocation Period and N_ACID Indicator is 1, it indicates that allocation information (allocation period, Number of ACID (N_ACID) is explicitly assigned for this subburst. Otherwise, this subburst shall use the same allocation period as the previous subburst. If j is 0 then this indicator shall be 1.
If(Allocation Period and N_ACID Indicator == 1){		
Allocation Period (ap)	5	Period of the persistent allocation is this field value plus 1 (unit is frame)
Number of ACID (N ACID)	3	Number of HARQ channels associated with this persistent assignment is this field value plus 1
}		
MAP NACK Channel Index	6	Index to a shared MAP NACK channel within the Fast Feedback region. When MAP NACK Channel Index = 0b111111, it indicates NO MAP NACK channel is assigned to this allocation
MAP ACK Channel Index	6	Index to a MAP ACK channel within the Fast Feedback region
}	—	—
Subburst DIUC indicator	1	If subburst DIUC Indicator is 1, it indicates that DIUC is explicitly assigned for this subburst. Otherwise, this subburst shall use the same DIUC as the previous subburst. If j is 0 then this indicator shall be 1
if(Subburst DIUC indicator == 1){	—	—
DIUC	4	—
Repetition Coding Indication	2	0b00: No Repetition coding 0b01: Repetition coding of 2 used 0b10: Repetition coding of 4 used 0b11: Repetition coding of 6 used
}	—	—
ACID	4	Initial value of HARQ channel identifier
AI_SN	1	Initial AI_SN for each ACID

Table 367—Persistent DL HARQ Chase Subburst IE format *(continued)*

Syntax	Size (bit)	Notes
ACK disable	1	When ACK Disable == 1, the allocated subburst does not require an ACK to be transmitted by the SS in the ACKCH Region (see 8.4.5.4.23). In this case, no ACK channel is allocated for the subburst in the ACKCH Region. For TDD SS, for the burst, BS shall not perform HARQ retransmission and MS shall ignore ACID, AI_SN and SPID, which shall be set to 0 by BS if they exist. For FDD SS, for the burst, BS shall not perform HARQ retransmission and MS shall ignore AI_SN and SPID, which shall be set to 0 by BS if they exist. For FDD SS, the BS may set the ACID to a value other than 0 if that ACID is listed in the Aggregated HARQ Channels TLV. The CRC shall be appended at the end of each subburst regardless of the ACK disable bit.
if(ACK disable == 0){	—	—
ACK channel	8	Indicates the ACK channel to be used for this sequence of subbursts as defined in 8.4.5.4.23
}	—	—
Dedicated DL control Indicator	2	LSB #0 indicates inclusion of CQI control LSB #1 indicates inclusion of Dedicated DL Control IE.
if(LSB #0 of dedicated DL control indicator == 1){	—	—
Duration (d)	4	A CQI feedback is transmitted on the CQI channels indexed by the (CQI Channel Index) by the SS for 2(d–1) frames. If d is 0b0000, deallocates all CQI feedback when the current ACID is completed successfully. If d is 0b1111, the MS should report until the BS command for the MS to stop.
if(Duration != 0b0000){	—	—
Allocation index	6	Index to the channel in a frame the CQI report should be transmitted by the SS
Period (p)	3	A CQI feedback is transmitted on the CQI channels indexed by the (CQI Channel Index) by the SS in every 2^p frames
Frame offset	3	The MS starts reporting at the frame of which the number has the same 3 LSB as the specified frame offset. If the current frame is specified, the MS should start reporting in eight frames
}	—	—
}	—	—
if(LSB #1 of dedicated DL control indicator == 1){	—	—
Dedicated DL control IE()	*variable*	—
}	—	—
}	—	—

Table 367—Persistent DL HARQ Chase Subburst IE format *(continued)*

Syntax	Size (bit)	Notes
}	—	—
Padding	*variable*	Padding to nibble; shall be set to 0
}	—	—

Allocation Flag

The allocation flag shall be set to 1 if the subburst IE is allocating time-frequency resources and shall be set to 0 if the subburst IE is de-allocating resources.

Resource Shifting Indicator

If the resource shifting indicator is set to '1', the MS shall shift its persistent resource position by the accumulated slots as indicated by de-allocation commands with slot offsets smaller than its own.

Retransmission Flag

The Retransmission Flag shall be set to 0 if the de-allocation occurs in *K*, where *K* is the current frame and shall be set to 1 if the de-allocation occurred in frame *K – allocation period*. The MS, who correctly received the DL-MAP in frame *K – allocation period*, shall ignore the deallocation command with Retransmission Flag equal to 1. The MS, who failed to receive the DL-MAP in frame *K – allocation period*, shall process the deallocation command with Retransmission Flag equal to 1.

The BS is allowed to retransmit de-allocation commands with the retransmission flag not set. This may cause the MS to receive a duplicated de-allocation command. The MS shall ignore a de-allocation command for which it does not have a corresponding persistent resource allocation.

Persistent Flag

The persistent flag shall be set to 1 if the assignment is persistent and shall be set to 0 if the assignment is non-persistent.

Slot Offset

The slot offset shall be set to the first slot in the time-frequency resource assignment with respect to the lowest numbered OFDM symbol and the lowest numbered subchannel in the HARQ region.

Duration Indicator

Duration Indicator flag determines whether or not Duration is specified for a subburst. If this flag is 1, it indicates that Duration is explicitly assigned for a subburst. Otherwise, the subburst has the same Duration as the previous subburst. This flag shall be 1 for the first subburst in a HARQ region.

Duration

Duration specifies the size (# slots) of an allocation/de-allocation in a HARQ region.

Allocation Period and N_ACID Indicator

If Allocation Period and N_ACID Indicator is 1, it indicates that allocation period and Number of ACID (N_ACID) is explicitly assigned for this subburst. Otherwise, this subburst will use the same allocation period and N_ACID as the previous subburst. This flag shall be 1 for the first subburst in a HARQ region.

Allocation Period

The allocation period value shall be set to (*ap*–1) where *ap* is the period of the persistent allocation, in units of frames. For example, as illustrated in Figure 239, if *ap*=0b00011, then the period of the persistent allocation is four frames, and the time-frequency resource assignment is valid in frames N, N + 4, N +8, etc.

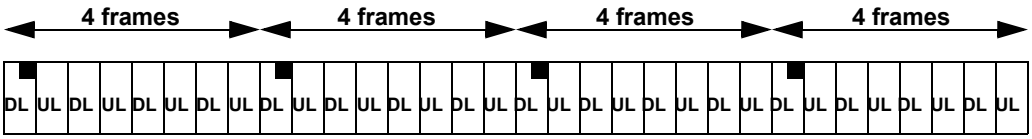

Figure 239—Allocation Period example (ap=0b00011)

N ACID

The values of ACID field (N0) and N_ACID field (N) are used together to specify an implicit cycling of HARQ channel identifiers as follows. N0 is used as the HARQ channel identifier corresponding to the first occurrence of the persistent allocation. For each next allocation this value is incremented modulo (N + 1).

As illustrated in Figure 240, if N_ACID = 0b011 (meaning Num_HARQ_Chan = 4), and if ACID = 2, the HARQ channel identifier follows the pattern 2, 3, 4, 5, 2, 3, 4, 5, etc.

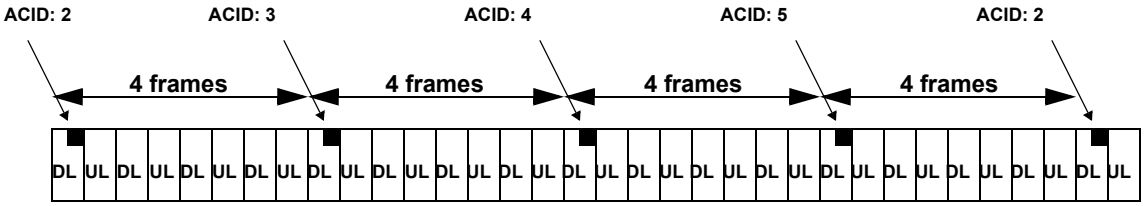

Figure 240—HARQ channel identifier example (N_ACID=0b011)

ACID

The ACID field shall be set to the initial value of HARQ channel identifier as described above.

AI_SN

The AI_SN field value shall be set to the initial ARQ identifier sequence number for each HARQ channel. The AI_SN toggles between 0 and 1 for each particular HARQ channel. For example, if the period equals 4 frames, N_ACID = 0b011, ACID = 2, and AI_SN = 0, the ACID follows the pattern 2, 3, 4, 5, 2, 3, 4, 5, etc, and the AI_SN follows the pattern 0, 0, 0, 0, 1, 1, 1, 1, etc.

ACK channel

The ACK channel field shall be set to the number of the ACK channel within the HARQ ACK Region. The mobile station shall use the indicated ACK channel for transmitting acknowledgment information for each packet received using the time-frequency resource referred to by this persistent allocation.

MAP NACK Channel Index

The MAP NACK channel index is persistently allocated within the Fast Feedback region. The mobile station shall use the indicated MAP NACK channel to report MAP decoding error in frames where it has a persistent resource allocation assigned. When MAP NACK Channel Index = 0b111111, it indicates NO MAP NACK channel is assigned to this allocation.

MAP ACK Channel Index

The MAP ACK channel is allocated non-persistently within the Fast Feedback region. The mobile station shall use the indicated MAP ACK channel to report successful receipt of the persistent allocation IE. If the allocation flag is set to 0, when MAP ACK Channel Index = 0b111111, it indicates NO MAP ACK channel is assigned to this deallocation.

Table 368—Persistent DL HARQ IR CTC Subburst IE format

Syntax	Size (bit)	Notes
Persistent_DL_HARQ_IR_CTC_Subburst_IE() {	—	—
N subburst	4	Number of changed subbursts in the 2D rectangular region is this field value plus 1
Resource shifting indicator	1	0 = No Resource Shifting 1 = Resource Shifting
for (*j* = 0; *j* < Number of changed subbursts; *j*++) {	—	—
Group Indicator	1	TDD mode: *Reserved*, set to 0. Used for FDD/H-FDD case only; to indicate the group assignment of the MS (see 8.4.4.2 and 8.4.4.2.1) 0b0: Group #1 0b1: Group #2
Allocation Flag	1	1 = allocate 0 = de-allocate
if(Allocation Flag == 0){	—	—
RCID_IE()	*variable*	—
MAP ACK Channel Index	6	Index to a MAP ACK channel within the Fast Feedback region. When MAP ACK Channel Index = 0b111111, it indicates NO MAP ACK channel is assigned to this de-allocation.
if (Resource shifting indicator ==1) {	—	—
$\mathbf{N_{EP}}$	4	—
$\mathbf{N_{SCH}}$	4	—
Slot Offset	*variable*	Indicates the start of this persistent allocation in OFDMA slots, with respect to the lowest numbered OFDM symbol and the lowest numbered subchannel in the HARQ region. OFDMA Frame duration dependant 7 bits – 2.5 ms frame 8 bits – 5 ms frame 9 bits – 10 ms frame 10 bits – 20 ms frame
Retransmission Flag	1	0: Deallocation command in Relevant Frame 1: Retransmission of deallocation command in Relevant Frame – Allocation Period
}	—	—
}	—	—
if(Allocation Flag == 1){	—	—
RCID_IE()	*variable*	—
Persistent Flag	1	0 = non-persistent 1 = persistent
if(Power boost per subburst == 1){	—	—

Table 368—Persistent DL HARQ IR CTC Subburst IE format *(continued)*

Syntax	Size (bit)	Notes
Boosting	3	0b000: Normal (not boosted) 0b001: +6 dB 0b010: –6 dB 0b011: +9 dB 0b100: +3 dB 0b101: –3 dB 0b110: –9 dB 0b111: –12 dB Note that if the Persistent flag is set, the boosting value applies to each instance of the persistent allocation.
}	—	—
Duration Indicator	1	If Duration Indicator is 1, it indicates that Duration is explicitly assigned for this subburst. Otherwise, this subburst shall use the same Duration as the previous subburst. If *j* is 0 then this indicator shall be 1.
if(Duration Indicator == 1){	—	—
$\mathbf{N_{EP}}$	4	—
$\mathbf{N_{SCH}}$	4	—
}	—	—
Slot Offset	*variable*	Indicates the start of this persistent allocation in OFDMA slots, with respect to the lowest numbered OFDM symbol and the lowest numbered subchannel in the HARQ region. OFDMA Frame duration dependant 7 bits – 2.5 ms frame 8 bits – 5 ms frame 9 bits – 10 ms frame 10 bits – 20 ms frame
if(Persistent Flag == 1){	—	—
Allocation Period and N_ACID Indicator	1	If Allocation Period and N_ACID Indicator is 1, it indicates that allocation information (allocation period, Number of ACID (N_ACID) is explicitly assigned for this subburst. Otherwise, this subburst shall use the same allocation period as the previous subburst. If *j* is 0 then this indicator shall be 1.
if(Allocation Period and N_ACID Indicator == 1){	—	—
Allocation Period (*ap*)	5	Period of the persistent allocation is this field value plus 1 (unit is frame).
Number of ACID (N ACID)	3	Number of HARQ channels associated with this persistent assignment is this field value plus 1.
}		
MAP NACK Channel Index	6	Index to a shared MAP NACK channel within the Fast Feedback region. When MAP NACK Channel Index = 0b111111, it indicates NO MAP NACK channel is assigned to this allocation.

Table 368—Persistent DL HARQ IR CTC Subburst IE format *(continued)*

Syntax	Size (bit)	Notes
MAP ACK Channel Index	6	Index to a MAP ACK channel within the Fast Feedback region.
}	—	—
SPID	2	—
ACID	4	Initial value of HARQ channel identifier.
AI_SN	1	Initial AI_SN for each ACID.
ACK disable	1	When ACK Disable == 1, the allocated subburst does not require an ACK to be transmitted by the SS in the ACKCH Region (see 8.4.5.4.23). In this case, no ACK channel is allocated for the subburst in the ACKCH Region. For TDD SS, for the burst, BS shall not perform HARQ retransmission and MS shall ignore ACID, AI_SN and SPID, which shall be set to 0 by BS if they exist. For FDD SS, for the burst, BS shall not perform HARQ retransmission and MS shall ignore AI_SN and SPID, which shall be set to 0 by BS if they exist. For FDD SS, the BS may set the ACID to a value other than 0 if that ACID is listed in the Aggregated HARQ Channels TLV. The CRC shall be appended at the end of each subburst regardless of the ACK disable bit.
if(ACK disable == 0){	—	—
ACK channel	8	Indicates the ACK channel to be used for this sequence of subbursts as defined in 8.4.5.4.23.
}	—	—
Dedicated DL control Indicator	2	LSB #0 indicates inclusion of CQI control LSB #1 indicates inclusion of Dedicated DL Control IE.
if(LSB #0 of dedicated DL control indicator == 1){	—	—
Duration (d)	4	A CQI feedback is transmitted on the CQI channels indexed by the (CQI Channel Index) by the SS for 2(d–1) frames. If d is 0b0000, deallocates all CQI feedback when the current ACID is completed successfully. If d is 0b1111, the MS should report until the BS command for the MS to stop.
if(Duration != 0b0000){	—	—
Allocation index	6	Index to the channel in a frame the CQI report should be transmitted by the SS.
Period (p)	3	A CQI feedback is transmitted on the CQI channels indexed by the (CQI Channel Index) by the SS in every 2^p frames.
Frame offset	3	The MS starts reporting at the frame of which the number has the same 3 LSB as the specified frame offset. If the current frame is specified, the MS should start reporting in eight frames.
}	—	—

Table 368—Persistent DL HARQ IR CTC Subburst IE format *(continued)*

Syntax	Size (bit)	Notes
}	—	—
if(LSB #1 of dedicated DL control indicator == 1){	—	—
Dedicated DL control IE()	*variable*	—
}	—	—
}	—	—
}	—	—
Padding	*variable*	Padding to nibble; shall be set to 0.
}	—	—

SPID

Defines subpacket identifier, which is used to identify the four subpackets generated from an encoder packet. The SPID field only applies to FEC modes supporting incremental redundancy. The SPID numbering shall follow the rules for subpacket generation of 6.3.16.1, Subpacket generation.

Table 369—Persistent DL HARQ IR CC Subburst IE format

Syntax	Size (bit)	Notes
Persistent_DL_HARQ_IR_CC_Subburst_IE() {	—	—
N subburst	4	Number of changed subbursts in the 2D rectangular region is this field value plus 1.
Resource shifting indicator	1	0 = No Resource Shifting 1 = Resource Shifting
for (*j* = 0; *j* < Number of changed subbursts; *j*++) {	—	—
Allocation Flag	1	1 = allocate 0 = de-allocate
Group Indicator	1	TDD mode: *Reserved*, set to 0. Used for FDD/H-FDD case only; to indicate the group assignment of the MS (see 8.4.4.2 and 8.4.4.2.1) 0b0: Group #1 0b1: Group #2
if(Allocation Flag == 0){	—	—
RCID_IE()	*variable*	—
MAP ACK Channel Index	6	Index to a MAP ACK channel within the Fast Feedback region. When MAP ACK Channel Index = 0b111111, it indicates NO MAP ACK channel is assigned to this de-allocation.
if (Resource shifting indicator ==1) {	—	—

Table 369—Persistent DL HARQ IR CC Subburst IE format *(continued)*

Syntax	Size (bit)	Notes
Duration	*variable*	Duration in slots. OFDMA Frame duration dependant 7 bits – 2.5 ms frame 8 bits – 5 ms frame 9 bits – 10 ms frame 10 bits – 20 ms frame
Slot Offset	*variable*	Indicates the start of this persistent allocation in OFDMA slots, with respect to the lowest numbered OFDM symbol and the lowest numbered subchannel in the HARQ region. OFDMA Frame duration dependant 7 bits – 2.5 ms frame 8 bits – 5 ms frame 9 bits – 10 ms frame 10 bits – 20 ms frame
Retransmission Flag	1	0: Deallocation command in Relevant Frame 1: Retransmission of deallocation command in Relevant Frame – Allocation Period
}	—	—
}	—	—
if(Allocation Flag == 1){	—	—
RCID_IE()	*variable*	—
Persistent Flag	1	0 = non-persistent 1 = persistent
if (Power boost per subburst ==1) {	—	—
Boosting	3	0b000: Normal (not boosted) 0b001: +6 dB 0b010: –6 dB 0b011: +9 dB 0b100: +3 dB 0b101: –3 dB 0b110: –9 dB 0b111: –12 dB Note that if the Persistent flag is set, the boosting value applies to each instance of the persistent allocation.
}		
Duration Indicator	1	If Duration Indicator is 1, it indicates that Duration is explicitly assigned for this subburst. Otherwise, this subburst shall use the same Duration as the previous subburst. If *j* is 0 then this indicator shall be 1.
if (Duration Indicator ==1) {	—	—
Duration	*variable*	Duration in slots. OFDMA Frame duration dependant 7 bits – 2.5 ms frame 8 bits – 5 ms frame 9 bits – 10 ms frame 10 bits – 20 ms frame

Table 369—Persistent DL HARQ IR CC Subburst IE format *(continued)*

Syntax	Size (bit)	Notes
}	—	—
Slot Offset	*variable*	Indicates the start of this persistent allocation in OFDMA slots, with respect to the lowest numbered OFDM symbol and the lowest numbered subchannel in the HARQ region. OFDMA Frame duration dependant 7 bits – 2.5 ms frame 8 bits – 5 ms frame 9 bits – 10 ms frame 10 bits – 20 ms frame
if(Persistent Flag == 1){	—	—
Allocation Period and N_ACID Indicator	1	If Allocation Period and N_ACID Indicator is 1, it indicates that allocation information (allocation period, Number of ACID (N_ACID) is explicitly assigned for this subburst. Otherwise, this subburst shall use the same allocation period as the previous subburst. If *j* is 0 then this indicator shall be 1.
if(Allocation Period and N_ACID Indicator == 1){	—	—
Allocation Period (ap)	5	Period of the persistent allocation is this field value plus 1 (unit is frame).
Number of ACID (N ACID)	3	Number of HARQ channels associated with this persistent assignment is this field value plus 1.
}	—	—
MAP NACK Channel Index	6	Index to a shared MAP NACK channel within the Fast Feedback region. When MAP NACK Channel Index = 0b111111, it indicates NO MAP NACK channel is assigned to this allocation.
MAP ACK Channel Index	6	Index to a MAP ACK channel within the Fast Feedback region.
}	—	—
Subburst DIUC indicator	1	If subburst DIUC Indicator is 1, it indicates that DIUC is explicitly assigned for this subburst. Otherwise, this subburst shall use the same DIUC as the previous subburst. If j is 0 then this indicator shall be 1.
if(Subburst DIUC indicator == 1){	—	—
DIUC	4	—
Repetition Coding Indication	2	0b00: No Repetition coding 0b01: Repetition coding of 2 used 0b10: Repetition coding of 4 used 0b11: Repetition coding of 6 used
}	—	—
ACID	4	Initial value of HARQ channel identifier
AI_SN	1	Initial AI_SN for each ACID
SPID	2	—

Table 369—Persistent DL HARQ IR CC Subburst IE format *(continued)*

Syntax	Size (bit)	Notes
ACK disable	1	When ACK Disable == 1, the allocated subburst does not require an ACK to be transmitted by the SS in the ACKCH Region (see 8.4.5.4.23). In this case, no ACK channel is allocated for the subburst in the ACKCH Region. For TDD SS, for the burst, BS shall not perform HARQ retransmission and MS shall ignore ACID, AI_SN and SPID, which shall be set to 0 by BS if they exist. For FDD SS, for the burst, BS shall not perform HARQ retransmission and MS shall ignore AI_SN and SPID, which shall be set to 0 by BS if they exist. For FDD SS, the BS may set the ACID to a value other than 0 if that ACID is listed in the Aggregated HARQ Channels TLV. The CRC shall be appended at the end of each subburst regardless of the ACK disable bit.
if(ACK disable == 0){	—	—
ACK channel	8	Indicates the ACK channel to be used for this sequence of subbursts as defined in 8.4.5.4.23.
}	—	—
Dedicated DL control Indicator	2	LSB #0 indicates inclusion of CQI control LSB #1 indicates inclusion of Dedicated DL Control IE.
if(LSB #0 of dedicated DL control indicator == 1){	—	—
Duration (d)	4	A CQI feedback is transmitted on the CQI channels indexed by the (CQI Channel Index) by the SS for 2(d–1) frames. If d is 0b0000, deallocates all CQI feedback when the current ACID is completed successfully. If d is 0b1111, the MS should report until the BS command for the MS to stop.
if(Duration != 0b0000){	—	—
Allocation index	6	Index to the channel in a frame the CQI report should be transmitted by the SS.
Period (p)	3	A CQI feedback is transmitted on the CQI channels indexed by the (CQI Channel Index) by the SS in every 2^p frames.
Frame offset	3	The MS starts reporting at the frame of which the number has the same 3 LSB as the specified frame offset. If the current frame is specified, the MS should start reporting in eight frames.
}	—	—
}	—	—
if(LSB #1 of dedicated DL control indicator == 1){	—	—
Dedicated DL control IE()	*variable*	—
}	—	—
}	—	—

Table 369—Persistent DL HARQ IR CC Subburst IE format *(continued)*

Syntax	Size (bit)	Notes
}	—	—
Padding	*variable*	Padding to nibble; shall be set to 0.
}	—	—

Table 370—Persistent MIMO DL Chase HARQ Subburst IE format

Syntax	Size (bit)	Notes
Persistent_MIMO_ DL_Chase_HARQ_Subburst_IE() {	—	—
N subburst	4	Number of changed subbursts in the 2D rectangular region is this field value plus 1.
Resource shifting indicator	1	0 = No Resource Shifting 1 = Resource Shifting
for (*j* = 1; *j* < Number of changed subbursts; *j*++) {	—	—
MU Indicator	1	Indicates whether this DL burst is intended for multiple MS 0 = Single MS 1 = multiple MS
Allocation Flag	1	1 = allocate 0 = de-allocate
Dedicated MIMO DL Control Indicator	1	0 = MS shall use the stored Dedicated MIMO DL Control information from the last burst allocation where this information was included. 1 = MS uses the Dedicated MIMO DL control information in this IE.
if(MU Indicator == 0){	—	—
Group Indicator	1	TDD mode: *Reserved*, set to 0. Used for FDD/H-FDD case only; to indicate the group assignment of the MS (see 8.4.4.2 and 8.4.4.2.1) 0b0: Group #1 0b1: Group #2
if(Allocation flag == 0){	—	—
RCID_IE()	*variable*	—
if(Resource shifting indicator==1) {	—	—
Duration	*variable*	Duration in slots. OFDMA Frame duration dependant 7 bits – 2.5 ms frame 8 bits – 5 ms frame 9 bits – 10 ms frame 10 bits – 20 ms frame

Table 370—Persistent MIMO DL Chase HARQ Subburst IE format *(continued)*

Syntax	Size (bit)	Notes
Slot Offset	*variable*	Indicates the start of this persistent allocation in OFDMA slots, with respect to the lowest numbered OFDM symbol and the lowest numbered subchannel in the HARQ region. OFDMA Frame duration dependant 7 bits – 2.5 ms frame 8 bits – 5 ms frame 9 bits – 10 ms frame 10 bits – 20 ms frame
Retransmission Flag	1	0: Deallocation command in Relevant Frame 1: Retransmission of deallocation command in Relevant Frame – Allocation Period
}	—	—
}	—	—
if(Allocation Flag == 1){	—	—
RCID_IE()	*variable*	—
if(Dedicated MIMO DL Control indicator == 1){		
Dedicated MIMO DL Control IE()		
}		
Persistent Flag	1	0 = non-persistent 1 = persistent
Duration Indicator	1	If Duration Indicator is 1, it indicates that Duration is explicitly assigned for this subburst. Otherwise, this subburst shall use the same Duration as the previous subburst. If *j* is 0 then this indicator shall be 1.
If (Duration Indicator == 1) {	—	—
Duration	*variable*	See definition above in this IE.
}	—	—
if (Power boost per subburst ==1) {	—	—
Boosting	3	0b000: Normal (not boosted) 0b001: +6 dB 0b010: –6 dB 0b011: +9 dB 0b100: +3 dB 0b101: –3 dB 0b110: –9 dB 0b111: –12 dB Note that if the Persistent flag is set, the boosting value applies to each instance of the persistent allocation.
}	—	—
Slot Offset	*variable*	See definition above in this IE.

Table 370—Persistent MIMO DL Chase HARQ Subburst IE format *(continued)*

Syntax	Size (bit)	Notes
ACK Disable	1	When ACK Disable == 1, the allocated subburst does not require an ACK to be transmitted by the SS in the ACKCH Region (see 8.4.5.4.23). In this case, no ACK channel is allocated for the subburst in the ACKCH Region. For TDD SS, for the burst, BS shall not perform HARQ retransmission and MS shall ignore ACID, AI_SN and SPID, which shall be set to 0 by BS if they exist. For FDD SS, for the burst, BS shall not perform HARQ retransmission and MS shall ignore AI_SN and SPID, which shall be set to 0 by BS if they exist. For FDD SS, the BS may set the ACID to a value other than 0 if that ACID is listed in the Aggregated HARQ Channels TLV. The CRC shall be appended at the end of each subburst regardless of the ACK disable bit.
if(Persistent Flag == 1){	—	—
Allocation Period and N_ACID Indicator	1	If Allocation Period and N_ACID Indicator is 1, it indicates that allocation information (allocation period, Number of ACID (N_ACID) is explicitly assigned for this subburst. Otherwise, this subburst shall use the same allocation period as the previous subburst. If *j* is 0 then this indicator shall be 1.
If (Allocation Period and N_ACID Indicator == 1) {	—	—
Allocation Period (ap)	5	Period of the persistent allocation is this field value plus 1 (unit is frame).
Number of ACID (N ACID)	3	Number of HARQ channels associated with this persistent assignment is this field value plus 1.
}	—	—
MAP ACK Channel Index	6	Index to a shared MAP ACK channel within the Fast Feedback region.
MAP NACK Channel Index	6	Index to a MAP NACK channel within the Fast Feedback region. When MAP NACK Channel Index = 0b111111, it indicates NO MAP NACK channel is assigned to this allocation.
}	—	—
for(*i* = 0; *i* < N Layers; *i*++){	—	—
DIUC	4	—
Repetition Coding Indication	2	0b00: No Repetition coding 0b01: Repetition coding of 2 used 0b10: Repetition coding of 4 used 0b11: Repetition coding of 6 used
if(ACK disable == 0){	—	—
ACK Channel	8	Indicates the ACK channel to be used for this sequence of subbursts as defined in 8.4.5.4.23.
}	—	—
ACID	4	Initial value of HARQ channel identifier.

Table 370—Persistent MIMO DL Chase HARQ Subburst IE format *(continued)*

Syntax	Size (bit)	Notes
AI_SN	1	Initial AI_SN for each ACID.
}	—	—
}	—	—
}	—	—
if(MU Indicator == 1){	—	—
if(Dedicated MIMO DL Control indicator == 1){	—	—
Dedicated MIMO DL Control IE()	*variable*	—
}	—	—
Layer Relevance Bitmap	4	4 bit bitmap indicating if layer processing should be skipped. The bit position indicates the layer. The bit value: 0 = skip the layer 1 = process the layer
for(*i* =0; *i* < N Layers; *i*++){	—	For each instance of the for-loop, when the corresponding bit in the Layer Relevance Bitmap is set to 0, the subsequent fields within this instance of for-loop are omitted.
Group Indicator	1	TDD mode: *Reserved*, set to 0. Used for FDD/H-FDD case only; to indicate the group assignment of the MS (see 8.4.4.2 and 8.4.4.2.1) 0b0: Group #1 0b1: Group #2
if(Allocation flag == 0){	—	De-allocate
RCID IE()	*variable*	—
if(Resource Shifting Indicator == 1){	—	—
Slot Offset	*variable*	See definition above in this IE.
Duration	*variable*	See definition above in this IE.
Retransmission Flag	1	0: Deallocation command in Relevant Frame 1: Retransmission of deallocation command in Relevant Frame – Allocation Period
}	—	—
}	—	—
if(Allocation Flag == 1){	—	—
RCID IE()	*variable*	—
Persistent flag	1	—
Slot Offset	*variable*	See definition above in this IE.
Duration Indicator	1	If Duration Indicator is 1, it indicates that Duration is explicitly assigned for this subburst. Otherwise, this subburst shall use the same Duration as the previous subburst. If *j* is 0 then this indicator shall be 1.

Table 370—Persistent MIMO DL Chase HARQ Subburst IE format *(continued)*

Syntax	Size (bit)	Notes
if (Duration Indicator == 1) {	—	—
Duration	*variable*	See definition above in this IE.
}	—	—
ACK Disable	1	See definition above in this IE.
DIUC	4	—
Repetition Coding Indication	2	See definition above in this IE.
if(ACK Disable == 0){	—	—
ACK Channel	8	—
}	—	—
ACID	4	—
AI_SN	1	—
if(Persistent Flag == 1){	—	—
Allocation Period and N_ACID Indicator	1	If Allocation Period and N_ACID Indicator is 1, it indicates that allocation information (allocation period, Number of ACID (N_ACID) is explicitly assigned for this subburst. Otherwise, this sub-burst shall use the same allocation period as the previous subburst. If *j* is 0 then this indicator shall be 1.
if (Allocation Period and N_ACID Indicator == 1) {	—	—
Allocation Period	5	See definition above in this IE.
Number of ACID (N ACID)	3	See definition above in this IE.
}	—	—
MAP ACK Channel Index	6	See definition above in this IE.
MAP NACK Channel Index	6	See definition above in this IE.
}	—	—
}	—	—
}	—	—
}	—	—
}	—	—
Padding	*variable*	Padding to nibble; shall be set to 0.
}	—	—

Table 371—Persistent MIMO DL IR HARQ Subburst IE format

Syntax	Size (bit)	Notes
Persistent_MIMO_ DL_Chase_HARQ_Subburst_IE() {	—	—
N subburst	4	Number of changed subbursts in the 2D rectangular region is this field value plus 1
Resource Shifting Indicator	1	0 = No Resource Shifting 1 = Resource Shifting
for (j = 0;j < Number of changed subbursts; j++) {	—	—
MU indicator	1	Indicates whether this DL burst is intended for multiple MS 0 = Single MS 1 = multiple MS
Allocation Flag	1	1 = allocate 0 = de-allocate
Dedicated MIMO DL Control Indicator	1	0 == MS shall use the stored Dedicated MIMO DL Control information from the last burst allocation where this information was included. 1 = MS uses the Dedicated MIMO DL control information is this IE
If (MU Indicator == 0) {	—	—
Group Indicator	1	TDD mode: *Reserved*, set to 0. Used for FDD/H-FDD case only; to indicate the group assignment of the MS (see 8.4.4.2 and 8.4.4.2.1) 0b0: Group #1 0b1: Group #2
If (Allocation flag == 0) {	—	—
RCID IE()	*variable*	—
MAP ACK Channel Index	6	Index to a MAP ACK channel within the Fast Feedback region. When MAP ACK Channel Index = 0b111111, it indicates NO MAP ACK channel is assigned to this de-allocation
if(Resource Shifting Indicator == 1){	—	—
$\mathbf{N_{EP}}$	4	—
$\mathbf{N_{SCH}}$	4	—
Slot Offset	*variable*	Indicates the start of this persistent allocation in OFDMA slots, with respect to the lowest numbered OFDM symbol and the lowest numbered subchannel in the HARQ region. OFDMA Frame duration dependant 7 bits – 2.5 ms frame 8 bits – 5 ms frame 9 bits – 10 ms frame 10 bits – 20 ms frame
Retransmission Flag	1	0: Deallocation command in Relevant Frame 1: Retransmission of deallocation command in Relevant Frame – Allocation Period

Table 371—Persistent MIMO DL IR HARQ Subburst IE format *(continued)*

Syntax	Size (bit)	Notes
}	—	—
}	—	—
if(Allocation Flag == 1){	—	—
RCID IE()	*variable*	—
Persistent flag	1	0 = non-persistent allocation 1 = persistent allocation
if (Power boost per subburst ==1) {	—	—
Boosting	3	0b000: Normal (not boosted) 0b001: +6 dB 0b010: –6 dB 0b011: +9 dB 0b100: +3 dB 0b101: –3 dB 0b110: –9 dB 0b111: –12 dB Note that if the Persistent flag is set, the boosting value applies to each instance of the persistent allocation.
}	—	—
Duration Indicator	1	If Duration Indicator is 1, it indicates that Duration is explicitly assigned for this subburst. Otherwise, this subburst shall use the same Duration as the previous subburst. If *j* is 0 then this indicator shall be 1.
if (Duration Indicator == 1) {	—	—
$\mathbf{N_{EP}}$	4	—
$\mathbf{N_{SCH}}$	4	—
}	—	—
Slot Offset	*variable*	See definition above in this IE
if(Dedicated MIMO DL Control indicator == 1) {	—	—
Dedicated MIMO DL Control IE ()	*variable*	—
}	—	—

Table 371—Persistent MIMO DL IR HARQ Subburst IE format *(continued)*

Syntax	Size (bit)	Notes
ACK Disable	1	When ACK Disable == 1, the allocated subburst does not require an ACK to be transmitted by the SS in the ACKCH Region (see 8.4.5.4.23). In this case, no ACK channel is allocated for the subburst in the ACKCH Region. For TDD SS, for the burst, BS shall not perform HARQ retransmission and MS shall ignore ACID, AI_SN and SPID, which shall be set to 0 by BS if they exist. For FDD SS, for the burst, BS shall not perform HARQ retransmission and MS shall ignore AI_SN and SPID, which shall be set to 0 by BS if they exist. For FDD SS, the BS may set the ACID to a value other than 0 if that ACID is listed in the Aggregated HARQ Channels TLV. The CRC shall be appended at the end of each subburst regardless of the ACK disable bit.
if (Persistent Flag ==1){	—	—
Allocation Period and N_ACID Indicator	1	If Allocation Period and N_ACID Indicator is 1, it indicates that allocation information (allocation period, Number of ACID (N_ACID) is explicitly assigned for this subburst. Otherwise, this subburst shall use the same allocation period as the previous subburst. If *j* is 0 then this indicator shall be 1.
if (Allocation Period and N_ACID Indicator == 1) {	—	—
Allocation Period	5	Period of the persistent allocation is this field value plus 1 (unit is frame).
Number of ACID (N_ACID)	3	Number of HARQ channels associated with this persistent assignment is this field value plus 1.
}	—	—
MAP ACK Channel Index	6	Index to a MAP ACK channel within the Fast Feedback region.
MAP NACK Channel Index	6	Index to a shared MAP NACK channel within the Fast Feedback region. When MAP NACK Channel Index = 0b111111, it indicates NO MAP NACK channel is assigned to this allocation.
}	—	—
for(*i* = 0; *i* < N_Layers; *i*++){	—	—
$\mathbf{N_{EP}}$	4	—
$\mathbf{N_{SCH}}$	4	—
if(ACK Disable == 0){	—	—
ACK Channel	8	Indicates the ACK channel to be used for this sequence of subbursts as defined in 8.4.5.4.23.
}	—	—
SPID	2	—
ACID	4	Initial value of HARQ channel identifier.
AI_SN	1	Initial AI_SN for each ACID.

Table 371—Persistent MIMO DL IR HARQ Subburst IE format *(continued)*

Syntax	Size (bit)	Notes
}	—	—
if(MU Indicator == 1){	—	—
if(Dedicated MIMO DL Control indicator == 1){	—	—
Dedicated MIMO DL Control IE ()	*variable*	—
}	—	—
Layer Relevance Bitmap	4	4 bit bitmap indicating if layer processing should be skipped. The bit position indicates the layer. The bit value: 0 = skip the layer; 1 = process the layer
for(*i* = 0; *i* < N_Layers; *i*++){	—	For each instance of the for-loop, when the corresponding bit in the Layer Relevance Bitmap is set to 0, the subsequent fields within this instance of for-loop are omitted.
Group Indicator	1	TDD mode: *Reserved*, set to 0. Used for FDD/H-FDD case only; to indicate the group assignment of the MS (see 8.4.4.2 and 8.4.4.2.1) 0b0: Group #1 0b1: Group #2
if(Allocation flag == 0){	—	—
RCID IE ()	*variable*	—
MAP ACK Channel Index	6	Index to a MAP ACK channel within the Fast Feedback region. When MAP ACK Channel Index = 0b111111, it indicates NO MAP ACK channel is assigned to this de-allocation.
if (Resource Shifting Indicator == 1) {	—	—
$\mathbf{N_{EP}}$	4	—
$\mathbf{N_{SCH}}$	4	—
Slot Offset	*variable*	See definition above in this IE.
Retransmission Flag	1	0: Deallocation command in Relevant Frame 1: Retransmission of deallocation command in Relevant Frame – Allocation Period
}	—	—
}	—	—
if(Allocation Flag == 1){	—	—
RCID IE ()	*variable*	—
Persistent flag	1	—
Slot Offset	variable	See definition above in this IE.
ACK Disable	1	See definition above in this IE.

Table 371—Persistent MIMO DL IR HARQ Subburst IE format *(continued)*

Syntax	Size (bit)	Notes
Duration Indicator	1	If Duration Indicator is 1, it indicates that Duration is explicitly assigned for this subburst. Otherwise, this subburst shall use the same Duration as the previous subburst. If j is 0 then this indicator shall be 1.
if (Duration Indicator == 1) {	—	—
N_{EP}	4	—
N_{SCH}	4	—
}		
if(ACK Disable == 0){	—	—
ACK Channel	8	—
}	—	—
SPID	2	—
ACID	4	—
AI_SN	1	—
if(Persistent Flag == 1){	—	—
Allocation Period and N_ACID Indicator	1	If Allocation Period and N_ACID Indicator is 1, it indicates that allocation information (allocation period, Number of ACID (N_ACID) is explicitly assigned for this subburst. Otherwise, this sub-burst shall use the same allocation period as the previous subburst. If *j* is 0 then this indicator shall be 1.
if (Allocation Period and N_ACID Indicator == 1) {	—	—
Allocation Period	5	See definition above in this IE.
Number of ACID (N_ACID)	3	See definition above in this IE.
}	—	—
MAP ACK Channel Index	6	See definition above in this IE.
MAP NACK Channel Index	6	See definition above in this IE.
}	—	—
}	—	—
}	—	—
}	—	—
}	—	—
Padding	*variable*	Padding to nibble; shall be set to 0.
}	—	—

Table 372—Persistent MIMO DL IR HARQ CC Subburst IE format

Syntax	Size (bit)	Notes
Persistent_MIMO_ DL_IR_HARQ_Subburst_IE() {	—	—
N subburst	4	Number of changed subbursts in the 2D rectangular region is this field value plus 1
Resource Shifting Indicator	1	0 = No Resource Shifting 1 = Resource Shifting
for(*j* = 0; *j* < Number of changed subbursts; *j*++){	—	—
MU indicator	1	Indicates whether this DL burst is intended for multiple MS 0 = Single MS 1 = multiple MS
Allocation Flag	1	1 = allocate 0 = de-allocate
Dedicated MIMO DL Control Indicator	1	0 == MS shall use the stored Dedicated MIMO DL Control information from the last burst allocation where this information was included. 1 = MS uses the Dedicated MIMO DL control information is this IE
if(MU Indicator == 0){	—	—
Group Indicator	1	TDD mode: *Reserved*, set to 0. Used for FDD/H-FDD case only; to indicate the group assignment of the MS (see 8.4.4.2 and 8.4.4.2.1) 0b0: Group #1 0b1: Group #2
if(Allocation flag == 0){	—	—
RCID IE()	*variable*	—
MAP ACK Channel Index	6	Index to a MAP ACK channel within the Fast Feedback region. When MAP ACK Channel Index = 0b111111, it indicates NO MAP ACK channel is assigned to this de-allocation.
if(Resource Shifting Indicator == 1){	—	—
Duration	*variable*	Duration in slots. OFDMA Frame duration dependant 7 bits – 2.5 ms frame 8 bits – 5 ms frame 9 bits – 10 ms frame 10 bits – 20 ms frame
Slot Offset	*variable*	Indicates the start of this persistent allocation in OFDMA slots, with respect to the lowest numbered OFDM symbol and the lowest numbered subchannel in the HARQ region. – 2.5 ms frame – 10 ms frame – 20 ms frame

Table 372—Persistent MIMO DL IR HARQ CC Subburst IE format *(continued)*

Syntax	Size (bit)	Notes
Retransmission Flag	1	0: Deallocation command in Relevant Frame 1: Retransmission of deallocation command in Allocation Period
}	—	—
}		—
If (allocation Flag == 1) {	—	—
RCID IE()	*variable*	—
Persistent flag	1	0 = non-persistent allocation 1 = persistent allocation
if (Power boost per subburst ==1) {	—	—
Boosting	3	0b000: Normal (not boosted) 0b001: +6 dB 0b010: –6 dB 0b011: +9 dB 0b100: +3 dB 0b101: –3 dB 0b110: –9 dB 0b111: –12 dB Note that if the Persistent flag is set, the boosting value applies to each instance of the persistent allocation.
}	—	—
if (Duration Indicator == 1) {	—	—
Duration	*variable*	See definition above in this IE.
}	—	—
Slot Offset	*variable*	See definition above in this IE.
Dedicated MIMO DL Control Indicator	1	—
ACK Disable	1	When ACK Disable == 1, the allocated subburst does not require an ACK to be transmitted by the SS in the ACKCH Region (see 8.4.5.4.23). In this case, no ACK channel is allocated for the subburst in the ACKCH Region. For TDD SS, for the burst, BS shall not perform HARQ retransmission and MS shall ignore ACID, AI_SN and SPID, which shall be set to 0 by BS if they exist. For FDD SS, for the burst, BS shall not perform HARQ retransmission and MS shall ignore AI_SN and SPID, which shall be set to 0 by BS if they exist. For FDD SS, the BS may set the ACID to a value other than 0 if that ACID is listed in the Aggregated HARQ Channels TLV. The CRC shall be appended at the end of each subburst regardless of the ACK disable bit.
if(Persistent Flag == 1){	—	—

Table 372—Persistent MIMO DL IR HARQ CC Subburst IE format *(continued)*

Syntax	Size (bit)	Notes
Allocation Period and N_ACID Indicator	1	If Allocation Period and N_ACID Indicator is 1, it indicates that allocation information (allocation period, Number of ACID (N_ACID) is explicitly assigned for this subburst. Otherwise, this subburst shall use the same allocation period as the previous subburst. If *j* is 0 then this indicator shall be 1.
if (Allocation Period and N_ACID Indicator == 1) {	—	—
Allocation Period	5	Period of the persistent allocation is this field value plus 1 (unit is frame).
Number of ACID (N_ACID)	3	Number of HARQ channels associated with this persistent assignment is this field value plus 1.
}	—	—
MAP ACK Channel Index	6	Index to a MAP ACK channel within the Fast Feedback region.
MAP NACK Channel Index	6	Index to a shared MAP NACK channel within the Fast Feedback region. When MAP NACK Channel Index = 0b111111, it indicates NO MAP NACK channel is assigned to this allocation.
}	—	—
for(*i* = 0; *i* < N_Layers; *i*++){	—	—
DIUC	4	—
Repetition Coding Indication	2	0b00: No Repetition coding 0b01: Repetition coding of 2 used 0b10: Repetition coding of 4 used 0b11: Repetition coding of 6 used
if(ACK Disable == 0){	—	—
ACK Channel	8	Indicates the ACK channel to be used for this sequence of subbursts as defined in 8.4.5.4.23.
}	—	—
ACID	4	Initial value of HARQ channel identifier.
AI_SN	1	Initial AI_SN for each ACID.
SPID	2	—
}	—	—
if(MU Indicator == 1){	—	—
if(Dedicated MIMO DL Control indicator == 1) {	—	—
Dedicated MIMO DL Control IE ()	*variable*	—
}	—	—

Table 372—Persistent MIMO DL IR HARQ CC Subburst IE format *(continued)*

Syntax	Size (bit)	Notes
Layer Relevance Bitmap	4	4 bit bitmap indicating if layer processing should be skipped. The bit position indicates the layer. The bit value: 0 = skip the layer; 1 = process the layer
for(*i* = 0; *i* < N_Layers; *i*++){	—	For each instance of the for-loop, when the corresponding bit in the Layer Relevance Bitmap is set to 0, the subsequent fields within this instance of for-loop are omitted.
if(Allocation flag == 0){	—	—
Group Indicator	1	TDD mode: *Reserved*, set to 0. Used for FDD/H-FDD case only; to indicate the group assignment of the MS (see 8.4.4.2 and 8.4.4.2.1) 0b0: Group #1 0b1: Group #2
RCID IE ()	*variable*	—
MAP ACK Channel Index	6	Index to a MAP ACK channel within the Fast Feedback region.
if(Resource Shifting Indicator == 1){	—	—
Slot Offset	*variable*	See definition above in this IE.
Duration	*variable*	See definition above in this IE.
Retransmission Flag	1	0: Deallocation command in Relevant Frame 1: Retransmission of deallocation command in Allocation Period
}	—	—
}	—	—
if(Allocation Flag == 1){	—	—
RCID IE ()	*variable*	—
Persistent flag	1	—
Slot Offset	*variable*	See definition above in this IE.
ACK Disable	1	See definition above in this IE.
Duration Indicator	1	If Duration Indicator is 1, it indicates that Duration is explicitly assigned for this subburst. Otherwise, this subburst shall use the same Duration as the previous subburst. If *j* is 0 then this indicator shall be 1.
if (Duration Indicator == 1) {	—	—
Duration	*variable*	See definition above in this IE.
}	—	—
DIUC	4	—
Repetition Coding Indication	2	See definition above in this IE.

Table 372—Persistent MIMO DL IR HARQ CC Subburst IE format *(continued)*

Syntax	Size (bit)	Notes
if(ACK Disable == 0){	—	—
ACK Channel	8	—
}	—	—
ACID	4	Initial value of HARQ channel identifier.
AI_SN	1	—
SPID	2	—
if(Persistent Flag == 1){	—	—
Allocation Period and N_ACID Indicator	1	If Allocation Period and N_ACID Indicator is 1, it indicates that allocation information (allocation period, Number of ACID (N_ACID) is explicitly assigned for this subburst. Otherwise, this subburst shall use the same allocation period as the previous subburst. If *j* is 0 then this indicator shall be 1.
if (Allocation Period and N_ACID Indicator == 1) {	—	—
Allocation Period	5	See definition above in this IE.
Number of ACID (N_ACID)	3	See definition above in this IE.
}	—	—
MAP ACK Channel Index	6	See definition above in this IE.
MAP NACK Channel Index	6	See definition above in this IE.
}	—	—
}	—	—
}	—	—
}	—	—
}	—	—
Padding	*variable*	Padding to nibble; shall be set to zero.
}	—	—

Table 373—Persistent MIMO DL STC HARQ CC Subburst IE format

Syntax	Size (bit)	Notes
Persistent_MIMO_ DL_STC_HARQ_Subburst_IE() {	—	—
N subburst	4	Number of changed subbursts in the 2D rectangular region is this field value plus 1.
Resource Shifting Indicator	1	0 = No Resource Shifting 1 = Resource Shifting
for(*j* = 0; *j* < Number of changed subbursts; *j*++){	—	—
Allocation Flag	1	—
Group Indicator	1	TDD mode: *Reserved*, set to 0. Used for FDD/H-FDD case only; to indicate the group assignment of the MS (see 8.4.4.2 and 8.4.4.2.1) 0b0: Group #1 0b1: Group #2
if(Allocation Flag == 0){	—	// De-allocate
RCID_IE ()	*variable*	—
MAP ACK Channel Index	6	Index to a MAP ACK channel within the Fast Feedback region. When MAP ACK Channel Index = 0b111111, it indicates NO MAP ACK channel is assigned to this de-allocation.
if(Resource Shifting Indicator ==1){	—	// resource shifting is allowed
Duration	*variable*	Duration in slots.OFDMA Frame duration dependant 7 bits–2.5 ms frame 8 bits–5 ms frame 9 bits–10 ms frame 10 bits–20 ms frame
Slot Offset	*variable*	Indicates the start of this persistent allocation in OFDMA slots, with respect to the lowest numbered OFDM symbol and the lowest numbered subchannel in the HARQ region. OFDMA Frame duration dependant 7 bits–2.5 ms frame 8 bits–5 ms frame 9 bits–10 ms frame 10 bits–20 ms frame
Retransmission Flag	1	0: Deallocation command in Relevant Frame 1: Retransmission of deallocation command in Relevant Frame – Allocation Period
}	—	—
}	—	—
if(Allocation Flag == 1)	—	// allocation
RCID_IE()	*variable*	—
Persistent Flag	1	—

Table 373—Persistent MIMO DL STC HARQ CC Subburst IE format *(continued)*

Syntax	Size (bit)	Notes
if (Power boost per subburst ==1) {	—	—
Boosting	3	0b000: Normal (not boosted) 0b001: +6 dB 0b010: –6 dB 0b011: +9 dB 0b100: +3 dB 0b101: –3 dB 0b110: –9 dB 0b111: –12 dB Note that if the Persistent flag is set, the boosting value applies to each instance of the persistent allocation.
}		
if(Persistent Flag == 1){	—	—
Allocation Period and N_ACID Indicator	1	If Allocation Period and N_ACID Indicator is 1, it indicates that allocation information (allocation period, Number of ACID (N_ACID) is explicitly assigned for this subburst. Otherwise, this sub-burst shall use the same allocation period as the previous subburst. If *j* is 0 then this indicator shall be 1.
if (Allocation Period and N_ACID Indicator == 1) {	—	—
Allocation period (ap)	5	Period of the persistent allocation is this field value plus 1 (unit is frame).
MAP NACK Channel Index	6	Index to a shared MAP NACK channel within the Fast Feedback region. When MAP NACK Chan-nel Index = 0b111111, it indicates NO MAP NACK channel is assigned to this allocation.
}		
MAP ACK Channel Index	6	Index to a MAP ACK channel within the Fast Feedback region.
Number of ACID (N_ACID)	3	Number of HARQ channels associated with this persistent assignment is this field value plus 1.
}	—	—
Tx count	2	Tx count shall be set to ‘0’ when Persistent Flag is set to ‘1’.
Duration Indicator	1	If Duration Indicator is 1, it indicates that Duration is explicitly assigned for this subburst. Otherwise, this subburst shall use the same Duration as the previous subburst. If *j* is 0 then this indicator shall be 1.
if (Duration Indicator == 1) {	—	—
Duration	*variable*	Duration in slots. OFDMA Frame duration dependant 7 bits–2.5 ms frame 8 bits–5 ms frame 9 bits–10 ms frame 10 bits–20 ms frame

Table 373—Persistent MIMO DL STC HARQ CC Subburst IE format *(continued)*

Syntax	Size (bit)	Notes
}	—	—
Slot Offset	*variable*	Indicates the start of this persistent allocation in OFDMA slots, with respect to the lowest numbered OFDM symbol and the lowest numbered subchannel in the HARQ region. OFDMA Frame duration dependant 7 bits–2.5 ms frame 8 bits–5 ms frame 9 bits–10 ms frame 10 bits–20 ms frame
ACK disable	1	When ACK Disable == 1, the allocated subburst does not require an ACK to be transmitted by the SS in the ACKCH Region (see 8.4.5.4.23). In this case, no ACK channel is allocated for the subburst in the ACKCH Region. For TDD SS, for the burst, BS shall not perform HARQ retransmission and MS shall ignore ACID, AI_SN and SPID, which shall be set to 0 by BS if they exist. For FDD SS, for the burst, BS shall not perform HARQ retransmission and MS shall ignore AI_SN and SPID, which shall be set to 0 by BS if they exist. For FDD SS, the BS may set the ACID to a value other than 0 if that ACID is listed in the Aggregated HARQ Channels TLV. The CRC shall be appended at the end of each subburst regardless of the ACK disable bit.
if(Tx count == 0){	—	—
Dedicated MIMO DL Control indicator	1	—
if(Dedicated MIMO DL Control indictor ==1){	—	—
Dedicated MIMO DL Control IE ()	*variable*	—
}	—	—
DIUC	4	—
Repetition Coding Indicator	2	—
}	—	—
ACID	4	Initial value of HARQ channel identifier.
}	—	—
}	—	—
Padding	*variable*	Padding to nibble; shall be set to zero.
}	—	—

8.4.5.3.30 Power Boosting IE

In the DL-MAP, BS may transmit the Power Boosting IE, as shown in Table 374, to signal the update of power boosting information for persistent allocations assigned to MSs by the Persistent HARQ DL MAP IE.

The power boosting information in the Power Boosting IE shall be applied to persistent allocation associated with the R_CID and ACID in the Power Boosting IE.

Table 374—Power Boosting IE

Syntax	Size (bit)	Notes
Power boosting IE{	—	—
Extended-2 DIUC	4	Power boosting IE() = 0xF (Extended-3 DIUC)
Length	8	Length in bytes
Extended-3 DIUC	4	0x00
RCID_Type	2	0b00: Normal CID 0b01: RCID11 0b10: RCID7 0b11: RCID3
Number of Risks	4	
for(*i* = 0; *i* < Number of RCIDs; *i*++){	—	
R_CID	*variable*	
A_CID	4	Start of ACID
Boosting	3	0b000: Normal (not boosted) 0b001: +6 dB 0b010: –6 dB 0b011: +9 dB 0b100: +3 dB 0b101: –3 dB 0b110: –9 dB 0b111: –12 dB
}		
Padding	*variable*	Padding to byte for the unspecified portion of this IE (i.e., not including the first two fields, “Extended-2 DIUC” and “Length”); shall be set to 0.
}	—	—

8.4.5.3.31 Extended Broadcast Control Pointer IE

In instead of Broadcast Control Pointer IE, BS may include an Extended Broadcast Control Pointer IE, as shown in Table 375, in one of Downlink MAP messages (see 8.4.5.3.25) in order to indicate the frame in which ESM(s) shall be transmitted.

Table 375—Extended Broadcast Control Pointer IE format

Syntax	Size (bit)	Notes
Broadcast_Control_Pointer_IE() {	—	—
Extended DIUC	4	Extended Broadcast_Control_Pointer_IE() = 0xE

Table 375—Extended Broadcast Control Pointer IE format *(continued)*

Syntax	Size (bit)	Notes
Type	4	Indicates the type of message. 0x0 : Emergency Service Message 0x1~0xF : *Reserved*
Transmission Frame Offset	16	A relative value from the current frame number in which a BS will start to transmit Emergency Service Message. '0' means the current frame in which this MAP IE is transmitted.
Transmission Duration	8	Indicates the period during which an MS in Idle Mode or Sleep Mode shall keep awake to receive emergency service message(s). The value '0' indicates that the MS keeps awake during only Transmission Frame. Its unit is frame.
}	—	—

8.4.5.4 UL-MAP IE format

The OFDMA UL-MAP IE defines UL bandwidth allocations. UL bandwidth allocations are specified either as block allocations (subchannel by symbol) with an absolute offset or as an allocation with duration in slots with either a relative or absolute slot offset. Block allocations are used for fast feedback (UIUC = 0), HARQ ACK CH region (UIUC-11 (Extended-2 UIUC) with Type = 8), CDMA ranging and BR allocations (UIUC = 12) as well as PAPR/safety zone allocations (UIUC = 13). Slot allocations are used for all other UL bandwidth allocations. For UL allocations in non-AAS zones, the starting position for the allocation is determined considering the prior allocations appearing in the UL-MAP. For UL allocations in an AAS UL zone, the starting position is included in the UL IE indicating an absolute slot offset from the beginning of the AAS zone. If an OFDMA UL-MAP IE with UIUC = 0 or UIUC = 11, (Extended-2) with Type = 8 or UIUC = 12 or UIUC = 13 exists, it shall always be allocated first. In FDD/H-FDD, if uplink allocation is made for FDD MSs in the other UL Group (that is, the UL Group different from the UL-MAP belongs to), OFDMA UL-MAP IE with UIUC 11 with Type = 13 shall be used to notify that allocation.

For the first OFDMA UL-MAP IE with UIUC other than 0, UIUC = 11 (Extended-2) with Type = 8, UIUC = 12, or UIUC = 13, the allocation shall start at the lowest numbered nonallocated subchannel on the first nonallocated OFDMA symbol defined by the Allocation Start Time field of the UL-MAP message that is not allocated with UIUC = 0 or UIUC = 11 (Extended-2) with Type = 8 or UIUC = 12 or UIUC = 13 (see Figure 221 for an example). These IEs shall represent the number of slots provided for the allocation. For allocations not in an AAS zone, each allocation IE shall start immediately following the previous allocation and shall advance in the time axis. If the end of the UL zone has been reached, the allocation shall continue at the next subchannel at first OFDMA symbol allocated to that zone that is not allocated with UIUC = 0 or UIUC = 11 (Extended-2) with Type = 8 or UIUC = 12 or UIUC = 13. A UIUC shall be used to define the type of UL access and the burst type associated with that access. A burst descriptor shall be specified in the UCD for each UIUC to be used in the UL-MAP. For further details on allocations in an UL AAS zone, see 8.4.4.7.

The format of the UL-MAP IE is defined in Table 376.

Table 376—OFDMA UL-MAP IE format

Syntax	Size (bit)	Notes
UL-MAP_IE() {	—	—
CID	16	—
UIUC	4	—
if (UIUC == 11) {	—	—
Extended UIUC 2 dependent IE	*variable*	See 8.4.5.4.4.2
}	—	—
else if (UIUC == 12) {	—	—
OFDMA Symbol offset	8	—
Subchannel offset	7	—
No. OFDMA Symbols	7	—
No. Subchannels	7	—
Ranging Method	2	0b00: Initial ranging/Handover Ranging over two symbols 0b01: Initial ranging/Handover Ranging over four symbols 0b10: BR/periodic ranging over one symbol 0b11: BR/periodic ranging over three symbols
Dedicated ranging indicator	1	0: The OFDMA region and ranging method defined are used for the purpose of normal ranging 1: The OFDMA region and ranging method defined are used for the purpose of ranging using dedicated CDMA code and transmission opportunities assigned in the MOB_PAG-ADV message, in the RNG-RSP message, or in the MOB_SCN-RSP message.
} else if (UIUC == 13) {	—	—
PAPR_Reduction_and_Safety_Zone_ Sounding Zone Allocation_IE	32	—
} else if (UIUC == 14) {	—	—
CDMA_Allocation_IE()	40	—
} else if (UIUC == 15) {	—	—
Extended UIUC-dependent IE	*variable*	See 8.4.5.4.4.1.
} else if (UIUC == 0) {	—	—
FAST-FEEDBACK_Allocation_IE()	32	—
} else {	—	—
Duration	10	In OFDMA slots (see 8.4.3.1).

Table 376—OFDMA UL-MAP IE format *(continued)*

Syntax	Size (bit)	Notes
Repetition coding indication	2	0b00: No repetition coding 0b01: Repetition coding of 2 used 0b10: Repetition coding of 4 used 0b11: Repetition coding of 6 used
if (AAS or AMC UL Zone) {	—	AAS/AMC Allocations include absolute slot offset.
Slot offset	12	Offset from start of the AAS or AMC zone for this allocation, specified in slots.
}	—	—
}	—	—
}	—	—

CID
The CID shall be the SS's Basic CID for UIUC 1~10, 11 or 15, when appropriate, and the broadcast or multicast CID for UIUC 0 and 11~15.

UIUC
UIUC used for the burst.

OFDMA symbol offset
The offset of the OFDMA symbol in which the burst starts, the offset value is defined in units of OFDMA symbols and is relevant to the Allocation Start Time field given in the UL-MAP message.

Subchannel offset
The lowest index subchannel used for carrying the burst, starting from subchannel 0.

No. OFDMA symbols
The number of OFDMA symbols that are used to carry the UL burst.

No. subchannels
The number of subchannels with subsequent indices.

Duration
Indicates the duration, in units of OFDMA slots, of the allocation.

Repetition coding indication
Indicates the repetition code used inside the allocated burst. Repetition shall be used only for UIUC indicating QPSK modulation.

When a ranging region (UIUC = 12) is present in the UL subframe, and the SS is in ranging backoff state, it shall count the ranging opportunities present in the ranging region. Only ranging allocations allocated in permutation zones supported by the SS and matching the type of backoff the SS (ranging or BR) shall be considered as containing relevant ranging opportunities.

The subchannel offsets in all formats of UL-MAP IE are referred to logical subchannels before applying the mapping indicated by UL subchannel's bitmap in UCD and rotation scheme (see 8.4.6.2.6) for the UL.

For SUB-UL-DL-MAPs, the current UL zone is automatically reset to the UL zone containing the OFDMA symbol whose offset is specified in the SUB-DL-UL-MAP. The current UL zone is thereafter updated whenever an UL-MAP IE contains an explicit OFDMA symbol offset.

Some control regions may be defined in UCD via FastFeedback Region TLV, HARQ ACK Region TLV, Ranging Region TLV and Sounding Region TLV. These control regions include

— Initial/HO ranging region, Periodic Ranging/BW request region (UIUC = 12)
— FastFeedback region (UIUC = 0)
— DL HARQ ACK region (UIUC = 11 (Extended 2 UIUC with Type = 8)
— UL Sounding region (UIUC = 13 with Sounding Zone bit = 1)

These UCD TLVs specify a data region within UL subframe and frame numbers of UL MAP where the corresponding control region IE would appear, however when such a control region is specified by a UCD TLV, the corresponding control region IE does not need to appear in the UL MAP. The frame numbers of UL MAP are described by periodicity and phase so that MS can identify the numbers as sum of phase and integer multiples of periodicity. The actual UL subframes where MS transmit UL signals are further delayed by UL Allocation Start Time of UL MAP.

If certain TLV is present in UCD messages with certain value of the Configuration Change Count, the corresponding allocation shall be valid in all UL subframes specified by UL MAP messages with the same value of Configuration Change Count.

If UL MAP allocates one or more of the regions defined via UIUC=0, UIUC=11 (extended 2 UIUC with type=8), UIUC=12 or UIUC=13, these UIUC allocations override the corresponding allocations of the periodic regions defined by UCD in the specific frame.

8.4.5.4.1 UIUC allocation

Table 377 defines the UIUC encoding that shall be used in the UL-MAP_IE().

Table 377—OFDMA UIUC values

UIUC	Usage
0	Fast-feedback channel
1–10	Different burst profiles (Data Grant Burst Type)
11	Extended UIUC 2 IE
12	CDMA BR, CDMA ranging
13	PAPR reduction allocation, safety zone, Sounding Zone
14	CDMA Allocation IE
15	Extended UIUC

The UIUC = 0 is used for allocation of fast-feedback channel region. There shall not be more than one UL-MAP IE with UIUC = 0 for a UL frame. The UIUC = 13 is used for allocation of Subchannels for PAPR reduction schemes. The data subcarriers within these subchannels may be used by all SSs to reduce PAPR of their transmissions. Alternatively, it can also be used by the BS to create coverage enhancing safety zones for UL. This is intended to provide reduced interference zones within the coverage area of the SS. The reduced interference zones are useful when the SS in the neighboring BS are near the cell edge and interfering with SS in the current BS. In such situations, the reduced interference zones may be used by the SS in the neighboring BS so that the SS in the current BS do not suffer from interference.

The CDMA allocation UIUC provides (among other things) a function similar to the initial ranging UIUC used in other PHY options; therefore, instructions that relate to messages transmitted in the initial ranging UIUC shall apply to messages transmitted in the CDMA allocation UIUC as well.

8.4.5.4.2 PAPR Reduction/Safety Zone/Sounding Zone Allocation IE

Table 378 defines the PAPR Reduction/Sounding Zone/Safety Zone Allocation IE. This IE is identified by UIUC = 13. When a UIUC 13 allocation is used to define a Sounding Zone, it shall occupy one or more entire OFDMA symbol(s) and be located in the last symbol(s) of a permutation zone.

Table 378—PAPR Reduction/Safety Zone/Sounding Zone Allocation IE format

Syntax	Size (bit)	Notes
PAPR_Reduction_Safety_Sounding_Zone_Allocation_IE() {	—	—
OFDMA symbol offset	8	—
Subchannel offset	7	Not used for Sounding Zone
No. OFDMA symbols	7	—
No. subchannels/SZ Shift Value	7	No. Subchannels for PAPR reduction/safety zone. Shift value (u) for Sounding Zone
PAPR Reduction/Safety Zone	1	0 = PAPR reduction allocation 1 = Safety zone allocation
Sounding Zone	1	0 = PAPR/safety zone 1 = Sounding zone allocation
Reserved	1	Shall be set to zero
}	—	—

OFDMA symbol offset
The offset of the OFDMA symbol in which the PAPR reduction/safety zone starts. The offset value is defined in units of OFDMA symbols and is relevant to the Allocation Start Time field given in the UL-MAP message.

Subchannel offset
The lowest index subchannel that is used for the PAPR reduction/safety zone, starting from subchannel 0. For Sounding Zone allocations this field is unused and its value shall be set to zero.

No. OFDMA symbols
The number of OFDMA symbols that are used for the UL PAPR reduction/safety zone.

Number of subchannels/SZ Shift Value
The number of subchannels with subsequent indexes that are used for the PAPR reduction/safety zone. For Sounding Zone allocations this field defines the shift value (u) used for decimation offset and cyclic shift index.

8.4.5.4.3 CDMA Allocation UL-MAP IE format

Table 379 defines the UL-MAP IE for allocation of bandwidth to a user that requested bandwidth using a CDMA request code. This IE is identified by UIUC =14.

Table 379—CDMA Allocation IE format

Syntax	Size (bit)	Notes
CDMA_Allocation_IE() {	—	—
Duration	6	—
UIUC	4	UIUC for transmission
Repetition Coding Indication	2	0b00: No repetition coding 0b01: Repetition coding of 2 used 0b10: Repetition coding of 4 used 0b11: Repetition coding of 6 used
Frame Number Index	4	LSBs of relevant frame number
Ranging Code	8	—
Ranging Symbol	8	—
Ranging subchannel	7	—
BW request mandatory	1	1: Yes 0: No
}	—	—

Duration
Indicates the duration, in units of OFDMA slots, of the allocation.
Repetition coding indication
Indicates the repetition code used inside the allocated burst.
Frame Number Index
Identifies the frame in which the CDMA code to which this message responds was transmitted. The 4 LSBs of the frame number are used as the frame number index.
Ranging Code
Indicates the CDMA code sent by the SS.
Ranging Symbol
Indicates the OFDMA symbol used by the SS.
Ranging subchannel
Identifies the ranging subchannel used by the SS to send the CDMA code.
BW request mandatory
Indicates whether the SS shall include a BR in the allocation.

8.4.5.4.4 UL-MAP Extended IE

8.4.5.4.4.1 UL-MAP Extended IE format

A UL-MAP IE entry with a UIUC = 15 indicates that the IE carries special information and conforms to the structure shown in Table 380. A station shall ignore an extended IE entry with an extended UIUC value for which the station has no knowledge. In the case of a known extended UIUC value but with a length field longer than expected, the station shall process information up to the known length and ignore the remainder of the IE.

Table 381 defined the encoding for extended UIUC that shall be used by UL-MAP Extended IEs.

Table 380—OFDMA UL-MAP Extended IE format

Syntax	Size (bit)	Notes
UL_Extended_IE() {	—	—
Extended UIUC	4	0x0..0xF
Length	4	Length in bytes of Unspecified Data field
Unspecified data	*variable*	—
}	—	—

Table 381—Extended UIUC code assignment for UIUC = 15

Extended UIUC (hexadecimal)	Usage
0x0	Power Control IE
0x1	*Reserved*
0x2	AAS UL IE
0x3	CQICH Allocation IE
0x4	UL Zone IE
0x5	UL-MAP Physical Modifier IE
0x6	*Reserved*
0x7	UL-MAP Fast Tracking IE
0x8	UL PUSC Burst Allocation in Other Segment IE
0x9	Fast Ranging IE
0xA	UL Allocation Start IE
0xB … 0xF	*Reserved*

8.4.5.4.4.2 UL-MAP Extended-2 IE format

A UL-MAP IE entry with a UIUC = 11 indicates that the IE carries special information and conforms to the structure shown in Table 382. A station shall ignore an Extended-2 IE entry with an extended-2 UIUC value for which the station has no knowledge. In the case of a known extended-2 UIUC value but with a length field longer than expected, the station shall process information up to the known length and ignore the remainder of the IE.

The Unspecified Data field shall be padded with bits set to zero to get an integer number of bytes, specified by Length, in the data field of the IE.

Table 382—UL-MAP Extended-2 IE format

Syntax	Size (bit)	Note
UL_Extended-2_IE() {	—	—
Extended-2 UIUC	4	0x0 … 0xF
Length	8	Length in bytes of Unspecified Data field
Unspecified Data	*variable*	—
}	—	—

Table 383 defines the encoding for extended-2 UIUC that shall be used by UL-MAP Extended-2 IEs.

Table 383—Extended-2 UIUC code assignment for UIUC = 11

Extended-2 Type (hexadecimal)	Usage
0x0	CQICH Enhanced Allocation IE
0x1	HO Anchor Active UL-MAP IE
0x2	HO Active Anchor UL-MAP IE
0x3	Anchor BS Switch IE
0x4	UL Sounding Command IE
0x5	Extended-3 UIUC
0x6	MIMO UL Enhanced IE
0x7	HARQ UL MAP IE
0x8	HARQ ACKCH Region Allocation IE
0x9	MIMO UL Basic IE
0xA	Mini-subchannel allocation IE
0xB	UL_PC_Bitmap IE
0xC	Persistent HARQ UL MAP IE
0xD	FDD Paired Allocation IE
0xE	AAS SDMA UL IE
0xF	Feedback Polling IE

8.4.5.4.4.3 UL-MAP Extended-3 IE format

A UL-MAP IE entry with an Extended-2 UIUC = 0x5 indicates that the IE carries special information and conforms to the structure shown in Table 384. A station shall ignore an Extended-3 IE entry with an extended-3 UIUC value for which the station has no knowledge. In the case of a known extended-3 UIUC

value but with a length field longer than expected, the station shall process information up to the known length and ignore the remainder of the IE.

The Unspecified Data field shall be padded with bits set to zero to get an integer number of bytes, specified by Length, in the data field of the IE.

Table 384—UL-MAP Extended-3 IE format

Syntax	Size (bit)	Note
UL_Extended-3_IE() {	—	—
Extended-2 UIUC	4	0xF
Length	8	Length in bytes of the unspecified data field plus the extended-3 UIUC field
Extended-3 UIUC	4	0x00 … 0x0F
Unspecified Data	*variable*	—
}	—	—

Table 385 defines the encoding for extended-3 UIUC that shall be used by UL-MAP Extended-3 IEs.

Table 385—Extended-3 UIUC code assignment for Extended-2 UIUC = 05

Extended-3 UIUC (hexadecimal)	Usage
0x0–0xF	*Reserved*

8.4.5.4.5 Power Control IE format

When a power change for the SS is needed, the extended UIUC = 15 may be used with the subcode 0x00 and with 8-bit power control value as shown in Table 386. The power control value is an 8-bit signed integer expressing the change in power level (in 0.25 dB units) that the SS should apply to correct its current transmission power.

The CID used in the IE should be the Basic CID of the SS.

Table 386—OFDMA Power Control IE

Syntax	Size (bit)	Notes
Power_Control_IE() {	—	—
Extended UIUC	4	Fast power control = 0x0
Length	4	Length = 0x2

Table 386—OFDMA Power Control IE *(continued)*

Syntax	Size (bit)	Notes
Power control	8	Signed integer, which expresses the change in power level (in 0.25 dB units) that the SS should apply to correct its current transmission power.
Power measurement frame	8	—
}	—	—

Power measurement frame

The 8 LSB of the frame number in which the BS measured the power corrections referred to in the message.

8.4.5.4.6 AAS UL IE format

Within a frame, the switch from non-AAS to AAS-enabled traffic is marked by using the extended UIUC = 15 with the AAS_UL_IE() to indicate that the subsequent allocation shall be for AAS traffic. The AAS UL IE defines a UL AAS zone that spans continuous OFDMA symbols of length defined by the AAS zone Length field. Multiple UL AAS zones can exist within the same frame. When used, the CID in the UL-MAP_IE() shall be set to the Broadcast CID. All UL bursts in the AAS portion of the frame may be preceded by an AAS preamble based on the indication in the AAS_UL_IE(). The preamble is defined in 8.4.4.7.4.2. Table 387 shows the format for the AAS UL IE.

Table 387—OFDMA AAS UL IE format

Syntax	Size (bit)	Notes
AAS_UL_IE() {	—	—
Extended UIUC	4	AAS = 0x2
Length	4	Length = 0x3
Permutation	2	0b00: PUSC permutation 0b01: Optional PUSC permutation 0b10: adjacent-subcarrier permutation 0b11: *Reserved*
UL_PermBase	7	—
OFDMA symbol offset	8	—
AAS zone length	8	Number of OFDMA symbols in AAS zone
Uplink_preamble_config	2	0b00: 0 symbols 0b01: 1 symbols 0b10: 2 symbols 0b11: 3 symbols
Reserved	5	Shall be set to zero
}	—	—

Permutation
Defines the permutation used within the UL AAS zone.
UL_PermBase
Permutation base for specified UL AAS zone.
OFDMA Symbol offset
The symbol offset of the UL AAS zone. This is referenced to the Allocation Start Time field in the UL-MAP.
Uplink_preamble_config
Defines the number of UL AAS preambles to be used before each UL burst in the AAS zone.

Following an AAS IE indicating AMC permutation, the AMC type shall be 2x3 (2 bins by 3 symbols).

8.4.5.4.7 UL Zone Switch IE format

In the UL-MAP, a BS may transmit UIUC = 15 with the UL_Zone_IE() to indicate that the subsequent allocations shall use a specific permutation. A UL_Zone_IE() may appear ahead of all UL Allocation IEs and indicate the permutation of the first and the following slots. If a UL_Zone_IE() does not appear ahead of all UL Allocation IEs, the UL frame shall start in PUSC mode with UL_PermBase as indicated in the UCD message. Allocations subsequent to this IE shall use the permutation it instructs. No burst allocation or ranging channel allocation shall span multiple zones. Table 388 shows the format for a UL Zone IE.

In FDD/H-FDD, the UL Zone Switch IE can be included in the FDD_Paired_Allocation_IE(). If the UL Zone Switch IE is included in the FDD_Paired_Allocation_IE(), it indicates the configuration of the uplink zone in the other UL Group (that is, the UL Group different from the UL-MAP belongs to). UL-MAP IEs following the UL Zone Switch IE included in the FDD_Paired_Allocation_IE() shall indicate uplink allocations made in the other UL Group. If the zone permutation of the last uplink zone in the first subframe (UL Group2) and that of the first uplink zone in the second subframe (UL Group1) are the same, BS may enable uplink burst allocation made over two consecutive subframes in the same frame by setting H-FDD Over_subframe Allocation = 1. If the gap in-between two uplink subframes (UL_gap) is multiple of uplink slot duration, BS may set H-FDD Inter-UL_gap Allocation = 1 for the last uplink zone in UL Group2 to indicate F-FDD MS that the uplink allocation shall be made up to the slots in the UL_gap.

Table 388—OFDMA UL Zone IE format

Syntax	Size (bit)	Notes
UL_Zone_IE() {	—	—
Extended UIUC	4	UL_Zone = 0x4
Length	4	Length = 0x3
OFDMA symbol offset	7	—
Permutation	2	0b00: PUSC permutation 0b01: Optional PUSC permutation 0b10: Adjacent subcarrier permutation 0b11: *Reserved*
UL_PermBase	7	—

Table 388—OFDMA UL Zone IE format *(continued)*

Syntax	Size (bit)	Notes
AMC type	2	Indicates the AMC type in case permutation type = 0b10, otherwise shall be set to 0. AMC type (NxM = N bins by M symbols): 0b00: 1x6 0b01: 2x3 0b10: 3x2 0b11: *Reserved*
Use All SC indicator	1	0: Do not use all subchannels 1: Use all subchannels
Disable subchannel rotation	1	Only applies to PUSC permutation (see 8.4.6.2.6) 0 = subchannel rotation enabled 1 = subchannel rotation disabled
H-FDD over-subframe allocation	1	Only applies to FDD/H-FDD and shall be set to zero for TDD. 0b0: Disable UL over-subframe allocation 0b1: Enable UL over-subframe allocation
H-FDD Inter-UL_gap allocation	1	Only applies to FDD/H-FDD and shall be set to zero for TDD. 0b0: Disable inter-UL_gap allocation 0b1: Enable inter-UL_gap allocation
Reserved	2	Shall be set to zero
}	—	—

OFDMA symbol offset

The offset of the OFDMA symbol in which the zone starts, the offset value is defined in units of OFDMA symbols and is relevant to the Allocation Start Time field given in the UL-MAP message.

Permutation

Indicates the permutation that shall be used by the transmitter for allocations following this IE. Permutation changes are only allowed on a zone boundary. The UL_PermBase indicated by the IE shall be used as the basis of the permutation (see 8.4.6.2.2 and 8.4.6.2.3).

Use All SC indicator

When the Use All SC indicator bit is set to 0, subchannels indicated by the allocated subchannel bitmap in UCD shall be used. Otherwise, all subchannels shall be used. This field shall be ignored in zones other than PUSC and O-PUSC.

This IE should not be used within SUB-DL-UL-MAP.

8.4.5.4.8 Mini-Subchannel Allocation IE

The Mini-Subchannel Allocation IE is used for subdividing subchannels into mini-subchannels. This IE uses the extended UIUC = 15 with the subcode 0x01 with the structure shown in Table 389. The CID in the UL-MAP when using the mini-subchannel allocation IE shall be set to the Broadcast CID.

Table 389—Mini-Subchannel Allocation IE format

Syntax	Size (bit)	Notes
Mini_Subchannel_Allocation_IE() {	—	—
Extended-2 UIUC	4	Mini subchannel allocation = 0xA
Length	8	Length(M) = 0x07 if $M = 2$ 0x0A if $M = 3$ 0x12 if $M = 6$
CType	2	0b00: 2 mini-subchannels (defines $M = 2$) 0b01: 2 mini-subchannels (defines $M = 2$) 0b10: 3 mini-subchannels (defines $M = 3$) 0b11: 6 mini-subchannels (defines $M = 6$)
Duration	6	In OFDMA slots
For ($j = 0$; $j < M$; j++) {	—	—
CID(j)	16	—
UIUC(j)	4	Allowed values are 1–10
Repetition(j)	2	Indicates the repetition code used inside the allocated burst for mini-subchannel with index j 0b00: No repetition coding 0b01: Repetition coding of 2 used 0b10: Repetition coding of 4 used 0b11: Repetition coding of 6 used Repetition shall be used only for $M = 2$ or $M = 3$
}	—	—
Padding	n	Padding bits shall be set to zero $n = 4$ if $M = 2$ 6 if $M = 3$ 4 if $M = 6$
}	—	—

Ctype
Defines M, the number of mini-subchannels allocated by this IE.

Duration
Defines the allocation duration in OFDMA slots. The duration shall be an integer multiple of M.

CID(j)
CID to use for mini-subchannel with index j.

UIUC(j)
UIUC to use for mini-subchannel with index j. Allowed values are 1–10.

Repetition(j)
Indicates the repetition code used inside the allocated burst for mini-subchannel with index j.

8.4.5.4.9 Fast-Feedback Allocation IE

The Fast-feedback Allocation IE is used to specify allocations for the fast-feedback slots. Fast-feedback slots are mapped in to the region marked by UIUC = 0 in the UL-MAP, in a frequency-first order, as shown in Figure 241.

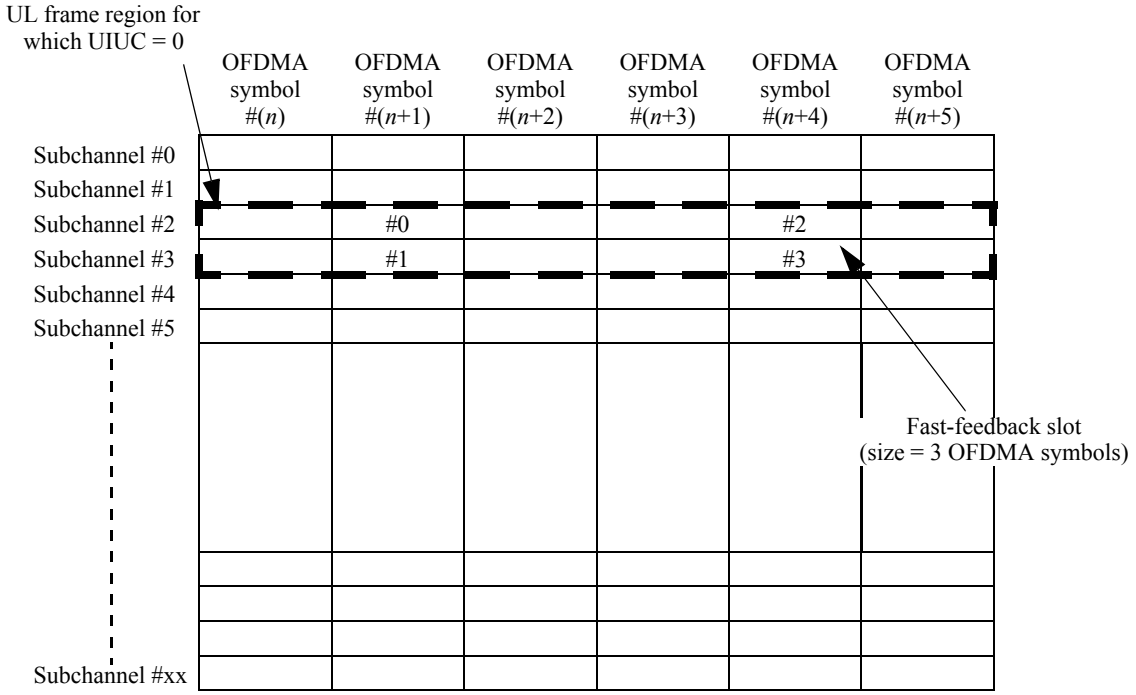

Figure 241—Mapping order of fast-feedback messages to the fast-feedback region

The fast-feedback region shall be allocated using the Fast-Feedback Allocation IE as defined in Table 390.

Table 390—Fast-Feedback Allocation IE format

Syntax	Size (bit)	Notes
FASTFEEDBACK_Allocation_IE() {	—	—
OFDMA symbol offset	8	—
Subchannel offset	7	—
No. OFDMA symbols	7	—
No subchannels	7	—
Reserved	3	—
}	—	—

8.4.5.4.10 MIMO UL Basic IE format

In the UL-MAP, a MIMO-enabled BS may transmit UIUC = 15 with the MIMO_UL_Basic_IE() to indicate the MIMO mode of the UL allocations described in this IE (see Table 391). The MIMO mode indicated in the MIMO_UL_Basic_IE() shall only apply to the UL allocation within the IE. This IE may be used either for a MIMO-enabled SS or for an SS that supports only collaborative SM. The IE may also be used to assign allocations in AAS zones to AAS-enabled SSs that are capable of collaborative SM.

Table 391—MIMO UL Basic IE format

Syntax	Size (bit)	Notes
MIMO_UL_Basic_IE() {	—	—
Extended-2 UIUC	4	MIMO = 0x9
Length	8	*variable*
Num_Assign	4	"Number of assigned bursts" is this field value plus 1
For (*j* = 0; *j* < Number of assigned bursts; *j*++) {	—	—
Collaborative_SM _Indication	1	0: Noncollaborative SM (vertical coding assignment to a MIMO-capable SS) 1: Collaborative SM (assignment to two collaborative SM-capable SSs)
If (Collaborative_SM _Indication == 0) {	—	—
CID	16	SS Basic CID
UIUC	4	—
Repetition coding indication	2	0b00: No repetition coding 0b01: Repetition coding of 2 used 0b10: Repetition coding of 4 used 0b11: Repetition coding of 6 used
MIMO_Control	1	For dual transmission capable SS 0: STTD 1: SM For Collaborative SM capable SS 0: Pilot pattern A 1: Pilot pattern B
} else {	—	—
CID_A	16	Basic CID of SS that shall use pilot pattern A
UIUC_A	4	UIUC used for the allocation that uses pilot pattern A
Repetition coding indication A	2	Repetition coding used for the allocation that uses pilot pattern A 0b00: No repetition coding 0b01: Repetition coding of 2 used 0b10: Repetition coding of 4 used 0b11: Repetition coding of 6 used
CID_B	16	Basic CID of SS that shall use pilot pattern B

Table 391—MIMO UL Basic IE format *(continued)*

Syntax	Size (bit)	Notes
UIUC_B	4	UIUC used for the allocation that uses pilot pattern B
Repetition coding indication B	2	Repetition coding used for the allocation that uses pilot pattern B 0b00: No repetition coding 0b01: Repetition coding of 2 used 0b10: Repetition coding of 4 used 0b11: Repetition coding of 6 used
}	—	—
Duration	10	In OFDMA slots (see 8.4.3.1)
}	—	—
}	—	—

Num_assign
This field specifies the number of assignments in this IE. The actual number of assigned bursts is this field value plus 1.

MIMO_Control
MIMO_Control field specifies the MIMO mode of the corresponding UL burst.

Table 392 summarizes the modes of operation specified by MIMO_UL_Basic_IE(). For each mode, it details the following:

— Number of antennas
— Values of Collaborative_SM_indication and MIMO_control
— Number of different CIDs stated in the appropriate case of the “if” statement
— Implicit type and rate of coding

Table 392—MIMO UL Basic IE operation modes

Mode	Number of Tx antennas per SS	Collaborative_ SM_ Indication	MIMO_ control	CIDs	Coding type	Rate
Collaborative MIMO, 2 SSs	1	1	N/A	CID_A != CID_B	Two SS, each transmits from antenna #0	1 per SS
Spatial multiplexing, vertical coding	2	0	1	Single CID	SM with vertical coding for single user	2
STTD	2	0	0	Single CID	STTD	1

Vertical coding
Indicates transmitting the same coded stream over multiple antennas.

Rate
The number of QAM symbols signaled per array channel use.

8.4.5.4.11 CQICH Allocation IE Format

CQICH_Alloc_IE() is introduced to dynamically allocate or deallocate a CQICH to an SS. Once allocated, the SS transmits channel quality information on the assigned CQICH on subsequent frames until the SS receives a CQICH_Alloc_IE() to deallocate the assigned CQICH or until the MS receives a sleep control message (MOB_SLP-RSP, RNG-RSP or DL sleep control extended subheader) with Stop_CQI_Allocation_Flag = 1. It is up to BS to decide whether CQI reported in sleep mode can be of use. Capability of using Stop_CQI_Allocation_Flag for de-allocating CQI channel is optional for the BS. An MS in sleep mode (during the unavailability interval) shall not transmit on the assigned CQICH. If, while in sleep (with traffic triggered wakening flag = 1), the MS transmits a bandwidth request with respect to a connection belonging to the Power Saving Class, the MS shall continue to transmit on the CQI allocated to it. An MS in sleep mode during the availability interval shall continue to transmit on the CQICH slots allocated to the MS. An example is given in Figure 242.

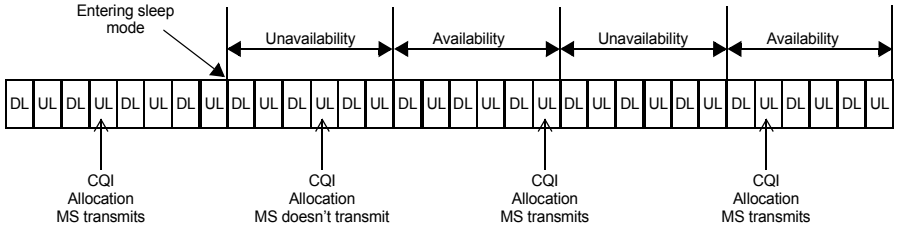

Figure 242—CQI transmissions during sleep mode

While in the scanning interval, an MS may transmit its allocated CQICH slots (see Table 393).

Table 393—CQICH Allocation IE format

Syntax	Size (bit)	Notes
CQICH_Alloc_IE() {	—	—
Extended UIUC	4	CQICH = 0x3
Length	4	Length in bytes (*variable*).
CQICH_ID	*variable*	Index to uniquely identify the CQICH resource assigned to the SS. The size of this field is dependent on system parameter defined in UCD.
Allocation offset	6	Index to the fast feedback channel region marked by UIUC = 0.
Period (p)	2	A CQI feedback is transmitted on the CQICH every 2^p frames.

Table 393—CQICH Allocation IE format *(continued)*

Syntax	Size (bit)	Notes
Frame offset	3	The SS starts reporting at the frame of which the number has the same 3 LSB as the specified frame offset. If the current frame is specified, the SS should start reporting in eight frames. Channel Quality Information reported by a MS in Frame *n* pertains to measurements collected in previous frames up to and including Frame *n*–1, but excluding Frame *n*. The first CQICH report following the CQICH allocation IE may contain invalid CQI data if the CQICH report is sent in the frame immediately following the frame in which the CQICH allocation IE was received.
Duration (d)	3	A CQI feedback is transmitted on the CQI channels for 10×2^d frames. If $d == 0$, the CQI-CH is deallocated. If d == 0b111, the SS should report until the BS command for the SS to stop.
Report configuration included	1	Update to CINR report configuration is included.
If (report configuration included == 1) {	—	—
Feedback Type	2	0b00: Physical CINR feedback 0b01: Effective CINR feedback 0b10–0b11: *Reserved*
Report type	1	0: Report for preamble 1: Report for specific permutation zone
If (Report type == 0) {	—	—
CINR preamble report type	1	The type of preamble-based CINR report 0: Frequency reuse factor = 1 configuration. 1: Frequency reuse factor = 3 configuration.
}	—	—
Else {	—	Report for permutation zone.
Zone permutation	3	The type of zone for which to report 0b000: PUSC with Use All SC = 0 or first DL zone when not all subchannels are used 0b001: PUSC with Use All SC = 1 or first DL zone when all subchannels are used 0b010: FUSC 0b011: Optional FUSC 0b100: Safety channel region 0b101: AMC zone (for DL AAS zone or AMC Zone with dedicated pilots) 0b110–111: *Reserved*
Zone type	2	0b00: Non-STC zone 0b01: STC zone 0b10: AAS zone or Non-STC zone with dedicated pilots 0b11: STC zone with dedicated pilots

Table 393—CQICH Allocation IE format *(continued)*

Syntax	Size (bit)	Notes
Zone PRBS_ID	2	The PRBS_ID of the zone on which to report or the Segment number as indicated by the frame preamble for the first DL Zone or DL AAS zone with Diversity_Map support.
If (Zone permutation== 0b000 or 0b001) {	—	—
Major group indication	1	If 0, then the report may refer to any subchannel in the PUSC zone.
If (Major group indication == 1) {	—	—
PUSC Major group bitmap	6	Reported CINR shall only apply to the subchannels of PUSC major groups for which the corresponding bit is set. Bit *k* refers to major group *k*.
}	—	—
}	—	—
CINR zone measurement type	1	0: Measurement from pilot subcarriers and, if AAS zone, from AAS preamble. 1: Measurement from data subcarriers.
}	—	—
If (feedback type == 0b00) {		Physical CINR feedback
Averaging parameter included	1	—
If (Averaging parameter included == 1) {	—	—
Averaging parameter	4	Averaging parameter α_{avg} used for deriving physical CINR estimates reported through CQICH. This value is given in multiples of 1/16 in the range of [1/16..16/16] in increasing order.
}	—	—
}	—	—
}	—	—

Table 393—CQICH Allocation IE format *(continued)*

Syntax	Size (bit)	Notes
MIMO_permutation_feedback_cycle	2	0b00 = No MIMO and permutation mode feedback 0b01 = The MIMO and permutation mode indication shall be transmitted on the CQICH indexed by the CQICH_ID every four allocated CQICH transmission opportunity. The first indication is sent on the fourth allocated CQICH transmission opportunity. 0b10 = The MIMO mode and permutation mode indication shall be transmitted on the CQICH indexed by the CQICH_ID every eight allocated CQICH transmission opportunity. The first indication is sent on the eighth allocated CQICH transmission opportunity. 0b11 = The MIMO mode and permutation mode indication shall be transmitted on the CQICH indexed by the CQICH_ID every 16 allocated CQICH transmission opportunity. The first indication is sent on the 16th allocated CQICH transmission opportunity.
Padding	*variable*	Number of bits required to align to byte length, shall be set to zero.
}	—	—

CQICH_ID

The CQICH_ID identifies the combination of fast feedback channel, Report Configuration and MIMO Permutation Feedback Cycle created by this IE.

Period(p), Frame offset, and Duration(d)

If the MS received the CQICH_Alloc_IE in frame #N, the MS should transmit periodic reports in every 2^p frames starting from frame #M_{first} to frame #M_{last}, where M_{first} is the first frame number (excluding frame #N) with the 3 LSB equal to the 3 bits in Frame offset and where #$M_{\text{last}} = (\#M_{\text{first}} + 10 \times 2^d - 1) \bmod 2^{24}$.

Report configuration included

Indicates whether an update to the report configuration exists in the IE. A value of 0 indicates that the SS shall use the configuration defined in the last received CQICH_Alloc_IE with the same CQICH_ID.

Report type

Indicates whether the CINR metric shall be reported on the preamble (0) or on a permutation zone (1).

Averaging parameter included

Indicate whether a new averaging parameter α_{avg} for physical CINR reports exists in the IE. A value of 0 indicates that the SS shall perform physical CINR measurements using the last known averaging parameter.

MIMO_permutation_feedback_cycle

This field specifies the MIMO and permutation mode fast-feedback cycle. See 8.4.11.3 for fast-feedback channel payload encoding for MIMO and permutation feedback. When MIMO_permutation_feedback_cycle is not equal to 0b00, the MIMO and permutation mode indication shall transmitted at certain CQICH frames instead of the normal CQI value.

For MIMO-capable SSs, the BS may allocate one or multiple CQICH channels to the SS in UL_MAP. If one CQICH channel is allocated, the SS shall report the average post-processing SNR. If multiple CQICH channels are allocated, the SS shall report post-processing SNR of individual layers, and the order of CQICH channel allocation shall match the order of layer index.

8.4.5.4.12 UL-MAP Physical Modifier IE

For an SS that supports the AAS option (see 8.4.4.7), the Physical Modifier IE indicates that the subsequent allocations shall utilize a preamble, which is either cyclically rotated in frequency or cyclically delayed [see Equation (59) and Equation (60)]. The PHYMOD UL IE can appear anywhere in the UL map, and it shall remain in effect until another PHYMOD UL IE, a Zone-Switch-IE, AAS-UL-IE or SUB-DL-UL-MAP is encountered, or until the end of the UL map. When BS schedules more than one UL transmission for an SS it shall guarantee that the preamble modifier is the same for all UL bursts of the SS (see Table 524).

Table 394—OFDMA UL-MAP Physical Modifier IE format

Syntax	Size (bit)	Notes
PHYMOD_UL_IE() {	—	—
Extended UIUC	4	PHYMOD = 0x5
Length	4	Length = 0x1
Preamble Modifier Type	1	0: Frequency-shifted preamble 1: Time-shifted preamble
if (Preamble Modifier Type == 0) {	—	—
Preamble frequency shift index	4	Indicates the value of *K* in Equation (60)
} else {	—	—
Preamble Time Shift Index	4	Specifies the cyclic time shift in Equation (56): For PUSC, 0 – 0 sample cyclic shift 1 – $N_{FFT}/4$ sample cyclic shift …. 3 – $N_{FFT}/4\times3$ sample cyclic shift 4–15 – *Reserved* For optional PUSC, 0 – 0 sample cyclic shift 1 – $N_{FFT}/3$ sample cyclic shift 2 – $N_{FFT}/3\times2$ sample cyclic shift 3–15 – *Reserved* For AMC permutation, 0 – 0 sample cyclic shift 1 – $N_{FFT}/9$ sample cyclic shift …. 8 – $N_{FFT}/9\times8$ sample cyclic shift 9–15 – *Reserved*
}	—	—
Pilot Pattern Modifier	1	0: Not applied, 1: Applied

Table 394—OFDMA UL-MAP Physical Modifier IE format *(continued)*

Syntax	Size (bit)	Notes
Pilot Pattern Index	2	Pilot pattern used for this allocation [see 8.4.8.1.5 (Figure 263) and 8.4.6.3.3]: 0b00: Pilot pattern A 0b01: Pilot pattern B 0b10: Pilot pattern C 0b11: Pilot pattern D
}	—	—

Preamble Modifier Type
This parameter defines whether the preamble will be cyclically shifted in time or in frequency.

Preamble frequency shift index
This parameter effects the cyclic shift of the preamble in frequency axis, as defined by Equation (60).

Preamble Time Shift Index
This parameter defines how many samples of cyclic shift shall be introduced into the preamble symbols. The unit of cyclic shift depends on the subchannel permutation to ensure the frequency-domain orthogonality between the different preambles in the same subchannel.

8.4.5.4.13 UL Allocation Start IE

The UL Allocation Start IE indicates the start offset of all subsequent UL allocation including allocation done by UL-MAP IE and extended UL-MAP IE. When this IE is included in UL-MAP or SUB-DL-UL-MAP, an SS shall determine all subsequent UL allocations based on the start offset defined in this IE except when the UL allocation already specified a start offset. This IE shall be supported by all SS. (See Table 395.)

If H-FDD UL Subframe Indicator is set to '0', the UL Allocation Start IE indicates the starting offset in the UL subframe (Group) that the UL-MAP including this UL Allocation Start IE is associated with. BS shall not use UL Allocation Start IE with H-FDD UL Subframe Indicator = 1 to an MS without capability of Full-Duplex (FDD), which is negotiated using SBC-REQ/RSP.

For FDD/H-FDD, if the UL Allocation Start IE with H-FDD UL Subframe Indicator = 1 is included in the FDD_Paired_Allocation_IE(), the UL Allocation Start IE indicates the starting offset in the other UL subframe (Group) in the same frame, that is, the starting offset in the other H-FDD UL Group; namely, the one not associated with the UL-MAP in which the current UL Allocation Start IE is included.

Table 395—UL Allocation Start IE format test

Syntax	Size (bit)	Notes
UL_Allocation_Start_IE() {	—	—
Extended UIUC	4	UL_Allocation_Start_IE() = 0xA
Length	4	Length = 0x2

Table 395—UL Allocation Start IE format test *(continued)*

Syntax	Size (bit)	Notes
OFDMA symbol offset	8	This value indicates start symbol offset of all subsequent UL allocations in this UL-MAP message (UL-MAP or SUB-UL-DL-MAP). The reference point of this offset is the start of UL subframe.
Subchannel offset	7	This value indicates start subchannel offset of all subsequent UL data burst allocations in this message (UL-MAP or SUB-UL-DL-MAP).
H-FDD UL subframe indicator	1	Only applies to FDD MS in FDD/H-FDD 0b0: UL subframe relevant to current UL-MAP [or UL subframe 2 (UL1)] 0b1: The other UL subframe [or UL subframe 1 (UL2)] Shall be set to zero for TDD and H-FDD only MS in FDD/H-FDD.
}	—	—

8.4.5.4.14 CQICH Enhanced Allocation IE format

CQICH_Enhanced_Alloc_IE() is introduced to dynamically allocate or deallocate a CQICH to an SS. This IE shall only be used with enhanced fast-feedback channel in 8.4.11.4 and primary/secondary fast-feedback channel in 8.4.11.12. Once allocated, the SS transmit feedback information of the specified type on the assigned CQICH with the determined period, until the SS receives a CQICH_Enhanced_ Alloc_IE() to deallocate the assigned CQICH. (See Table 396.)

Table 396—CQICH Enhanced Allocation IE format

Syntax	Size (bit)	Notes
CQICH_Enhanced_Alloc_IE() {	—	—
Extended-2 UIUC	4	CQICH_Enhance_Alloc_IE() = 0x0
Length	8	Length in bytes of following fields
CQICH_ID	*variable*	Identification of the CQICH reporting processes initiated by this CQICH_Enhanced_Alloc_IE. The size of this field is dependent on system parameter defined in UCD.
Period (=p)	3	A CQI feedback is transmitted on the CQICH every 2^p frames.

Table 396—CQICH Enhanced Allocation IE format *(continued)*

Syntax	Size (bit)	Notes
Frame offset	3	The SS starts reporting at the frame of which the number has the same 3 LSB as the specified frame offset. If the current frame is specified, the SS should start reporting in eight frames. Information reported by an SS in Frame *n* pertains to measurements collected in previous frames up to and including Frame *n*–1, but excluding Frame *n*. The first CQICH report following the CQICH Enhanced allocation IE may contain invalid data if the report is sent in the frame immediately following the frame in which the CQICH Enhanced allocation IE was received.
Duration (=d)	3	A CQI feedback is transmitted on the CQI channels for 10×2^d frames. If *d* == 0b000, the CQICH is deallocated. If *d* == 0b111, the MS should report until the BS command for the MS to stop.
CQICH_Num	4	Number of CQICHs assigned to this CQICH_ID is (CQICH_Num +1)
for (*i* = 0; *i* < CQICH_Num+1; *i*++) {	—	—
Feedback Type	3	0b000–0b010: Fast DL measurement/Default Feedback depending on CQICH types 0b011: Quantized precoding weight feedback 0b100: Index to precoding matrix in codebook 0b101: Channel Matrix Information 0b110: Index to precoding matrix in codebook and Fast DL measurement 0b111: *Reserved*
Allocation index	6	Index to the fast-feedback channel region marked by UIUC = 0
CQICH Type	3	0b000: 6-bit CQI 0b001: 18-bit CQI 0b010: 3-bit CQI (even) 0b011: 3-bit CQI (odd) 0b100: 6-bit CQI (primary) 0b101: 10-bit CQI (primary + secondary) 0b110: 6-bit CQI (even) 0b111: 6-bit CQI (odd)
STTD indication	1	This field is only valid for CQICH Type = 0b000. 0 – CQICH is transmitted using normal 6 bit format 1 – CQICH is transmitted using STTD in PUSC (see Figure 263)
}	—	—

Table 396—CQICH Enhanced Allocation IE format *(continued)*

Syntax	Size (bit)	Notes
Band_AMC_Precoding_Mode	1	0 = One common precoder for all bands (for all allocated bands if the dedicated pilot bit is set to 1). 1 = Distinct precoders for the bands with the highest S/N values (or for the allocated bands if the dedicated pilot bit is set to 1), up to the number of short-term precoders fed back as specified by Nr_Precoders_feedback

If (Band_AMC_Precoding_Mode = 1) {
Nr_Precoders_feedback (= N)
}
	3	Nr of precoders feedback = N

Padding	*variable*	The padding bits are used to ensure the IE size is integer number of bytes.
}	—	—

Feedback Type

For CQICH type = 0b000, 0b001 or 0b100:

0b000 = Fast DL measurement/Default Feedback with antenna grouping
0b001 = Fast DL measurement/Default Feedback with antenna selection
0b010 = Fast DL measurement/Default Feedback with reduced codebook
When the MS transmits the feedback of S/N using 5 LSBs of 6 bits on it assigned CQICH, the MSB is set to 0 (see 8.4.11.5). MS may transmit, on its assigned CQICH, the feedback information specified in 8.4.11.7.

For CQICH type = 0b010 or 0b011:

0b000 = Antenna grouping (see Table 525 of 8.4.11.7)
0b001 = Antenna selection (see Table 526 of 8.4.11.7)
0b010 = Reduced codebook (see Table 527 of 8.4.11.7)

For CQICH type = 0b101:

0b000 = Fast DL measurement (see 8.4.11.1 and 8.4.11.5)
0b001 = Default Feedback with antenna grouping (see Table 518 of 8.4.11.3)
0b010 = Antenna selection and reduced codebook (see Table 519 of 8.4.11.3)
0b011 = Quantized precoding weight feedback (see Figure 297 of 8.4.11.2)

When Feedback type = 0b100 and CQICH type = 0b101, primary CQICH is assigned for index to precoding matrix in codebook while secondary CQICH is assigned for CINR.

When Feedback type = 0b110 and CQICH type = 0b101, 10 bits CQI consists of primary CQICH(6 bits) and Secondary CQICH(4 bits) from MSB to LSB. The first bit of MSB is '0' if MS transmits 6 bit PMI or '1' if MS transmits 3 bit PMI. The remaining 9 bits indicate the below information.

If MS transmits 6 bit PMI, 6 bit PMI + 1 bit differential CINR per band for the 3 best bands (from MSB to LSB).
If MS transmits 3 bit PMI, 3 bit PMI + 1 bit differential CINR per band for the 3 best bands + 3 bits (set to zero) (from MSB to LSB).

When Feedback type = 0b100 and CQICH Type = 0b001 (18 bit CQI), MS feeds back for all 3 bands in the band bitmap in the order of lowest numbered band to highest.

When Feedback type = 0b110 and CQICH Type = 0b001 (18 bit CQI), 2 bands are fed back (Nr_Precoders_feedback = 2). The first group of 6 bits carries the lowest AMC band 6-bit PMI, the second group of 6 bits carries the second AMC band 6-bit PMI, and the third group of 6 bits carries the 2-bit CINR of the 2 AMC band.

For Feedback type = 0b110 (index to precoding matrix in codebook), mapping into each group of 6 bits (CQICH types 0b000, 0b100, 0b110 or 0b111):

3 bit PMI mapped to MSB plus 1 bit RI plus 2 bit differential CINR as LSB

Mapping of the 2 bit differential CINR is as follows:

00	–3 dB
01	–1 dB
10	1 dB
11	3 dB

where

PMI is precoding matrix index
RI is rank information

8.4.5.4.15 UL PUSC Burst Allocation in Other Segment IE

In the UL-MAP, a BS may transmit UIUC = 15 with the UL_PUSC_Burst_Allocation_in_Other_Segment_IE() to define UL bandwidth allocation in other segment. (See Table 397.)

Table 397—UL PUSC Burst Allocation in Other Segment IE

Syntax	Size (bit)	Notes
UL_PUSC_Burst_Allocation_in_Other_Segment_IE() {	—	—
Extended UIUC	4	UL_PUSC_Burst_Allocation_in_Other_Segment_IE() == 0x8
Length	4	Length = 0x5
UIUC	4	—
Segment	2	Segment number for other BSs' sector
UL_Permbase	7	UL Permbase for other BSs' sector
OFDMA symbol offset	8	—
Subchannel offset	6	—
Duration	10	—

Table 397—UL PUSC Burst Allocation in Other Segment IE *(continued)*

Syntax	Size (bit)	Notes
Repetition coding indication	2	0b00: No repetition coding 0b01: Repetition coding of 2 used 0b10: Repetition coding of 4 used 0b11: Repetition coding of 6 used
Reserved	1	Shall be set to zero
}	—	—

8.4.5.4.16 HO Anchor Active UL-MAP IE

This MAP IE is in the UL-MAP of an active non-anchor BS and indicates the burst from the Anchor BS. When an MS receives an HO Anchor Active UL-MAP IE on UL-MAP message from an active non-anchor BS, it can send a data burst to the Anchor BS by using the anchor preamble in HO Anchor Active UL-MAP IE. (See Table 398.)

Table 398—HO Anchor Active UL-MAP IE

Syntax	Size (bit)	Notes
HO_Anchor_Active_UL-MAP_IE() {	—	—
Extended-2 UIUC	4	HO_Anchor_Active_UL-MAP_IE() = 0x1
Length	8	—
for (each bursts) {	—	—
Anchor Preamble	16	Preamble of anchor BS
Anchor CID	16	Basic CID in anchor BS
Start subchannel offset	12	—
UIUC	4	—
Duration	10	—
Repetition coding indication	2	0b00: No repetition coding 0b01: Repetition coding of 2 used 0b10: Repetition coding of 4 used 0b11: Repetition coding of 6 used
}	—	—
padding nibble	0 or 4	Shall be set to zero
}	—	—

8.4.5.4.17 HO Active Anchor UL MAP IE

This MAP IE is in the UL-MAP of the anchor BS and indicates the burst from active non-anchor BS. When an MS receives an HO Active Anchor UL-MAP IE on UL-MAP message from an anchor BS, it can send a data burst to the active non-anchor BS by using the active preamble in HO Active Anchor UL-MAP IE. (See Table 399.)

Table 399—HO Active Anchor UL-MAP IE

Syntax	Size (bit)	Notes
HO_Active_Anchor_UL-MAP_IE() {	—	—
Extended-2 UIUC	4	HO_Active_Anchor_UL-MAP_IE() = 0x2
Length	8	—
for (each bursts) {	—	—
Active Preamble	16	Preamble of active BS
Anchor CID	16	Basic CID in anchor BS
Start subchannel offset	12	—
UIUC	4	—
Duration	10	—
Repetition coding indication	2	0b00: No repetition coding 0b01: Repetition coding of 2 used 0b10: Repetition coding of 4 used 0b11: Repetition coding of 6 used
}	—	—
padding nibble	0 or 4	Shall be set to zero
}	—	—

8.4.5.4.18 MIMO UL Enhanced IE format

In the UL-MAP, a MIMO-enabled BS may transmit MIMO_UL_Enhanced_IE() to indicate the MIMO configuration and pilot patterns of the subsequent UL allocation to a specific MIMO-enabled MS CID. The MIMO mode indicated in the MIMO_UL_Basic_IE() shall only apply to the UL allocation within the IE. (See Table 400.)

Table 400—MIMO UL Enhanced IE format

Syntax	Size (bit)	Notes
MIMO_UL_Enhanced_IE() {	—	—
Extended-2 UIUC	4	MIMO_UL_Enhanced_IE() = 0x6
Length	8	Length in bytes

Table 400—MIMO UL Enhanced IE format *(continued)*

Syntax	Size (bit)	Notes
Num_Assign	4	Number of burst assignment. "Number of assigned bursts" is this field value plus 1
for (j = 0; j < Number of assigned bursts; j++){	—	—
Num_CID	2	—
for (i = 0; i < Num_CID; i++){	—	—
CID	16	MS basic CID
UIUC	4	—
Repetition coding indication	2	0b00: No repetition coding 0b01: Repetition coding of 2 used 0b10: Repetition coding of 4 used 0b11: Repetition coding of 6 used
Matrix_Indicator	1	For MS with dual antenna 0: Matrix A (STTD, see 8.4.8.4.3) 1: Matrix B (SM, see 8.4.8.4.3) For MS with single antenna, skip this field
Pilot Pattern Indicator	1	For MS with single antenna 0: Pilot pattern A 1: Pilot pattern B For MS with dual antenna (for PUSC only) 0: Pilot pattern A/B 1: Pilot pattern C/D
}	—	—
Duration	10	In OFDMA slots (see 8.4.3.1)
}	—	—
Padding	*variable*	Shall be set to zero
}	—	—

Num_Assign
A field that specifies the number of assignments in this IE. The actual number of assigned bursts is this field value plus 1.

Matrix_Indicator
A field that specifies the MIMO mode of UL burst. For MS with dual antenna it indicates STC Matrix and for MS with single antenna it is skipped.

Pilot Pattern Indicator
A field that indicates pilot patterns to MS with single antenna or to MS with dual antenna (see 8.4.8.1.5).

8.4.5.4.19 OFDMA Fast Ranging IE format

A Fast Ranging IE may be placed in the UL-MAP message by a BS to provide a non-contention-based initial ranging opportunity. The Fast Ranging IE shall be placed in the extended UIUC within a UL-MAP IE.

The format of the IE is PHY dependent as shown in Table 401.

Table 401—OFDMA Fast Ranging IE format

Syntax	Size (bit)	Notes
Fast_Ranging_IE() {	—	—
Extended UIUC	4	Fast_Ranging_IE() = 0x9
Length	4	—
HO ID indicator	1	0: MAC Address is present 1: HO ID is present
Reserved	7	Shall be set to zero
if (HO ID indicator == 1) {	—	—
HO ID	8	—
} else {	—	—
MAC address	48	MS MAC address as provided on the RNG-REQ message on initial system entry
}	—	—
UIUC	4	UIUC ≠ 15. A four-bit code used to define the type of UL access and the burst type associated with that access
Duration	10	In OFDMA slots (see 8.4.3.1)
Repetition coding indication	2	0b00: No repetition coding 0b01: Repetition coding of 2 used 0b10: Repetition coding of 4 used 0b11: Repetition coding of 6 used
}	—	—

UIUC
UIUC used for the burst.

Duration
Indicates the duration, in units of OFDMA slots, of the allocation.

Repetition coding indication
Indicates the repetition code used inside the allocated burst.

HO ID indicator
An indicator to indicate whether HO ID or MAC Address is being used to identify an MS during HO.

HO ID
An identifier assigned to an MS for use during initial ranging to the selected target BS.

8.4.5.4.20 UL-MAP Fast Tracking IE

In the UL-MAP, a BS may transmit UIUC = 15 with the UL-MAP_Fast_Tracking_IE() to provide fast power, time and frequency indications/corrections to MSs that have transmitted in the frame before the previous frame.

The CID used in the IE shall be a Broadcast CID. (See Table 402.)

Table 402—UL-MAP Fast Tracking IE format

Syntax	Size (bit)	Notes
UL-MAP_Fast_Tracking_IE() {	—	—
extended UIUC	4	UL-MAP_Fast_Tracking_IE() = 0x7
Length	4	*Variable*
Map Index	2	Index of SUB-DL-UL-MAP to which this IE refers, or zero if this IE refers to the mandatory UL-MAP. Shall be set to zero.
Reserved	6	Shall be set to zero.
for (i = 1; i <= n; i++) {	—	For each Fast Indication bytes 1 to n (n = Length)
Power correction	3	Power correction indication: 0b000: no change 0b001: +2 dB 0b010: –1 dB 0b011: –2 dB 0b100: –4 dB 0b101: –6 dB 0b110: +4 dB 0b111: +6 dB
Frequency correction	3	The correction is 0.1% of the carrier spacing multiplied by the 3-bit number interpreted as a signed integer (i.e., 0b100: –4; … 0b000: 0; … 0b011: 3)
Time correction	2	The correction is floor(2 / F_S) multiplied by: 0b00: 0 0b01: 1 0b10: –1 0b11: *Reserved*
}	—	—
}	—	—

The UL Fast Tracking IE is an optional field in the UL-MAP. When this IE is sent it provides an indication about corrections that should be applied by MSs that have transmitted in the frame before the previous UL frame. Each Indication byte shall correspond to one unicast allocation-IE or sub-IE that has specified an allocation of an UL transmission in the UL-MAP transmitted 2 frames before the previous frame. The order of the indication bytes shall be the same as the order of the unicast allocation IE in the UL-MAP.

The response time for corrections following receipt of this IE shall be equal to Ranging Response Processing Time as defined in 10.1.

8.4.5.4.21 Anchor BS Switch IE

The Anchor BS Switch IE may be sent by a BS to indicate to one or more MS(s) to switch to a new specified Anchor BS at specific action time, or to cancel the switch. The Anchor BS Switch IE can also be used to allocate CQICH at the new Anchor BS. (See Table 403.)

Table 403—Anchor BS Switch IE format

Syntax	Size (bit)	Notes
Anchor_BS_Switch_IE() {	—	—
Extended UIUC2	4	Anchor_BS_Switch_IE() = 0x3
Length	8	Length in bytes
N_Anchor_BS_switch	4	Number of Anchor BS switching indicated in this IE
for (*i* = 0; *i* < N_Anchor_BS_switch; *i*++) {	—	—
Reduced CID	12	LSB 12 bits of basic CID of an MS whose anchor BS switching is indicated in this IE
Action code	2	0b00 – The MS shall switch to the Anchor BS specified in the fast Anchor BS selection information in the fast-feedback channel, at the default time specified by the switching period defined in the DCD. 0b01 – The MS shall switch to the Anchor BS specified in this IE and at the action time specified in this IE. 0b10 – The MS shall cancel all anchor switching procedure, stop switching timer and remain on the current anchor BS. 0b11 – *Reserved*
If (Action code == 01) {	—	—
Action time (A)	3	In units of frames. 0b000 means the MS shall switch at the default time specified by the switching period defined in the DCD.
TEMP_BS_ID	3	TEMP_BS_ID of the anchor BS to switch to. (TEMP_BS_ID is the assigned ID to the BS when it was added to the diversity set of an MS).
Reserved	2	—
}	—	—
If (Action code == 00 || Action code == 01) {	—	—
AK Change Indicator	1	To indicate whether the AK being used should change when switching to a new Anchor BS. If set to 0, the MS should continue to use the AK currently in use. If set to 1, the MS should use the AK derived for use with the new Anchor BS.
CQICH Allocation Indicator	1	To indicate if CQICH allocation at the new Anchor BS is included in this IE.

Table 403—Anchor BS Switch IE format *(continued)*

Syntax	Size (bit)	Notes
If (CQICH_Allocation_Indicator == 1) {	—	—
CQICH_ID	*variable*	Index to uniquely identify he CQICH resource assigned to the MS after the MS switched to the new anchor BS.
Feedback channel offset	6	Index to the fast-feedback channel region of the new Anchor BS marked by UIUC = 0.
Period (=p)	2	A CQI feedback is transmitted on the CQICH every 2^p frames.
Frame offset	3	The MS starts reporting at the frame of which the number has the same 3 LSB as the specified frame offset. If the current frame is specified, the MS should start reporting in eight frames.
Duration (=d)	3	A CQI feedback is transmitted on the CQI channels indexed by the CQICH_ID for 10×2^d frames. If d == 0b000, the CQI-CH is deallocated. If d == 0b111, the MS should report until the BS command for the MS to stop.
MIMO_permutation_feedback_cycle	2	0b00 = No MIMO and permutation mode feedback 0b01 = the MIMO and permutation mode indication shall be transmitted on the CQICH indexed by the CQICH_ID every 4 allocated CQICH transmission opportunity. The first indication is sent on the 4th allocated CQICH transmission opportunity. 0b10 = the MIMO mode and permultation mode indication shall be transmitted on the CQICH indexed by the CQICH_ID every 8 allocated CQICH transmission opportunity. The first indication is sent on the 8th allocated CQICH transmission opportunity. 0b11 = the MIMO mode and permultation mode indication shall be transmitted on the CQICH indexed by the CQICH_ID every 16 allocated CQICH transmission opportunity. The first indication is sent on the 16th CQICH allocated CQICH transmission opportunity.
Reserved	*variable*	Number of bits required to align to byte boundary from CQICH Allocation Indicator bit field to the end of this field. This value shall be set to zero.
}	—	—
}else{	—	—
Reserved	2	—
}	—	—

Table 403—Anchor BS Switch IE format *(continued)*

Syntax	Size (bit)	Notes
}	—	—
Reserved	4	—
}	—	—

8.4.5.4.22 HARQ UL-MAP IE

The following modes of HARQ shall be supported by the HARQ UL-MAP IE:

a) Chase combining HARQ for all FEC types (HARQ Chase). In this mode, the burst profile is indicated by a UIUC.
b) Incremental redundancy HARQ for CTC (HARQ IR). In this mode, the burst profile is indicated by the parameters N_{EP}, N_{SCH}.
c) Incremental redundancy HARQ for convolutional code (HARQ CC-IR).

The IE may also be used to indicate a non-HARQ transmission when ACK disable=1.

The HARQ UL MAP IE defines one or more bursts. Each burst is separately encoded.

When Allocation Start Indication is 1, the HARQ UL-MAP IE indicates the starting symbol and subchannel of the allocation. The starting symbol and subchannel shall indicate a valid slot location after the last allocation in the uplink zone in the UL subframe. The slots are allocated in a time-first order (as specified in 8.4.5.4). The starting symbol and subchannel are relevant only in the context of the HARQ UL-MAP IE in which they appear. Allocations made without the starting symbol and subchannel of the allocations specified (such as HARQ UL-MAP IE with Allocation Start Indication 0, or regular UL-MAP IE) shall immediately follow the last allocation in the uplink zone and shall advance in the time axis. (See Table 404 through Table 408.)

For FDD/H-FDD, if the HARQ UL-MAP IE with H-FDD UL Subframe Indicator = 1 is included in the FDD_Paired_Allocation_IE(), the “OFDMA Symbol Offset” and “Subchannel Offset” fields in HARQ UL-MAP IE indicates the starting symbol and subchannel of the allocation in the other UL subframe (Group) in the same frame, that is, the UL Group different from that the UL-MAP including the current HARQ UL-MAP IE is associated with.

If H-FDD UL Subframe Indicator is set to '0', the HARQ UL-MAP IE indicates the starting symbol and subchannel of the allocation in the UL subframe (Group) that the UL-MAP including this HARQ UL-MAP IE is associated with. BS shall not use UL Allocation Start Indication = 1 with H-FDD UL Subframe Indicator=1 to an MS without capability of Full-Duplex (FDD), which is negotiated using SBC-REQ/RSP.

Table 404—HARQ UL-MAP IE

Syntax	Size (bit)	Notes
HARQ_UL-MAP_IE() {	—	—
Extended-2 UIUC	4	HARQ_UL-MAP_IE() = 0x07
Length	8	Length in bytes
RCID_Type	2	0b00: Normal CID 0b01: RCID11 0b10: RCID7 0b11: RCID3
Reserved	2	—
while (data remains) {	—	—
Mode	3	Indicates the mode of this IE: 0b000: Chase HARQ 0b001: Incremental redundancy HARQ for CTC 0b010: Incremental redundancy HARQ for convolutional code 0b011: MIMO Chase HARQ 0b100: MIMO IR HARQ 0b101: MIMO IR HARQ for convolutional code 0b110: MIMO STC HARQ 0b111: *Reserved*
Allocation Start Indication	1	0: No allocation start information 1: Allocation start information follows
If (Allocation Start Indication == 1) {	—	—
OFDMA Symbol offset	8	This value indicates start Symbol offset of subsequent subbursts in this HARQ ULMAP IE with reference to the start of the UL subframe
Subchannel offset	7	This value indicates start Subchannel offset of subsequent subbursts in this HARQUL MAP IE
H-FDD UL subframe indicator	1	Only applies to FDD MS in FDD/H-FDD 0b0: UL subframe relevant to current UL-MAP [or UL subframe 2 (UL1)] 0b1: The other UL subframe [or UL subframe 1 (UL2)] Shall be set to zero for TDD and H-FDD only MS in FDD/H-FDD
}	—	—
N subbursts	4	Number of subbursts in this HARQ UL MAP IE is this field value plus 1
For (i = 0; i < Number of subbursts; i++){	—	—

Table 404—HARQ UL-MAP IE *(continued)*

Syntax	Size (bit)	Notes
If (Mode == 000) {	—	—
UL HARQ Chase subburst IE ()	—	—
} else if (Mode == 001) {	—	—
UL HARQ IR CTC subburst IE ()	—	—
} else if (Mode == 010) {	—	—
UL HARQ IR CC subburst IE ()	—	—
} else if (Mode == 011) {	—	—
MIMO UL Chase HARQ subburst IE ()	—	—
} else if (Mode == 100) {	—	—
MIMO UL IR HARQ subburst IE ()	—	—
} else if (Mode == 101) {	—	—
MIMO UL IR HARQ for CC subburst IE ()	—	—
} else if (Mode == 110) {	—	—
MIMO UL STC HARQ subburst IE ()	—	—
}	—	—
}	—	—
}	—	—
Padding	*variable*	Padding to byte; shall be set to 0
}	—	—

Table 405—UL HARQ Chase Subburst IE format

Syntax	Size (bit)	Notes
HARQ Chase UL subburst IE {	—	—
RCID IE()	*variable*	—
Dedicated UL Control Indicator	1 bit	—
If (Dedicated UL Control Indicator ==1) {	—	—
Dedicated UL Control IE ()	*variable*	—
}	—	—
UIUC	4	—
Repetition Coding Indication	2	0b00: No repetition coding 0b01: Repetition coding of 2 used 0b10: Repetition coding of 4 used 0b11: Repetition coding of 6 used

Table 405—UL HARQ Chase Subburst IE format *(continued)*

Syntax	Size (bit)	Notes
Duration	10	—
ACID	4	—
AI_SN	1	—
ACK disable	1	When ACK Disable == 1, the allocated subburst does not require an ACK to be transmitted by the BS in the HARQ ACK BITMAP (see 8.4.5.3.22). In this case, no bit position is allocated for the subburst in the HARQ ACK BITMAP. For TDD SS, for the burst, MS shall not perform HARQ retransmission and ignore ACID, AI_SN and SPID, which shall be set to 0 by BS if they exist. For FDD SS, the BS may set the ACID to a value other than 0 if that ACID is listed in the Aggregated HARQ Channels TLV. The CRC shall be appended at the end of each subburst regardless of the ACK disable bit.
Reserved	1	—
}	—	—

Table 406—UL HARQ IR CTC Subburst IE format

Syntax	Size (bit)	Notes
HARQ_IR_CTC_UL_subburst_IE() {	—	—
RCID IE()	*variable*	—
Dedicated UL Control Indicator	1	—
If (Dedicated UL Control Indicator == 1) {	—	—
Dedicated UL Control IE ()	*variable*	—
}	—	—
N_{EP}	4	—
N_{SCH}	4	—
SPID	2	—
ACID	4	—
AI_SN	1	—

Table 406—UL HARQ IR CTC Subburst IE format *(continued)*

Syntax	Size (bit)	Notes
ACK disable	1	When ACK Disable == 1, the allocated subburst does not require an ACK to be transmitted by the BS in the HARQ ACK BITMAP (see 8.4.5.3.22). In this case, no bit position is allocated for the subburst in the HARQ ACK BITMAP. For TDD SS, for the burst, MS shall not perform HARQ retransmission and ignore ACID, AI_SN and SPID, which shall be set to 0 by BS if they exist. For FDD SS, the BS may set the ACID to a value other than 0 if that ACID is listed in the Aggregated HARQ Channels TLV. The CRC shall be appended at the end of each subburst regardless of the ACK disable bit.
Reserved	3	—
}	—	—

Table 407—UL HARQ IR CC Subburst IE format

Syntax	Size (bit)	Notes
HARQ_IR_CC_UL_subburst_IE() {	—	—
RCID IE()	*variable*	—
Dedicated UL Control Indicator	1	—
If (Dedicated UL Control Indicator == 1) {	—	—
Dedicated UL Control IE ()	*variable*	—
}	—	—
UIUC	4	—
Repetition Coding Information	2	0b00: No repetition coding 0b01: Repetition coding of 2 used 0b10: Repetition coding of 4 used 0b11: Repetition coding of 6 used
Duration	10	—
SPID	2	—
ACID	4	—
AI_SN	1	—

Table 407—UL HARQ IR CC Subburst IE format *(continued)*

Syntax	Size (bit)	Notes
ACK disable	1	When ACK Disable == 1, the allocated subburst does not require an ACK to be transmitted by the BS in the HARQ ACK BITMAP (see 8.4.5.3.22). In this case, no bit position is allocated for the subburst in the HARQ ACK BITMAP. For TDD SS, for the burst, MS shall not perform HARQ retransmission and ignore ACID, AI_SN and SPID, which shall be set to 0 by BS if they exist. For FDD SS, the BS may set the ACID to a value other than 0 if that ACID is listed in the Aggregated HARQ Channels TLV. The CRC shall be appended at the end of each subburst regardless of the ACK disable bit.
Reserved	3	—
}	—	—

Table 408—MIMO UL Chase HARQ Subburst IE format

Syntax	Size (bit)	Notes
MIMO_UL_Chase_HARQ_subburst_IE() {	—	—
MU Indicator	1	Indicates whether this UL burst is intended for multiple SS.
Dedicated MIMO UL Control Indicator	1	—
ACK Disable	1	When ACK Disable == 1, the allocated subburst does not require an ACK to be transmitted by the BS in the HARQ ACK BITMAP (see 8.4.5.3.22). In this case, no bit position is allocated for the subburst in the HARQ ACK BITMAP. For TDD SS, for the burst, MS shall not perform HARQ retransmission and ignore ACID, AI_SN and SPID, which shall be set to 0 by BS if they exist. For FDD SS, the BS may set the ACID to a value other than 0 if that ACID is listed in the Aggregated HARQ Channels TLV. The CRC shall be appended at the end of each subburst regardless of the ACK disable bit.
if (MU indicator == 0) {	—	—
RCID IE()	*variable*	—
If (Dedicated MIMO UL Control Indicator == 1) {	—	—
Dedicated MIMO UL Control IE ()	*variable*	—
}	—	—
} else {	—	—

Table 408—MIMO UL Chase HARQ Subburst IE format *(continued)*

Syntax	Size (bit)	Notes
Matrix	1	Indicates transmission matrix (see 8.4.8) for MS with dual Tx antennas 0 = Matrix A 1 = Matrix B Ignored by MS with single Tx antenna
}	—	—
Duration	10	—
For (*i* = 0; *i* < N_layer; *i*++) {	—	N_layer = 2 when MU Indicator is set to 1. Otherwise, its value shall be delivered in Dedicated MIMO UL Control IE().
if (MU indicator == 1) {	—	—
RCID IE()	*variable*	—
}	—	—
UIUC	4	—
Repetition Coding Indication	2	0b00: No repetition coding 0b01: Repetition coding of 2 used 0b10: Repetition coding of 4 used 0b11: Repetition coding of 6 used
If (ACK Disable == 0) {	—	—
ACID	4	—
AI_SN	1	—
}	—	—
}	—	—
}	—	—

When an MS receives a MIMO HARQ burst allocation with Dedicated MIMO UL Control Indicator set to 1, the MS shall store the information in Dedicated MIMO UL Control IE. When an MS receives a MIMO HARQ burst allocation with Dedicated MIMO UL Control Indicator is set to 0, the MS shall use the stored Dedicated MIMO UL Control information from the last burst allocation where this information was included.

For MIMO HARQ allocation specified in the MIMO UL Chase HARQ Subburst IE, MIMO UL IR HARQ Subburst IE, or the MIMO UL IR HARQ for CC Subburst IE, each layer shall be allocated its associated bit position in the ACK channel bitmap. The number of bits in the ACK channel bitmap associated with the subburst IE may be greater than N_sub_burst.

For each single MS subburst (MU indicator = 0) matrix and layer information shall be read from Dedicated MIMO UL Control IE, if set by the indicator bit, and be applied to the burst accordingly. For each multiple-SS subburst (MU Indicator = 1), N_layer for this subburst shall be set to 2 and the first SS with the first RCID shall use the pilot pattern A for single antenna MS or the pilot pattern A/B for dual antenna MS in 8.4.8.1.5 and the first UIUC; whereas, the second MS with the second RCID shall use the pilot pattern B for

single antenna MS or the pilot pattern C/D for dual antenna MS and the second UIUC. (See Table 409, Table 410, and Table 411.)

Table 409—MIMO UL IR HARQ Subburst IE format

Syntax	Size (bit)	Notes
MIMO_UL_IR_HARQ_subburst_IE() {	—	—
MU Indicator	1	Indicates whether this UL burst is intended for multiple SSs
Dedicated MIMO UL Control Indicator	1	—
ACK Disable	1	When ACK Disable == 1, the allocated subburst does not require an ACK to be transmitted by the BS in the HARQ ACK BITMAP (see 8.4.5.3.22). In this case, no bit position is allocated for the subburst in the HARQ ACK BITMAP. For TDD SS, for the burst, MS shall not perform HARQ retransmission and ignore ACID, AI_SN and SPID, which shall be set to 0 by BS if they exist. For FDD SS, the BS may set the ACID to a value other than 0 if that ACID is listed in the Aggregated HARQ Channels TLV. The CRC shall be appended at the end of each subburst regardless of the ACK disable bit.
if (MU indicator == 0) {	—	—
RCID IE()	*variable*	—
If (Dedicated MIMO UL Control Indicator == 1) {	—	—
Dedicated MIMO UL Control IE ()	*variable*	—
}	—	—
} else {	—	—
Matrix	1	Indicates transmission matrix (see 8.4.8) for MS with dual Tx antennas 0 = Matrix A 1 = Matrix B Ignored by MS with single Tx antenna
}	—	—
$\mathbf{N_{SCH}}$	4	—
For (i = 0; i < N_layer; i++) {	—	—
if (MU indicator == 1) {	—	—
RCID IE()	*variable*	—
}	—	—
$\mathbf{N_{EP}}$	4	—
If (ACK Disable == 0) {	—	—

Table 409—MIMO UL IR HARQ Subburst IE format *(continued)*

Syntax	Size (bit)	Notes
SPID	2	—
ACID	4	—
AI_SN	1	—
}	—	—
}	—	—
}	—	—

Table 410—MIMO UL IR HARQ for CC Subburst IE format

Syntax	Size (bit)	Notes
MIMO UL IR HARQ for CC subburst IE{	—	—
MU Indicator	1	Indicates whether this UL burst is intended for multiple SS
Dedicated MIMO UL Control Indicator	1	—
ACK Disable	1	When ACK Disable == 1, the allocated subburst does not require an ACK to be transmitted by the BS in the HARQ ACK BITMAP (see 8.4.5.3.22). In this case, no bit position is allocated for the subburst in the HARQ ACK BITMAP. For TDD SS, for the burst, MS shall not perform HARQ retransmission and ignore ACID, AI_SN and SPID, which shall be set to 0 by BS if they exist. For FDD SS, the BS may set the ACID to a value other than 0 if that ACID is listed in the Aggregated HARQ Channels TLV. The CRC shall be appended at the end of each subburst regardless of the ACK disable bit.
if (MU indicator == 0) {	—	—
RCID IE()	*variable*	—
If (Dedicated MIMO UL Control Indicator == 1) {	—	—
Dedicated MIMO UL Control IE ()	*variable*	—
}	—	—
} else {	—	—

Table 410—MIMO UL IR HARQ for CC Subburst IE format *(continued)*

Syntax	Size (bit)	Notes
Matrix	1	Indicates transmission matrix (see 8.4.8) for MS with dual Tx antennas 0 = Matrix A 1 = Matrix B Ignored by MS with single Tx antenna
}	—	—
Duration	10	—
For (*i* = 0; *i* < N_layer; *i*++) {	—	—
if (MU indicator == 1) {	—	—
RCID IE()	*variable*	—
}	—	—
UIUC	4	—
Repetition Coding Indication	2	0b00 – No repetition coding 0b01 – Repetition coding of 2 used 0b10 – Repetition coding of 4 used 0b11 – Repetition coding of 6 used
If (ACK Disable == 0) {	—	—
ACID	4	—
AI_SN	1	—
SPID	2	—
}	—	—
}	—	—
}	—	—

Table 411—MIMO UL STC HARQ Subburst IE format

Syntax	Size (bit)	Notes
MIMO_UL_STC_HARQ_subburst_IE() {	—	—
Tx count	2	0b00: Initial transmission 0b01: Odd retransmission 0b10: Even retransmission 0b11: *Reserved*
Duration	10	—
Subburst offset indication	1	Indicates the inclusion of subburst offset
Reserved	—	Shall be set to zero

Table 411—MIMO UL STC HARQ Subburst IE format *(continued)*

Syntax	Size (bit)	Notes
If (Subburst offset indication == 1) {	—	—
Subburst offset	8	Offset in slots with respect to the previous subburst defined in this data region. If this is the first subburst within the data region, this offset is with respect to slot 0 of the data region.
}	—	—
RCID_IE()	*variable*	—
ACK Disable	1	When ACK Disable == 1, the allocated subburst does not require an ACK to be transmitted by the BS in the HARQ ACK BITMAP (see 8.4.5.3.22). In this case, no bit position is allocated for the subburst in the HARQ ACK BITMAP. For TDD SS, for the burst, MS shall not perform HARQ retransmission and ignore ACID, AI_SN and SPID, which shall be set to 0 by BS if they exist. For FDD SS, the BS may set the ACID to a value other than 0 if that ACID is listed in the Aggregated HARQ Channels TLV. The CRC shall be appended at the end of each subburst regardless of the ACK disable bit.
If (Tx count == 00) {	—	—
UIUC	4	—
Repetition Coding Information	2	0b00 – No repetition coding 0b01 – Repetition coding of 2 used 0b10 – Repetition coding of 4 used 0b11 – Repetition coding of 6 used
}	—	—
If (ACK Disable == 0) {	—	—
ACID	4	—
}	—	—
}	—	—

8.4.5.4.22.1 Dedicated UL Control IE

The format for the Dedicated UL Control IE is shown in Table 412.

Table 412—Dedicated UL Control IE format

Syntax	Size (bit)	Notes
Dedicated_UL_Control_IE() {	—	—
Length	4	Length of following control information in Nibble.
Control header	4	Bit 0: SDMA Control Info Bit 1–3: *Reserved*
If(SDMA Control Info Bit == 1){	—	—
Num SDMA layers	2	This value plus one indicates the total number of SDMA layers associated with the HARQ UL MAP IE
Pilot pattern	2	0b00: Pattern A 0b01: Pattern B 0b10: Pattern C 0b11: Pattern D
}	—	—
}	—	—

Length
A field that indicates the following control information.

Control Information
Variable size control information.

SDMA control information
The Dedicated UL Control IE with SDMA Control Info = 1 shall be present within the first subburst allocation of each layer of SDMA allocations. When the SDMA control info is present, the OFDMA Symbol offset and Subchannel offset shall be reset to the Start OFDMA Symbol offset and Start Subchannel offset of the HARQ UL MAP IE. The specified pilot pattern for PUSC (see 8.4.8.1.5) or for AMC (see 8.4.8.4.1) is used for all subburst allocations until the next occurrence of SDMA Control Info or until the end of the current HARQ UL MAP IE. The information specified in this SDMA control info is first applied to the same subburst allocation that contains the Dedicated UL Control IE.

8.4.5.4.22.2 Dedicated MIMO UL Control IE format

Dedicated MIMO UL Control IE contains additional control information for each subburst. (See Table 413.)

Table 413—Dedicated MIMO UL Control IE format

Syntax	Size (bit)	Notes
Dedicated_MIMO_UL_Control_IE() {	—	—
Matrix	2	Indicates transmission matrix (see 8.4.8) 0b00: Matrix A (Tx Diversity) 0b01: Matrix B (Spatial Multiplexing) 0b10–0b11: *Reserved*
N_layer	2	Number of coding/modulation layers 0b00: 1 layer 0b01: 2 layers 0b10–0b11: *Reserved*
}	—	—

8.4.5.4.23 HARQ ACK Region Allocation IE

This IE may be used by the BS to define a UL region to include one or more ACK channel(s) for HARQ supporting MS. The IE format is shown in Table 414. The slots in the ACKCH region are divided into two half-slots. The first half-slot is composed of tiles 0,2,4; the second half-slot is composed of tiles 1,3,5. In the ACKCH Region, ACK channel 2n is the first half of slot n; ACK channel ($2n$+1) is the second half of slot n. The slot number n is increased first along the subchannel axis until the end of the ACKCH region, and then along the time axis.

The HARQ-enabled MS that receives HARQ DL burst at frame i should transmit the ACK signal through the ACK channel in the ACKCH region at frame (i+j). The frame offset j is defined by the "HARQ ACK Delay for DL Burst" field in the UCD message. Due to different frame numbering, an H-FDD user in Group 2 shall transmit the ACK signal through the ACK channel in the ACKCH region at frame (i+j+1).

The half-subchannel offset in the ACKCH Region is determined by the order of HARQ-enabled DL burst in the DL MAP. For example, when an MS receives a HARQ-enabled burst at frame i, and the burst is the n-th HARQ-enabled burst among the HARQ related IEs, the MS should transmit HARQ ACK at n-th half-subchannel in ACKCH Region that is allocated by the BS at frame (i+j).

For TDD mode, at most one ACK region per frame may be defined. For FDD/H-FDD mode, at most two ACK regions per frame may be defined (by using up to two HARQ ACK Region Allocation IE-s or TLV-s). If more than one ACK region is defined, the index of the ACK region associated with each burst is specified in a HARQ DL MAP IE and/or a OFDMA SUB-DL-UL-MAP message. The MS accumulates the ACKCH index separately for each ACK region.

Each SS should specify support of "UL ACK" channel (see 11.8.3.5.11).

When the ACK Disable bit is set (in DL HARQ IR CTC Subburst IE format), no ACK channel is allocated for the subburst. (See Table 414.)

Table 414—HARQ ACKCH Region Allocation IE

Syntax	Size (bit)	Notes
HARQ_ACKCH_Region_IE() {	—	—
Extended-2 UIUC	4	HARQ_ACKCH_Region_IE() = 0x8
Length	8	Length in bytes = 0x3
OFDMA Symbol offset	8	—
Subchannel offset	7	—
No. OFDMA symbols	5	—
No. subchannels	4	—
}	—	—

OFDMA Symbol offset
Subchannel offset
No. OFDMA Symbols
No. Subchannels
Specify the start symbol offset, the start subchannel offset, the number of allocated symbols, and the number of subchannels for the HARQ acknowledgement region respectively.

HARQ ACK Region Allocation IE may override fast-feedback region. This means that when the HARQ ACK Region Allocation IE indicates the same region that is allocated for CQICH, then the region shall be used for HARQ ACK region. In the case that the Fast-feedback region is overridden by an HARQ ACK region, the whole HARQ ACK region shall reside within the Fast-feedback region. The BS and MS shall treat the overridden part of the Fast-feedback region as an HARQ ACK region. The original CQICH allocation offsets remain unchanged. When allocating Fast-feedback slots, the BS shall skip the slots in the overridden region.

8.4.5.4.24 UL Sounding Command IE

UL Sounding Command IE is defined in Table 464 (in 8.4.6.2.7.1).

8.4.5.4.25 AAS SDMA UL IE format

The format for AAS SDMA UL IE is shown in Table 415.

Table 415—AAS SDMA UL IE format

Syntax	Size (bit)	Notes
AAS_SDMA_UL_IE() {	—	—
Extended-2 UIUC	4	AAS_SDMA_UL_IE() = 0xE

Table 415—AAS SDMA UL IE format *(continued)*

Syntax	Size (bit)	Notes
Length	8	*variable*
RCID_Type	2	0b00: Normal CID 0b01: RCID11 0b10: RCID7 0b11: RCID3
Num Burst Region	4	—
Reserved	2	Shall be set to zero
For (ii = 1: Num Region) {	—	—
Slot offset	12	Starting slot offset in AAS zone referenced to right after UL AAS preamble
Slot duration	10	—
Number of Users	3	SDMA users for the assigned region
Reserved	3	Shall be set to zero
For (jj = 1: Num_Users) {	—	—
RCID_IE()	*variable*	—
Encoding Mode	2	0b00: No HARQ 0b01: HARQ Chase Combining 0b10: HARQ Incremental Redundancy 0b11: HARQ Conv. Code Incremental Redundancy
Power Adjust	1	0: Not Included 1: Included; Signed integer in 0.25 dB Unit
Pilot Pattern Modifier	1	0: Not Applied 1: Applied
If (AAS UL Preamble Used) {	—	—
Preamble Modifier Index	4	Preamble Modifier Index
}	—	—
If (Pilot Pattern Modifier) {	—	Pilots per beam
Pilot Pattern	2	See 8.4.8.1.5 (Figure 263) and 8.4.6.3.3 0b00: Pattern #A 0b01: Pattern #B 0b10: Pattern #C 0b11: Pattern #D
Reserved	2	Shall be set to zero
}	—	—
If (Encoding Mode == 0b00) {	—	—
DIUC	4	—
Repetition Coding Indication	2	0b00: No repetition 0b01: Repetition of 2 0b10: Repetition of 4 0b11: Repetition of 6

Table 415—AAS SDMA UL IE format *(continued)*

Syntax	Size (bit)	Notes
Reserved	2	Shall be set to zero
}	—	—
If (Encoding Mode == 0b01) {	—	HARQ Chase Combining
DIUC	4	—
Repetition Coding Indication	2	0b00: No repetition 0b01: Repetition of 2 0b10: Repetition of 4 0b11: Repetition of 6
ACID	4	—
AI_SN	1	—
Reserved	1	Shall be set to zero
}	—	—
If (Encoding Mode == 0b10) {	—	—
$\mathbf{N_{EP}}$	4	—
$\mathbf{N_{SCH}}$	4	Indicator for the number of first slots used for data encoding in this SDMA allocation region
SPID	2	—
ACID	4	—
AI_SN	1	—
Reserved	1	Shall be set to zero
}	—	—
If (Encoding Mode == 0b11) {	—	HARQ Conv. Code Incremental Redundancy
DIUC	4	—
Repetition Coding Indication	2	0b00: No repetition 0b01: Repetition of 2 0b10: Repetition of 4 0b11: Repetition of 6
SPID	2	—
ACID	4	—
AI_SN	1	—
Reserved	3	Shall be set to zero
}	—	—
If (Power Adjust Included) {	—	—
Power adjustment	8	Signed integer in 0.25 dB Unit
}	—	—
}	—	End of User loop

Table 415—AAS SDMA UL IE format *(continued)*

Syntax	Size (bit)	Notes
}	—	End of Burst Region Loop
Padding	*variable*	Shall be set to zero
}	—	—

8.4.5.4.26 Feedback Polling IE

This IE may be used by BS to schedule feedback header transmission by the MS. When the Dedicated UL Allocation bit is set to 1, a dedicated UL allocation shall be included in this IE. The dedicated UL allocation shall be used by the MS to transmit feedback header at the designated feedback header transmission frame defined by this IE. When the Dedicated UL Allocation bit is set to 0, no dedicated UL allocation shall be included. Instead, at the designated transmission frame defined by this IE, the MS shall compose the feedback header and the BS shall include a dedicated UL allocation for the transmission using normal UL MAP IE. (See Table 416).

Table 416—Feedback Polling IE format

Syntax	Size (bit)	Notes
Feedback_Polling_IE() {	—	—
Extended-2 UIUC	4	Feedback Polling IE() = 0xF
Length	8	Length in bytes of following fields
Num_Allocations	4	"Number of allocated feedback channels" is this field value plus 1
Dedicated UL Allocation Included	1	0: No dedicated UL resource is allocated in this feedback polling IE. BS shall provide UL allocation for the feedback header transmission through UL-MAP at each designated transmitting frame defined by this IE 1: Dedicated UL resource is included
Reserved	3	Shall be set to zero
for (i = 0; i < Number of allocated feedback channels; i++) {	—	—
Basic CID	16	—
Allocation Duration (d)	3	The allocation is valid for $4^{(d-1)}$ frame starting from the frame defined by Frame_offset If d == 0b000, the prescheduled feedback header transmission is released If d == 0b111, the prescheduled feedback header transmission shall be valid until the BS commands to release it
If (d != 0b000) {	—	—
Feedback type	4	See Table 17. The MS can override the feedback type by sending the feedback header with report type specifying the feedback type

Table 416—Feedback Polling IE format *(continued)*

Syntax	Size (bit)	Notes
Frame Offset	3	The offset (in units of frames) from the current frame in which the first UL feedback header shall be transmitted on the allocated UL resource. The start value of frame offset shall be 1
Period (p)	2	The UL resource region is dedicated to the MS in every 2^p frame
If (Dedicated UL Allocation Included == 1) {	—	—
UIUC	4	—
OFDMA symbol offset	8	—
Subchannel offset	7	—
Duration	3	In OFDMA Slots
Repetition coding indication	2	0b00 – No repetition coding 0b01 – Repetition coding of 2 used 0b10 – Repetition coding of 4 used 0b11 – Repetition coding of 6 used
}	—	—
}	—	—
}	—	—
Padding bits	*variable*	To align octet boundary
}	—	—

Feedback type
See Table 17.

Duration
In OFDMA slots (see 8.4.3.1).

Period (p)
The UL resource region is dedicated to an MS in every 2^p frame.

Dedicated UL Allocation
0: No dedicated UL resource is allocated in feedback polling IE. BS shall provide UL allocation for the feedback header transmission at each designated transmitting frame defined by this IE.
1: Dedicated UL resource is included.

OFDMA symbol offset
The offset of OFDMA symbol in which the burst starts, measured in OFDMA symbols from beginning of the designated transmission UL frame for feedback header.

Subchannel offset
The lowest index OFDMA subchannel used for carrying the burst, starting from subchannel 0.

Allocation Duration (d)
The allocation is valid for $4^{(d-1)}$ frame starting from the frame defined by Frame offset
If d == 0b000, the dedicated allocation is deallocated.
If d == 0b111, the dedicated resource shall be valid until the BS commands to deallocate the dedicated allocation.

8.4.5.4.27 Uplink Power Control Bitmap IE

This IE defines uplink power control correction bitmaps (UL_PC_Bitmap_IE). The value in the Power Control Bitmap is the change that MS applies to its transmit power by changing the offset value. (See Table 417).

Table 417—UL_PC_Bitmap IE format

Syntax	Size (bit)	Notes
UL_PC_Bitmap_IE() {	—	—
Extended-2 UIUC	4	Uplink Power Control Bitmap IE() = 0xB
Length	8	Length in bytes of following fields
CQICH based Power Correction Included	1	0: CQICH based power correction is not included 1: CQICH based power correction is included
Data burst based Power Correction Included	1	0: Data burst based power correction is not included 1: Data burst based power correction is included
If (CQICH based Power Correction Included == 1) {	—	—
CQICH Power Control Bitmap	*variable*	It is the sequence of C power control commands with (Bq+1) bits each. The i-th power control command is a power adjustment to the MS that transmitted the i-th CQICH on CQICH region in the (N – Frame_offset_CQICH)-th frame. N is the frame number of the current frame carrying this UL_PC_Bitmap_IE. No. PC command bits (Bq) and Frame_offset_CQICH are sent in UCD. C is the total number of CQICHs in CQICH region in frame N – Frame_offset_CQICH. Depending on 'Bq', (Bq+1) bits power control command shall be interpreted as follows: B=0x00: 1 bit, '0':–0.5dB, '1':+0.5dB; B=0x01: 2 bits, '00':–0.5dB, '01': 0dB, '10':+0.5dB, '11':+1.0dB B=0x02: 3 bits, '000':–1.5dB ~ '111':+2.0dB, step size=0.5dB B=0x03: 4 bits, '0000':–3.5dB ~'1111':+4.0dB, step size=0.5dB
}	—	—
If (Data burst based Power Correction Included == 1) {	—	—
No. of PC commands (D)	1	No. of PC commands in Data Burst Power Control

Table 417—UL_PC_Bitmap IE format *(continued)*

Syntax	Size (bit)	Notes
Data Burst Power Control Bitmap	*variable*	It is the sequence of D power control commands with (Bd+1) bits each. The i-th power control command is a power adjustment to the MS that transmitted a burst in the frame (N-Frame_offset_Data) and the burst is the i-th allocation made by the UL MAP in the frame (N-Frame_offset_Data-1). No. PC command bits (Bd) and Frame_offset_Data are sent in UCD. Depending on 'Bd', (Bd+1) bits power control command shall be interpreted as follows: B=0x00: 1 bit, '0':–0.5dB, '1':+0.5dB; B=0x01: 2 bits, '00':–0.5dB, '01': 0dB, '10':+0.5dB, '11':+1.0dB B=0x02: 3 bits, '000':–1.5dB ~ '111':+2.0dB, step size=0.5dB B=0x03: 4 bits, '0000':–3.5dB ~'1111':+4.0dB, step size=0.5dB
}	—	—
Padding bits	*variable*	To align octet boundary
}	—	—

8.4.5.4.28 Persistent HARQ UL MAP Allocation IE

Uplink persistent allocations are used by the base station to make uplink time-frequency resource assignments which repeat periodically. The logical time-frequency resource assigned using the Persistent HARQ UL MAP IE repeats at a periodic interval. Uplink persistent allocations are not compatible with the HARQ ACK bitmap.

The Persistent HARQ UL MAP IE may be used for non persistent allocations by setting the persistent flag in the subburst IE to 0.

Table 418—Persistent HARQ UL MAP IE format

Syntax	Size (bit)	Notes
Persistent HARQ_UL-MAP_IE() {	—	—
Extended 2- UIUC	4	Persistent HARQ_UL-MAP_IE() = 0xC
Length	8	Length of the IE
RCID Type	2	0b00: Normal CID 0b01: RCID11 0b10: RCID7 0b11: RCID3
Reserved	1	—
while(data remains){	—	—

Table 418—Persistent HARQ UL MAP IE format *(continued)*

Syntax	Size (bit)	Notes
Mode	3	Indicates the mode of this IE: 0b000: Persistent UL Chase HARQ 0b001: Persistent UL Incremental redundancy HARQ for CTC 0b010: Persistent UL Incremental redundancy HARQ for convolutional code 0b011: Persistent MIMO UL Chase HARQ 0b100: Persistent MIMO UL IR HARQ 0b101: Persistent MIMO UL IR HARQ for convolutional code 0b110: Persistent MIMO UL STC HARQ 0b111: *Reserved*
Allocation Start Indication	1	0: No allocation start information 1: Allocation start information follows
if(Allocation Start Indication ==1) {	—	—
OFDMA Symbol offset	8	This value indicates start symbol offset of subsequent sub-bursts in this Persistent HARQ UL MAP IE with reference to the start of the UL subframe.
Subchannel offset	7	This value indicates start Subchannel offset of subsequent subbursts in this Persistent HARQ UL MAP IE.
Reserved	1	Shall be set to zero.
}	—	—
N subbursts	4	Number of changed subbursts in this Persistent HARQ UL MAP IE is this field value plus 1.
Resource Shifting Indicator	1	0 = No Resource Shifting 1 = Resource Shifting
Persistent Region ID	5	
Change Indicator	1	0: No Change Occurred 1: Change Occurred
for(i = 0; i < Number of changed subburst; i++) {	—	—
If (mode == 000) {	—	—
Persistent UL HARQ Chase subburst IE ()	—	—
} else if (mode == 001) {	—	—
Persistent UL HARQ IR CTC subburst IE ()	—	—
} else if (mode == 010) {	—	—
Persistent UL HARQ IR CC subburst IE ()	—	—
} else if (mode == 011) {	—	—

Table 418—Persistent HARQ UL MAP IE format *(continued)*

Syntax	Size (bit)	Notes
Persistent MIMO UL Chase HARQ subburst IE ()	—	—
} else if (mode == 100) {	—	—
Persistent MIMO UL IR HARQ subburst IE ()	—	—
} else if (mode == 101) {	—	—
Persistent MIMO UL IR HARQ for CC subburst IE ()	—	—
} else if (mode == 110) {	—	—
Persistent MIMO UL STC HARQ subburst IE ()	—	—
}	—	—
}	—	—
}	—	—
Padding bits	*variable*	To align octet boundary
}	—	—

Resource Shifting Indicator

If the resource shifting indicator is set to 1, the MS shall shift its persistent resource position by the accumulated slots as indicated by de-allocation commands with slot offsets smaller than its own.

Persistent Region ID

The identifier of specific Persistent HARQ region. The operation commanded by the IE is applied to subbursts in the region.

Change Indicator

The change indicator can be set to 0 or 1. It is used by MSs to decide if they can resume using their UL persistent allocations. See 6.3.26.4.5 for details.

Table 419—Persistent UL HARQ Chase Subburst IE format

Syntax	Size (bit)	Notes
Persistent UL HARQ Chase subburst IE{	—	—
Allocation Flag	1	1 = allocate 0 = de-allocate

Table 419—Persistent UL HARQ Chase Subburst IE format *(continued)*

Syntax	Size (bit)	Notes
Group Indicator	1	TDD mode: *Reserved*, set to 0. Used for FDD/H-FDD case only; to indicate the group assignment of the MS (see 8.4.4.2 and 8.4.4.2.1) 0b0: Group #1 0b1: Group #2
If (Allocation Flag == 0) {	—	—
RCID_IE()	*variable*	—
MAP ACK Channel Index	6	Index to a MAP ACK channel within the Fast Feedback region. When MAP ACK Channel Index = 0b111111, it indicates NO MAP ACK channel is assigned to this de-allocation.
if (Resource Shifting Indicator ==1) {	—	—
Duration	*variable*	Duration in slots. OFDMA Frame duration dependant 7 bits – 2.5 ms frame 8 bits – 5 ms frame 9 bits – 10 ms frame 10 bits – 20 ms frame
Slot Offset	*variable*	Indicates the start of this persistent allocation in OFDMA slots, with respect to the start of the UL subframe if an allocation start indication is not included in this IE and with respect to OFDM symbol offset and subchannel offset if an allocation start indication is included in this IE OFDMA Frame duration dependant 7 bits – 2.5 ms frame 8 bits – 5 ms frame 9 bits – 10 ms frame 10 bits – 20 ms frame
Retransmission Flag	1	0: Deallocation command in Relevant Frame 1: Retransmission of deallocation command in Allocation Period
}	—	—
}	—	—
If (Allocation Flag == 1) {	—	—
RCID_IE()	*variable*	—
Persistent Flag	1	0 = non-persistent 1 = persistent
Duration Indicator	1	If Duration Indicator is 1, it indicates that Duration is explicitly assigned for this subburst. Otherwise, this subburst shall use the same Duration as the previous subburst. If *j* is 0 then this indicator shall be 1.
if (Duration Indicator == 1) {	—	—

Table 419—Persistent UL HARQ Chase Subburst IE format *(continued)*

Syntax	Size (bit)	Notes
Duration	*variable*	Duration in slots. OFDMA Frame duration dependant 7 bits – 2.5 ms frame 8 bits – 5 ms frame 9 bits – 10 ms frame 10 bits – 20 ms frame
}	—	—
Slot Offset	*variable*	Indicates the start of this persistent allocation in OFDMA slots, with respect to the start of the UL subframe if an allocation start indication is not included in this IE and with respect to OFDM symbol offset and subchannel offset if an allocation start indication is included in this IE. OFDMA Frame duration dependant 7 bits – 2.5 ms frame 8 bits – 5 ms frame 9 bits – 10 ms frame 10 bits – 20 ms frame
if (Persistent Flag == 1) {	—	—
Allocation Period and N_ACID Indicator	1	If Allocation Period and N_ACID Indicator is 1, it indicates that allocation information (allocation period, Number of ACID (N_ACID) is explicitly assigned for this subburst. Otherwise, this subburst shall use the same allocation period as the previous subburst. If *j* is 0 then this indicator shall be 1.
if (Allocation Period and N_ACID Indicator == 1) {	—	—
Allocation Period (ap)	5	Period of the persistent allocation is this field value plus 1 (unit is frame).
Number of ACID (N_ACID)	3	Number of HARQ channels associated with this persistent assignment is this field value plus 1.
}	—	—
MAP NACK Channel Index	6	Index to a shared MAP NACK channel within the Fast Feedback region. When MAP NACK Channel Index = 0b111111, it indicates NO MAP NACK channel is assigned to this allocation.
MAP ACK Channel Index	6	Index to a MAP ACK channel within the Fast Feedback region.
}	—	—
Dedicated UL Control Indicator	1	—
If (Dedicated UL Control Indicator ==1) {	—	—
Dedicated UL Control IE ()	*variable*	—
}	—	—
UIUC	4	—

Table 419—Persistent UL HARQ Chase Subburst IE format *(continued)*

Syntax	Size (bit)	Notes
Repetition Coding Indication	1	0b00: No Repetition coding 0b01: Repetition coding of 2 used 0b10: Repetition coding of 4 used 0b11: Repetition coding of 6 used
ACID	4	Initial value of HARQ channel identifier.
AI_SN	1	Initial AI_SN for each ACID.
ACK Disable	1	When ACK Disable == 1, the allocated subburst does not require an ACK to be transmitted by the BS in the HARQ ACK BITMAP (see 8.4.5.3.22). In this case, no bit position is allocated for the subburst in the HARQ ACK BITMAP. For TDD SS, for the burst, MS shall not perform HARQ retransmission and ignore ACID, AI_SN and SPID, which shall be set to 0 by BS if they exist. For FDD SS, the BS may set the ACID to a value other than 0 if that ACID is listed in the Aggregated HARQ Channels TLV. The CRC shall be appended at the end of each subburst regardless of the ACK disable bit.
}	—	—
Padding	*variable*	Padding to nibble; shall be set to 0.
}	—	—

Allocation flag

The allocation flag shall be set to 1 if the subburst IE is allocating time-frequency resources and shall be set to 0 if the subburst IE is de-allocating resources.

Retransmission Flag

The Retransmission Flag shall be set to 0 if the de-allocation occurs in *K*, where *K* is the relevant frame and shall be set to 1 if the de-allocation occurred in frame *K – allocation period*. The MS, who correctly received the UL-MAP in the frame relevant to frame *K – allocation period*, shall ignore the deallocation command with Retransmission Flag equal to 1. The MS, who failed to receive the UL-MAP in the frame relevant to frame *K – allocation period*, shall process the deallocation command with Retransmission Flag equal to 1.

The BS is allowed to retransmit de-allocation commands with the retransmission flag not set. This may cause the MS to receive a duplicated de-allocation command. The MS shall ignore a de-allocation command for which it does not have a corresponding persistent resource allocation.

Persistent Flag

The persistent flag shall be set to 1 if the assignment is persistent and shall be set to 0 if the assignment is non-persistent.

Slot Offset

The slot offset shall be set to the first slot in the time-frequency resource assignment. The slot offset is defined with respect to the lowest numbered slot of the UL subframe if an allocation start indication is not included in this IE, and the slot offset is defined with respect to the indicated OFDM symbol offset and subchannel offset if an allocation start indication is included in this IE.

Allocation Period

The allocation period value shall be set to (*ap*–1) where ap is the period of the persistent allocation, in units of frames.

N_ACID

The values of ACID field (N0) and N_ACID field (N) are used together to specify an implicit cycling of HARQ channel identifiers as follows. N0 is used as the HARQ channel identifier corresponding to the first occurrence of the persistent allocation. For each next allocation this value is incremented modulo (N + 1)

MAP NACK Channel Index

The MAP NACK channel index is persistently allocated within the Fast Feedback region. The mobile station shall use the indicated MAP NACK channel to report MAP decoding error in frames where it has a persistent resource allocation assigned. When MAP NACK Channel Index = 0b111111, it indicates NO MAP NACK channel is assigned to this allocation.

MAP ACK Channel Index

The MAP ACK channel is allocated non-persistently within the Fast Feedback region. The mobile station shall use the indicated MAP ACK channel to report successful receipt of the persistent allocation IE. If the allocation flag is set to 0, when MAP ACK Channel Index = 0b111111, it indicates NO MAP ACK channel is assigned to this deallocation.

ACID

The ACID field shall be set to the initial value of HARQ channel identifier as described above.

AI_SN

The AI_SN field value shall be set to the initial ARQ identifier sequence number for each HARQ channel. The AI_SN toggles between 0 and 1 for each particular HARQ channel. For example, if the period equals 4 frames, N_ACID = 0b011, ACID = 2, and AI_SN = 0, the ACID follows the pattern 2, 3, 4, 5, 2, 3, 4, 5, etc, and the AI_SN follows the pattern 0, 0, 0, 0, 1, 1, 1, 1, etc.

Table 420—Persistent UL HARQ IR CTC Subburst IE format

Syntax	Size (bit)	Notes
Persistent UL HARQ IR CTC subburst IE {	—	—
Allocation Flag	1	1 = allocate 0 = de-allocate
Group Indicator	1	TDD mode: *Reserved*, set to 0. Used for FDD/H-FDD case only; to indicate the group assignment of the MS (see 8.4.4.2 and 8.4.4.2.1) 0b0: Group #1 0b1: Group #2
If (Allocation Flag == 0) {	—	—
RCID_IE()	*variable*	—
MAP ACK Channel Index	6	Index to a MAP ACK channel within the Fast Feedback region. When MAP ACK Channel Index = 0b111111, it indicates NO MAP ACK channel is assigned to this de-allocation.
if (Resource Shifting Indicator ==1) {	—	—
$\mathbf{N_{EP}}$	4	—
$\mathbf{N_{SCH}}$	4	—

Table 420—Persistent UL HARQ IR CTC Subburst IE format *(continued)*

Syntax	Size (bit)	Notes
Slot Offset	*variable*	Indicates the start of this persistent allocation in OFDMA slots, with respect to the start of the UL subframe if an allocation start indication is not included in this IE and with respect to OFDM symbol offset and subchannel offset if an allocation start indication is included in this IE 7 bits – 2.5 ms frame 8 bits – 5 ms frame 9 bits – 10 ms frame 10 bits – 20 ms frame
Retransmission Flag	1	0: Deallocation command in Relevant Frame 1: Retransmission of deallocation command in Allocation Period
}	—	—
}	—	—
if (Allocation Flag == 1) {	—	—
RCID_IE()	*variable*	—
Persistent Flag	1	0 = non-persistent 1 = persistent
Slot Offset	*variable*	Indicates the start of this persistent allocation in OFDMA slots, with respect to the start of the UL subframe if an allocation start indication is not included in this IE and with respect to OFDM symbol offset and subchannel offset if an allocation start indication is included in this IE 7 bits – 2.5 ms frame 8 bits – 5 ms frame 9 bits – 10 ms frame 10 bits – 20 ms frame
if (Persistent Flag == 1) {	—	—
Allocation Period and N_ACID Indicator	1	If Allocation Period and N_ACID Indicator is 1, it indicates that allocation information (allocation period, Number of ACID (N_ACID) is explicitly assigned for this subburst. Otherwise, this subburst shall use the same allocation period as the previous subburst. If *j* is 0 then this indicator shall be 1.
if (Allocation Period and N_ACID Indicator == 1) {	—	—
Allocation Period (ap)	5	Period of the persistent allocation is this field value plus 1 (unit is frame)
Number of ACID (N_ACID)	3	Number of HARQ channels associated with this persistent assignment is this field value plus 1
}	—	—
MAP NACK Channel Index	6	Index to a shared MAP NACK channel within the Fast Feedback region. When MAP NACK Channel Index = 0b111111, it indicates NO MAP NACK channel is assigned to this allocation

Table 420—Persistent UL HARQ IR CTC Subburst IE format *(continued)*

Syntax	Size (bit)	Notes
MAP ACK Channel Index	6	Index to a MAP ACK channel within the Fast Feedback region.
}	—	—
Dedicated UL Control Indicator	1	—
if (Dedicated UL Control Indicator ==1) {	—	—
Dedicated UL Control IE ()	*variable*	
}	—	—
Duration Indicator	1	If Duration Indicator is 1, it indicates that Duration is explicitly assigned for this subburst. Otherwise, this subburst shall use the same Duration as the previous subburst. If *j* is 0 then this indicator shall be 1.
if (Duration Indicator == 1) {	—	—
$\mathbf{N_{EP}}$	4	—
$\mathbf{N_{SCH}}$	4	—
}	—	—
SPID	2	—
ACID	4	Initial value of HARQ channel identifier
AI_SN	1	Initial AI_SN for each ACID
ACK Disable	1	When ACK Disable == 1, the allocated subburst does not require an ACK to be transmitted by the BS in the HARQ ACK BITMAP (see 8.4.5.3.22). In this case, no bit position is allocated for the subburst in the HARQ ACK BITMAP. For TDD SS, for the burst, MS shall not perform HARQ retransmission and ignore ACID, AI_SN and SPID, which shall be set to 0 by BS if they exist. For FDD SS, the BS may set the ACID to a value other than 0 if that ACID is listed in the Aggregated HARQ Channels TLV. The CRC shall be appended at the end of each subburst regardless of the ACK disable bit.
}	—	—
Padding	*variable*	Padding to nibble; shall be set to 0
}	—	—

SPID

Defines subpacket identifier, which is used to identify the four subpackets generated from an encoder packet. The SPID field only applies to FEC modes supporting incremental redundancy. The SPID numbering shall follow the rules for subpacket generation of 6.3.16.1 Subpacket generation.

Table 421—Persistent UL HARQ IR CC Subburst IE format

Syntax	Size (bit)	Notes
Persistent UL HARQ IR CC subburst IE {	—	—
Allocation Flag	1	1 = allocate 0 = de-allocate
Group Indicator	1	TDD mode: *Reserved*, set to 0. Used for FDD/H-FDD case only; to indicate the group assignment of the MS (see 8.4.4.2 and 8.4.4.2.1) 0b0: Group #1 0b1: Group #2
If (Allocation Flag == 0) {	—	—
RCID_IE()	*variable*	—
MAP ACK Channel Index	6	Index to a MAP ACK channel within the Fast Feedback region. When MAP ACK Channel Index = 0b111111, it indicates NO MAP ACK channel is assigned to this de-allocation.
if (Resource Shifting Indicator ==1) {	—	—
Duration	*variable*	Duration in slots. OFDMA Frame duration dependant 7 bits – 2.5 ms frame 8 bits – 5 ms frame 9 bits – 10 ms frame 10 bits – 20 ms frame
Slot Offset	*variable*	Indicates the start of this persistent allocation in OFDMA slots, with respect to the start of the UL subframe if an allocation start indication is not included in this IE and with respect to OFDM symbol offset and subchannel offset if an allocation start indication is included in this IE OFDMA Frame duration dependant 7 bits – 2.5 ms frame 8 bits – 5 ms frame 9 bits – 10 ms frame 10 bits – 20 ms frame
Retransmission Flag	1	0: Deallocation command in Relevant Frame 1: Retransmission of deallocation command in Allocation Period
}	—	—
}	—	—
if (Allocation Flag == 1) {	—	—
RCID_IE()	*variable*	—
Persistent Flag	1	0 = non-persistent 1 = persistent

Table 421—Persistent UL HARQ IR CC Subburst IE format *(continued)*

Syntax	Size (bit)	Notes
Duration Indicator	1	If Duration Indicator is 1, it indicates that Duration is explicitly assigned for this subburst. Otherwise, this subburst shall use the same Duration as the previous subburst. If *j* is 0 then this indicator shall be 1.
if (Duration Indicator == 1) {	—	—
Duration	*variable*	Duration in slots. OFDMA Frame duration dependant 7 bits – 2.5 ms frame 8 bits – 5 ms frame 9 bits – 10 ms frame 10 bits – 20 ms frame
}	—	—
Slot Offset	*variable*	Indicates the start of this persistent allocation in OFDMA slots, with respect to the start of the UL subframe if an allocation start indication is not included in this IE and with respect to OFDM symbol offset and subchannel offset if an allocation start indication is included in this IE. OFDMA Frame duration dependant 7 bits – 2.5 ms frame 8 bits – 5 ms frame 9 bits – 10 ms frame 10 bits – 20 ms frame
if (Persistent Flag == 1) {	—	—
Allocation Period and N_ACID Indicator	1	If Allocation Period and N_ACID Indicator is 1, it indicates that allocation information (allocation period, Number of ACID (N_ACID) is explicitly assigned for this subburst. Otherwise, this subburst shall use the same allocation period as the previous subburst. If *j* is 0 then this indicator shall be 1.
if (Allocation Period and N_ACID Indicator == 1) {	—	—
Allocation Period (ap)	5	Period of the persistent allocation is this field value plus 1 (unit is frame).
Number of ACID (N_ACID)	3	Number of HARQ channels associated with this persistent assignment is this field value plus 1.
}	—	—
MAP NACK Channel Index	6	Index to a shared MAP NACK channel within the Fast Feedback region. When MAP NACK Channel Index = 0b111111, it indicates NO MAP NACK channel is assigned to this allocation.
MAP ACK Channel Index	6	Index to a MAP ACK channel within the Fast Feedback region.
}	—	—
Dedicated UL Control Indicator	1	—

Table 421—Persistent UL HARQ IR CC Subburst IE format *(continued)*

Syntax	Size (bit)	Notes
if (Dedicated UL Control Indicator ==1) {	—	—
Dedicated UL Control IE ()	*variable*	—
}	—	—
UIUC	4	—
Repetition Coding Indication	1	0b00: No Repetition coding 0b01: Repetition coding of 2 used 0b10: Repetition coding of 4 used 0b11: Repetition coding of 6 used
SPID	4	—
ACID	4	Initial value of HARQ channel identifier.
AI_SN	1	Initial AI_SN for each ACID.
ACK Disable	1	When ACK Disable == 1, the allocated subburst does not require an ACK to be transmitted by the BS in the HARQ ACK BITMAP (see 8.4.5.3.22). In this case, no bit position is allocated for the subburst in the HARQ ACK BITMAP. For TDD SS, for the burst, MS shall not perform HARQ retransmission and ignore ACID, AI_SN and SPID, which shall be set to 0 by BS if they exist. For FDD SS, the BS may set the ACID to a value other than 0 if that ACID is listed in the Aggregated HARQ Channels TLV. The CRC shall be appended at the end of each subburst regardless of the ACK disable bit.
}	—	—
Padding	*variable*	Padding to nibble; shall be set to 0.
}	—	—

Table 422—Persistent MIMO UL Chase HARQ Subburst IE format

Syntax	Size (bit)	Notes
Persistent_MIMO_UL_Chase_HARQ_subburst_IE() {		
MU Indicator	1	Indicates whether this UL burst is intended for multiple MS 0 = Single MS 1 = multiple MS
Allocation Flag	1	1 = allocate 0 = de-allocate

Table 422—Persistent MIMO UL Chase HARQ Subburst IE format *(continued)*

Syntax	Size (bit)	Notes
Dedicated MIMO UL Control Indicator	1	0 == MS shall use the stored Dedicated MIMO UL Control information from the last burst allocation where this information was included. 1 = MS uses the Dedicated MIMO UL control information is this IE
if (MU Indicator == 0) {		
Group Indicator	1	TDD mode: *Reserved*, set to 0. Used for FDD/H-FDD case only; to indicate the group assignment of the MS (see 8.4.4.2 and 8.4.4.2.1) 0b0: Group #1 0b1: Group #2
if (Allocation flag == 0) {		
RCID IE()	*variable*	—
if (Resource Shifting Indicator== 1) {	—	—
Duration	*variable*	Duration in slots. OFDMA Frame duration dependant 7 bits – 2.5 ms frame 8 bits – 5 ms frame 9 bits – 10 ms frame 10 bits – 20 ms frame
Slot Offset	*variable*	Indicates the start of this persistent allocation in OFDMA slots, with respect to the lowest numbered OFDM symbol and the lowest numbered subchannel in the HARQ region. OFDMA Frame duration dependant 7 bits – 2.5 ms frame 8 bits – 5 ms frame 9 bits – 10 ms frame 10 bits – 20 ms frame
Retransmission Flag	1	0: Deallocation command in Relevant Frame 1: Retransmission of deallocation command in Relevant Frame – Allocation Period.
}	—	—
}	—	—
if (Allocation Flag == 1) {	—	—
RCID_IE()	*variable*	—
if (Dedicated MIMO UL Control indicator == 1) {	—	—
Dedicated MIMO UL Control IE ()	*variable*	—
}	—	—
Persistent Flag	1	0 = non-persistent allocation 1 = persistent allocation

Table 422—Persistent MIMO UL Chase HARQ Subburst IE format *(continued)*

Syntax	Size (bit)	Notes
Duration Indicator	1	If Duration Indicator is 1, it indicates that Duration is explicitly assigned for this subburst. Otherwise, this subburst shall use the same Duration as the previous subburst. If *j* is 0 then this indicator shall be 1.
if (Duration Indicator == 1) {	—	—
Duration	*variable*	See definition above in this IE
}	—	—
Slot Offset	*variable*	See definition above in this IE
ACK Disable	1	When ACK Disable == 1, the allocated subburst does not require an ACK to be transmitted by the BS in the HARQ ACK BITMAP (see 8.4.5.3.22). In this case, no bit position is allocated for the subburst in the HARQ ACK BITMAP. For TDD SS, for the burst, MS shall not perform HARQ retransmission and ignore ACID, AI_SN and SPID, which shall be set to 0 by BS if they exist. For FDD SS, the BS may set the ACID to a value other than 0 if that ACID is listed in the Aggregated HARQ Channels TLV. The CRC shall be appended at the end of each subburst regardless of the ACK disable bit.
if (persistent flag ==1){	—	—
Allocation Period and N_ACID Indicator	1	If Allocation Period and N_ACID Indicator is 1, it indicates that allocation information (allocation period, Number of ACID (N_ACID) is explicitly assigned for this subburst. Otherwise, this subburst shall use the same allocation period as the previous subburst. If *j* is 0 then this indicator shall be 1.
if (Allocation Period and N_ACID Indicator == 1) {	—	—
Allocation Period	5	Period of the persistent allocation is this field value plus 1 (unit is frame).
Number of ACID (N_ACID)	3	Number of HARQ channels associated with this persistent assignment is this field value plus 1.
}	—	—
MAP ACK Channel Index	6	Index to a MAP ACK channel within the Fast Feedback region.
MAP NACK Channel Index	6	Index to a shared MAP NACK channel within the Fast Feedback region. When MAP NACK Channel Index = 0b111111, it indicates NO MAP NACK channel is assigned to this allocation.
}	—	—
for (*i* = 0; *i* < N_Layers; *i*++) {	—	—
UIUC	4	—

Table 422—Persistent MIMO UL Chase HARQ Subburst IE format *(continued)*

Syntax	Size (bit)	Notes
Repetition Coding Indication	2	0b00: No Repetition coding 0b01: Repetition coding of 2 used 0b10: Repetition coding of 4 used 0b11: Repetition coding of 6 used
ACID	4	Initial value of HARQ channel identifier
AI_SN	1	Initial AI_SN for each ACID
}	—	—
}	—	—
}	—	—
if (MU Indicator == 1) {	—	—
if (Dedicated MIMO UL Control indicator == 1) {	—	—
Dedicated MIMO UL Control IE ()	*variable*	—
}	—	—
Layer Relevance Bitmap	4	4 bit bitmap indicating if layer processing should be skipped in the subsequent 'for loop'. The bit position indicates the layer. The bit value: 0 = skip the layer; 1 = process the layer
for (i = 0; i < N_Layers; i++) {	—	For each instance of the for-loop, when the corresponding bit in the Layer Relevance Bitmap is set to 0, the subsequent fields within this instance of for-loop are omitted.
if (Allocation flag == 0) {	—	De-allocate
RCID IE ()	*variable*	—
if (Resource Shifting Indicator == 1) {	—	—
Slot Offset	*variable*	See definition above in this IE
Duration	*variable*	See definition above in this IE
Retransmission Flag	1	0: Deallocation command in Relevant Frame 1: Retransmission of deallocation command in Relevant Frame – Allocation Period
}	—	—
}	—	—
if (Allocation Flag == 1) {	—	—
RCID IE ()	*variable*	—
Persistent flag	1	—
Slot Offset	*variable*	See definition above in this IE

Table 422—Persistent MIMO UL Chase HARQ Subburst IE format *(continued)*

Syntax	Size (bit)	Notes
Duration Indicator	1	If Duration Indicator is 1, it indicates that Duration is explicitly assigned for this subburst. Otherwise, this subburst shall use the same Duration as the previous subburst. If *j* is 0 then this indicator shall be 1.
if (Duration Indicator == 1) {	—	—
Duration	*variable*	See definition above in this IE
}	—	—
ACK Disable	1	See definition above in this IE
UIUC	4	—
Repetition Coding Indication	2	See definition above in this IE
ACID	4	—
AI_SN	1	—
if (Persistent Flag == 1) {	—	—
Allocation Period and N_ACID Indicator	1	If Allocation Period and N_ACID Indicator is 1, it indicates that allocation information (allocation period, Number of ACID (N_ACID) is explicitly assigned for this subburst. Otherwise, this subburst shall use the same allocation period as the previous subburst. If *j* is 0 then this indicator shall be 1.
if (Allocation Period and N_ACID Indicator == 1) {	—	—
Allocation Period	5	See definition above in this IE
Number of ACID (N_ACID)	3	See definition above in this IE
}	—	—
MAP ACK Channel Index	6	See definition above in this IE
MAP NACK Channel Index	6	See definition above in this IE
}	—	—
}	—	—
}	—	—
}	—	—
Padding	*variable*	Padding to nibble; shall be set to zero
}	—	—

Table 423—Persistent MIMO UL IR HARQ Subburst IE format

Syntax	Size (bit)	Notes
Persistent_MIMO_UL_IR_HARQ_subburst_IE() {	—	—
MU Indicator	1	Indicates whether this UL burst is intended for multiple MS 0 = Single MS 1 = multiple MS
Allocation Flag	1	1 = allocate 0 = de-allocate
Dedicated MIMO UL Control Indicator	1	0 = MS shall use the stored Dedicated MIMO UL Control information from the last burst allocation where this information was included. 1 = MS uses the Dedicated MIMO UL control information is this IE
If (MU Indicator == 0) {	—	—
Group Indicator	1	TDD mode: *Reserved*, set to 0. Used for FDD/H-FDD case only; to indicate the group assignment of the MS (see 8.4.4.2 and 8.4.4.2.1) 0b0: Group #1 0b1: Group #2
If (Allocation flag == 0) {	—	—
RCID IE()	*variable*	—
MAP ACK Channel Index	6	Index to a MAP ACK channel within the Fast Feedback region. When MAP ACK Channel Index = 0b111111, it indicates NO MAP ACK channel is assigned to this de-allocation.
If (Resource Shifting Indicator== 1) {	—	—
$\mathbf{N_{SCH}}$	4	—
$\mathbf{N_{EP}}$	4	—
Slot Offset	*variable*	Indicates the start of this persistent allocation in OFDMA slots, with respect to the start of the UL subframe if an allocation start indication is not included in this IE and with respect to OFDM symbol offset and subchannel offset if an allocation start indication is included in this IE 7 bits – 2.5 ms frame 8 bits – 5 ms frame 9 bits – 10 ms frame 10 bits – 20 ms frame
Retransmission Flag	1	0: Deallocation command in Relevant Frame 1: Retransmission of deallocation command in Allocation Period
}	—	—
}	—	—

Table 423—Persistent MIMO UL IR HARQ Subburst IE format *(continued)*

Syntax	Size (bit)	Notes
If (Allocation Flag == 1) {	—	—
RCID_IE()	*variable*	—
If (Dedicated MIMO UL Control indicator == 1) {	—	—
Dedicated MIMO UL Control IE ()	*variable*	—
}	—	—
Persistent Flag	1	0 = non-persistent allocation 1 = persistent allocation
Duration Indicator	1	If Duration Indicator is 1, it indicates that Duration is explicitly assigned for this subburst. Otherwise, this subburst shall use the same Duration as the previous subburst. If *j* is 0 then this indicator shall be 1.
if (Duration Indicator == 1) {	—	—
N_{SCH}	4	—
N_{EP}	4	—
}		—
SPID	2	—
Slot Offset	*variable*	See definition above in this IE.
ACK Disable	1	When ACK Disable == 1, the allocated subburst does not require an ACK to be transmitted by the BS in the HARQ ACK BITMAP (see 8.4.5.3.22). In this case, no bit position is allocated for the subburst in the HARQ ACK BITMAP. For TDD SS, for the burst, MS shall not perform HARQ retransmission and ignore ACID, AI_SN and SPID, which shall be set to 0 by BS if they exist. For FDD SS, the BS may set the ACID to a value other than 0 if that ACID is listed in the Aggregated HARQ Channels TLV. The CRC shall be appended at the end of each subburst regardless of the ACK disable bit.
If (persistent flag ==1){	—	—
Allocation Period and N_ACID Indicator	1	If Allocation Period and N_ACID Indicator is 1, it indicates that allocation information (allocation period, Number of ACID (N_ACID) is explicitly assigned for this subburst. Otherwise, this subburst shall use the same allocation period as the previous subburst. If *j* is 0 then this indicator shall be 1.
if (Allocation Period and N_ACID Indicator == 1) {	—	—
Allocation Period	5	Period of the persistent allocation is this field value plus 1 (unit is frame).
Number of ACID (N_ACID)	3	Number of HARQ channels associated with this persistent assignment is this field value plus 1.

Table 423—Persistent MIMO UL IR HARQ Subburst IE format *(continued)*

Syntax	Size (bit)	Notes
}	—	—
MAP ACK Channel Index	6	Index to a MAP ACK channel within the Fast Feedback region.
MAP NACK Channel Index	6	Index to a shared MAP NACK channel within the Fast Feedback region. When MAP NACK Channel Index = 0b111111, it indicates NO MAP NACK channel is assigned to this allocation.
}	—	—
for (*i* = 0; *i* < N_Layers; *i*++) {	—	—
N_{SCH}	4	—
N_{EP}	4	—
SPID	2	—
ACID	4	Initial value of HARQ channel identifier.
AI_SN	1	Initial AI_SN for each ACID.
}	—	—
}	—	—
}	—	—
if (MU Indicator == 1) {	—	—
if (Dedicated MIMO UL Control indicator == 1) {	—	—
Dedicated MIMO UL Control IE ()	*variable*	—
}	—	—
Layer Relevance Bitmap	4	4 bit bitmap indicating if layer processing should be skipped in the subsequent 'for loop.' The bit position indicates the layer. The bit value: 0 = skip the layer; 1 = process the layer
for (*i* = 0; *i* < N_Layers; *i*++) {	—	For each instance of the for-loop, when the corresponding bit in the Layer Relevance Bitmap is set to 0, the subsequent fields within this instance of for-loop are omitted.
Group Indicator	1	TDD mode: *Reserved*, set to 0. Used for FDD/H-FDD case only; to indicate the group assignment of the MS (see 8.4.4.2 and 8.4.4.2.1) 0b0: Group #1 0b1: Group #2
If (Allocation flag == 0) {	—	De-allocate
MAP ACK Channel Index	6	Index to a MAP ACK channel within the Fast Feedback region. When MAP ACK Channel Index = 0b111111, it indicates NO MAP ACK channel is assigned to this de-allocation.

Table 423—Persistent MIMO UL IR HARQ Subburst IE format *(continued)*

Syntax	Size (bit)	Notes
RCID IE ()	*variable*	—
If (Resource Shifting Indicator == 1) {	—	—
Slot Offset	*variable*	See definition above in this IE
N_{SCH}	4	—
N_{EP}	4	—
Retransmission Flag	1	0: Deallocation command in Relevant Frame 1: Retransmission of deallocation command in Allocation Period
}	—	—
}	—	—
If (Allocation Flag == 1) {	—	—
RCID IE ()	*variable*	—
Persistent flag	1	—
Slot Offset	*variable*	See definition above in this IE
ACK Disable	1	See definition above in this IE
SPID	2	—
Duration Indicator	1	If Duration Indicator is 1, it indicates that Duration is explicitly assigned for this subburst. Otherwise, this subburst shall use the same Duration as the previous subburst. If *j* is 0 then this indicator shall be 1.
if (Duration Indicator == 1) {	—	—
N_{SCH}	4	—
N_{EP}	4	—
}	—	—
ACID	4	Initial value of HARQ channel identifier
AI_SN	1	—
if (Persistent Flag == 1) {	—	—
Allocation Period and N_ACID Indicator	1	If Allocation Period and N_ACID Indicator is 1, it indicates that allocation information (allocation period, Number of ACID (N_ACID) is explicitly assigned for this subburst. Otherwise, this subburst shall use the same allocation period as the previous subburst. If *j* is 0 then this indicator shall be 1.
if (Allocation Period and N_ACID Indicator == 1) {	—	—
Allocation Period	5	See definition above in this IE

Table 423—Persistent MIMO UL IR HARQ Subburst IE format *(continued)*

Syntax	Size (bit)	Notes
Number of ACID (N_ACID)	3	See definition above in this IE
}	—	—
MAP ACK Channel Index	6	See definition above in this IE
MAP NACK Channel Index	6	See definition above in this IE
}	—	—
}	—	—
}	—	—
}	—	—
Padding	*variable*	Padding to nibble; shall be set to zero
}	—	—

Table 424—Persistent MIMO UL IR HARQ for CC Subburst IE format

Syntax	Size (bit)	Notes
Persistent_MIMO_UL_IR_HARQ_for_CC_subburst_IE() {		
MU Indicator	1	Indicates whether this UL burst is intended for multiple MS 0 = Single MS 1 = multiple MS
Allocation Flag	1	1 = allocate 0 = de-allocate
Dedicated MIMO UL Control Indicator	1	0 = MS shall use the stored Dedicated MIMO UL Control information from the last burst allocation where this information was included. 1 = MS uses the Dedicated MIMO UL control information is this IE
If (MU Indicator == 0) {	—	—
Group Indicator	1	TDD mode: *Reserved*, set to 0. Used for FDD/H-FDD case only; to indicate the group assignment of the MS (see 8.4.4.2 and 8.4.4.2.1) 0b0: Group #1 0b1: Group #2
If (Allocation flag == 0) {	—	—
RCID IE()	*variable*	—

Table 424—Persistent MIMO UL IR HARQ for CC Subburst IE format *(continued)*

Syntax	Size (bit)	Notes
MAP ACK Channel Index	6	Index to a MAP ACK channel within the Fast Feedback region. When MAP ACK Channel Index = 0b111111, it indicates NO MAP ACK channel is assigned to this de-allocation.
If (Resource Shifting Indicator== 1) {	—	—
Duration	*variable*	Duration in slots. OFDMA Frame duration dependant 7 bits – 2.5 ms frame 8 bits – 5 ms frame 9 bits – 10 ms frame 10 bits – 20 ms frame
Slot Offset	*variable*	Indicates the start of this persistent allocation in OFDMA slots, with respect to the start of the UL subframe if an allocation start indication is not included in this IE and with respect to OFDM symbol offset and subchannel offset if an allocation start indication is included in this IE 7 bits – 2.5 ms frame 8 bits – 5 ms frame 9 bits – 10 ms frame 10 bits – 20 ms frame
Retransmission Flag	1	0: Deallocation command in Relevant Frame 1: Retransmission of deallocation command in Allocation Period
}	—	—
}	—	—
If (Allocation Flag == 1) {	—	—
RCID_IE()	*variable*	—
If (Dedicated MIMO UL Control indicator == 1) {	—	—
Dedicated MIMO UL Control IE ()	*variable*	—
}	—	—
Persistent Flag	1	0 = non-persistent allocation 1 = persistent allocation
Duration Indicator	1	If Duration Indicator is 1, it indicates that Duration is explicitly assigned for this subburst. Otherwise, this subburst shall use the same Duration as the previous subburst. If *j* is 0 then this indicator shall be 1.
if (Duration Indicator == 1) {	—	—
Duration	*variable*	See definition above in this IE
}	—	—
Slot Offset	*variable*	See definition above in this IE

Table 424—Persistent MIMO UL IR HARQ for CC Subburst IE format *(continued)*

Syntax	Size (bit)	Notes
ACK Disable	1	When ACK Disable == 1, the allocated subburst does not require an ACK to be transmitted by the BS in the HARQ ACK BITMAP (see 8.4.5.3.22). In this case, no bit position is allocated for the subburst in the HARQ ACK BITMAP. For TDD SS, for the burst, MS shall not perform HARQ retransmission and ignore ACID, AI_SN and SPID, which shall be set to 0 by BS if they exist. For FDD SS, the BS may set the ACID to a value other than 0 if that ACID is listed in the Aggregated HARQ Channels TLV. The CRC shall be appended at the end of each subburst regardless of the ACK disable bit.
If (persistent flag ==1){	—	—
Allocation Period and N_ACID Indicator	1	If Allocation Period and N_ACID Indicator is 1, it indicates that allocation information (allocation period, Number of ACID (N_ACID) is explicitly assigned for this subburst. Otherwise, this subburst shall use the same allocation period as the previous subburst. If *j* is 0 then this indicator shall be 1.
if (Allocation Period and N_ACID Indicator == 1) {	—	—
Allocation Period	5	Period of the persistent allocation is this field value plus 1 (unit is frame)
Number of ACID (N_ACID)	3	Number of HARQ channels associated with this persistent assignment is this field value plus 1
}	—	—
MAP ACK Channel Index	6	Index to a MAP ACK channel within the Fast Feedback region
MAP NACK Channel Index	6	Index to a shared MAP NACK channel within the Fast Feedback region. When MAP NACK Channel Index = 0b111111, it indicates NO MAP NACK channel is assigned to this allocation.
}	—	—
for (*i* = 0; *i* < N_Layers; *i*++) {	—	—
UIUC	4	—
Repetition Coding Indication	2	0b00: No Repetition coding 0b01: Repetition coding of 2 used 0b10: Repetition coding of 4 used 0b11: Repetition coding of 6 used
ACID	4	Initial value of HARQ channel identifier
AI_SN	1	Initial AI_SN for each ACID
}	—	—
}	—	—
}	—	—
if (MU Indicator == 1) {	—	—

Table 424—Persistent MIMO UL IR HARQ for CC Subburst IE format *(continued)*

Syntax	Size (bit)	Notes
if (Dedicated MIMO UL Control indicator == 1) {	—	—
Dedicated MIMO UL Control IE ()	*variable*	—
}	—	—
Layer Relevance Bitmap	4	4 bit bitmap indicating if layer processing should be skipped in the subsequent 'for loop.' The bit position indicates the layer. The bit value: 0 = skip the layer 1 = process the layer
for (i = 0; i < N_Layers; i++) {	—	For each instance of the for-loop, when the corresponding bit in the Layer Relevance Bitmap is set to 0, the subsequent fields within this instance of for-loop are omitted.
Group Indicator	1	TDD mode: *Reserved*, set to 0. Used for FDD/H-FDD case only; to indicate the group assignment of the MS (see 8.4.4.2 and 8.4.4.2.1) 0b0: Group #1 0b1: Group #2
If (Allocation flag == 0) {	—	De-allocate
MAP ACK Channel Index	6	Index to a MAP ACK channel within the Fast Feedback region. When MAP ACK Channel Index = 0b111111, it indicates NO MAP ACK channel is assigned to this de-allocation.
RCID IE ()	*variable*	—
If (Resource Shifting Indicator == 1) {	—	—
Slot Offset	*variable*	See definition above in this IE
Duration	*variable*	See definition above in this IE
Retransmission Flag	1	0: Deallocation command in Relevant Frame 1: Retransmission of deallocation command in Allocation Period
}	—	—
}	—	—
If (Allocation Flag == 1) {	—	—
RCID IE ()	*variable*	—
Persistent flag	1	—
Slot Offset	*variable*	See definition above in this IE
Duration Indicator	1	If Duration Indicator is 1, it indicates that Duration is explicitly assigned for this subburst. Otherwise, this subburst shall use the same Duration as the previous subburst. If j is 0 then this indicator shall be 1.

Table 424—Persistent MIMO UL IR HARQ for CC Subburst IE format *(continued)*

Syntax	Size (bit)	Notes
if (Duration Indicator == 1) {	—	—
Duration	*variable*	See definition above in this IE
}	—	—
ACK Disable	1	See definition above in this IE
UIUC	4	—
Repetition Coding Indication	2	See definition above in this IE
ACID	4	Initial value of HARQ channel identifier
AI_SN	1	—
if (Persistent Flag == 1) {	—	—
Allocation Period and N_ACID Indicator	1	If Allocation Period and N_ACID Indicator is 1, it indicates that allocation information (allocation period, Number of ACID (N_ACID) is explicitly assigned for this subburst. Otherwise, this subburst shall use the same allocation period as the previous subburst. If *j* is 0 then this indicator shall be 1.
if (Allocation Period and N_ACID Indicator == 1) {	—	—
Allocation Period	5	See definition above in this IE
Number of ACID (N_ACID)	3	See definition above in this IE
}	—	—
MAP ACK Channel Index	6	See definition above in this IE
MAP NACK Channel Index	6	See definition above in this IE
}	—	—
}	—	—
}	—	—
}	—	—
Padding	*variable*	Padding to nibble; shall be set to zero
}	—	—

Table 425—Persistent MIMO UL STC HARQ Subburst IE format

Syntax	Size (bit)	Notes
Persistent_MIMO_UL_STC_HARQ_subburst_IE() {		
Allocation Flag	1	—
Group Indicator	1	TDD mode: *Reserved*, set to 0. Used for FDD/H-FDD case only; to indicate the group assignment of the MS (see 8.4.4.2 and 8.4.4.2.1) 0b0: Group #1 0b1: Group #2
if (Allocation Flag == 0) {		// De-allocate
MAP ACK Channel Index	6	Index to a MAP ACK channel within the Fast Feedback region. When MAP ACK Channel Index = 0b111111, it indicates NO MAP ACK channel is assigned to this de-allocation.
RCID_IE ()	*variable*	
If (Resource Shifting Indicator ==1) {		// resource shifting is allowed
Duration	*variable*	Duration in slots. OFDMA Frame duration dependant 7 bits – 2.5 ms frame 8 bits – 5 ms frame 9 bits – 10 ms frame 10 bits – 20 ms frame
Slot Offset	*variable*	Indicates the start of this persistent allocation in OFDMA slots, with respect to the start of the UL subframe if an allocation start indication is not included in this IE and with respect to OFDM symbol offset and subchannel offset if an allocation start indication is included in this IE 7 bits – 2.5 ms frame 8 bits – 5 ms frame 9 bits – 10 ms frame 10 bits – 20 ms frame
Retransmission flag	1	0: Deallocation command in Relevant Frame 1: Retransmission of deallocation command in Relevant Frame – Allocation Period
}		
}		
if (allocation flag ==1) {		// allocation
RCID_IE()	*variable*	
Persistent Flag	1	
If (Persistent Flag == 1) {		

Table 425—Persistent MIMO UL STC HARQ Subburst IE format *(continued)*

Syntax	Size (bit)	Notes
Allocation Period and N_ACID Indicator	1	If Allocation Period and N_ACID Indicator is 1, it indicates that allocation information (allocation period, Number of ACID (N_ACID) is explicitly assigned for this subburst. Otherwise, this subburst shall use the same allocation period as the previous subburst. If *j* is 0 then this indicator shall be 1.
if (Allocation Period and N_ACID Indicator == 1) {		
Allocation period (ap)	5	Period of the persistent allocation is this field value plus 1 (unit is frame).
MAP NACK Channel Index	6	Index to a shared MAP NACK channel within the Fast Feedback region. When MAP NACK Channel Index = 0b111111, it indicates NO MAP NACK channel is assigned to this allocation.
}		
MAP ACK Channel Index	6	Index to a MAP ACK channel within the Fast Feedback region.
Number of ACID (N_ACID)	3	Number of HARQ channels associated with this persistent assignment is this field value plus 1.
}		
Tx count	2	Tx count shall be set to ‘0’ when Persistent Flag is set to ‘1’.
Duration Indicator	1	If Duration Indicator is 1, it indicates that Duration is explicitly assigned for this subburst. Otherwise, this subburst shall use the same Duration as the previous subburst. If *j* is 0 then this indicator shall be 1.
if (Duration Indicator == 1) {		
Duration	*variable*	
}		
Slot Offset	*variable*	Indicates the start of this persistent allocation in OFDMA slots, with respect to the start of the UL subframe if an allocation start indication is not included in this IE and with respect to OFDM symbol offset and subchannel offset if an allocation start indication is included in this IE 7 bits – 2.5 ms frame 8 bits – 5 ms frame 9 bits – 10 ms frame 10 bits – 20 ms frame

Table 425—Persistent MIMO UL STC HARQ Subburst IE format *(continued)*

Syntax	Size (bit)	Notes
ACK disable	1	When ACK Disable == 1, the allocated subburst does not require an ACK to be transmitted by the BS in the HARQ ACK BITMAP (see 8.4.5.3.22). In this case, no bit position is allocated for the subburst in the HARQ ACK BITMAP. For TDD SS, for the burst, MS shall not perform HARQ retransmission and ignore ACID, AI_SN and SPID, which shall be set to 0 by BS if they exist. For FDD SS, the BS may set the ACID to a value other than 0 if that ACID is listed in the Aggregated HARQ Channels TLV. The CRC shall be appended at the end of each subburst regardless of the ACK disable bit.
if (Tx count == 0) {		
UIUC	4	—
Repetition Coding Indicator	2	—
}		
ACID	4	Initial value of HARQ channel identifier
}		
Padding	*variable*	Padding to nibble; shall be set to zero
}	—	—

8.4.5.4.29 FDD Paired Allocation IE

When one or more FDD UL allocations are made in the other UL Group (that is, the UL Group different from the group to which the current UL-MAP belongs) in the generic FDD/H-FDD frame, the extended UIUC = 11 shall be used with the subcode 0x13 to notify FDD MSs of their allocation. H-FDD MSs shall ignore the FDD Paired Allocation IE. (See Table 426.)

Table 426—FDD Paired Allocation IE format

Syntax	Size (bit)	Notes
FDD_Paired_Allocation_IE() {	—	—
Extended 2 UIUC	4	FDD_Paired_Allocation_IE() = 0xD
Length	8	Length in bytes
while (data remains) {	—	—
UL-MAP_IE()	*variable*	See corresponding PHY specification. (See 8.4.5.4)
}	—	—
if !(byte boundary) {	—	—
Padding nibble	*variable*	Padding to reach byte boundary.

Table 426—FDD Paired Allocation IE format *(continued)*

Syntax	Size (bit)	Notes
}	—	—
}	—	—

8.4.5.5 Burst profile format

Table 427 defines the format of the Downlink Burst Profile TLV, which is used in the DCD message (6.3.2.3.1). The DL burst profile is encoded with a type of 1, an 8-bit length, and a 4-bit DIUC. The DIUC field is associated with the DL burst profile and thresholds. The DIUC value is used in the DL-MAP message to specify the burst profile to be used for a specific DL burst.

Table 427—OFDMA Downlink Burst Profile TLV format

Syntax	Size (bit)	Notes
Downlink_Burst_Profile {	—	—
Type = 1	8	—
Length	8	—
Reserved	4	Shall be set to zero
DIUC	4	—
TLV encoded information	*variable*	—
}	—	—

Table 428 defines the format of the Uplink Burst Profile TLV, which is used in the UCD message (6.3.2.3.1). The UL burst profile is encoded with a type of 1, an 8-bit length, and a 4-bit UIUC. The UIUC field is associated with the UL burst profile and thresholds. The UIUC value is used in the UL-MAP message to specify the burst profile to be used for a specific UL burst.

Table 428—OFDMA Uplink Burst Profile TLV format

Syntax	Size (bit)	Notes
Uplink_Burst_Profile {	—	—
Type = 1	8	—
Length	8	—
Reserved	4	Shall be set to zero
UIUC	4	—

Table 428—OFDMA Uplink Burst Profile TLV format *(continued)*

Syntax	Size (bit)	Notes
TLV encoded information	*variable*	—
}	—	—

Table 429 defines the format of the Downlink Burst Profile TLV with type = 153, which is used in the DCD message (6.3.2.3.1) for MS only. The DIUC field is associated with the DL burst profile and thresholds. The DIUC value is used in the DL-MAP message to specify the burst profile to be used for a specific DL burst.

Table 429—OFDMA Downlink Burst Profile TLV format for multiple FEC types

Syntax	Size (bit)	Notes
Downlink Burst Profile{	—	—
Type = 153	8	—
Length	8	—
Reserved	2	Shall be set to zero
Coding Type	2	0b00: BTC 0b01: CTC 0b10: ZT CC 0b11: LDPC
DIUC	4	—
TLV encoded information	*variable*	—
}	—	—

Table 430 defines the format of the Uplink Burst Profile TLV with type = 202, which is used in the UCD message (6.3.2.3.3) for MS only. The UIUC field is associated with the UL burst profile and thresholds. The UIUC value is used in the UL-MAP message to specify the burst profile to be used for a specific UL burst.

Table 430—OFDMA Uplink Burst Profile TLV format for multiple FEC types

Syntax	Size (bit)	Notes
Uplink Burst Profile{	—	—
Type = 202	8	—
Length	8	—
Reserved	2	Shall be set to zero

Table 430—OFDMA Uplink Burst Profile TLV format for multiple FEC types *(continued)*

Syntax	Size (bit)	Notes
Coding Type	2	0b00: BTC 0b01: CTC 0b10: ZT CC 0b11: LDPC
UIUC	4	—
TLV encoded information	*variable*	—
}	—	—

DIUC/UIUC for mandatory CC shall be referred to the Downlink/Uplink Burst Profile with type = 1. If there is no DL(UL) burst profile with type of 153(202), MSs shall refer to DL(UL) burst profile with type of 1. The burst transmitted without CID in the DL-MAP IE shall be encoded using DIUC specified in the DL burst profile with type of 1. This capability is determined by SBC-REQ/RSP (see 11.8.3.5.14).

MAP IEs that do not contain a CID or that contain broadcast/multicast CIDs shall always use type 1 DIUC (see Table 427).

8.4.5.6 Compressed maps

In addition to the standard DL-MAP and UL-MAP formats described in 6.3.2.3.2 and 6.3.2.3.4, the DL-MAP and UL-MAP may conform to the format presented in 8.4.5.6.1 and 8.4.5.6.2. The presence of the compressed DL-MAP format is indicated by the contents of the most significant three bits of the first data byte. The first three bits overlay the HT, EC, and most significant bit of Type field in a generic MAC header. When this combination of three bits is set to 110 (an invalid combination for a standard header in the downlink), the compressed DL-MAP format is present. A compressed UL-MAP shall only appear after a compressed DL-MAP. The presence of a compressed UL-MAP is indicated by a bit in the compressed DL-MAP data structure.

The compressed map shall occur directly after the DL Frame Prefix, or can be used as a private map in an AAS zone. When located after the DL Frame Prefix, the burst containing the Compressed DL-MAP (and appended UL-MAP) shall not contain any other messages and shall be mapped to slots in the same manner as the DL-MAP. When located in an AAS zone, the private map can be pointed to by a broadcast map, the AAS DLFP message, or another private map in a previous frame. Other restrictions of private maps include the following:

— The private map shall be the first message in a PHY burst.
— Private maps are only allowed to use unicast CID values.
— Allocations pointed to by a private map must occur within the same AAS zone as the private map.
— Both UL and DL allocations included in the private map are relative to the next frame + frame offset value negotiated with the SS (see 11.8.3.5.6).

When a private map chain is started that has UL IE, an AAS UL IE shall be included in the first UL map so the AAS zone information is known by the SS. This information only needs to be included in the first private map of a private map chain, or after any parameters in the AAS zone is changed. The DL zone information is expected to be static for the duration of the private map chain; however, a AAS DL IE can be included to change the DL AAS zone parameters. The private map is an optional feature that can be negotiated between the SS and BS. In addition, there is a capability bit to indicate if an SS can support private map chains. This is to support applications that utilize private maps but do not require chains.

8.4.5.6.1 Compressed DL-MAP

The compressed DL-MAP format is presented in Table 431. The message presents the same information as the standard format with one exception. In place of the DL-MAP's 48-bit Base Station ID parameter, the compressed format provides a subset of the full value. When the compressed format is used, the full 48-bit Base Station ID parameter shall be published in the DCD.

Table 431—Compressed DL-MAP message format

Syntax	Size (bit)	Notes
Compressed_DL-MAP() {	—	—
Compressed map indicator	3	Set to binary 110 to indicate a compressed map format
UL-MAP appended	1	—
FDD partition change flag	1	For FDD only. Indicates the next possible partition change. 0: Possible partition change in next frame 1: Minimum number of frames (excluding current frame) before next possible change is given by TLV 'FDD Frame Partition Change Timer'
Map message length	11	—
PHY Synchronization Field	32	—
DCD Count	8	—
Operator ID	8	—
Sector ID	8	—
No. OFDMA symbols	8	For TDD: Number of OFDMA symbols in the DL subframe; For FDD/H-FDD: Number of OFDMA symbols in H-FDD DL-subframe1 or DL-subframe 2 (whichever the case), including all AAS/permutation zone and including the preamble. For H-FDD, see 8.4.4.2.2
DL IE count	8	—
for (*i* = 1; *i* <= DL IE count; *i*++) {	—	—
DL-MAP_IE()	*variable*	—
}	—	—
if !(byte boundary) {	—	—
Padding Nibble	4	Padding to reach byte boundary
}	—	—
}	—	—

Compressed map indicator
A value of binary 11 in this field indicates the map message conforms to the compressed format described here. A value of binary 00 in this field indicates the map message conforms to the standard format described in 6.3.2.3.2. Any other value is an error.

UL-MAP appended
A value of 1 indicates a compressed UL-MAP (see 8.4.5.6.2) is appended to the current compressed DL-MAP data structure.

Map message length
This value specifies the length of the compressed map message(s) beginning with the byte containing the Compressed map indicator and ending with the last byte of the compressed DL-MAP message if the UL-MAP appended bit is not set or the last byte of the UL-MAP compressed message if the UL-MAP appended bit is set. The length includes the computed 32-bit CRC value.

PHY Synchronization
This field holds frame number and frame duration information. See 8.4.5.1 and Table 319.

DCD Count
Matches the value of the configuration change count of the DCD, which describes the DL burst profiles that apply to this map.

Operator ID
This field holds the 8 LSBs of the 24 MSBs of the 48-bit Base Station ID parameter.

Sector ID
This field holds the 8 LSBs of the 48-bit Base Station ID parameter.

DL IE count
This field holds the number of IE entries in the following list of DL-MAP IEs.

A CRC-32 value shall be appended to the end of the compressed map(s) data. The CRC is computed across all bytes of the compressed map(s) starting with the byte containing the compressed map indicator through the last byte of the map(s) as specified by the map message Length field. The CRC calculation is the same as that used for standard MAC messages.

In case the UL-MAP is not appended to the DL-MAP, the UL-MAP (if such exists) message shall be always transmitted on the burst described by the first DL-MAP IE of the DL-MAP.

8.4.5.6.2 Compressed UL-MAP

The compressed UL-MAP format is presented in Table 432. The message may only appear after a compressed DL-MAP message to which it shall be appended. The message presents the same information as the standard format with the exception that the generic MAC header is omitted.

Table 432—Compressed UL-MAP message format

Syntax	Size (bit)	Notes
Compressed_UL-MAP() {	—	—
UCD Count	8	—
Allocation Start Time	32	—
No. OFDMA symbols	8	For TDD, umber of OFDMA symbols in the UL subframe. For FDD, see 8.4.4.2.2
while (map data remains){	—	—
UL-MAP_IE()	*variable*	—
}	—	—
if !(byte boundary) {	—	—
Padding Nibble	4	Padding to reach byte boundary.
}	—	—
}	—	—

UCD Count
Matches the value of the Configuration Change Count of the UCD, which describes the UL burst profiles that apply to this map.

Allocation Start Time
Effective start time of the UL allocation defined by the UL-MAP.

8.4.5.7 AAS-FBCK-REQ/RSP message bodies

The format of the AAS Feedback Request message body is shown in Table 433.

Table 433—OFDMA AAS Feedback Request message body

Syntax	Size (bit)	Notes
OFDMA-AAS-FBCK-REQ_Message_Body() {	—	—
Frame Number	8	—
Number of Frames	7	—

Table 433—OFDMA AAS Feedback Request message body *(continued)*

Syntax	Size (bit)	Notes
Measurement DataType	1	0: Measure on DL preamble only 1: Measure on DL data (for this SS) only
Feedback Request Counter	3	—

Frequency measurement resolution	2	if Measurement Data Type = 0 {
		0b00 = 32 subcarriers
		0b01 = 64 subcarriers
		0b10 = 128 subcarriers
		0b11 = 256 subcarriers
		}
		if Measurement Data Type = 1 {
		0b00 = 1 subcarrier
		0b01 = 4 subcarriers
		0b10 = 8 subcarriers
		0b11 = 16 subcarriers
		}

Reserved	3	Shall be set to zero
}	—	—

Frame Number
The 8 LSBs of the frame number in which to start the measurement.

Number of Frames
The number of frames over which to measure.

Measurement Data Type
Indicates the type of data on which the measurement is carried out. If the Measurement Data Type field entry is set to 1, the measurement is carried out over all DL bursts for this SS during the period, which is indicated by Frame Number and Number of Frames. The measurement thereby extends over the DL bursts as a whole, including AAS DL preambles.

Feedback Request Counter
Increases every time an AAS-FBCK-REQ is sent to the SS. Individual counters shall be maintained for each SS. The value 0 shall not be used.

Frequency measurement resolution
Indicates the frequency measurement points on which to report. Measurement points shall be on the frequencies corresponding to the negative subcarrier offset indices $-N_{used}/2 + n$ times the indicated subcarrier resolution and corresponding to the positive subcarrier offset indices $N_{used}/2 - n$ times the indicated subcarrier resolution where n is a positive integer. In case of measurement on the DL data (value 1 of the Measurement Data Type field), only the frequencies occurring in the allocations of the addressed SS shall be reported.

The format of the AAS Feedback Response message body is shown in Table 434.

Feedback Request Counter
Counter from the AAS-FBCK-REQ messages to which this is the response. The value 0 indicates that the response is unsolicited. In this case, the measurement corresponds to the preceding frame.

Re(Frequency_value[i]) and Im(Frequency_value[i])
The real (Re) and imaginary (Im) part of the mean measured complex amplitude on the frequency measurement point (low to high frequency) in signed integer fixed point format ([±][2 bits].[5 bits]).

Table 434—OFDMA AAS Feedback Response message body

Syntax	Size (bit)	Notes
OFDMA-AAS-FBCK-RSP_Message_Body() {	—	—
Reserved	2	Shall be set to zero
Measurement data type	1	0: Measure on DL preamble only 1: Measure on DL data (for this SS) only
Feedback Request Counter	3	—
Frequency measurement resolution	2	—
for (*i* = 0; *i* < Number of Frequencies; *i*++){	—	—
Re(**Frequency_value**[i])	8	—
Im(**Frequency_value**[i])	8	—
}	—	—
RSSI mean value	8	—
CINR mean value	8	—
}	—	—

RSSI mean value
The mean RSSI as measured on the element pointed to by data measurement type, frame number and number of frames in the corresponding request. The RSSI is quantized as described in 8.3.9.2. When the AAS feedback response is unsolicited, this value corresponds to preceding frame.

CINR mean value
The mean CINR as measured on the element pointed to by data measurement type, frame number, and number of frames in the corresponding request. The CINR is quantized as described in 8.3.9.2. When the AAS feedback response is unsolicited, this value corresponds to preceding frame.

8.4.5.8 Optional reduced AAS private maps

Reduced AAS private maps are based upon the compressed map format, however they are specifically designed to support a single unicast IE per map. Their use is identical to compressed private maps, however, fields have been removed that are not require to support a single IE. The reduced AAS private map shall be pointed to by a broadcast map or private compressed map, which shall define the values of several fields that shall be constant for the duration of the private map chain. The behavior of the compressed map fields that are not present in the reduced AAS private map are described below:

a) *Frame Duration.* Acquired by the map that initiated the private map chain. Assumed constant for the duration of the private map chain.
b) *Frame Number.* Acquired by the map that initiated the private map chain. Counted by the SS for the duration of the private map chain.
c) *DCD Count.* Optionally included. Only required if DCD count changes.
d) *Operator ID.* Acquired by the map that initiated the private map chain. Assumed constant for the duration of the private map chain.

e) *Sector ID.* Acquired by the map that initiated the private map chain. Assumed constant for the duration of the private map chain.

f) *CID.* Only required in first map of private map chain.

g) *UCD Count.* Optionally included. May be sent in the first UL map of private map chain. If not included, the last received UCD Count shall be used.

h) *Allocation Start Time.* Optionally defined by Private Map Allocation Start Time, which may be sent in the first UL map of private map chain. If not included, the UL subframe start time is assumed to be static and defined by the last received Allocation Start Time in an UL map.

8.4.5.9 Reduced AAS private maps

8.4.5.9.1 Reduced AAS private DL-MAP

The reduced AAS private DL-MAP format is presented in Table 435. The reduced AAS private DL-MAP message eliminates the fields that are not relevant since the message is targeted to a single CID. The DL_PermBase of the zone containing the assigned DL allocation is assumed to have the same value as the zone in which the compressed private DL-MAP message is located.

Table 435—Reduced AAS private DL-MAP message format

Syntax	Size (bit)	Notes
Reduced_ AAS_Private_DL-MAP() {	—	—
Compressed map indicator	3	Set to 0b110 for compressed format
UL-MAP appended	1	1 = reduced UL Private map is appended
Compressed Map Type	2	Shall be set to 0b11 for reduced private map
Multiple IE	1	1 = Multiple IE mode
Reserved	1	Shall be set to zero
if (Multiple IE) {	—	—
NUM IE	8	—
}	—	—
for (ii = 1:NUM IE) {	—	—
Periodicity	2	00 = single command, not periodic, or terminate periodicity. Otherwise, repeat DL and UL allocations once per r frames, where $r = 2^{(n-1)}$, where n is the decimal equivalent of the Periodicity field.
CID Included	1	1 = CID included. The CID shall be included in the first compressed private MAP if it was pointed to by a DL-MAP IE with INC_CID == 0 or by a DL-MAP IE with a multicast CID.
DCD Count Included	1	1 = DCD Count included. The DCD count is expected to be the same as in the broadcast map that initiated the private map chain. The DCD count can be included in the private map it if changes.

Table 435—Reduced AAS private DL-MAP message format *(continued)*

Syntax	Size (bit)	Notes
PHY modification Included	1	1 = included
CQICH Control Indicator	1	1 = CQICH control information included
Encoding Mode	2	Encoding for DL traffic burst 0b00: No HARQ 0b01: Chase Combing HARQ 0b10: Incremental Redundancy HARQ 0b11: Conv. Code Incremental Redundancy
Separate MCS Enabled	1	Separate coding applied for reduced AAS_Private_MAP and DL data burst
If (Separate MCS Enabled) {	—	Specifies coding for the next private map in the allocation specified by this private map
Duration	10	Slot duration for reduced AAS Private Map
DIUC	4	Modulation and Coding Level
Repetition Coding Indication	2	0b00: No repetition 0b01: Repetition of 2 0b10: Repetition of 4 0b11: Repetition of 6
}	—	—
if (CID Included) {	—	—
CID	16	Shall be a unicast CID
}	—	—
If (CQICH Control Indicator == 1) {	—	—
Allocation Index	6	CQICH subchannel index within fast-feed-back region marked with UIUC = 0
Report Period	3	Reporting period indicator (in frames)
Frame offset	3	Start frame offset for initial reporting
Report Duration	4	Reporting duration indicator
CQI Measurement Type	2	0b00: CINR measurement based upon DL allocation 0b01: CINR measurement based upon DL frame preamble 0b10, 0b11: *Reserved*
Reserved	2	Shall be set to zero
}	—	—
if (DCD Count Included) {	—	—
DCD Count	8	Matches the value of the configuration change count of the DCD, which describes the DL burst profiles that apply to this map
}	—	—
if (PHY modification Included) {	—	—

Table 435—Reduced AAS private DL-MAP message format *(continued)*

Syntax	Size (bit)	Notes
Preamble Select	1	0 = Frequency shifted preamble 1 = Time shifted preamble
Preamble Shift Index	4	Updated preamble shift index to be used starting with the frame specified by the Frame Offset
Pilot Pattern Modifier	1	0: Not Applied, 1: Applied Shall be set to 0 if PUSC AAS zone
Pilot Pattern Index	2	pilot pattern used for this allocation [see 8.4.6.3.3 (AMC), 8.4.6.1.2.6 (TUSC)]: 0b00: Pilot pattern A 0b01: Pilot pattern B 0b10: Pilot pattern C 0b11: Pilot pattern D
}	—	—
DL Frame Offset	3	Defines the frame in which the burst is located. A value of zero indicates an allocation in the subsequent frame
if (current zone permutation is FUSC or optional FUSC) {	—	—
Zone symbol offset	8	The offset of the OFDMA symbol in which the zone containing the burst starts, measured in OFDMA symbols from beginning of the DL frame referred to by the Frame Offset
}	—	—
OFDMA Symbol Offset	8	Starting symbol offset referenced to DL preamble of the DL frame specified by the Frame Offset
If (current zone permutation is AMC, TUSC1 or TUSC2) {	—	AMC (2 x 3 type), TUSC1 and TUSC2 all have triple symbol slot lengths
Subchannel offset	8	—
No. OFDMA triple symbol	5	Number of OFDMA symbols is given in multiples of three symbols
No. subchannels	6	—
} Else {	—	—
Subchannel offset	6	—
No. OFDMA Symbols	7	—
No. subchannels	6	—
}	—	—
DIUC/N_{EP}	4	DIUC for Encoding Mode 0b00, 0b01, 0b11 N_{EP} for Encoding Mode 0b10
If (HARQ-enabled) {	—	Encoding Mode 0b01, 0b10, 0b11

Table 435—Reduced AAS private DL-MAP message format *(continued)*

Syntax	Size (bit)	Notes
DL HARQ ACK bitmap	1	HARQ ACK for previous UL burst
ACK Allocation Index	6	ACK channel index within HARQ ACK region
ACID	4	HARQ channel ID
AI_SN	1	HARQ Sequence Number Indicator
If (IR Type) {	—	Incremental Redundancy
N_{SCH}	4	Applied for Encoding Mode 0b10
SPID	2	Applied for Encoding Mode 0b10 and 0b11
Reserved	2	—
}	—	—
}	—	—
Repetition Coding Indication	2	0b00: No repetition coding 0b01: Repetition coding of 2 used 0b10: Repetition coding of 4 used 0b11: Repetition coding of 6 used
If (UL-MAP appended) {	—	—
Reduced_AAS_Private_UL-MAP()	*variable*	—
}	—	—
Reserved	3	—
}	—	—
Nibble Padding	*variable*	Padding depends upon HARQ options
CRC-16	16	—
}	—	—

A CRC 16-CCITT, as defined in ITU-T Recommendation X.25, shall be included at the end of each reduced private map. The CRC is computed across all bytes of the reduced map, including the appended UL map if included, starting with the byte containing the compressed map indicator through the last byte of the map including padding.

The “DL Frame Offset” and “UL Frame Offset” fields define the latency between the Reduced Private Map and the DL or UL allocation made by the Reduced Private Map. This is valid for all values of the “Periodicity” field. A Reduced Private Map with Periodicity = 00 indicates single allocation or termination of a periodic chain of private map allocations if such chain is established.

8.4.5.9.2 Reduced AAS private UL-MAP

The reduced AAS private UL-MAP format is presented in Table 436. The message may only appear after a reduced AAS private DL-MAP message to which it shall be appended.

Table 436—Reduced AAS private UL-MAP message format

Syntax	Size (bit)	Notes
Reduced_ AAS_Private_UL-MAP() {	—	—
AAS zone configuration Included	1	1 = AAS zone configuration included. AAS configuration should be included in the first UL map of a private map chain to define the UL AAS Zone.
AAS zone position Included	1	1 = AAS zone position included. AAS zone position should be included in the first UL map of a private map chain to define the UL AAS Zone and any time the UL AAS zone is changed.
UL MAP Information Included	1	1 = UL Map Information is included (UCD Count and Private Map Allocation Start Time). These fields should be included in the first allocation of a private map chain.
PHY modification Included	1	1 = Preamble shift index included.
Power Control Included	1	1 = Power control value included.
Include Feedback header	2	0b00 = No feedback 0b01 = MS shall transmit a CINR feedback header (type 0b1011) based upon the DL allocation 0b10 = MS shall transmit a CINR feedback header (type 0b1011) based upon the DL frame preamble 0b11 = *Reserved*
Encoding Mode	2	Encoding for UL traffic burst 0b00: No HARQ 0b01: Chase Combing HARQ 0b10: Incremental Redundancy HARQ 0b11: Conv. Code Incremental Redundancy
if (AAS Zone Config Included) {	—	—
Permutation	2	0b00: PUSC permutation 0b01: Optional PUSC permutation 0b10: AMC permutation 0b11: *Reserved*
UL_PermBase	7	—
Preamble Indication	2	0b00: 0 symbols 0b01: 1 symbol 0b10: 2 symbols 0b11: 3 symbols
Padding	5	—
}	—	—

Table 436—Reduced AAS private UL-MAP message format *(continued)*

Syntax	Size (bit)	Notes
if (AAS Zone Position Included) {	—	—
Zone Symbol Offset	8	The symbol offset of the UL AAS Zone referenced to the start of the UL subframe in the frame specified by the UL frame offset.
Zone Length	8	The duration of the UL AAS Zone, specified in number of OFDMA symbols.
}	—	—
if (UL MAP Information Included) {	—	—
UCD Count	8	Matches the value of the configuration change count of the UCD, which describes the UL burst profiles that apply to this map.
Private Map Allocation Start Time	32	Defines the start of the UL subframe relative to the start of the frame pointed to by the UL frame offset. This is defined in units of PS, and restricted to be less than T_f.
}	—	—
if (PHY modification included) {	—	—
Preamble Select	1	0 = Frequency shifted preamble 1 = Time shifted preamble
Preamble Shift Index	4	—
Pilot Pattern Modifier	1	0: Not Applied 1: Applied
Pilot Pattern Index	2	See 8.4.8.1.5 (Figure 263) and 8.4.6.3.3: 0b00: Pilot pattern A 0b01: Pilot pattern B 0b10: Pilot pattern C 0b11: Pilot pattern D
}	—	—
if (Power Control Included) {	—	—
Power control	8	Signed integer in 0.25 dB units.
}	—	—
UL Frame Offset	3	Defines the frame in which the burst is located. A value of zero indicates an allocation in the subsequent frame.
Slot Offset	12	The offset to the starting location of the UL burst from the beginning of the UL AAS zone in slots.
Slot Duration	10	The duration of the UL burst, specified in slots.
UIUC / N_{EP}	4	UIUC for Encoding Mode 0b00, 0b01, 0b11 N_{EP} for Encoding Mode 0b10.

Table 436—Reduced AAS private UL-MAP message format *(continued)*

Syntax	Size (bit)	Notes
if (HARQ-enabled) {	—	Encoding Mode 0b01, 0b10, 0b11
ACID	4	HARQ channel ID
AI_SN	1	HARQ Seq. Number Indicator
Reserved	3	Shall be set to zero
If (IR Type) {	—	Incremental Redundancy
$\mathbf{N_{SCH}}$	4	Applied for Encoding Mode 0b10
SPID	2	Applied for Encoding Mode 0b10 and 0b11
Reserved	2	Shall be set to zero
}	—	—
}	—	—
Repetition coding Indication	2	Applied for Encoding Mode 0b00 and 0b01 0b00: No repetition coding 0b01: Repetition coding of 2 used 0b10: Repetition coding of 4 used 0b11: Repetition coding of 6 used
}	—	—

8.4.6 OFDMA subcarrier allocations

For OFDMA, $F_s = floor(n \times BW/8000) \cdot 8000$ where n is the sampling factor which is dependent on bandwidth. Subtracting the guard tones from N_{FFT}, one obtains the set of "used" subcarriers N_{used}. For both UL and DL, these used subcarriers are allocated to pilot subcarriers and data subcarriers. However, there is a difference between the different possible zones. For FUSC and PUSC, in the DL, the pilot tones are allocated first; what remains are data subcarriers, which are divided into subchannels that are used exclusively for data. For PUSC in the UL, the set of used subcarriers is first partitioned into subchannels, and then the pilot subcarriers are allocated from within each subchannel. Thus, in FUSC, there is one set of common pilot subcarriers, and in PUSC of the DL, there is one set of common pilot subcarriers in each major group. However, in PUSC of the UL, each subchannel contains its own set of pilot subcarriers.

8.4.6.1 Downlink (DL)

The DL can be divided into a three-segment structure. A preamble begins the transmission. This preamble uses one of the three carrier-sets specified in 8.4.6.1.1.

Figure 243 illustrates the DL transmission basic structure.

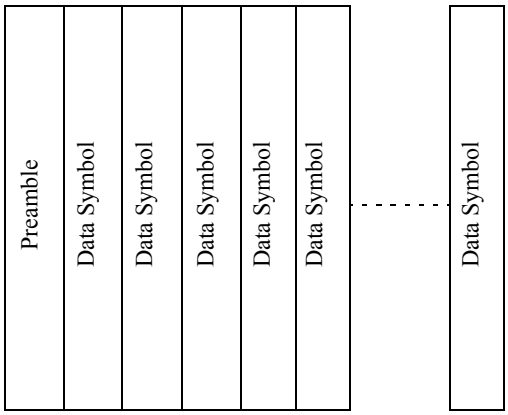

Figure 243—DL transmission basic structure

8.4.6.1.1 Preamble

The first symbol of the DL transmission is the preamble. For each FFT size, three different preamble carrier-sets are defined, differing in the allocation of subcarriers. Those subcarriers are modulated using a boosted BPSK modulation with a specific pseudo-noise (PN) code.

The preamble carrier-sets are defined using Equation (61).

$$PreambleCarrierSet_n = n + 3k \tag{61}$$

where

$PreambleCarrierSet_n$ specifies all subcarriers allocated to the specific preamble

n is the designating number of the preamble carrier-set indexed 0, 1, and 2

k is a running index. 0-567 for 2K-FFT, 0-283 for 1024-FFT, 0-142 for 512-FFT, and 0-35 for 128-FFT

Each segment uses a preamble composed of a single carrier-set in the following manner:

— Segment 0 uses preamble carrier-set 0.
— Segment 1 uses preamble carrier-set 1.
— Segment 2 uses preamble carrier-set 2.

In the case of segment 0, the DC carrier will not be modulated at all, and the appropriate PN will be discarded. Therefore, the DC carrier shall always be zeroed.

Each segment eventually modulates each third subcarrier. As an example, Figure 244 depicts the preamble of segment 1 in the case of the 2048-FFT. In this figure, subcarrier 0 corresponds to the first subcarrier used in the preamble symbol.

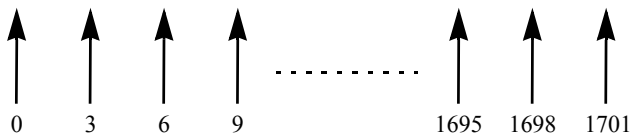

Figure 244—Basic structure of DL preamble, 2048-FFT

In the case of 2048-FTT, the PN series modulating the preamble carrier-set is defined in Table 437. The series modulated depends on the segment used and IDcell parameter. The defined series shall be mapped onto the preamble subcarriers in ascending order. In the case of 2048-FTT, Table 437 includes the PN sequence in an hexadecimal format. The value of the PN is obtained by converting the series to a binary series (W_k) and mapping the PN starting from the MSB of each symbol to the LSB (0 mapped to +1 and 1 mapped to –1). For example, for Index = 0 and Segment = 0, W_k = 110000010010..., and the mapping shall follow: –1 –1 +1 +1 +1 +1 +1 –1 +1 +1 –1 +1 ...).

In the case of 2048-FTT, the preamble symbol will include 86 guard band subcarriers on each side of the spectrum.

For 1024-FFT size, the PN series modulating the preamble carrier-set is defined in Table 438. For the preamble symbol, there will be 86 guard band subcarriers on each side of the spectrum.

For 512-FFT size, the PN series modulating the preamble carrier-set is defined in Table 439. However, in this case, the final bit of the 144-bit series shown in each row of the table shall be discarded, so that the series used is 143 bits long. For the preamble symbol, there will be 42 guard band subcarriers on the left (lower-frequency) side and 41 guard band subcarriers on the right (higher-frequency) side of the spectrum.

For 128-FFT size, the PN series modulating the preamble carrier-set is defined in Table 440. For the preamble symbol, there will be 10 guard band subcarriers on each side of the spectrum.

The modulation used on the preamble is defined in 8.4.9.4.3.1.

Table 437—Preamble modulation series per segment and IDcell for 2048-FFT mode

Index	IDcell	Segment	Series to modulate (W_k)
0	0	0	0xC12B7F736CFFB14B6ABF4EB50A60B7A3B4163EA3360F697C45 075997ACE17BB1512C7C0CEBB34B389D8784553C0FC60BDE4F16 6CF7B04856442D97539FB915D80820CEDD858483
1	1	0	0xA9F7AC1BD0A4BD694D3EDC2991CC3B2D24BF26A22346F8DB 370202CDA25D382D4119AAC676E320A938A95762C4078689B6024 E477F0EDA8F563106F0D70EBE3E006F75B50B537D
2	2	0	0x56531FBB87033E4F362273BAF0F8879B45B9F19143E5494F7B025 D138DF057756DE625196292AF6D28FD0AA08453E5B9871EDAE3E 680B848C67BFBD7ADE73CFBBBA4E81191267A
3	3	0	0xB397F552DEB2717CC19DDF0D59674DD6F6D3866A3FD023A009 F592B56460660F1D585E3078AFE272D97FDF4280790C3A9E5FCF99 10895E9DAF2BF65728F7390C930428B4E6793C

Table 437—Preamble modulation series per segment and IDcell for 2048-FFT mode *(continued)*

Index	IDcell	Segment	Series to modulate (W_k)
4	4	0	0x1BD4C84B42DF6B7DC53F6C7B8E223A3B16D8E214CFA5469A8D22246BCF297E5F92159406608B8A0BB55EF64A85B1241C5CDFA048CF0492AB3BCF46A8E8FE986F06E246F1E06C68
5	5	0	0x4E00947B6722B09389EFB4F6951C488B368393E825494835928744 1709C6F0E4463C067733C42A7FA89645D7D69AF2ACE5402AC473DBF2C75ECB8B630BAF4B27F282249BD52660
6	6	0	0x494CAB6935E10DB5D6E985997849EA45F0D5E2EDF7670BFD96 43531760D9F7CC01DD63BEEDFECB7E806F3F189291C074C8289D93A95324D131391E23EB9CEEAB0E789DA1F5B9CB
7	7	0	0x4C5F10264D6C5085346E86BF8567294523C1B683D2A220D9BED CEBBA110620BB53ECB0338BE7109240E22EC902FCA05F97338BB9DF2DDEAF7C795BCB160BD4F01A6DBF2A729373
8	8	0	0x79797D9AB260C20D5A460CDC49B2D0285E095E835EAF2ECC74E010DD8A53797CE0EC2EEBA51E779AA6B749B8E69FFDD632AC79D64143467E73017113BCDF45E787D0A9EAC3D22E
9	9	0	0xA1B9AC2C3D5B9BAAE5067C9E4A83C167076BE7D8699ACA710FF205DE774FD46DD5F7851A2149D61E57152B98B6AF4194B6FED90ADA008D1D5F8DD87E8060F943BC9124C1999236
10	10	0	0x066E5FA91D00D63B26036009F8C69142B9D936396FF9E13786478BBFF5DE6F184A0F844663950F69AFEDEA93CA4A3BF94B13175A2CBBA3836A34E5CE6D763767B35515F332D836
11	11	0	0xF443E9FBF763DA2A5137A57C7DA504D194EC1797AD33365BAC2F0C94541F4D47A664A7A17308C37E06BB0826FF999C15EE430A3CC54159E3B7EEBD5FF307BB24A939AB261E2B3C
12	12	0	0xF38BE6D2108483C056088C5E7C8BF92E9C973E0B2ADA9342B46C06C4C2516CF7B9E6043E2947AD40F41734E02A9ADCE9C70E03C4D50E7EAC73DAD56BDBB796289DDCC357776DE2
13	13	0	0x104AA84E70B163A42654A45995182B1C3DD63F4BCB09ECA79A0D6D2D2A784DD6015794598310BE087F75019227F899744B7C73A9008C83C0923D5DC154FB2DCBF8983E709BCDF3
14	14	0	0x0B49A507AC4EAAC7551FC4B00658A28D951FC81723CC1C024AAC6A9DE9686383C28036C762C020012D797866DE589B36BB95DFDAC2B3D0AB9DDE0B9719918062FE824E063BA3EC
15	15	0	0x64C14C7D3725A74923E6B2FB1C3BDC77FEE58CB0AF310EC37F22C93E2C809AE8410963E6CF5E7E192502960F0272244A31D2CDDC657BCFF422E29C50D5E82EDCB44579181BBA4D
16	16	0	0x210D8A8E602BD53F981BE763E10F4730BDA53D2F89BD1D91C8F2DD5B96732935F789F643911937344E9F2ECF3222AB076BC2B5EE407DC581F0EF9FFBD56D14D137A0418ADA06D0
17	17	0	0x88960A88E3F79C95D525DB49679C20A736D0E9E4D1FCB9DE7735AE1E947F4E93637E98143D6BB779394C58F2AC5A9BD7B2074E98F1B2026B67B507CAAD8076082B09FB345DA02D
18	18	0	0x1D2D5C8CDEAFCA5EC180D9638CD0F277AF08AB5133E6D60C919AADAD00569E5F902D40500542631FB729FC3AF456C9A47E3EB967D51E09D712D8D49A028E738BEC90061B089C9F

Table 437—Preamble modulation series per segment and IDcell for 2048-FFT mode *(continued)*

Index	IDcell	Segment	Series to modulate (W_k)
19	19	0	0xA063E03DE6C137F3FC56F970052BCF7333C8451BF5D18D1B9A A5342E79C25451C1D862ECB5CFF21B7CC203817D78C192EE1A68 976652E1740C4B123552C85CEE524A2AA90D428B
20	20	0	0xD2A7F126A9599093A9262E66A2471B6B6A2ACB0A4330A114011 366CBC3B01CC85CF1915982BE64DDDF8EEA0985D8F47BC4B413 81C58271C30578960EEFB054F299C721B81D5DFE
21	21	0	0x7682842351C76BC8E4A7EA4EDDB0F92F6E876FCFDFDAA4987 B38FC4FA47C52EF0070DCC8C77FA622B20BEBC2373011660B496 0EF49FB5E519D79E12029C7D13C553EDC48564A52
22	22	0	0xAD6143F875C4C965A7018B8230D8D50297DA2C54A6DD52EA62 07620F4A66EAFEBC4DD56233FF5DF78FB20CD74ECC6D01232FC FB9CBD36B3381F0224EF5DE7BE0AFEF0A1AEF3D82
23	23	0	0x9A14B722E05D8455A80B4A1B1D12A30C1E25D9488BAD486C63 9CC7BDF651E957E041A7C092A916BF3E3642121350579B3F8F8F4 A30570237E722A6DC532A26F4FD4A0767D91A8B
24	24	0	0xE6944DEEE85D75E3C5D9B90912177D8A85909D87AC21FA4A51 660E11D30DBEED391E5972D000EF4E9BF30B63B18C0285FE4151 A4231C289A824D405142B7C775C3C68D8AA1D8A7
25	25	0	0x9927326FDFEC99025AA1B79364F06C63AFE4A96C2A20FF8B151 EF97AFD08E161EA6B10A1FA74794521DE02645C2561D3BEA5D38 2AE3707112619403E23C724B36B791DFAFEAA3A
26	26	0	0x03C19F38117AE5BDADF256FB4A223A660E2D626598F56580E30 FA2E40A521FE5D68709B7F62E4C08CB9A26AE12002AD2FA9DE6 C2B298538556EFBA71626A02745C3DB5EBADD3F3
27	27	0	0xCBA035B40EB7C8A3A048C490E38935CBF956C58AFC891A6C11 2C0321CF5262498915794DCA703BD31A96FF4C0636F2D5E9F17C2 3F1486B90715597D565017CB8E424DE9A8E464E
28	28	0	0x9321B7BE085143649644BCDF8342FCAD3462DA1C572227B039B BC6F58B52EEED2ACFB38F9CAA2BA2F513A87B10DD19DEFB6A 9972EE12D81C83DBFB3CFCC93D35ED252D0E1A3D1E
29	29	0	0x215F6EA7C7F95C74828485AABF6A5F54FD32D1A8F4F6F1C20E 6CDB57FA81ED70DFE44ACCD4B37D4F01AD3BF31AFBB38A4DD BC613C8809E46C1247222E5041D8CDC08F37F679878
30	30	0	0xB5ABE9FC329600031F97DEA8CF5B17EC432BB9F19082A3CFA2 682AAF121EE855873119A78869AF988BD90C64A7F31224727D22F7 4D7499AF6CD3B649C54AED6DC84DD8AB876B84
31	31	0	0x956D097E914338D226020B8A3BA5B3BB8733A9723CF19485DD9 D22670B1328B825A6BA154586EDE60EB328AF8DF114182EDAEE4 01620A1E870BFFFF430922893C1F54A87A90BD3
32	0	1	0x251D994101EDA04D8BD0B8EA6FA20AE590C2CC199AB083C6A E61F091F2DD41D989EC164B1481D611BE9CEA0094AFE9DB56A47 63F55B26E54EAB73ACD7D4BBA64C1421BC3EB9D67
33	1	1	0x113A5FB9C529AADC9CAB1FB882905601778659CDB69AFCBAD DF8B42314A7985B5F87C20692309D350454FF9326481683FADAE47 11DD0CC5DACEDF7CD5DF1177D60EBA4DBE657F1

Table 437—Preamble modulation series per segment and IDcell for 2048-FFT mode *(continued)*

Index	IDcell	Segment	Series to modulate (W_k)
34	2	1	0x9F08189EFC6B5DE6C2CFDCD13195DE077586B8EE01E00B6468B10A53FAAC1DD846E2A01681980D444B6AD0D34C34EC9CFD9341507878EC9FBAE498F5A20614BDF3E4B22DD285E6
35	3	1	0x3ECD476669A04A260414FD16F3F525AA060F20ADD9334A29A9D9F90618916EF51840C8F53AB596297F0782BEF426E8B8539C9FDE970455B58F533FDAC1711DE6310E7596ED285E
36	4	1	0x3D6BD09A3DBD9ECCC1C584E71C87221CD266087C7A692D3EFF2D5F84DF2011EA3675853A61CD75D23600F8C115E03406AF914938170256B86DA5646CE0211FFDCD76A9A5E8D840
37	5	1	0x27F0DA91D4AD1F39F0EAD459E2705CB2CA029A8E57592F1697877199FF707D0411D6068A0664594D89568460F268A225BB2AC0ED043659D779EA84656DEC0322F8C0CB111AD2C8
38	6	1	0x616FBCE479AAAC98B483FCF6EC06BBA84580EA98FA517B3065A418CAF2C965B7AF2E7866B257390517016F252149008819337287 9FAA8954651E7B3C80BA1725CB781726F32328
39	7	1	0x357714863C5F477BE963806EA9D6EF6350BAFC1C183FCC6BB47FFFEAA9FFD86358918F6A218266D624CA07092EC24466C7F7120C1887A3F59A48EBAB67F24A6E8930B862F509A3
40	8	1	0xABE49D0F8B9C8406BD70B3FD83758768CDBA98164B929A1EA18D59BD44B80F9BBEF9D1CE51E4EE1CF21F6CCF18A7D4A92C26C121A22FC95663F0B55B892CF7D3D65812A503DA48
41	9	1	0x6898A2FC8C36DF0B84380FBCDE70812390B644E3B5BEA87D76C9123477638B331BEBC075664EA58C15680263664C48BF3411C3C13789C504A01FB4C7B9AC86AA524075E52C6A90
42	10	1	0xE7709988D2D2D6ABC6CEFB025FFCAFCA4C0E75C883529EA439B75229ECE88FB5BD5D3BCA17C25BEB6575D932D01B5A63E044102E208C071C734EBA55712E122822ED2F2B379A11
43	11	1	0xE49DCC8627542BA30FA500DCC23EEBF5A54B490EE7632C6BE57C724C3E74CD199930AB1D929D425185E2E1220CD2300F487392F4DC29416D332F13F8E760571D99617B263F387D
44	12	1	0xEE4CBD9B0EC65DE6DA78A2A205E5908B74127BDE612A9BD2D8F0C6A2B9E675401A9DDAA30FF9A55E87DAFFA3A33E53AAA1D96A60B326D7F6FA147098DD825BD0FB13ADDFE01569
45	13	1	0xAD7DAD0BCA42DEDAFCCF7E57DC58D00E691E81C04B98B2EDB66C66570B204B8352A08744D8A603C2A7769C7A9EE938189A45737B86871E5C4025EE594D827C603E3A49FD45519F
46	14	1	0xF8F29BA0D2FA2D529EAF2CE9383E614F5AE8CA06658DD039AB2C9912DFC7CD1BA9744339E537850B7E4EA564819772D3320B1C7BA73EC24D90B8DCE17EA5DAD53771F68B050F43
47	15	1	0x9CC0ECC9E7E8940DFED1332AF492CFD39A21F2820394EF0523019EE5290A2B4281FF032C238A6BE41116C274E918F34F3A27B5F147E10D41658CDC7EFEDC3135255C2B83B0AE6A
48	16	1	0xFCE9C41A74CBB56634447836109869E557C5A0FAA1D4566E36A51258CE6D096FBD3E0B7193418D9DFCBD27693F8A5072425D4E3F33DB5AB45B1EF3E11A6730BED42961DF0354CD

Table 437—Preamble modulation series per segment and IDcell for 2048-FFT mode *(continued)*

Index	IDcell	Segment	Series to modulate (W_k)
49	17	1	0x7941B66A275FB8F0BAA8EF7FFCC36AAA660113B66BE476D629AE512E489341F6C9F84EC1BE1C05CA3C850D20B1A12AA9C94E1A6541C29A9B4BCD41B94460DEF2E9643ADCE86728
50	18	1	0x0A91F390213C9B2ED372BA19FC42EE85AAB2598B58D2F7184EA920546D6A81ED316551B74B341E238A7FB83A4EF7D9EB0939B7771A6F4D0AF1F72752FE3234793D3CDC19BDFE08
51	19	1	0x96949ACCD785385AE8DE99CE42BBB73B996A886115A78D0606AEC14D2E46E849BF88F9A2E17C2494704F1020CEF85FFDE16B7483DBC6A130488E3AC586E528A00B90134776E08C
52	20	1	0x53FFBA26676A4FD1A6C30B8E4EA02DF535C922978CD24F6099C25003567F207CC5851656C5FD0D3F071942A16F1DB48DFBC26BACC15A1E618FF35F3DC3E141E3666BCA507ED72E
53	21	1	0x7F3219ABE1389DBED8FC2F1C9C0FCE1974E71C224E1922F4CAD42E40AF15A5ECDB14221480F964E67BBD345C44DCA0853548B399E3DF4D054D176C0804D1B1154152BE973A8896
54	22	1	0x8D5552CCA9EA46C991FF81A35873F43C963E02ED24C4102A79F5EB5EC25814511BA5DD2FE9FB9699E7ED76F965B24748AE1A4A3A590F4F13E4722CCE399006F79AD8CE673178F7
55	23	1	0xDB74EFA478268CDDE2596ADF9410FD83FCEDBB07C6DEC7A3422A6CC66EF901C1534EC2A83E1A89BA207C721ECF3D42918FF40B3863379FDF3CED7A9CC86E348CAB032F8FAAD9CD
56	24	1	0x5811ADD9240A7B3AF35CACA6EFCCF4090A54EBF33DE54C077192354DDEB81CC968D18354090B09D7472C83E1696E19545F08136EF20CD74656BCD31296066E03CC89E22E47CF47
57	25	1	0x871ECE60EDD2E19360D13862A15242250635774424B22465B3EF625E72072B7C45D81076DB4A5BFD5BE146F15CAA80DA031763DAC23BBBC54249E9878EC465F3EABE0B7AA497B8
58	26	1	0xD8259BAF89D3E13242CC1CDBA9C0281A09919D24ECF5BA83CDCD81E698EAA37DFE3E5802B3395B80A3DE91CF6C4BE2D34BBE985EE4041C4290D0A9185F115C963AD536E4133426
59	27	1	0x1203A1FD3F7B8E9D97A3812D4375D42BC9E8F0E393BD669A8099407EC0356DC45FEF848C98F3EF32A9A850CC67CE432339CBAF38BBA7DD0C94BC03B4704866509255E28450E459
60	28	1	0x6A78A3F0DC5E4FA504580C37F5416BCC4A2BD51FC1A71471BD1433EC3DD924E7130A7B2B331AB0B4AF6CF94C045A9C246965F46478D939795887EE3320BBC2D5DD5FFB06F894E8
61	29	1	0x3042F24E050BAB38880A07BDE5D28AEE4AD59E0D71AB59824122E80F8FF67BEA1ECC865F50B25CF5095C642B800E6A4D132B49E5968DEBDDA029A227AF332CF034BB937B471603
62	30	1	0xC82853465FBB213A85A52888464E5D38D997F6C31966A94B452A2DE853CE38010BF9EA930BBD318189D5D2D0BDB4465248A2E8B481021531BE01F5E0FF1BAB75370C57B36BE6E9
63	31	1	0x2B17EC947632DABA3A2E11022033F20F873032F51F064711111D0C215E9E84C11A9E70950977527960700B37C6FECCA57C35A91873C935D7EDC22CB44DCC251396173CAC82B912

Table 437—Preamble modulation series per segment and IDcell for 2048-FFT mode *(continued)*

Index	IDcell	Segment	Series to modulate (W_k)
64	0	2	0x83FC05D6DED982EB95B06E16C91EF94B441BBD4868C09E9B3A251AD72427F2124607E151796070C2819E395EB68A2C597391636333A7E492B70D8EA7397FFA1B28C20E0820CC45
65	1	2	0x45818FBAE49B983DB9B8FBEA1E816823430CE47BD1593173605CA255CCCCAE73C7283336BCBC94133DCA64D675BBA848A3E1C2EEE35D6085F06E72EAA696FBED6EA545F27D3692
66	2	2	0xA005745E452ACE6BDDFC4A9F6253BF4B467C93ACFF0F663A3F5949F15A1D266DEB0D26EC16D2A083F830E878A0300D74CFA3266CBBF3F0244ED56344D6AD5D887B3179CE56890D
67	3	2	0xE52F56367EA45E4683E020856D05D08391D3D84766CA22531B3EC6BE682E76B6ED7BCAABC3AB6BDE32C4F700D4CDFF26F79AE16499D2B70EC389AC3ED5E02FDF5C43B296CF965D
68	4	2	0xC5C62E3A911A0F28BF6A67E1DA2486FED7110B08F0A934C930AA035290D098857ECF3A069203A2560DADD5016802D9C1596526C7F1DA7C7B53360B0A673AA8634FB94D5838DC3E
69	5	2	0xF9E176A9837BF970D5FD51732ECB8D90FBD12F62B62F938BE07915BABB0C6596080C832CE7FF914C849B9DA66F2380F3058F66340A34CA43583EC8EDC1E5CB5A2A25436E72292D
70	6	2	0x5C26DB2489BE5197B20CD6B38B181B7789DCB90881AAC4B4317B2F40B44884144A1B15BCB53C8E30FEC419861C54B56158D9719E448B8A8F455F5B116275D796329059CDF682D3
71	7	2	0xEF35242D5C426C1EBD9563A761CFBF11A531ACB938922EBBA5227D8292585B777783972DA79C853A2A178601E6CFEA35380045B50EE628F13AE3EC5B72FED52F92F731BB594DE8
72	8	2	0x17FBB33193C68A1CAA8CEF5CB9A7FDFA1E89994F1779D2D0DE69DE75A6B338A07635C80A58722BB01398252F6C46AB7AEA79A6FC05F383F89ED65C49A2B9FB0D82A6EC03DD61F5
73	9	2	0x076C1A1DCA870DF36638307F891A52F737BA2B54EC0AD1FC5424D4F32DDE168ACE9B08653DEF8A23BF37CA3D306138D698A133834BFB65BDE57048B9EEC630B13E91EDB1B52E8F
74	10	2	0xA6800969ED0CE80A76F0F9BF7597ABE76DF60F243EE529C63AF72BAD6AB8B3F0B09DFC132C2B006827E55E352E3940A3BB8EE3526522ADF65AB76492BA41A393740A4B85CD5113
75	11	2	0x64817485E539E02AAB074982A56DC6E867C606313194BD66B4CF8B9E92C4F9FD138B0E6EF36F699A3E6DCC46741B8CB16389EBA2C745398A30EA3102B6BA4FE9A8DA9605F929FF
76	12	2	0xA3E438CB9EC48C4F4DD92C24950D0F1EAE7EEE920501C2C82531EDF8AEE3531F8D6B82D28C1FE0731088489FD215D19202DAEE0A57E3E1634C7A1BD5395CA64C64C14E5C02D436
77	13	2	0x8F9339B406037D35ADB9858576A62AF6139FD2B02D381C7DF147A274E145F76DE5687AEC5BD3A715E0E893EEB6F24573D4017B24B30D4357E339B104601FC2DD184DC9A8F0D76A
78	14	2	0xDA85062511E22DEDB53797BDBEC8B0281818E890D438CB5A48B2E4011FD5EFB2192C0FEDEE598372C7C06BEF25F9B9702A8A9F0F52B197E9C910BB63F467E53BF46A45F75C22F6

Table 437—Preamble modulation series per segment and IDcell for 2048-FFT mode *(continued)*

Index	IDcell	Segment	Series to modulate (W_k)
79	15	2	0x914DE1436839A8E2FDD4EACCD645C3D29E522E19E0055A2510679A977772830824C7363461CBF5D662456DB798BA72AEB67FEB2FC28DAAD3FAE0048727CF6E9B237A82489790D6
80	16	2	0xA21E09CF0A98EB012E8914A31BE5BE53F47AF5650B6BCE2812F65C994A100EA41F732830EB3F6C6F7028BC9FB3C5D108F63315DEDE8EE82CF5DE892032688E1C367D8567A20ACA
81	17	2	0x6E11F29AE45A99D74D911777D1DE60495C2DAF1705C7844FB7FC0A01247F3265F45D90A198ADCD0DB98A3CE22ACF24A77C737E5BF99DCD7EFA6B6096B70C572996B62E7814236B
82	18	2	0xE9F8FC17F5361DBCDD8F18F28CA90B618DF6B56D3481C9E3B7FDBEA6D55FAB32A4310A52AD7AAA26D082B38D4D8A2FCB70A3C6A4167515CA710E8F9B237F64B4D9A8C3CE8DF085
83	19	2	0x11FDC3B4712101D717D0EDD7556EAE0940AA1683D4CA4C22A7959436ECCA5E08A4BF2BF9EEF4BCE5E3E48DD77EB418F6B84BF8937CE0CF9DAD247A64E9E850373FEE3D673F47C2
84	20	2	0xE8784553C091233730B7DA704B8A02BEBE45E5DEF4361394E3B0E417FE3B571E641ADF2603402B8084A2D1318AF30CD95AD014D553408393AD345C05D62F435C708948233EF55B
85	21	2	0xCDD6E932F9D2FAD131E7AE666B758CC4BB60C60230FE14494D0F77E89A9BE726FAF8F9465AD0262D75C0A5374165A4FD2B4C602C0FF123F416360C112F6F95BD6790F81ACD858A
86	22	2	0xA2702DE422E1CBADAA8285C1C3B1F41D44561BCBF105466DF8070E604C733DE579755BCB8237C8DDB55A865B213D1929EDC553CE9B55994985F9EBEDF2A9F524301E3DA0498817
87	23	2	0x54487F7BDCDF87B1AA252798D7E5AD97E6F5263B7986B1E3E637852EDC83FA360676C04E35A1F5045B0A0B7DE9269F8A0E17F100D9AC78D873AE59BA0BA3E8AB3DDF928AD58F9E
88	24	2	0x3461AA27EDE0A9F7955B469C41AE1485EFBFE4EB233B0BBEB5F31BB36AC1E72CA6BF06B1E58F8612096CFA7289DEA8927B6368DC845DC8476074B83F3C1545A17F73EFE214A3C9
89	25	2	0x2DDBBF4F82EB33001E46F08D17DB89DCE3C7CC127F6B7D17839FE17A86F69178A1903E91857147348B491631336CB5D710382B59FF71416FEC2BAF0A0584F2155EEB71C54F84C4
90	26	2	0x762E2454401F66455358322AC0CFDF76EB18EFA9684A10F0F527537A54E75FAD77BD89E0D47980793C7B79B922C17792CC84BBEA81F6637192B74407A5B859EA1C873ED29D48FD
91	27	2	0xF74BBB6C4B97071EBC19F3FE7840A67A3959BD9936335A4F8BD10C9CFD925D8388C31B947BFD318FFC8B0967C132A602BC31B29835AE070006A50554CF3C5F85D56832ABA9CA5B
92	28	2	0x06493F32F3CA54692CAE2579388B97D99B5D540DE71F8B2405944C3A4FF18D7D45D4026DB9A867B85870BE6E23C9A8F84332D29B84B0303BB5179DFD89B56A14A37ABE053A0277
93	29	2	0xC88A3A3C0211A21661FD2B30937F0A187B6601E366A8FC5BCD4210E2D5D3365B22D4D63273F822D89EC1745304FBA4D0A9295AA51212C11C9D0A31FABB066289D8227B5BFDE8A0

Table 437—Preamble modulation series per segment and IDcell for 2048-FFT mode *(continued)*

Index	IDcell	Segment	Series to modulate (W_k)
94	30	2	0xA81E35C6A92953C584FE5FB3B6F1B0A532E91A49DB703D6E20D796F4532630C1D64DCEA580188BDDAB37722AD5DDCC9DFE7CFEDE1518D8E2ACA842F3570C7F381EAB9C5E4D485C
95	31	2	0x08C0CC1C53E52AA366AFA63A48EBE2F7389C8A33CEB20173432B4828D68A547D4673E27F942FCA95942029CFE9F413FDABE1D0BCF95022C5B99C1B229D151E9D3CA0A122F1BEEF
96	0	0	0x9774EF2FA326AB19DE599803EB48740C90995A4508064B6B19E58304229C5EDC578EF2C7030D4D2A01C9FB7618E7CB8564816354DD61EE144D7C94AFE8AB966875131B9F7C18BB
97	1	1	0xB9FBD947B7F9F3C8F6D3799E095BE558E6A2D0550C0DD0DDC92CC7BB53C1FE80D536B1FAE89C9224E3504629DBF0C5457944A72769B7162FBB0BBE18189749D3E7E264CFBA7A0E
98	2	2	0xFD0E15EC140B2E87817AECC16F134B66221C759CCF0E5000CDC0A3BADBB354D6845D745C22B1FB78C4205ABCF689495DE555CFFB4E4164A9ED06E484A192308A8CA89048A92C32
99	3	0	0x28237E963DE488B97083F5A76BF5A861773DB61108461A8CB8FAE918887897033207CEBFB83380BCC45748732F9752C86DEA5F5EE4BA741C6DAB59375DDCBDC6EFEDBCD10DF3C2
100	4	1	0x023B7D4F9CA92D1E796C749B7664CCC4E8558C5CF20BF702E39BC3AE525A9FAA6581F4A22EF6829A44156DAE4CABEA9C6A41D5A4325C02980C8FA4621A7FD08D874C687B68C706
101	5	2	0xB7FF5E696A6923C504E2A64A097EB201EC52D7963D9D5DA46051A4EBA8B2C2DB9FC4249ABF2D8CCC881F8AAD20230F1B66D5D48CF2BCC5CADE7217E25FB9F6CB93CCE4111A33C6
102	6	0	0x6870AA97FE0FF504C4247EBFA8EF1A21B6EEE100E407F293086E1F48C7292BEC491DDAF0E2CF02455825089FCD985F77CDC4B561A6B8CD60CE31CBE6D467CFB4D153746FB7BE0D
103	7	1	0x91466310F3C4F355233B54C0AB8CB818780691443781B71AB6FB8F6CD516661E39075B4207E55400E081FD79C524628C8FE1277BE1A6165ACB5F154158D26593FED2C48EF66268
104	8	2	0x45F8EB9235B6DC375771B69789AFEEEBB806965E6931A844F370CA14AA982635C54EA0BA973373D9FE010993B41EB8BF2C219B09AD13B4FE7FDC7295C55858834490674637ED95
105	9	0	0x3AA7974B18884644F5C782A5E71AF70D91220EB0C468D079AFB7DF8033D3AB54BC728657D60B349C575C8B3DEC403A6D406E3FC4D016655D406B0B78389CEFCFF8A37D867A44DF
106	10	1	0x1140B404D18CA769BDC1E1188BBB5BFA3B87668D158B0875F4D4EE90ED42974B5A02A6AAFC6977EACD194CB9E8423E2931F2CD9AEF6C90F44EC626C56518360D20AE97219FDE89
107	11	2	0x76BE5786CE3C33A20A3776587F83E6C5280BD4DF20FE6C52D6BB582957E0CAEB988B32C3DB58027815D8618FB6FDB1BCF9E871D6C552AED5679BE98189D95708FE92750C5ADE33
108	12	0	0x33597C2D850E76B116A82F95C766D2002B9822D52E09B1968BEF3DFD48D9F53D5296F1559BEB0BC7791C1F6B666EE68C605A2098A4A0BD57CE4F7A843068A8BA3BF0065ACA53C6

Table 437—Preamble modulation series per segment and IDcell for 2048-FFT mode *(continued)*

Index	IDcell	Segment	Series to modulate (W_k)
109	13	1	0x894B11E2BB6884D9FFD78C6A8103F3BD44E6DFE48CD0DC89C63A4F8BA95858545D37EC1652AB2C073B99BC667D1F396C87F9902FCB08686E563D0D30EBF3D65756A63F0037C240
110	14	2	0xDD08538B0939E852443E8801AB36C0FF50A6A0B63BBBE969F6A5A60BD6EEF19D070C3A14366EC789D39D07CD8891491FDB3C7EF57A0A310C8A4DC0A03D5DB84DA0D6911C4CBA9B
111	15	0	0x7FFA4EF380C6504225EA6C8339E130DB7E69577E9C46CA494F66E2D5B25A256444606103A821615C2CDEA721D153669E5025CDC37904CFC16A84E3B745079E5F1F3E08B0684BBB
112	16	1	0x8A608CAD1CD85FD846FB2A39FB61EBF9A219B9B7499179C2C066F3F78F3B3EDEF15B7227C650BEFB63C950E1B52632D78D1A0F34552BA138C877F09FCCFD30511E340F794D154A
113	17	2	0x775CA156A4C0BDB8FE5FF3CFB91FC7BC9DEAF1B8B3362D06C9738D332868BBA3B18A0A907EE7918D95510298E42F44B7BFC39D9E002EE24D1806EE0436B92DEC06DA3FDA2230F6

Table 438—Preamble modulation series per segment and IDcell for the 1024-FFT mode

Index	IDcell	Segment	Series to modulate (in hexadecimal format)
0	0	0	0xA6F294537B285E1844677D133E4D53CCB1F182DE00489E53E6B6E77065C7EE7D0ADBEAF
1	1	0	0x668321CBBE7F462E6C2A07E8BBDA2C7F7946D5F69E35AC8ACF7D64AB4A33C467001F3B2
2	2	0	0x1C75D30B2DF72CEC9117A0BD8EAF8E0502461FC07456AC906ADE03E9B5AB5E1D3F98C6E
3	3	0	0x5F9A2E5CA7CC69A5227104FB1CC2262809F3B10D0542B9BDFDA4A73A7046096DF0E8D3D
4	4	0	0x82F8A0AB918138D84BB86224F6C342D81BC8BFE791CA9EB54096159D672E91C6E13032F
5	5	0	0xEE27E59B84CCF15BB1565EF90D478CD2C49EE8A70DE368EED7C9420B0C6FFAF9AF035FC
6	6	0	0xC1DF5AE28D1CA6A8917BCDAF4E73BD93F931C44F93C3F12F0132FB643EFD5885C8B2BCB
7	7	0	0xFCA36CCCF7F3E0602696DF745A68DB948C57DFA9575BEA1F05725C42155898F0A63A248
8	8	0	0x024B0718DE6474473A08C8B151AED124798F15D1FFCCD0DE574C5D2C52A42EEF858DBA5
9	9	0	0xD4EBFCC3F5A0332BEA5B309ACB04685B8D1BB4CB49F9251461B4ABA255897148F0FF238
10	10	0	0xEEA213F429EB926D1BDEC03ABB67D1DE47B4738F3E929854F83D18B216095E6F546DADE

Table 438—Preamble modulation series per segment and IDcell for the 1024-FFT mode *(continued)*

Index	IDcell	Segment	Series to modulate (in hexadecimal format)
11	11	0	0xC03036FA9F253045DF6C0889A8B83BAEFCF90EB993C2D79BD911CA84075061AA43DA471
12	12	0	0x1E68EC22E5E2947FB0A29E4CC70597254B36C60331EACF779FE752D3F55DC41ABFC7DC9
13	13	0	0x63A57E75A0434F035AAC4504B265081D497F10C77928B71797C5D6C6824DC0F23BE34EE
14	14	0	0xC57C4612816DE981C58FD6F8DE9DD41F2422ADBC522B0CE31F9A6D5F2A126DC08F69FB1
15	15	0	0x978256AF184E7ED17789B33D324C711B36BFBCCE5446EB03687E9A0A839C7CE156104D2
16	16	0	0x011EC823157DD73150640CEB7DDB0A1F8F91E09599A851D5C7CAF687CFB752D297D82FC
17	17	0	0xC6DE82BEB7F57B9120E8A376D85C8F70FDC65BC660402DAC4AE6002EA2740C4F9E5973C
18	18	0	0x4C74929D6F9FAB9E5BB761026038E076F6824295E0AF397806ECEBC6DC713F03ACDC27C
19	19	0	0x13E1E85C2234D0F3418001A35F135E10C6C918C36BC659FDA9D655D288A0BDAA8BF489D
20	20	0	0xFD4AF2D8F4F08F1A7DF59291C9AEE788F641B8231CFB813376E0BEB68DFCFCBBE552445
21	21	0	0xEBBC77A493AA0C62C62F25EE5E8D0701F50386F49026FA31487C9FD5C5206CE4EB00576
22	22	0	0x134F936F9E875842587ADCA92187F2FC6D62FFC3A833D8CDE465F9972ABAA83763AAEB7
23	23	0	0x3CD1DA70670BC73363D1B4A66D280FF6AA7636D07ECF32BA26101E5EBA1594FB8A0420A
24	24	0	0x918296B2937C2B6F73CF98F85A81B723D1C69DBDF3E019749C582DA22E789562729D475
25	25	0	0xC323981B8B2240865F48D61AE1B3B61D88522B7358952F949D4308CA15D1EE8FDFA683F
26	26	0	0x7514A6FA5FBB250C5C8CE96F791D676036C344A44B24284477B44CB3E758F8BCD58F05B
27	27	0	0x84C7FEC6E977FA1EC0C7CC9E0D067C73D8F846F82ABB3456D2104E1448D5A58D5975152
28	28	0	0x4841AFC277B86A0E067AF319422F501C87ACBFBDD66BFEA3644F879AE98BA8C5D605123
29	29	0	0xF35EA87318E459138A2CE69169AD5FD9F30B62DA04ED21320A9F59893F0D176752152FD
30	30	0	0xA0C5F35C5971CD3DC55D7D2B9FD27AA17A198583F580EB0800744EE5B6B3648DEA95840
31	31	0	0xA6D3D33AD9B56862DBF076E3ACE6A3150510CCC8BE77DE4E6E10EB5FE163765647D07DF

Table 438—Preamble modulation series per segment and IDcell for the 1024-FFT mode *(continued)*

Index	IDcell	Segment	Series to modulate (in hexadecimal format)
32	0	1	0x52849D8F020EA6583032917F36E8B62DFD18AD4D77A7D2D8EC2D4F20CC0C75B7D4DF708
33	1	1	0xCC53A152209DEC7E61A06195E3FA633076F7AE1BAFFE83CE565087C0507BA596E0BD990
34	2	1	0x17D98A7E32CCA9B142FE32DB37B2BF726E25AA7A557FFB5C400B47A38B16CF18E1EDE63
35	3	1	0xA5BA8C7E2C795C9F84EBBD425992766BDE5549A7A9F7EF7E44AFD941C6084568638FE84
36	4	1	0x33E57E78A5696255CA61AE36027036DA619E493A0A8F95D9915C6E61F3006CB9706BEBA
37	5	1	0x09961E7309A9B7F3929C370C51910EBAB1B4F409FA976AE8679F354C84C4051F371F902
38	6	1	0x508A9EBAEF3C7E09CFCFC0B6F444A09B45A130EFC8C5B22BCE87213854E7C9D329C9ADC
39	7	1	0xAACEEF9BCDC82E4AD525185B07CBABCB74861D16F7C25CFBA917B05463AD65391AF840D
40	8	1	0x23060ACC5A125DAB207EEEE47B4EEE1E8466BD17DDA2EB3CD90D2AB7A758C213E6D7FE5
41	9	1	0xCA55521667BDA8B6F1B205201A51B3A0C05DE9EA06BC73268730A81A992777021F46055
42	10	1	0x05ADFCA2F8207DC6FF8D1A85A1DD4694D4C48A838C4F833C532710021AC448A7B62B8DD
43	11	1	0x218C951223D7B712DC98F8B5217388A830003C5F2A00F232DD3475D2FC78C25B8D88FF9
44	12	1	0x79B94D24D721121EF678B7156F8D2666DE712BBF3837C85A9518781903146A7B4D42A28
45	13	1	0x58AABEF6A6BDE4011CAC583C5104B2C6FC5A2980F856373E5931A3C690245327581FA13
46	14	1	0x427D1AD18E338E16FCE6E23B4AD6D82A2144D53048F2665AA94577AFABD26889FCB1F9F
47	15	1	0x337FE0E4C15A22471AE0F6B6F91161A7DE2E1403D73587D5C8355105D2F70642B2CE425
48	16	1	0xA3FCAA311B536AC9DB39FED9F4E996506B3181C58D6B7E04157A3FD463F60468765BCFD
49	17	1	0xF484FD1F57F53A4A749B86148E0B1D0653667CE1393198875DDB0AE9179BBBDAAD53A11
50	18	1	0xA3E9ECF1E6048562BC89DB6168E708855F0D4AD29F859EF36C9160DF407D85426233632
51	19	1	0x890519376D1FFAA2894EABCD6663B0A3C2411982C17B01270E0FB0B289D4BC8C3B83DA9
52	20	1	0x09847B6187BB5F6F6728B4ED610088FAD9DADFC00748E9DCD8A0CE320D6C991654ABE05

Table 438—Preamble modulation series per segment and IDcell for the 1024-FFT mode *(continued)*

Index	IDcell	Segment	Series to modulate (in hexadecimal format)
53	21	1	0x3285AE0A3D196313659C37BE1C94D61D20F11FD49D9FDF9D1026FF5763F02CB78AE135C
54	22	1	0x0069D3F34D0D455AFB45FEFDF716333B785C6BDA90DA23F1CC68BC6A1DBC916C595DA3E
55	23	1	0xAA977A8BCA39381E7C35A1ACC7C4F60421C0862BFD6106C7C025B0676EA0EF68972DD8F
56	24	1	0xF310745C497094ABE56E0490C0800319DBE290553E696B6859635AF03B121F79D925D19
57	25	1	0x964DFD350B9C7DFDC7F6F7C43283A76F0D613E48A5520D1DAF761C6F47E389B43A023F5
58	26	1	0x6D767B88D28A455CC3B56C942BAFD8E465A50FD2C22FE6162E03A9AAC3C1CC899800610
59	27	1	0xC5491C6CA3D998906EC1482F815B74B7C2E3816B682ACC6009AB7EFF34BF0E9CE59C754
60	28	1	0x6D8EE32D30E19D93A0E5AD8226BAE9CF6FCBA17CF6E67FDC5A15A81ECB8908BEDD77C80
61	29	1	0x98F8BFDF774C7A249418E6FF4723D6E6AB2F091CDE4DE1CE11D3BD463B509FB716940FD
62	30	1	0x65300BAD8FFA21BC7DC2C1F79FA97A9F469CCC9E270A61759F34D6276F57CBEB009CD21
63	31	1	0x6F36BB6D5A7DC4FB720439E91FF0DE86DD6C4B93CFC4271F2BCC6169616E3AEAA19E360
64	0	2	0xD27B00C70A8AA2C036ADD4E99D047A376B363FEDC287B8FD1A7794818C5873ECD0D3D56
65	1	2	0xE7FDDCEED8D31B2C0752D976DE92BEA241A713CF818C274AA1C2E3862C7EB7023AF35D4
66	2	2	0x87BF4954022D30549DF7348477EACB97AC3565B838460CC62F242883313B15C31370335
67	3	2	0x82DD830BEDE4F13C76E4CF9AEF5E42609F0BDDCB000A742B6372DD5225B0C3114494746
68	4	2	0x4E06E4CF46E1F5691938D7F40179D8F79A85216775384BD97966DB4BBF49FB6FAB8F945
69	5	2	0x64164534569A5E670FDB390D09C04802DD6A16B022CADC77EDD7464AFED43C773A8DC76
70	6	2	0xFB8769A81AA9DB607F14A6A95948401F83057CDC9C9C3996BA5821403A49F00A4E35191
71	7	2	0x77710D6F40B4F79CC63F678551C3EC18FA9DF2C82E6C8F415DADFD63264B7513180070E
72	8	2	0x503F196BBF93C238BFD5E735E5AE52E0DAE64F5E2F4C3B92E553F51303C4A64C4403BF3
73	9	2	0x5FD4A6894566678C95B9D5A59DDE5366799045FEB03A2BAA74094140E9068C61C2E972C

Table 438—Preamble modulation series per segment and IDcell for the 1024-FFT mode *(continued)*

Index	IDcell	Segment	Series to modulate (in hexadecimal format)
74	10	2	0x95B584DC40C8B5DEAD63D48FCE65B1E61BAB4C597D921DB12677141E2FFE7C0AA3DA0D5
75	11	2	0x985763AB6CC8934DB8A0BE738A7AF1D1FA3958C1F9E2D6A51A163E47A0A6E5FEB759FDD
76	12	2	0xFD8D45F00D943AD986BD353D61C6746DBF8A309B6AE1C173B880D957B76DC031A957E8D
77	13	2	0xAE4323534F6EFB1A20169328417885EF304FA220389FA9C2607E5A406F4CE4A7498A39F
78	14	2	0xE5205579893BE184CB9948C28E2F9AAF699D47B6E5E0B219CBEAFE4BEC8D561BD809E34
79	15	2	0xAB11D6941478D36D5695CE813070DC1E32122A39083E53FE373660AEB125D83383FBDCA
80	16	2	0x188A09C46F1F11206FF9F15CFB5F6CD2F26C4BF485EE37D3650A595064F76CE34E40EAD
81	17	2	0x4B1CDE25539A56CEDC45FE7F54C38CF155F4FB1AE868F6C3952D07014BF828E810BDE2D
82	18	2	0x16CA8F8C6A879E865E3611EAC389D56AFA3E4E84CDBB73567BA4A160249C4B680A7D9BC
83	19	2	0x39D2B08AA0E2E8781476027B41AD72F8D9838B7001AADFD33A92D81E56ECBB2C9378D58
84	20	2	0x8C258BC80D4AD125F335A5151EDF9E9A463E06C5C8D046F82E5DC3D73EF4D2231C5D14F
85	21	2	0x41A029C6356C825585179C5348EDF07A3AC2022539AC28DC4CD3C1DFADC8EE9644CD939
86	22	2	0x0D70A77CBE9804913BFBEC4FBF917C5CD3580F6062BBAD3F99ECEBB4A9EBB87523AB722
87	23	2	0x6A00A30901F9FDE44B4F1ECED44E0BCB943B29519F313BE4496D34F39B154FC2384CB75
88	24	2	0x95351107A8BE6ABFC24C1292FE1A0FE677CBFD04F2E81178CAA9D294730EF9C946F676E
89	25	2	0x01F21470FD9B1E0B3C6B2F7C0412A15764C277D61BA2EE3B3769DE7ADACB2BB29918FB7
90	26	2	0xA578ABFE155369440FA3D4DF757CCA596469B80A0E56BFE6010DD63E67CEDB86BB1EF39
91	27	2	0x1E1CFFAB031836777DE5D168A9246C559574C74CCC06405EB406B8DDB7C9A6EF54A66A5
92	28	2	0x354149C2CA19A735F9CD04AF4922E8ECE6509B978B951F946FD4AD36C7F9C83624205E7
93	29	2	0x5A27E60DEA547D0D41897A03199F28A967AC51728E3B38325B4FBECF1B85A7EE9B04182
94	30	2	0x784DA3B16B810FE3B851060AD7BD27D9D9457F6C8899A13D311E531B855C15ECE6D3A2F

Table 438—Preamble modulation series per segment and IDcell for the 1024-FFT mode *(continued)*

Index	IDcell	Segment	Series to modulate (in hexadecimal format)
95	31	2	0xD7DFBC65797633A8C13D3EEC781D48952338136063B579D69437B 28B744B5A4BE18AFA9
96	0	0	0x61AF26BD39A9FFF52826625E04ADA299385A373FA946D837D754 E6CFEBB26F5C03B87CF
97	1	1	0xD77D97CDB93DBEAA65CAFA146F40D72B5E80944F750E07325DC 164ED60F32434BC7187D
98	2	2	0x4529D9CA65AF49C1C39BDC18CFAB87E03FE4DAFC0A48FF1457 D46B0DF66B414A23ACDDB
99	3	0	0x33AC0261DAA57C1D611EBA1C730D50AFEE5BE3E849030A4E891 BC8C5F4C78DCDDFEA263
100	4	1	0xBED48C704F02A84F03BCD299D919DA56F7B71EDF8A0F8A25E8F 8496F95A44CE2B9F74C9
101	5	2	0x0ECCBE0902EBF4B4C29506014A3706622784B7B2D5153E10AD311 2DC5E45277A32E79DE
102	6	0	0x7CB4937889C7DFD9AA2D37235E06F993D3D4F5D515B39CA652F6 2397C08457D66BC5A36
103	7	1	0x43F23F6CAC6C43896B3EDBF00E1CBD42E2CC75E2A996448F0FC F17F6779DD6E356FED11
104	8	2	0x72C8A209FBC4A568BEF03BCFE1B0D959F977B0963780B4E54E2B 9A1016344ACB7EE3E3A
105	9	0	0x77AEB9E50DC3727849A94FBFFCDB5B9589AF50ABD8A58808B96 63058E17A2EBC496DF43
106	10	1	0x667123C89077FE4AAAEF15C635E976C6811682D478FFC7B721A76 B5A38697DF4FB7D2CE
107	11	2	0xCBD6C5C9BE55B0BE76AD03392E8A8AB9A86063DB31B79280B44 7980BB841FD7E9DC6B9B
108	12	0	0xC7D7DEF8B3C9C8667D8D65063B4DAD1FF69445C87CA71DA955 D0CA23970E988A6EA4C83
109	13	1	0xFB246ABD92F9E560CB2BEC2317204C9CE22AD3BD19EA02E90F5 F3B7F4F65538D8ED098E
110	14	2	0x29E74579472FDD8FFC2700B2BF33C649989DD8153093A7CA08B50 F7A5E4BAED108A0F0D
111	15	0	0xA27F29D8D6CCD7EB4BBE303C3E9E95802DB98BFD5B8ED03B88 304359D92E3EC108CA3C8
112	16	1	0x3FE70E26FA00327FE3B2BE6BC5D5014F588F09C17D222C146DD6 8B4824692A651888C76
113	17	2	0x41E91307EC58801CFF2C7E9CFEFBEB71681FAE2BEAEC72D4E45 56E99345D3BA4B369B59

Table 439—Preamble modulation series per segment and IDcell for the 512-FFT mode[a]

Index	IDcell	Segment	Series to modulate (in hexadecimal format)
0	0	0	0x66C9CB4D1C8F31D60F5795886EE02FFF6BE4
1	1	0	0xD8C30DA58B5ED71056C5D79032B80E05522C
2	2	0	0x8EB62664E3B2C5222DE18E9000561F25AAFC
3	3	0	0x3B32299087C257CD31C67E4AA5DD697B0E08
4	4	0	0xC07E0B0C5DB44071EE6CEC40CA3135CB5DB8
5	5	0	0x89B08CD299A8AC757DB59107AF4E1EF1EE1C
6	6	0	0x1B72E8C0ECFAABF050091382B411B45A718C
7	7	0	0x5B33ED5A6303397EC3CCC35C8203A5A05178
8	8	0	0xAD1173C461254BF9181238319F93F86AF964
9	9	0	0x51E2005BBA69C858BCC741D84990B657271C
10	10	0	0x21A03B607DD96F270CBC759B2A9BD6A84A34
11	11	0	0x4518EC4C7AD645D24AD949B42A7881403C7C
12	12	0	0xF8B70C595A37315D301D378A4D2848C821D4
13	13	0	0xFF42582005F8382C5CC6298D757155B36B24
14	14	0	0x599EF40107CBB3B30AF945365494A0D60570
15	15	0	0xC6D6BE87F0D88458ABD22DE822B64E450738
16	16	0	0xE043896829F236B10A35014D9E4F26ECB95C
17	17	0	0x2347472A610FC084C71460393AEF36CBE928
18	18	0	0x5F4D880DC516DC0B3860DA948225D2BC6770
19	19	0	0x9EFEEA99631FAF0D9589E9640BCD56C5FF08
20	20	0	0xFE792EF83B235B3D4A6447BED27035454BC0
21	21	0	0xB3B1B868C121C4555A64161B654A4FE81D70
22	22	0	0xB7C2D44078510ADD2447D93E8A1231AE3910
23	23	0	0x16A9D8F71CC1CD0EFA0008AA343A7A4ADA4C
24	24	0	0x7389FDE96166E7E40F7A6778AA02944937A4
25	25	0	0xA0598A0907798B3465DD8CBD08565F0FB5B8
26	26	0	0x0E75B3C128085C954A25E5808FC5833A8FB0
27	27	0	0xBBCDA362265B4D4D2BEE80F635E638316280
28	28	0	0x660047B06A1B5FAE6A9F0679DBCA9B1A2DF4
29	29	0	0x2594AE119CB87E802D67EF7EE0EAE99474CC
30	30	0	0x8FB3FA462D2CFAF842BB5319D9786A997C10
31	31	0	0x599E199B609C0C654DB053E8C94F343AAFF8

Table 439—Preamble modulation series per segment and IDcell for the 512-FFT mode[a] *(continued)*

Index	IDcell	Segment	Series to modulate (in hexadecimal format)
32	0	1	0xE0187D89220D11B5F60DAC078A5E2EED6EF0
33	1	1	0x69F57E074F14A10FEC6144C26E98C4688330
34	2	1	0xD2C4067132528AA41BBE61A9C171A382F768
35	3	1	0xB027CB82594D3900700B541A99CCD5FD5870
36	4	1	0xE9B565C61F73EC6633A1F2D96EC409495B80
37	5	1	0xEBD7E29110582C5951233AB22B03DE709698
38	6	1	0x0CCA91DA1B42B0B55C924F32B08B1FAE0E18
39	7	1	0xA4213FFB85B56E27C74FC6ECBA359875438C
40	8	1	0x1A37F92589686CFE5E4D4BFD8E2BC63AA8CC
41	9	1	0x31531C7B2F7518BF59ACFB216FC74D09F2F4
42	10	1	0xCE026112DF00BB74E1B1F43B595112B16344
43	11	1	0x503494DE054AE395883AEDD8CC7801B8F124
44	12	1	0x8447E25CA9A0EE1CFB9FADB6C42B8F565B3C
45	13	1	0x757C45DA8F140FB6E71024294B2439CDACFC
46	14	1	0xF2A59A32B51CE505E45E9B5C7C7DBE880DF4
47	15	1	0x8DFBF09479BC91E466A539E077D2B26A8B2C
48	16	1	0x1C6FB87D76DB82FFA1E492166684CACEE560
49	17	1	0xA32CF584137FDF1D4CCE6A1CF40FEC1F4AE0
50	18	1	0xEC4D3AC52136FA468F28777078C8A82C0808
51	19	1	0x30CABB208C9D6C774814A163765E4ACBC540
52	20	1	0xCA3448C6716F6F8D15D7372A3A4F6E825A14
53	21	1	0xABD1526F4A510F820B689F30C1E7B88C8848
54	22	1	0x94E4E2AE2C4E47FD7D0A154C25BF40F759E0
55	23	1	0x43BFFD566D85BE162650670BE1A3CA523284
56	24	1	0xD7644475A2E5EDAD1AD184242E3C841A03E0
57	25	1	0xA61DDBA416D1D14358647C4ACEF2503001E4
58	26	1	0x1F9047A8651D4D4A7C582469DC8C41B68E08
59	27	1	0xE0EAC02D975263F36D4BEF70669CBDEE658C
60	28	1	0xDFAE7334BD2B8FF1D2C7CB5922823B03F744
61	29	1	0xD44B2AD5842F1EEA1A39DBC64EC064FCCFBC
62	30	1	0x08AD296C8D17ABD021E02E20DACC247673EC
63	31	1	0x2FE66830D806B3F8DD38D5FE1CF12DEB9774

Table 439—Preamble modulation series per segment and IDcell for the 512-FFT mode[a] *(continued)*

Index	IDcell	Segment	Series to modulate (in hexadecimal format)
64	0	2	0xC6325F42597BD48A8914944C7DB973D83E64
65	1	2	0xE04B98E9254434D3F765A621752C0F1FEC54
66	2	2	0xA74B60D84CCB156B1B8AE015B8CE980868EC
67	3	2	0x78E7405DCFDA1DFCDA6E54B3794B49A0F8B0
68	4	2	F32F4CA1A154E746FE1C2D1E4A1251779804
69	5	2	0x5A2905A1CF5D06444C880ADC07EB3889E71C
70	6	2	0x74290661C664DEB829569B7C4E6C32B2BE00
71	7	2	0xEBB53241F5D9CD87A612C0774ED2FED4679C
72	8	2	0xE33B89ABA4ED020D558B833AF74072922164
73	9	2	0x3B7D2DEEF829E230718AA7996CD814A4DD88
74	10	2	0x373861E8993FC22E176F6DA6A46A10158EF4
75	11	2	0x2BEA329B65DE1CD26ECDD382915AC40B1D0C
76	12	2	0x7A8B131BD5D1270C30003DA472DD81D9A434
77	13	2	0x9D6A237940057479D30BE19AD719F8F9B47C
78	14	2	0xC1FB9C3811B349E9F793A14C8AE8425A6218
79	15	2	0xDFFDE03D8C717A346B4B1D3C02693330A9B4
80	16	2	0x76254DEF89683CD7210898069E2CDA0EE144
81	17	2	0x09B9B69C132C4E2DC16A1438828147D65F94
82	18	2	0xB1CCE0D47DF246E9059CBC970168518206AC
83	19	2	0x1017669D7990F3AB4378924C69E442F2BAD0
84	20	2	0x772407B19C5FA41D542C8A2DC9ADD2C2943C
85	21	2	0x7A38C2889EB10D93F23EC75B212D327D18A8
86	22	2	0xD25A195D899BF6F531F5ECC228BE0678A438
87	23	2	0xA83FD1C33F4C6CAA5A0E8B062937AC310034
88	24	2	0xAA6DDD1A05ADF49F615BE9F9EBCA6630E440
89	25	2	0xB14990574937763EEBD71A12FEB0C673F878
90	26	2	0xDDF013D74BDDE5FBB621A32B54DE24AA1D60
91	27	2	0xD814295D387D2EE33F90C07CA493062B3054
92	28	2	0x89B93046231A786C3D74ABAEC6AFF42D037C
93	29	2	0x5680E918BA19199E841B4D6A7D1DD1420E78
94	30	2	0x639CC821373B332F975817C0A1AC16A48150
95	31	2	0x06711D78BD8978D82DA58B7E494DDF77E994

Table 439—Preamble modulation series per segment and IDcell for the 512-FFT mode[a] *(continued)*

Index	IDcell	Segment	Series to modulate (in hexadecimal format)
96	0	0	0xC882DD8DBD23C796A1389DA4EAA9A4138640
97	1	1	0x038086D70895496BCABC404B1EC999F67AC0
98	2	2	0x8203073A335DB9E57B0CA2F07D5958176B50
99	3	0	0x3FF1CD3638EE6469A4A482AF834EF56A2340
100	4	1	0x69EA7871159D5099F900C6133C07DABF56F0
101	5	2	0x4D88ABB17FF855393EDBC070CF0439D5E94C
102	6	0	0x01EFD43C87362B00E376A728BC597BEED978
103	7	1	0x7AE20D16F3CC6F947413518FDF6E1FCCCDE8
104	8	2	0xBB852F9A90B0DE260BB67F45491B31DE3A74
105	9	0	0x088627544BDF971C1AC4F86F05A212EE9634
106	10	1	0x0C8A08A37C2B9D3C1812E9C116B4E6A6285C
107	11	2	0xE74775CADDDDF0D2D808FE7FC1C177489284
108	12	0	0xE81ECC6AC393294E9B549A8B2BADE7FFF904
109	13	1	0x1C5FAE8CACE7A2CD13CAF4A34A440E909BF8
110	14	2	0x6EE7E42A292BDACC5C79B81CA6598274C940
111	15	0	0x407547BC0C961D9E9ADDE010F4990724E8DC
112	16	1	0x46CE626ACD894F9650E6B7C3F9E3BFAE5B08
113	17	2	0xC59B894FBF170F44F4816750280AB8CB4E48

[a]The final bit of the 144-bit series shown in each row of the table shall be discarded, so that the series used is 143 bits long.

Table 440—Preamble modulation series per segment and IDcell for the 128-FFT mode

Index	IDcell	Segment	Series to modulate (hexadecimal)	Index	IDcell	Segment	Series to modulate (hexadecimal)	Index	IDcell	Segment	Series to modulate (hexadecimal)
0	0	0	0x01E52A9B3	38	6	1	0xD2DD02238	76	12	2	0xF69E451B1
1	1	0	0xC96FF8AB1	39	7	1	0xFEA763CB2	77	13	2	0x91BC72EBF
2	2	0	0xA1F5CE648	40	8	1	0x8CE0D5FB6	78	14	2	0xF964A5447
3	3	0	0x1E2BF6919	41	9	1	0xCC25D7A7E	79	15	2	0xF8CD36F4A
4	4	0	0x051798B72	42	10	1	0x7019D3A92	80	16	2	0x726A3C802
5	5	0	0x932D7FA8E	43	11	1	0x784CF7EAB	81	17	2	0x118D1B682
6	6	0	0x2CBD50F73	44	12	1	0x07085DAC8	82	18	2	0xDED9E703A

Table 440—Preamble modulation series per segment and IDcell for the 128-FFT mode *(continued)*

Index	IDcell	Segment	Series to modulate (hexadecimal)	Index	IDcell	Segment	Series to modulate (hexadecimal)	Index	IDcell	Segment	Series to modulate (hexadecimal)
7	7	0	0xF86F6A451	45	13	1	0x4CEEB5E1F	83	19	2	0x3E8929773
8	8	0	0x2BA44F7E7	46	14	1	0x9E5CD5B80	84	20	2	0x2C64AA7F9
9	9	0	0xEEFA172C3	47	15	1	0x63A76FD05	85	21	2	0x2249CEA0F
10	10	0	0xFF46C729A	48	16	1	0xAA276F96F	86	22	2	0x01363A94E
11	11	0	0x0362D5C61	49	17	1	0x3370F5082	87	23	2	0x69D77721F
12	12	0	0x27DDC7CA5	50	18	1	0x35A644170	88	24	2	0xAE103C9B9
13	13	0	0x17EAEDAC6	51	19	1	0x16FD73B8B	89	25	2	0x89E2A6940
14	14	0	0x94ACD9E03	52	20	1	0xEEE990E94	90	26	2	0xA7BC42645
15	15	0	0x1A1AC22DD	53	21	1	0x28A3120FC	91	27	2	0xBBB6B9C0F
16	16	0	0xFD5E18DA6	54	22	1	0xC2FBC2993	92	28	2	0x5BF7598F8
17	17	0	0x35DEB6E0E	55	23	1	0x880BCACD3	93	29	2	0x4AE4C79FE
18	18	0	0xA0185E326	56	24	1	0xAFA4DB918	94	30	2	0x1FDC748C9
19	19	0	0x93B3F9C75	57	25	1	0xAE1E49884	95	31	2	0x877D5E6E4
20	20	0	0x632481EA8	58	26	1	0xF7945E264	96	0	0	0x0FE322452
21	21	0	0x8BB8104A5	59	27	1	0x38374CA42	97	1	1	0x4DC778B5F
22	22	0	0x87C89EF75	60	28	1	0x5AAE39B00	98	2	2	0xADD9E3F88
23	23	0	0x207AA794C	61	29	1	0x138069E54	99	3	0	0x2C1C857DC
24	24	0	0x6A4D1C403	62	30	1	0x966707005	100	4	1	0xCFB4B5503
25	25	0	0x7761B4BD7	63	31	1	0xA5037759E	101	5	2	0xCD8505E21
26	26	0	0x31ABBF06D	64	0	2	0x3FE158D96	102	6	0	0x82892F4CE
27	27	0	0x69C6E455F	65	1	2	0xAED3B839F	103	7	1	0x3979FD176
28	28	0	0xAB3B3CFF0	66	2	2	0xF5AE23268	104	8	2	0x5FA49C311
29	29	0	0x731412685	67	3	2	0x1895E68BE	105	9	0	0xBA7857B19
30	30	0	0xA3135C034	68	4	2	0x1443C94EC	106	10	1	0xBC030C4CA
31	31	0	0xFECCB2B85	69	5	2	0x929547307	107	11	2	0x517F3CBD6
32	0	1	0xAA37BDA7C	70	6	2	0xA17D3230C	108	12	0	0x7E545BE73
33	1	1	0x90955CE1F	71	7	2	0xD54FC0C33	109	13	1	0xDDCA69C3F
34	2	1	0xADBC1B844	72	8	2	0xAB77F079C	110	14	2	0xA01A2C8C7
35	3	1	0xA04A3B197	73	9	2	0xC3CA00A66	111	15	0	0x1C0B64435
36	4	1	0x015E56CB3	74	10	2	0x025519879	112	16	1	0x330282DF2
37	5	1	0x64D6F4038	75	11	2	0x6CF39F815	113	17	2	0x147FCCF4B

8.4.6.1.1.1 Common SYNC symbol (optional)

In every fourth DL transmission frame, the last OFDM symbol is the common SYNC symbol; it can be transmitted by the BSs in the 1024-/512-/128-FFT modes by antenna #0. The mapping of the common SYNC sequence to the common SYNC symbol subcarrier is defined by using the following formula:

$$Common\_SYNC\_\text{Carrier\_Set} = N_{LEFT-FFT} + 2k - 1$$

where

k is the number of the running index 1…[$(N_{FFT} - N_{LEFT\text{-}FFT} - N_{RIGHT\text{-}FFT} - 1)/2$], where [$x$] denotes the smallest integer number greater than x

$N_{\text{LEFT-FFT}}$ and $N_{\text{RIGHT-FFT}}$ are the numbers of guard subcarriers of the left band and right band of FTT size N_{FFT}, respectively. The values of $N_{LEFT\text{-}FFT}$ and $N_{RIGHT\text{-}FFT}$ for 1024-/512-/128-FFT modes are listed in Table 438, Table 439, and Table 440, and the DC carrier shall always be zeroed.

The common SYNC symbol is defined by frequency domain as shown in Figure 245, and the time domain illustration is shown in Figure 246.

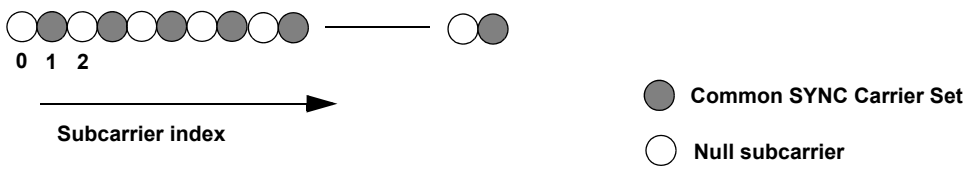

Figure 245—Common SYNC symbol structure (frequency domain)

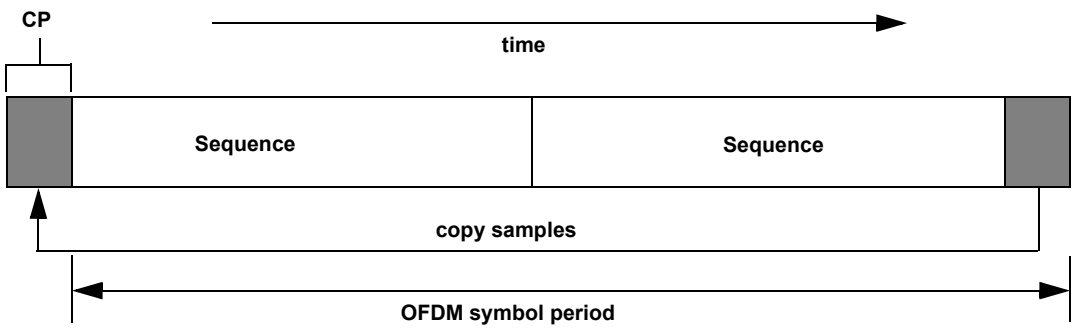

Figure 246—Common SYNC symbol structure (time domain)

The same common SYNC symbol is transmitted by al BSs across the network synchronously.

8.4.6.1.1.2 Common SYNC symbol sequence

The common SYNC sequences are listed in Table 441. The defined sequences shall be mapped onto the common SYNC symbol subcarriers in ascending order. The sequences in Table 438 are in an hexidecimal format, and the value of the sequences should be converted to binary sequences (0 mapped to +1 and 1 mapped to –1). The converted binary sequences are mapped onto the corresponding subcarriers from the MSB to the LSB.

Table 441—Common SYNC sequence

N_{FFT}	Sequence	PAPR (dB)	$N_{LEFT\text{-}FFT}$	$N_{RIGHT\text{-}FFT}$
1024	0x473A0B21CE9537F3A0B20316AC873A0B21CE95378 C5F4DFCE9537F3A0B21CE9537F3A0B20316AC80C5F4 DE316AC873A0B20316AC800	3.32	87	86
512	0x5642862D90FE75642862A6F018B642862D90FE749BD 79D590FE740	3.17	43	43
128	0x590A18B643F9D0	2.89	11	11

8.4.6.1.2 Symbol structure

8.4.6.1.2.1 Symbol structure for PUSC

The symbol structure is constructed using pilots, data, and zero subcarriers. The symbol is first divided into basic clusters and zero carriers are allocated. Pilots and data carriers are allocated within each cluster. Table 442 summarizes the parameters of the symbol structure.

Table 442—OFDMA DL subcarrier allocations—PUSC

Parameter	Value	Comments
Number of DC subcarriers	1	Index 1024 (counting from 0)
Number of Guard subcarriers, Left	184	—
Number of Guard subcarriers, Right	183	—
Number of used subcarriers (N_{used})	1681	Number of all subcarriers used within a symbol, including all possible allocated pilots and the DC carrier.
Number of subcarriers per cluster	14	—
Number of clusters	120	—
Renumbering sequence	1	Used to renumber clusters before allocation to subchannels: 6, 108, 37, 81, 31, 100, 42, 116, 32, 107, 30, 93, 54, 78, 10, 75, 50, 111, 58, 106, 23, 105, 16, 117, 39, 95, 7, 115, 25, 119, 53, 71, 22, 98, 28, 79, 17, 63, 27, 72, 29, 86, 5, 101, 49, 104, 9, 68, 1, 73, 36, 74, 43, 62, 20, 84, 52, 64, 34, 60, 66, 48, 97, 21, 91, 40, 102, 56, 92, 47, 90, 33, 114, 18, 70, 15, 110, 51, 118, 46, 83, 45, 76, 57, 99, 35, 67, 55, 85, 59, 113, 11, 82, 38, 88, 19, 77, 3, 87, 12, 89, 26, 65, 41, 109, 44, 69, 8, 61, 13, 96, 14, 103, 2, 80, 24, 112, 4, 94, 0
Number of data subcarriers in each symbol per subchannel	24	—
Number of subchannels	60	—

Table 442—OFDMA DL subcarrier allocations—PUSC *(continued)*

Parameter	Value	Comments
Basis permutation sequence 12 (for 12 subchannels)	—	6,9,4,8,10,11,5,2,7,3,1,0
Basis permutation sequence 8 (for 8 subchannels)	4	7,4,0,2,1,5,3,6

Table 443, Table 444, and Table 445 define the PUSC downlink carrier allocation series for 1024-FFT, 512-FFT, and 128-FFT modes, respectively.

Table 443—1024-FFT OFDMA downlink carrier allocations—PUSC

Parameter	Value	Comments
Number of DC Subcarriers	1	Index 512
Number of Guard Subcarriers, Left	92	—
Number of Guard Subcarriers, Right	91	—
Number of Used Subcarriers (N_{used}) including all possible allocated pilots and the DC subcarrier.	841	Number of all subcarriers used within a symbol.
Renumbering sequence	6, 48, 37, 21, 31, 40, 42, 56, 32, 47, 30, 33, 54, 18, 10, 15, 50, 51, 58, 46, 23, 45, 16, 57, 39, 35, 7, 55, 25, 59, 53, 11, 22, 38, 28, 19, 17, 3, 27, 12, 29, 26, 5, 41, 49, 44, 9, 8, 1, 13, 36, 14, 43, 2, 20, 24, 52, 4, 34, 0	Used to renumber clusters before allocation to subchannels.
Number of carriers per cluster	14	—
Number of clusters	60	—
Number of data subcarriers in each symbol per subchannel	24	—
Number of subchannels	30	—
PermutationBase6 (for 6 subchannels)	3,2,0,4,5,1	—
PermutationBase4 (for 4 subchannels)	3,0,2,1	—

Table 444—512-FFT OFDMA downlink carrier allocations—PUSC

Parameter	Value	Comments
Number of DC Subcarriers	1	Index 256
Number of Guard Subcarriers, Left	46	—
Number of Guard Subcarriers, Right	45	—
Number of Used Subcarriers (N_{used}) including all possible allocated pilots and the DC subcarrier.	421	Number of all subcarriers used within a symbol.

Table 444—512-FFT OFDMA downlink carrier allocations—PUSC *(continued)*

Parameter	Value	Comments
Renumbering sequence	12, 13, 26, 9, 5, 15, 21, 6, 28, 4, 2, 7, 10, 18, 29, 17, 16, 3, 20, 24, 14, 8, 23, 1, 25, 27, 22, 19, 11, 0	Used to renumber clusters before allocation to subchannels.
Number of carriers per cluster	14	—
Number of clusters	30	—
Number of data subcarriers in each symbol per subchannel	24	—
Number of subchannels	15	—
PermutationBase5 (for 5 subchannels)	4,2,3,1,0	—

Table 445—128-FFT OFDMA downlink carrier allocations—PUSC

Parameter	Value	Comments
Number of DC Subcarriers	1	Index 64
Number of Guard Subcarriers, Left	22	—
Number of Guard Subcarriers, Right	21	—
Number of Used Subcarriers (N_{used}) including all possible allocated pilots and the DC subcarrier.	85	Number of all subcarriers used within a symbol.
Renumbering sequence	2, 3, 1, 5, 0, 4	Used to renumber clusters before allocation to subchannels.
Number of carriers per cluster	14	—
Number of clusters	6	—
Number of data subcarriers in each symbol per subchannel	24	—
Number of subchannels	3	—

Figure 247 depicts the cluster structure.

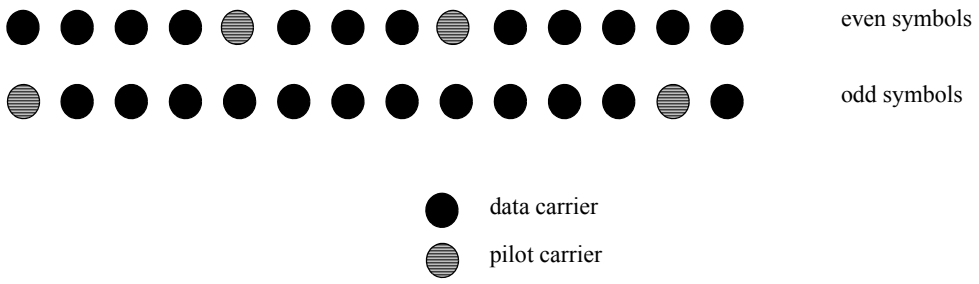

Figure 247—Cluster structure

Figure 247 shows subcarriers from left to right in order of increasing subcarrier index. For the purpose of determining PUSC pilot location, odd and even symbols are counted from the beginning of the current zone. The first symbol in the zone is even. The preamble shall not be counted as part of the first zone.

8.4.6.1.2.1.1 DL subchannels subcarrier allocation in PUSC

The carrier allocation to subchannels is performed using the following procedure:

a) Dividing the subcarriers into the number of clusters ($N_{clusters}$) physical clusters containing 14 adjacent subcarriers each (starting from carrier 0). The number of clusters, $N_{clusters}$, varies with FFT sizes. See Table 442, Table 443, Table 444, and Table 445 for details.

b) Renumber the physical clusters into logical clusters. If the physical clusters are placed in the first DL zone or *Use All SC* = 0 in the STC_DL_Zone_IE, then *LogicalCluster* = *RenumberingSequence*(*PhysicalCluster*). Otherwise, *LogicalCluster* = *RenumberingSequence*((*PhysicalCluster*) + 13 × *DL_PermBase*) mod $N_{clusters}$.

$$LogicalCluster = \begin{cases} RenumberingSequence(PhysicalCluster) & \text{First DL zone, or Use All SC} = 0 \text{ in STC\_DL\_Zone\_IE} \\ RenumberingSequence(((PhysicalCluster) + 13 \times DL\_\text{PermBase}) \bmod \text{N}_{\text{clusters}}) & otherwise \end{cases}$$

In the first PUSC zone of the DL (first DL zone) and in a PUSC zone defined by STC_DL_Zone_IE() with Use All SC = 0, the default renumbering sequence is used for logical cluster definition. For All other cases, DL_PermBase parameter in the STC_DL_Zone_IE() or AAS_DL_IE() shall be used.

c) Allocate logical clusters to groups. The allocation algorithm varies with FFT sizes.

   1) For FFT size = 2048: Dividing the clusters into six major groups, group 0 includes clusters 0–23, group 1 includes clusters 24–39, group 2 includes clusters 40–63, group 3 includes clusters 64–79, group 4 includes clusters 80–103, and group 5 includes clusters 104–119. These groups may be allocated to segments. If a segment is being used, then at least one group shall be allocated to it. (By default, group 0 is allocated to sector 0, group 2 is allocated to sector 1, and group 4 is allocated to sector 2.)

   2) For FFT size = 1024: Dividing the clusters into six major groups, group 0 includes clusters 0–11, group 1 includes clusters 12–19, group 2 includes clusters 20–31, group 3 includes clusters 32–39, group 4 includes clusters 40–51, and group 5 includes clusters 52–59. These groups may be allocated to segments. If a segment is being used, then at least one group shall be allo-

cated to it. (By default, group 0 is allocated to sector 0, group 2 is allocated to sector 1, and group 4 is allocated to sector 2.)

3) For FFT size = 512: Dividing the clusters into three major groups (labeled 0, 2 and 4), group 0 includes clusters 0–9, group 2 includes clusters 10–19, and group 4 includes clusters 20–29. These groups may be allocated to segments. If a segment is being used, then at least one group shall be allocated to it. (By default, group 0 is allocated to sector 0, group 2 is allocated to sector 1, and group 4 is allocated to sector 2.)

4) For FFT size = 128: Dividing the clusters into three major groups (labeled 0, 2, 4), group 0 includes clusters 0–1, group 2 includes clusters 2–3, group 4 includes clusters 4–5. These groups may be allocated to segments. If a segment is being used, then at least one group shall be allocated to it. (By default, group 0 is allocated to sector 0, group 2 is allocated to sector 1, and group 4 is allocated to sector 2.)

d) Allocating subcarriers to subchannel in each major group is performed separately for each OFDMA symbol by first allocating the pilot carriers within each cluster and then taking all remaining data carriers within the symbol and using the same procedure described in 8.4.6.1.2.2.2. The parameters vary with FFT sizes.

1) For FFT size = 2048: Use the parameters from Table 442, with basic permutation sequence 12 for even-numbered major groups and basic permutation sequence 8 for odd-numbered major groups, to partition the subcarriers into subchannels containing 24 data subcarriers in each symbol.

2) For FFT size = 1024: Use the parameters from Table 443, with basic permutation sequence 6 for even-numbered major groups and basic permutation sequence 4 for odd-numbered major groups, to partition the subcarriers into subchannels containing 24 data subcarriers in each symbol.

3) For FFT size = 512: Use the parameters from Table 444, with basic permutation sequence 5 for even-numbered major groups, to partition the subcarriers into subchannels containing 24 data subcarriers in each symbol.

4) For FFT size = 128:Use the parameters from Table 445 to partition the subcarriers into subchannels containing 24 data subcarriers in each symbol.

Note that the preamble IDcell is used for the first PUSC zone in Equation (63). Otherwise, the DL_PermBase parameter in the STC_DL_Zone_IE() or AAS_DL_IE() shall be used in the equation. The subcarrier indexing within each group shall start from 0, where 0 is the lowest number subcarrier in the lowest numbered logical cluster belonging to the group.

8.4.6.1.2.2 Symbol structure for FUSC

The symbol structure is constructed using pilots, data, and zero subcarriers. The symbol is first allocated with the appropriate pilots and with zero subcarriers, and then all the remaining subcarriers are used as data subcarriers (these will be divided into subchannels).

There are two variable pilot-sets and two constant pilot-sets. In FUSC, each segment uses both sets of variable/constant pilot-sets. In STC mode (see 8.4.8), each antenna uses half of the pilot set resources compared to that of non-STC mode. Table 446 summarizes the parameters of the symbol.

Table 446—OFDMA DL subcarrier allocations

Parameter	Value	Comments
Number of DC Subcarriers	1	Index 1024 (counting from 0).
Number of Guard Subcarriers, Left	173	—
Number of Guard Subcarriers, Right	172	—
Number of Used Subcarriers (N_{used})	1703	Number of all subcarriers used within a symbol, including all possible allocated pilots and the DC carrier.
Pilots	—	See Equation (62) for value.
VariableSet #0	71	0,72,144,216,288,360,432,504,576,648,720,792,864, 936,1008,1080,1152,1224,1296,1368,1440,1512,1584, 1656,48,120,192,264,336,408,480,552,624,696,768, 840,912,984,1056,1128,1200,1272,1344,1416,1488, 1560,1632,24,96,168,240,312,384,456,528,600,672, 744,816,888,960,1032,1104,1176,1248,1320,1392, 1464,1536,1608,1680
ConstantSet #0	12	9,153,297,441,585,729,873,1017,1161,1305,1449, 1593
VariableSet #1	71	36,108,180,252,324,396,468,540,612,684,756,828, 900,972,1044,1116,1188,1260,1332,1404,1476,1548, 1620,1692,12,84,156,228,300,372,444,516,588,660, 732,804,876,948,1020,1092,1164,1236,1308,1380, 1452,1524,1596,1668,60,132,204,276,348,420,492, 564,636,708,780,852,924,996,1068,1140,1212,1284, 1356,1428,1500,1572,1644
ConstantSet #1	12	81,225,369,513,657,801,945,1089,1233,1377,1521, 1665
Number of data subcarriers	1536	—
Number of data subcarriers per subchannel	48	—
Number of Subchannels	32	—
Basis permutation sequence	—	3, 18, 2, 8, 16, 10, 11, 15, 26, 22, 6, 9, 27, 20, 25, 1, 29, 7, 21, 5, 28, 31, 23, 17, 4, 24, 0, 13, 12, 19, 14, 30

Table 447, Table 448, and Table 449 summarize the parameters for 1024-FFT, 512-FFT, and 128-FFT FUSC carrier allocations.

Table 447—1024-FFT OFDMA DL carrier allocations—FUSC

Parameter	Value	Comments
Number of DC Subcarriers	1	Index 512
Number of Guard Subcarriers, Left	87	—
Number of Guard Subcarriers, Right	86	—

Table 447—1024-FFT OFDMA DL carrier allocations—FUSC *(continued)*

Parameter	Value	Comments
Number of Used Subcarriers (N_{used})	851	Number of all subcarriers used within a symbol, including all possible allocated pilots and the DC subcarrier.
Pilots	—	See Equation (62) for value.
VariableSet #0	36	0,24,48,72,96,120,144,168,192,216,240,264,288, 312,336,360,384,408,432,456,480,504,528,552, 576,600,624,648,672,696,720,744,768,792,816, 840
ConstantSet #0	6	$72 \times (2 \times n + k) + 9$ when $k = 0$ and $n = 0..5$ DC subcarrier shall be included when the pilot subcarrier index is calculated by the equation.
VariableSet #1	35	36,108,180,252,324,396,468,540,612,684,756, 828,12,84,156,228,300,372,444,516,588,660, 732,804,60,132,204,276,348,420,492,564,636, 708,780
ConstantSet #1	5	$72 \times (2 \times n + k) + 9$ when $k = 1$ and $n = 0..4$ DC subcarrier shall be included when the pilot subcarrier index is calculated by the equation.
Number of data subcarriers	768	—
Number of data subcarriers per sub-channel	48	—
Number of Subchannels	16	—
PermutationBase	—	6, 14, 2, 3, 10, 8, 11, 15, 9, 1, 13, 12, 5, 7, 4, 0

Table 448—512-FFT OFDMA DL carrier allocations—FUSC

Parameter	Value	Comments
Number of DC Subcarriers	1	Index 256
Number of Guard Subcarriers, Left	43	—
Number of Guard Subcarriers, Right	42	—
Number of Used Subcarriers (N_{used})	427	Number of all subcarriers used within a symbol, including all possible allocated pilots and the DC subcarrier.
Pilots	—	See Equation (62) for value.
VariableSet #0	18	0,24,48,72,96,120,144,168,192,216,240,264,288, 312,336,360,384,408
ConstantSet #0	3	$72 \times (2 \times n + k) + 9$ when $k = 0$ and $n = 0..2$ DC subcarrier shall be included when the pilot subcarrier index is calculated by the equation.
VariableSet #1	18	12,36,60,84,108,132,156,180,204,228,252,276, 300,324,348,372,396, 420

Table 448—512-FFT OFDMA DL carrier allocations—FUSC *(continued)*

Parameter	Value	Comments
ConstantSet #1	3	$72 \times (2 \times n + k) + 9$ when $k = 1$ and $n = 0..2$ DC subcarrier shall be included when the pilot subcarrier index is calculated by the equation.
Number of subcarriers	384	—
Number of data subcarriers per subchannel	48	—
Number of Subchannels	8	—
PermutationBase	—	2,0,1,6,4,3,5,7

Table 449—128-FFT OFDMA DL carrier allocations—FUSC

Parameter	Value	Comments
Number of DC Subcarriers	1	Index 64
Number of Guard Subcarriers, Left	11	—
Number of Guard Subcarriers, Right	10	—
Number of Used Subcarriers (N_{used})	107	Number of all subcarriers used within a symbol, including all allocated pilots and the DC subcarrier.
Pilots	4	See Equation (62) for value.
VariableSet #0	5	0, 24, 48, 72, 96
VariableSet #1	4	12, 36, 60, 84
ConstantSet #0	1	39
ConstantSet #1	0	N/A
Number of data subcarriers	96	—
Number of data subcarriers per subchannel	48	—
Number of Subchannels	2	—
PermutationBase	—	1, 0

The Variable set of pilots embedded within the symbol of each segment shall obey the following rule:

$$PilotsLocation = VariableSet\#x+6 \cdot (FUSC\_SymbolNumber \bmod 2) \tag{62}$$

where *FUSC_SymbolNumber* counts the FUSC symbols used in the current zone starting from 0.

Figure 248 depicts as an example of the symbol allocation for segment 0 on the first symbol.

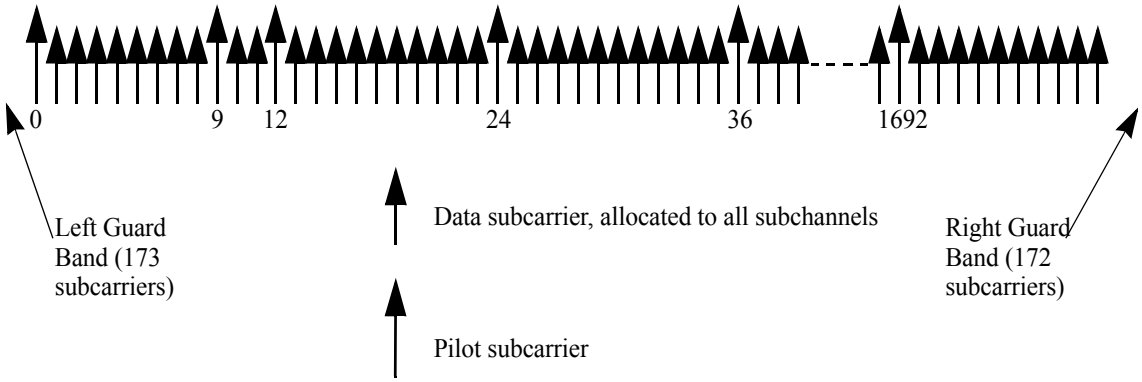

Figure 248—DL symbol structure for segment 0 on first symbol using FUSC

8.4.6.1.2.2.1 DL subchannels subcarrier allocation

Each subchannel is composed of 48 subcarriers. The subchannel indices are formulated using a Reed-Solomon series and are allocated out of the data subcarriers domain. The data subcarriers domain includes 48×32 = 1536 subcarriers, which are the remaining subcarriers after removing from the subcarrier's domain (0–2047) all possible pilots and zero subcarriers (including the DC subcarrier).

After allocating the data subcarriers domain, the procedure of partitioning those subcarriers into subchannels shall be as specified in 8.4.6.1.2.2.2.

8.4.6.1.2.2.2 Partitioning of data subcarriers into subchannels in DL FUSC

After mapping all pilots, the remainder of the used subcarriers are used to define the data subchannels.

To allocate the data subchannels, the remaining subcarriers are partitioned into groups of contiguous subcarriers. Each subchannel consists of one subcarrier from each of these groups. The number of groups is therefore equal to the number of subcarriers per subchannel, and it is denoted $N_{subcarriers}$. The number of the subcarriers in a group is equal to the number of subchannels, and it is denoted $N_{subchannels}$. The number of data subcarriers is thus equal to $N_{subcarriers} \times N_{subchannels}$.

The exact partitioning into subchannels is according to Equation (63), called a permutation formula. (To clarify the operation of this formula, an example application is given subsequently in 8.4.6.2.3.)

$$subcarrier(k, s) = N_{subchannels} \cdot n_k + \{p_s[n_k \bmod N_{subchannels}] + \text{DL\_PermBase}\} \bmod N_{subchannels} \quad (63)$$

where

subcarrier(k, s)	is the subcarrier index of subcarrier k in subchannel s
s	is the index number of a subchannel, from the set $[0...N_{subchannels}-1]$
n_k	is $(k + 13 \cdot s) \bmod N_{subcarriers}$ where k is the subcarrier-in-subchannel index from the set $[0 \ldots N_{subcarriers} - 1]$
$N_{subchannels}$	is the number of subchannels (for PUSC, use number of subchannels in the currently partitioned major group)
$p_s[j]$	is the series obtained by rotating basic permutation sequence cyclically to the left s times

DL_PermBase is an integer ranging from 0 to 31, which is set to preamble IDCell in the first zone and determined by the DL-MAP for other zones

and the numerical parameters are given in Table 446.

On initialization, an SS shall search for the DL preamble. After finding the preamble, the user shall know the IDcell used for the data Subchannels.

8.4.6.1.2.3 Additional optional symbol structure for FUSC

The additional optional subchannel structure in the DL supports 32 subchannels where each transmission uses 48 data carriers symbols as their minimal block of processing. In the DL, all the pilot carriers are allocated first, and then the remaining carriers are used exclusively for data transmission. N_{used} subcarriers except the DC subcarrier are divided into nine contiguous subcarriers in which one pilot carrier is allocated. The position of the pilot carrier in the nine contiguous subcarriers varies according to the index of the OFDM symbol that contains the subcarriers. If the nine contiguous subcarriers indexed as 0...8, the index of the pilot carrier shall be $3 \times l + 1$ where $l = m \bmod 3$ (m is the symbol index). Table 450 summarizes the optional FUSC DL subcarrier allocation parameters.

Table 450—OFDMA optional FUSC DL subcarrier allocation

Parameter	Value	Comments
Number of DC Subcarriers	1	Index 1024 (counting from 0).
N_{used}	1729	Number of all subcarriers used within a symbol, including all possible allocated pilots and the DC carrier.
Guard subcarriers: Left, Right	160, 159	—
Number of Pilot Subcarriers	192	—
Pilot subcarrier index	$9k + 3m + 1$, for $k = 0,...,191$ and m = [symbol index] mod 3	Symbol of index 0 in pilot sub-carrier index shall be the first symbol of the current zone.
Number of Data Subcarriers	1536	—

Table 451, Table 452, and Table 453 specify parameters for optional FUSC subcarrier allocations for FFT-1024, FFT-512, and FFT-128, respectively.

NOTE—A data symbol is a symbol that overlaps with at least one data slot (regardless of whether data are allocated on that slot).

8.4.6.1.2.3.1 DL subchannels subcarrier allocation

To allocate the subchannels, the whole data tones in a symbol are partitioned into groups of contiguous data subcarriers. Each subchannel consists of one subcarrier from each of these groups. The number of groups is, therefore, equal to number of data subcarriers per subchannel, and its value is 48. The number of the subcarriers in a group is equal to the number of subchannels, e.g., N_s. As shown in Table 454, N_s is determined by FFT size. The exact partitioning into subchannels is according to Equation (64), called the DL permutation formula.

Table 451—1024-FFT OFDMA DL carrier allocations—optional FUSC

Parameters	Value	Comments
Number of DC Subcarriers	1	—
Number of Guard Subcarriers, Left	80	—
Number of Guard Subcarriers, Right	79	—
Number of Used Subcarriers (N_{used}) (including all possible allocated pilots and the DC subcarrier).	865	—
Number of Pilot Subcarriers	96	—
Pilot Subcarrier Index	$9k+3m+1$ for $k = 0,1,\ldots,95$, and m = [symbol index] mod 3	Symbol of index 0 in pilot subcarrier index should be the first symbol of the current zone. m is incremented only for data symbols. DC subcarrier is excluded when the pilot subcarrier index is calculated by the equation.
Number of Data Subcarriers	768	—
Number of Data Subcarriers per subchannel	48	—

Table 452—512-FFT OFDMA DL carrier allocations—optional FUSC

Parameters	Value	Comments
Number of DC Subcarriers	1	—
Number of Guard Subcarriers, Left	40	—
Number of Guard Subcarriers, Right	39	—
Number of Used Subcarriers (N_{used}) (including all possible allocated pilots and the DC subcarrier).	433	—
Number of Pilot Subcarriers	48	—
Pilot Subcarrier Index	$9k+3m+1$ for $k = 0,1,\ldots,47$, and m = [symbol index] mod 3	Symbol of index 0 in pilot subcarrier index should be the first symbol of the current zone. m is incremented only for data symbols. DC subcarrier is excluded when the pilot subcarrier index is calculated by the equation.
Number of Data Subcarriers	384	—
Number of Data Subcarriers per subchannel	48	—

Table 453—128-FFT OFDMA DL carrier allocations—optional FUSC

Parameters	Value	Comments
Number of DC Subcarriers	1	—
Number of Guard Subcarriers, Left	10	—
Number of Guard Subcarriers, Right	9	—
Number of Used Subcarriers (N_{used}) (including all possible allocated pilots and the DC subcarrier).	109	—
Number of Pilot Subcarriers	12	—
Pilot Subcarrier Index	$9k+3m+1$ for k = 0,1,…,11, and m = [symbol index] mod 3	Symbol of index 0 in pilot subcarrier index should be the first symbol of the current zone. m is incremented only for data symbols. DC subcarrier is excluded when the pilot subcarrier index is calculated by the equation.
Number of Data Subcarriers	96	—
Number of Data Subcarriers per subchannel	48	—

$$Carriers(s,m) = \begin{cases} N_s \times k + [s + P_{1,c_1}(k') + P_{2,c_2}(k')], 0 < c_1, c_2 < N_s \\ N_s \times k + [s + P_{1,c_1}(k')], c_1 \neq 0, c_2 = 0 \\ N_s \times k + [s + P_{2,c_2}(k')], c_1 = 0, c_2 \neq 0 \\ N_s \times k + s, c_1 = 0, c_2 = 0 \end{cases} \quad (64)$$

where

Carriers(s,m) is the subcarrier index of m-th subcarrier in subchannel s
k is $(m + s \times 23)$ *mod* 48
k' is k *mod*$(N_s - 1)$
m is the subcarrier-in-subchannel index from the set [0~47]
s is the index number of a subchannel from the set [0~N_s–1]
$P_{1,c_1}(j)$ is the j-th element of the sequence obtained by rotating basic permutation sequence P_1 cyclically to the left c_1 times. See Table 454.
$P_{2,c_2}(j)$ is the j-th element of the sequence obtained by rotating basic permutation sequence P_2 cyclically to the left c_2 times. See Table 454.
c_1 is DL_PermBase mod N_s
c_2 is floor(DL_PermBase mod /N_s)

In Equation (64), the operation in [ ] is over GF(N_s). In GF(2^n), addition is binary XOR operation. For example, 13 + 4 in GF(2^n) is [$(1101)_2$ XOR $(0100)_2$] = $(1001)_2$ = 9, where $(x)_2$ represents binary expansion of x. Also, P_1, P_2 permutation sequences shall be taken from Table 454. k' shall be calculated as follows: $k' = k$ mod(length of permutation sequence) .

Table 454—Basic permutation sequences for diversity subcarrier allocations

FFT size	N_s	Basic permutation sequences		
128	2	GF(2)	P_1	1
			P_2	1
512	8	GF(8)	P_1	1, 2, 4, 3, 6, 7, 5
			P_2	1, 4, 6, 5, 2, 3, 7
1024	16	GF(16)	P_1	1, 2, 4, 8, 3, 6, 12, 11, 5, 10, 7, 14, 15, 13, 9
			P_2	1, 4, 3, 12, 5, 7, 15, 9, 2, 8, 6, 11, 10, 14, 13
2048	32	GF(32)	P_1	1, 2, 4, 8, 16, 5, 10, 20, 13, 26, 17, 7, 14, 28, 29, 31, 27, 19, 3, 6, 12, 24, 21, 15, 30, 25, 23, 11, 22, 9, 18
			P_2	1, 4, 16, 10, 13, 17, 14, 29, 27, 3, 12, 21, 30, 23, 22, 18, 2, 8, 5, 20, 26, 7, 28, 31, 19, 6, 24, 15, 25, 11, 9

8.4.6.1.2.4 Optional DL tile usage of subchannels—TUSC1

The optional DL TUSC1 is similar in structure to the UL PUSC structure defined in 8.4.6.2. Each transmission uses 48 data subcarriers as the minimal block of processing. The permutation properties are given in Table 455, Table 456, Table 457, and Table 458. The active subchannels in the TUSC1 zone, as defined in the DCD message (see Table 575 in 11.4.1), shall be renumbered consecutively starting from 0.

The pilots in the TUSC1 permutation are regarded as part of the allocation, and as such shall be beamformed in a way that is consistent with the transmission of the allocation's data subcarriers.

The TUSC1 permutation shall only be used within an AAS zone.

8.4.6.1.2.4.1 Symbol structure for TUSC1 subchannels

The TUSC1 symbol structure corresponds to that of the UL PUSC structure as defined in 8.4.6.2.1.

8.4.6.1.2.4.2 Partitioning of subcarriers into TUSC1 subchannels

The partitioning of subcarriers into tiles and tiles into subchannels corresponds to the definitions for the UL PUSC structure as defined in 8.4.6.2.2 with *UL_Permbase* replaced by *IDcell*.

8.4.6.1.2.5 Optional DL tile usage of subchannels—TUSC2

The TUSC2 is similar in structure to the UL PUSC structure defined in 8.4.6.2.5. Each transmission uses 48 data subcarriers as the minimal block of processing. The permutation properties are given in Table 460, Table 461, Table 462, and Table 463. The active subchannels in the TUSC2 zone, as defined in the DCD message (see Table 575 in 11.4.1), shall be renumbered consecutively starting from 0.

The pilots in the TUSC2 permutation are regarded as part of the allocation, and as such shall be beamformed in a way that is consistent with the transmission of the allocation's data subcarriers

The TUSC2 permutation shall only be used within an AAS zone.

8.4.6.1.2.5.1 Symbol structure for TUSC2 subchannels

The TUSC2 symbol structure corresponds to that of the UL optional PUSC structure as defined in 8.4.6.2.5.1.

8.4.6.1.2.5.2 Partitioning of subcarriers into TUSC2 subchannels

The partitioning of subcarriers into tiles and tiles into subchannels corresponds to the definitions for the UL optional PUSC structure as defined in 8.4.6.2.5.2.

8.4.6.1.2.6 TUSC1/TUSC2 support for SDMA

The pilots in an AAS zone with TUSC1 or TUSC2 permutation are regarded as part of the allocation, and as such shall be beamformed in a way that is consistent with the transmission of the allocation's data subcarriers. In an SDMA region, the pilots of each allocation may correspond to a different pilot pattern. The pilot patterns for TUSC1 permutation are as depicted in Figure 263, and the patterns for the TUSC2 permutation are as depicted in Figure 275.

8.4.6.2 Uplink (UL)

The following subclause defines the UL transmission and symbol structure. The UL follows the DL model, therefore it also supports up to three segments.

The UL supports 70 subchannels for PUSC permutation and 96 subchannels for optional PUSC permutation. Each transmission uses 48 data carriers as the minimal block of processing. Each new transmission for the UL commences with the parameters given in Table 455 for PUSC permutation and with the parameters given in Table 460 (in 8.4.6.2.5) for optional PUSC permutation.

Table 455—2048-FFT OFDMA UL subcarrier allocations for PUSC

Parameter	Value	
Number of DC subcarriers	1 (Index 1024, counting from 0)	Index 1024
N_{used}	1681	Number of all subcarriers used within a symbol
Guard subcarriers: Left, Right	184, 183	
TilePermutation	6, 48, 58, 57, 50, 1, 13, 26, 46, 44, 30, 3, 27, 53, 22, 18, 61, 7, 55, 36, 45, 37, 52, 15, 40, 2, 20, 4, 34, 31, 10, 5, 41, 9, 69, 63, 21, 11, 12, 19, 68, 56, 43, 23, 25, 39, 66, 42, 16, 47, 51, 8, 62, 14, 33, 24, 32, 17, 54, 29, 67, 49, 65, 35, 38, 59, 64, 28, 60, 0	Used to allocate tiles to subchannel
$N_{subchannels}$	70	
N_{tiles}	420	
Number of subcarriers per tile	4	Number of all subcarriers used within tile
Tiles per subchannel	6	

Table 456, Table 457, and Table 458 contain parameters for UL PUSC permutations for FFT-1024, FFT-512, and FFT-128, respectively.

Table 456—1024-FFT OFDMA UL subcarrier allocations for PUSC

Parameter	Value	Notes
Number of DC Subcarriers	1	Index 512
N_{used}	841	Number of all subcarriers used within a symbol
Guard Subcarriers: left, right	92, 91	—
TilePermutation	11,19,12,32,33,9,30,7,4,2,13,8,17,23,27, 5,15,34,22,14,21,1,0,24,3,26,29,31,20,25, 16,10,6,28,18	Used to allocate tiles to sub-channels
$N_{subchannels}$	35	—
N_{tiles}	210	—
Number of subcarriers per tile	4	Number of all subcarriers used within tile
Tiles per subchannel	6	—

Table 457—512-FFT OFDMA UL subcarrier allocations for PUSC

Parameter	Value	Notes
Number of DC Subcarriers	1	Index 256
N_{used}	409	Number of all subcarriers used within a symbol
Guard Subcarriers: left, right	52, 51	—
TilePermutation	11,15,10,2,12,9,8,14,16,4,0,5,13,3,6,7,1	Used to allocate tiles to sub-channels
$N_{subchannels}$	17	—
N_{tiles}	102	—
Number of subcarriers per tile	4	Number of all subcarriers used within tile
Tiles per subchannel	6	—

Table 458—128-FFT OFDMA UL subcarrier allocations for PUSC

Parameter	Value	Notes
Number of DC Subcarriers	1	Index 64
N_{used}	97	Number of all subcarriers used within a symbol
Guard Subcarriers: left, right	16, 15	—
PermutationBase0	2, 0, 3, 1	Used to allocate tiles to subchannels
$N_{subchannels}$	4	—
N_{tiles}	24	—
Number of subcarriers per tile	4	Number of all subcarriers used within tile
Tiles per subchannel	6	—

8.4.6.2.1 Symbol structure for subchannel (PUSC)

A slot in the UL is composed of three OFDMA symbols and one subchannel. Within each slot, there are 48 data subcarriers and 24 fixed-location pilots as shown in Table 455.

The subchannel is constructed from six UL tiles. Each tile has four successive active subcarriers, and its configuration is illustrated in Figure 249.

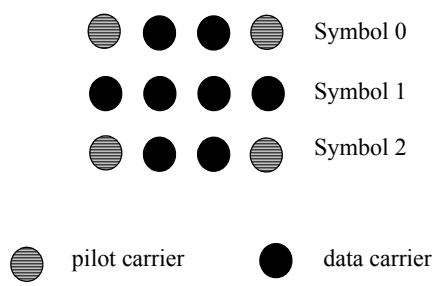

Figure 249—Description of an UL tile

8.4.6.2.2 Partitioning of subcarriers into subchannels in the UL

The usable subcarriers in the allocated frequency band shall be divided into N_{tiles} physical tiles as defined in Figure 249 with parameters from Table 459 (in 8.4.6.2.4). The allocation of physical tiles to logical tiles in subchannels is performed in the following manner:

Logical tiles are mapped to physical tiles in the FFT using Equation (65); for an example, refer to 8.4.6.2.3.

$$Tiles(s, n) = N_{subchannels} \cdot n + (Pt[(s+n) mod\ N_{subchannels}] + \text{UL\_PermBase}) mod\ N_{subchannels} \quad (65)$$

where

$Tiles(s, n)$ is the physical tile index in the FFT with tiles being ordered consecutively from the most negative to the most positive used subcarrier (0 is the starting tile index)

n is the tile index 0…5 in a subchannel
Pt is the tile permutation
s is the subchannel number in the range $0 \ldots N_{subchannels}-1$
UL_PermBase is an integer value which is assigned by a management entity
$N_{subchannels}$ is the number of subchannels for the FFT size given in Table 456, Table 457, and Table 458

After mapping the physical tiles in the FFT to logical tiles for each subchannel, the data subcarriers per slot are enumerated by the following process:

a) After allocating the pilot carriers within each tile, indexing of the data subcarriers within each slot is performed starting from the first symbol at the lowest indexed subcarrier of the lowest indexed tile, continuing in an ascending manner through the subcarriers in the same symbol, then going to the next symbol at the lowest indexed data subcarrier, and so on. Data subcarriers shall be indexed from 0 to 47.
b) The mapping of data onto the subcarriers shall follow Equation (66). This equation calculates the subcarrier index (as assigned in item 1) to which the data constellation point is to be mapped.

$$Subcarrier(n, s) = (n + 13 \cdot s) mod N_{subcarriers} \tag{66}$$

where

$Subcarrier(n, s)$ is the permutated subcarrier index corresponding to data subcarrier n is subchannel s
n is a running index 0…47, indicating the data constellation point
s is the subchannel number
$N_{subcarriers}$ is the number of subcarriers per slot

For example, for subchannel 1 (s = 1), the first data constellation point (n = 0) is mapped onto subcarrier (0,1) = 13, where 13 is the subcarrier with index 13 according to step a) in this subclause. Considering the PUSC tile structure, it can be seen that this is the second indexed subcarrier on the second symbol within the slot. Similarly, for subchannel 3, the ninth data constellation point (n = 8) is mapped onto subcarrier (8, 3) = 47. According to step a), this is the last indexed subcarrier of the third symbol within the slot.

Subcarrier enumeration shall not be applied to the slots in the UL-MAP indicated by either UIUC = 0, UIUC = 11 (Extended-2 UIUC) with Type=8, UIUC = 12, or UIUC = 13.

8.4.6.2.3 UL permutation example

To illustrate the use of the permutations, an example is provided to clarify the operation of the permutation formula, Equation (65).

The tiles used for subchannel s = 3 in *UL_PermBase* = 2 are computed.

The relevant parameters characterizing the UL are, therefore, taken from Table 455:

— Number of subchannels: $N_{subchannels}$ = 70
— Number of subcarriers in each OFDMA symbol = 24
— Number of data subcarriers in each slot: $N_{subcarriers}$ = 48
— TilePermutation = {6, 48, 58, 57, 50, 1, 13, 26, 46, 44, 30, 3, 27, 53, 22, 18, 61, 7, 55, 36, 45, 37, 52, 15, 40, 2, 20, 4, 34, 31, 10, 5, 41, 9, 69, 63, 21, 11, 12, 19, 68, 56, 43, 23, 25, 39, 66, 42, 16, 47, 51, 8, 62, 14, 33, 24, 32, 17, 54, 29, 67, 49, 65, 35, 38, 59, 64, 28, 60, 0}

Using Equation (65),

a) The basic series of 70 numbers is { 6, 48, 58, 57, 50, 1, 13, 26, 46, 44, 30, 3, 27, 53, 22, 18, 61, 7, 55, 36, 45, 37, 52, 15, 40, 2, 20, 4, 34, 31, 10, 5, 41, 9, 69, 63, 21, 11, 12, 19, 68, 56, 43, 23, 25, 39, 66, 42, 16, 47, 51, 8, 62, 14, 33, 24, 32, 17, 54, 29, 67, 49, 65, 35, 38, 59, 64, 28, 60, 0}.

b) Apply the permutation due to the selection of the subchannel (s), rotate three times: { 57, 50, 1, 13, 26, 46, 44, 30, 3, 27, 53, 22, 18, 61, 7, 55, 36, 45, 37, 52, 15, 40, 2, 20, 4, 34, 31, 10, 5, 41, 9, 69, 63, 21, 11, 12, 19, 68, 56, 43, 23, 25, 39, 66, 42, 16, 47, 51, 8, 62, 14, 33, 24, 32, 17, 54, 29, 67, 49, 65, 35, 38, 59, 64, 28, 60, 0, 6, 48, 58}.

c) Take the first six numbers, and add the *UL_PermBase* (perform modulo operation if needed): {59, 52, 3, 15, 28, 48}.

d) Finally, add the appropriate shift: {59, 122, 143, 225, 308, 398}.

8.4.6.2.4 Partition a slot to mini-subchannels

Mini-subchannels can be applied to PUSC or optional PUSC UL permutations, in which an UL slot is composed of six tiles. Mini-subchannels are created by concatenating multiples of two, three, or six slots and allocating traffic for more than one SS on this concatenation by a subdivision of the tiles. Table 459 shows the four possibilities for slot partitioning into mini-subchannels. The tile indices are those referred to in Equation (65) for the mandatory UL permutation or in Equation (68) (in 8.4.6.2.5.2) for the optional UL permutation.

Table 459—Slot partitioning into mini-subchannels

Ctype	Number of concatenated slots	Number of mini-subchannels	Mini-subchannel index	Tile allocation as a function slot index in the concatenation					
				0	1	2	3	4	5
00	2	2	0	0,1,2	3,4,5				
			1	3,4,5	0,1,2				
01	2	2	0	0,2,4	0,2,4				
			1	1,3,5	1,3,5				
10	3	3	0	0,1	2,3	4,5			
			1	4,5	0,1	2,3			
			2	2,3	4,5	0,1			
11	6	6	0	0	1	2	3	4	5
			1	5	0	1	2	3	4
			2	4	5	0	1	2	3
			3	3	4	5	0	1	2
			4	2	3	4	5	0	1
			5	1	2	3	4	5	0

When mini-subchannels of order *M* are indicated in the map, the allocation shall be a multiple of *M* slots, and shall not exceed one full subchannel, i.e., at most one slot will be allocated in each OFDMA symbol.

Allocating tiles to mini-subchannels shall be done as follows: The slots in the allocation shall be numbered in time-first order in the same order as the slots are allocated in the map. The number of slot modulu M is used as index to Table 459 and determines which tiles are allocated to the SS.

Mapping data to mini-subchannels shall be done as follows: The FEC, repetition, and constellation mapping shall be applied as if the allocation was of duration/M slots (where duration is the number of slots specified in the map). The resulting data subcarriers shall be enumerated in the tiles allocated to each SS in a frequency-first order beginning from the tile with the smallest symbol number and smallest frequency. The subcarrier rotation defined in Equation (66) [step b) of 8.4.6.2.2] shall not be applied to mini-subchannels; instead, enumeration of the data subcarriers shall be performed as indicated by Equation (67), which sets the order to which the mapping of the data onto the subcarriers shall be performed.

$$P(n) = \left(n + 13 \cdot \left\lfloor \frac{n}{48} \right\rfloor\right) \bmod 48 + 48 \cdot \left\lfloor \frac{n}{48} \right\rfloor \tag{67}$$

where

$P(n)$ physical data subcarrier index (n)
n is a running index 0… used data subcarriers, which represents the logical subcarrier index

The mini-subchannels are mapped by the UL map like normal slots; except that the mapping is done by the Mini-Subchannel Allocation IE (see 8.4.5.4.8).

8.4.6.2.5 Additional optional symbol structure for PUSC

The additional optional subchannel structure for the UL supports 96 subchannels where a subchannel consists of 48 data carriers and 6 pilot carriers. Each new transmission for the UL commences with the parameters as given in Table 460, Table 461, Table 462, and Table 463, according to the FFT size.

Table 460—OFDMA UL subcarrier allocations

Parameter	Value
Number of DC Subcarriers	1 (Index 1024, counting from 0)
N_{used}	1729
Guard Subcarriers: Left, Right	160, 159
$N_{subchannels}$	96
N_{tiles}	576
Number of subcarriers per tile	3
Tiles per subchannel	6
Number of data subcarriers per slot	48

Table 461, Table 462, and Table 463 specify the Optional PUSC UL subcarrier allocation for 1024, 512, and 128 FFT sizes, respectively.

Table 461—Optional 1024-FFT OFDMA UL subcarrier allocations

Parameters	Value	Notes
Number of DC Subcarriers	1	—
Number of Guard Subcarriers, left	80	—
Number of Guard Subcarriers, right	79	—
Number of Used Subcarriers (N_{used}) (including all possible allocated pilots and the DC subcarrier)	865	—
Number of Subchannels ($N_{subchannels}$)	48	—
Number of Tiles (N_{tiles})	288	—
Number of Subcarriers per Tile	3	—
Tiles per Subchannel	6	—
Number of Data Subcarriers per slot	48	—

Table 462—Optional 512-FFT OFDMA UL subcarrier allocations

Parameters	Value	Notes
Number of DC Subcarriers	1	—
Number of Guard Subcarriers, left	40	—
Number of Guard Subcarriers, right	39	—
Number of Used Subcarriers (N_{used}) (including all possible allocated pilots and the DC subcarrier)	433	—
Number of Subchannels ($N_{subchannels}$)	24	—
Number of Tiles (N_{tiles})	144	—
Number of Subcarriers per Tile	3	—
Tiles per Subchannel	6	—
Number of Data Subcarriers per slot	48	—

Table 463—Optional 128-FFT OFDMA UL subcarrier allocations

Parameters	Value	Notes
Number of DC Subcarriers	1	—
Number of Guard Subcarriers, left	10	—
Number of Guard Subcarriers, right	9	—
Number of Used Subcarriers (N_{used}) (including all possible allocated pilots and the DC subcarrier)	109	—
Number of Subchannels ($N_{subchannels}$)	6	—
Number of Tiles (N_{tiles})	36	—
Number of Subcarriers per Tile	3	—
Tiles per Subchannel	6	—
Number of Data Subcarriers per slot	48	—

8.4.6.2.5.1 Symbol structure for subchannel

A slot in the UL is composed of three OFDMA symbols and one subchannel. Within each slot, there are 48 data subcarriers and six fixed-location pilots. The subchannel is constructed from six UL tiles. Each tile has three successive active subcarriers. Its configuration is illustrated in Figure 250.

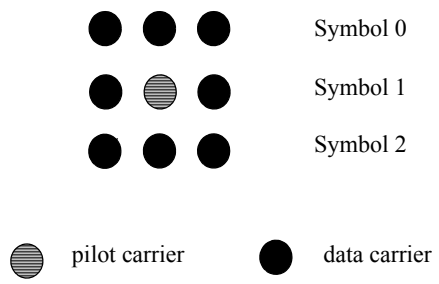

Figure 250—Description of an UL tile

8.4.6.2.5.2 Partitioning of subcarriers into subchannels in the UL

To allocate the subchannels, N_{used} subcarriers excluding DC subcarrier are partitioned into tiles, which are a 3x3 frequency-time block containing 9 tones (1 pilot tones and 8 data tones). The whole frequency band is partitioned into groups of contiguous tiles. Each subchannel consists of 6 tiles, each of which is chosen from different groups. The value of N_s is equal to $N_{tiles}/18$. N_{tiles} is the number of tiles in the whole frequency band for each FFT size, which is specified in Table 460, Table 461, Table 462, and Table 463.

There are 18 groups in the whole frequency band, and the number of tiles in a group is N_s. In order to make a subchannel, 6 groups at equal distance (3 groups away from each) are chosen, and each of 6 tiles is selected from each group.

The exact partitioning into subchannels is according to Equation (68), called the UL permutation formula.

$$Tiles(s,m) = \begin{cases} 3N_s \cdot m + N_s \cdot S + \lfloor s' + P_{1,c_1}(m') + P_{2,c_2}(m') \rfloor, 0 < c_1, c_2 < N_s \\ 3N_s \cdot m + N_s \cdot S + \lfloor s' + P_{1,c_1}(m') \rfloor, c_1 \neq 0, c_2 = 0 \\ 3N_s \cdot m + N_s \cdot S + \lfloor s' + P_{2,c_2}(m') \rfloor, c_1 = 0, c_2 \neq 0 \\ 3N_s \cdot m + N_s \cdot S + s', \text{c1=0, c2=0} \end{cases} \quad (68)$$

where

$Tile(s, m)$ is the tile index of the m-th tile in subchannel s

S is $S = \lfloor s/N_s \rfloor, s' = s \cdot mod(N_s)$

m is the tile-in-subchannel index from the set [0~5], $m' = m \bmod(N_s-1)$

s is the index number of a subchannel from the set [0~3N_s–1]

$P_{1,c_1}(j)$ is the j-th element of the sequence obtained by rotating basic permutation sequence P_1 cyclically to the left c_1 times. See Table 456.

$P_{2,c_2}(j)$ is the j-th element of the sequence obtained by rotating basic permutation sequence P_2 cyclically to the left c_2 times. See Table 456.

c_1 is UL_PermBase mod(N_s)

c_2 is $\lfloor UL\_\text{PermBase}/N_s \rfloor$

In Equation (68), the operation in [ ] is over GF(2^n). In GF(2^n), addition is binary XOR operation. For example, 13 + 4 in GF(2^n) is [$(1101)_2$ XOR $(0100)_2$] = $(1001)_2$ = 9, where $(x)_2$ represents binary expansion of x.

After allocating the tiles for each subchannel, the data subcarriers of each subchannel are enumerated by the same procedure used for UL PUSC in 8.4.6.2.2.

8.4.6.2.6 Data subchannel rotation scheme

A rotation scheme shall be applied per each OFDMA slot duration in any zone, except zones marked as AAS zone, optional PUSC zone (8.4.6.2.5), or zone using the adjacent-subcarriers permutations (8.4.6.3). Slot duration is defined in 8.4.3.1. On each slot duration, the rotation scheme shall be applied to all UL subchannels that belong to the segment (see 8.4.4.6), except the subchannels indicated in the UL-MAP by UIUC = 0, UIUC = 11 (Extended-2 UIUC) with Type = 8, UIUC = 13, or UIUC = 12. The rotation scheme is defined by applying the following rules:

a) Per OFDMA slot duration, pick only subchannels that are not indicated by either UIUC = 0, UIUC = 11 (Extended-2 UIUC) with Type = 8, UIUC = 12, or UIUC = 13 (as defined above). Renumber these subchannels contiguously so that the lowest numbered physical subchannel is renumbered with 0. The total number of subchannels picked shall be designated N_{subchn}.

b) The mapping function defined by rule a) shall define a function, f, so that *temp1_subchannel_number = f(old_subchannel_number).*

c) Mark the first UL OFDMA slot duration for each permutation zone with the slot index S_{idx} = 0. Within the permutation zone, increase S_{idx} by 1 in every slot duration so that subsequent slots are numbered 1,2,3..., etc.
In FDD/H-FDD, if UL Zone Switch IE is used for the last uplink zone in the first subframe (UL Group2) with H-FDD Inter-UL_gap Allocation = 1, the slot index S_{idx} shall be incremented by 1 in every slot duration up to the last slot in-between two consecutive uplink subframes. If H-FDD Over_subframe Allocation is set to 1 in the UL Zone Switch IE in FDD/H-FDD, the slot index S_{idx} shall be reset to 0 at the beginning of the first slot duration of the second subframe (UL Group1).

d) Apply the following formula:
$temp2\_subchannel\_number = (temp1\_subchannel\_number + 13 \times S_{idx}) \bmod N_{subchan}$

e) To get the new subchannel number, apply the following formula:
$new\_subchannel\_number = f^{-1}(temp2\_subchannel\_number)$
where $f^{-1}(.)$ is the inverse mapping of the mapping defined in rule b).

f) For subchannels in the UL-MAP indicated by either UIUC = 0, UIUC = 11 (Extended-2 UIUC) with Type = 8, UIUC=12, or UIUC=13, *new_subchannel_number = old_subchannel_number.*

g) The *new_subchannel_number* shall replace the *old_subchannel_number* in each allocation defined by 8.4.3.4 where the *new_subchannel_number* is the output of the rotation scheme and the *old_subchannel_number* is the input of the rotation scheme.

8.4.6.2.7 Optional UL channel sounding in TDD systems

8.4.6.2.7.1 Channel sounding

This subclause describes a signaling mechanism where an MS transmits channel sounding waveforms on the UL to enable the BS to determine the BS-to-MS channel response under the assumption of TDD reciprocity. Only CSIT capable MSs (as indicated by the SBC-REQ message, see 11.8) shall support this signaling. This signaling methodology enables the use of closed loop transmission strategies. Closed Loop transmission strategies use knowledge of the channel at the transmitter to improve link performance, reliability, and range. This methodology also provides a means for the BS to determine the quality of the channel response across the signal bandwidth for the purpose of selecting the best portion of the band on which to transmit. The signaling described in this subclause enables the BS to measure the UL channel response and translate the measured UL channel response to an estimated DL channel response when the Tx and Rx hardware are appropriately calibrated. To support DL channel estimation in a mobile environment, an MS may be instructed to transmit sounding signals periodically. The first sounding symbol is transmitted in the frame containing the relevant sounding instruction if Sounding_Relevance is set to 0. The Sounding_Relevance_Flag indicates whether the Sounding relevance applies to all CIDs in the sounding command or whether a different Sounding Relevance can be applied individually for each CID in the sounding command. For each sounding assignment being made in this IE, the Sounding Relevance cannot be set to 0 unless the respective SS has a sounding response time capability less than or equal to the time between the completion of the transmission of the UL Sounding Command IE and the beginning of its respective sounding assignment.

In order to enable UL sounding, in UL-MAP, a BS transmits UIUC = 13 with the PAPR_Reduction_Safety_and_Sounding_Zone_Allocation_IE() (see Table 378) to indicate the allocation of an UL sounding zone within the frame. The Sounding Zone is a region of one or more OFDMA symbol intervals in the UL frame that is used by the MS to transmit sounding signals to enable the BS to rapidly determine the channel response between the BS and the MS. The BS may command an MS to transmit a sounding signal (defined below) at one or more OFDMA symbols within the sounding zone by transmitting the UL-MAP message UL_Sounding_Command_IE() to provide detailed sounding instructions to the MS. If periodic sounding is instructed by the BS, it is the responsibility of the BS to continue to signal the PAPR_Reduction_Safety_and_Sounding_Zone_Allocation_IE() in every appropriate frame. The UL_Sounding_Command_IE() of type A instructs the MS to transmit the specific sounding signal(s) at one or more specific symbol interval(s) within the sounding zone and specifies the specific sounding frequency band(s) to be occupied within each of these sounding symbol(s). The UL_Sounding_Command_IE() of type B is similar to the UL_Sounding_Command_IE() of type A except the frequency band(s) are allocated according to a specified DL subcarrier permutation. When multiple sounding zones are defined in the UL-MAP or the UCD, the field “sounding zone indicator” is used to explicitly specify for which sounding zone this sounding command IE is referring. Sounding zones are numbered (starting from zero) according to the order in which they appear in the UL MAP or the UCD.

For the purposes of sounding the UL of a CSIT capable MS of type A, the OFDMA frequency bandwidth within the Sounding Zone is partitioned into nonoverlapping sounding frequency bands, where each sounding frequency band contains 18 consecutive OFDMA subcarriers. For the 2048-FFT size, the Sounding Zone, therefore, contains maximum of 1728/18 = 96 sounding frequency bands, where 1728 is the number of usable subcarriers (N_{used}). For other FFT sizes, the sounding bands are also 18 subcarriers wide, and the number of possible sounding bands across the signal bandwidth varies accordingly.

As shown in Table 464, the sounding instructions for CSIT type A include an assigned set of contiguous sounding frequency bands (called the sounding allocation). The sounding frequency bands are nondistributed for CSIT capability type A and are distributed according to a specified DL permutation (for example, PUSC) for CSIT capability type B. For CSIT capability B, distributing the sounding frequency bands according to the optional FUSC is supported only for MSs that support the optional FUSC permutation.

Additionally, for CSIT capability A, the sounding instructions in UL_Sounding_Command_IE() contain two alternate methods of maintaining signal orthogonality between multiple multiplexed MS sounding transmissions. The first methodology is called "cyclic shift separability" and involves the MS occupying all subcarriers within the sounding allocation. With this methodology, multiple MSs use the same sounding sequence (defined below), but each uses a different frequency-domain phase shift to multiply that underlying sounding sequence. In the second methodology, the MS occupies a decimated set of subcarriers (e.g., every 16th subcarrier). Multiple MSs can occupy the same sounding allocation, but each MS would use a set of nonoverlapping subcarriers within the sounding allocation.

The sounding instructions in UL_Sounding_Command_IE() of type B does not allow for multiplexing of sounding transmissions of multiple MSs over the same bands. (See Table 464.)

Table 464—UL Sounding Command IE format

Syntax	Size (bit)	Notes
UL_Sounding_Command_IE(){	—	—
Extended-2 UIUC	4	UL_Sounding_Command_IE() = 0x04
Length	8	*variable*
Sounding_Type	1	0 = Type A 1 = Type B
Send Sounding Report Flag	1	—
Sounding_Relevance_Flag	1	0 = Sounding relevance is the same for all CIDs 1 = Sounding relevance is specified for each CID
if(Sounding_Relevance_Flag == 0) {	—	—
Sounding_Relevance	1	0 = All CIDs respond in the frame carrying the instruction 1 = All CIDs respond in next frame
} else {	—	—
Reserved	1	Shall be set to zero
}	—	—

Table 464—UL Sounding Command IE format *(continued)*

Syntax	Size (bit)	Notes
Sounding zone indicator	2	Indicates for which sounding zone this IE is relevant
Include additional feedback	2	0b00 = No additional feedback 0b01 = Include channel coefficients (see 8.4.6.2.7.3) 0b10 = Include received pilot coefficients 0b11 = Include feedback message
if (Sounding_Type == 0) {	—	—
Num_Sounding_symbols	3	Total number of sounding symbols being allocated, from 1 (0b000) to $2^3 = 8$ (0b111)
Reserved	1	Shall be set to zero
for(i = 0; i < Num_Sounding_symbols; i++){	—	—
Separability Type	1	0: occupy all subcarriers in the assigned bands 1: occupy decimated subcarriers
if (Separability type == 0) {	—	(Using cyclic shift separability)
Max Cyclic Shift Index P	3	0b000: P = 4 0b001: P = 8 0b010: P = 16 0b011: P = 32 0b100: P = 9 0b101: P = 18 0b110–0b111: *Reserved*
Reserved	1	Shall be set to zero
} else {	—	(Using decimation separability)
Decimation Value *D*	3	Sound every D^{th} subcarrier within the sounding allocation. Decimation value D is 2 to the power of (1 plus this value), hence 2,4,8,… up to maximum of 128, except for the out-of-range value of 0b111 which means decimation of 5.
Decimation offset randomization	1	0 = no randomization of decimation offset 1 = decimation offset pseudo-randomly determined
}	—	—
Sounding symbol index	3	Symbol index within the Sounding Zone, from 1 (value 0b000) to $2^3 = 8$ (value 0b111)
Number of CIDs	7	Number of CIDs sharing this sounding allocation
Reserved	1	Shall be set to zero
for (j = 0; j < Num. of CIDs; j++) {	—	—
Shorted basic CID	12	12 LSBs of the MS basic CID value

Table 464—UL Sounding Command IE format *(continued)*

Syntax	Size (bit)	Notes
Power Assignment Method	2	0b00 = Equal power 0b01 = *Reserved* 0b10 = Interference dependent; per subcarrier power limit 0b11 = Interference dependent; total power limit
Power boost	1	0 = No power boost 1 = Power boost
Multi-Antenna Flag	1	0 = MS sounds first antenna only 1 = MS sounds all antennas
Allocation Mode	1	0: Normal 1: Band AMC
If (Allocation Mode == 1) {	—	—
Band bit Map	12	See logical band defined in 8.4.6.3.2
Reserved	2	Shall be set to zero
} Else {	—	—
Starting Frequency Band	7	Out of 96 bands at most (FFT size dependent)
Number of frequency bands	7	Contiguous bands used for sounding
}	—	—
If (Sounding Relevance Flag == 1) {	—	—
Sounding_Relevance	1	—
} else {	—	—
Reserved	1	Shall be set to zero
}	—	—
if (Separability Type == 0) {	—	—
Cyclic time shift index *n*	5	Specifies a frequency-domain phase ramp to be multiplied to the Golay Sequence as shown in Equation (70). The value of n ranges from 0 to P–1
} else {	—	—
Decimation Offset d	6	Relative starting offset position for the first sounding occupied subcarrier in the sounding allocation
If (Include additional feedback == 0b01) {	—	—
Use same symbol for additional feedback	1	0 = The additional feedback is sent in the symbol(s) following the allocated sounding symbol. 1 = The additional feedback is sent in the same symbol as the allocated sounding symbol.
Reserved	2	Shall be set to zero
} else {	—	—

Table 464—UL Sounding Command IE format *(continued)*

Syntax	Size (bit)	Notes
Reserved	3	Shall be set to zero
}	—	—
}	—	—
Periodicity	3	0b000 = Single command, not periodic, or terminate periodicity. Otherwise, repeat sounding once per *r* frames, where $r = 2^{(n-1)}$, where n is the decimal equivalent of the periodicity field.
}	—	—
}	—	—
} else {	—	—
Permutation	3	0b000 = PUSC perm 0b001 = FUSC perm 0b010 = Optional FUSC perm 0b011 = PUSC-ASCA 0b100 = TUSC1 0b101 = TUSC2 0b110 = AMC (2x3) 0b111 = *Reserved*
DL_PermBase	6	—
Num_Sounding_symbols	3	—
for (*i* = 0; *i* < Num_Sounding_symbols; *i*++){	—	—
Number of CIDs	7	—
Reserved	1	Shall be set to zero
for (*j* = 0; *j* < Number of CIDs; *j*++) {	—	—
Shortened basic CID	12	12 LSBs of the MS basic CID value
If(Sounding_Relevance_Flag == 1){	—	—
Sounding_Relevance	1	0 = Respond in the frame carrying the instruction 1 = Respond in next frame
Reserved	3	Shall be set to zero
}	—	—
Subchannel offset	7	The lowest index subchannel used for carrying the burst, starting from subchannel 0
Power boost	1	0 = No power boost 1 = Power boost
Number of subchannels	3	The number subchannels with subsequent indexes, used to carry the burst
Periodicity	3	0b000 = Single command, not periodic, or terminate periodicity. Otherwise, repeat sounding once per *r* frames, where $r = 2^{(n-1)}$, where *n* is the decimal equivalent of the periodicity field.

Table 464—UL Sounding Command IE format *(continued)*

Syntax	Size (bit)	Notes
Power Assignment Method	2	0b00 = Equal power 0b01 = *Reserved* 0b10 = Interference dependent; per subcarrier power limit 0b11 = Interference dependent; total power limit
}	—	—
}	—	—
}	—	—
Padding	*variable*	Pad IE to octet boundary. Bits shall be set to 0
}	—	—

If an MS receives a UL Sounding Command IE with Periodicity = 0b000, the MS currently has a periodic sounding allocation and the MS received sounding command IE, which refers to the same frame as the active periodic sounding allocation with parameters identical to those of the active periodic sounding allocation:

— Sounding type
— Separability type
— Max cyclic shift index P (if Separability type = 0)
— Decimation value D (if Separability type = 1)
— Decimation offset randomization (if Separability type = 1)
— Sounding symbol index
— Shorted basic CID
— Allocation mode
— Band bit map (if Allocation mode = 1)
— Starting frequency band (if Allocation mode = 0)
— Number of frequency bands (if Allocation mode = 0)
— Cyclic time shift index m (if Separability type = 0)
— Decimation offset d (if Separability type = 1)

then the MS shall terminate the active periodic sounding allocation. Otherwise, the MS shall consider the UL Sounding Command IE as a definition of new non-periodic sounding allocation.

If the field “Include Channel Coefficients” is enabled, then the UL Sounding Command IE enables the MS to perform the direct transmission of DL channel coefficients to the BS along with the UL sounding waveform. For the description of the direct channel coefficient encoding method, see 8.4.6.2.7.3.

For CSIT capability A, the indices d or n are associated with the first antenna of the MS. If multi-antenna flag equals 1 then the i-th antenna of the MS corresponds to index $d + i - 1$ or to $n + i - 1$ ($i > 0$) respectively. If multi-antenna flag equals 0 then only the first antenna performs sounding. The BS shall assign indices to different CIDs so that overlapping of indices is avoided.

Define b_k as the complex coefficients modulating all subcarriers in the sounding symbol, $0 \le k \le N_{used} - 1$ (N_{used} is the value assigned to Band AMC permutations for the respective FFT size), such that the signal transmitted by the MS is defined by Equation (69).

$$s(t) \equiv Re\left\{ e^{j2\pi f_c t} \bullet \sum_{k=0,\, k \neq \frac{N_{used}-1}{2}}^{N_{used}-1} b_k \bullet e^{j2\pi\left(k - \frac{N_{used}-1}{2}\right)\Delta f(t - T_g)} \right\} \tag{69}$$

For CSIT capability A, if the separability type is zero, then the sequence used by a Tx device (MS or MS antenna) associated with the *n*-th index is determined according to Equation (70).

$$b_k = \begin{cases} 2 \bullet \left(\frac{1}{2} - G([k + u + offset_D(fft)]mod2048)\right) \bullet e^{-j\frac{2\pi kn}{P}} & k \in B, k \neq \frac{N_{used}-1}{2} \\ 0 & otherwise \end{cases} \tag{70}$$

where

k	is the subcarrier index ($0 \le k \le L_s - 1$)
N_{used}	is the number of usable subcarriers in the sounding symbol
$G(x)$	is the low PPR Golay sequence as defined in Table 465 ($0 \le x \le 2047$)
P	is the max cyclic shift index (from the sounding instructions)
n	is the assigned cyclic time shift index (also from the sounding instructions), which ranges from 0 to P–1
B	is the group of allocated subcarriers/bands according to the sounding instructions
u	is a shift value defined in the PAPR reduction, and safety zone, and sounding zone IE ($0 \le u \le 127$)
fft	is the FFT size used
$offset_D(fft)$	is an FFT size specific offset as defined in Table 466

Table 465—Golay sequence of length 2048 bits

0xEDE2	0xED1D	0xEDE2	0x12E2	0xEDE2	0xED1D	0x121D	0xED1D	0xEDE2	0xED1D	0xEDE2	0x12E2
0x121D	0x12E2	0xEDE2	0x12E2	0xEDE2	0xED1D	0xEDE2	0x12E2	0xEDE2	0xED1D	0x121D	0xED1D
0x121D	0x12E2	0x121D	0xED1D	0xEDE2	0xED1D	0x121D	0xED1D	0xEDE2	0xED1D	0xEDE2	0x12E2
0xEDE2	0xED1D	0x121D	0xED1D	0xEDE2	0xED1D	0xEDE2	0x12E2	0x121D	0x12E2	0xEDE2	0x12E2
0x121D	0x12E2	0x121D	0xED1D	0x121D	0x12E2	0xEDE2	0x12E2	0xEDE2	0xED1D	0xEDE2	0x12E2
0x121D	0x12E2	0xEDE2	0x12E2	0xEDE2	0xED1D	0xEDE2	0x12E2	0xEDE2	0xED1D	0x121D	0xED1D
0xEDE2	0xED1D	0xEDE2	0x12E2	0x121D	0x12E2	0xEDE2	0x12E2	0xEDE2	0xED1D	0xEDE2	0x12E2
0xEDE2	0xED1D	0x121D	0xED1D	0x121D	0x12E2	0x121D	0xED1D	0xEDE2	0xED1D	0x121D	0xED1D
0x121D	0x12E2	0x121D	0xED1D	0x121D	0x12E2	0xEDE2	0x12E2	0x121D	0x12E2	0x121D	0xED1D
0xEDE2	0xED1D	0x121D	0xED1D	0xEDE2	0xED1D	0xEDE2	0x12E2	0xEDE2	0xED1D	0x121D	0xED1D
0x121D	0x12E2	0x121D	0xED1D	0xEDE2	0xED1D	0x121D	0xED1D				

Comment to Table 465: hexadecimal series should be read as a sequence of bits where each 16 bit word is started at the MSB and ends at the LSB where the second word MSB follows. First bit of sequence is referenced as offset 0.

For CSIT type A, if the separability type is one, then the occupied subcarriers are decimated (where D is the Decimation value) starting with offset d relative to the first used subcarrier ($k = 0$). The occupied subcarriers

for each transmit device shall be modulated by BPSK symbols extracted from the Golay sequence according to Equation (71).

$$b_k = \begin{cases} 2 \bullet \left(\frac{1}{2} - G([k + u + offset_D(fft)] mod 2048)\right) & k \in B, k \neq \frac{N_{used} - 1}{2}, k \bmod \mathrm{D} = g \\ 0 & \text{otherwise} \end{cases} \quad (71)$$

where

- k is the subcarrier index ($0 \le k \le N_{used} - 1$, N_{used} is the number of usable subcarriers in the sounding symbol)
- $G(x)$ is the low PAPR Golay sequence as defined in Table 465 ($0 \le x \le 2047$)
- fft is the FFT size used
- u is a shift value defined in the PAPR reduction, and safety zone, and sounding zone allocation IE ($0 \le u \le 127$)
- $offset_D(fft)$ is an FFT size specific offset as defined in Table 466
- B is the group of all allocated subcarriers/bands according to the sounding instructions
- D is the decimation value (from the sounding command)
- g is the actual decimation offset (as defined below)

Let d be the value of the decimation offset d plus the relative offset according to the MS antenna number (when multi-antenna flag equals 0, then only the first antenna does sounding). If Decimation Offset Randomization equals 0, then $g = d$, otherwise $g = ((p((IDcell + Frame\ Number)\ \mathrm{mod}32) + d)\mathrm{mod}D$, where $p(x)$ is the value in PermutationBase as defined by Table 446 (in 8.4.6.1.2.2) at the location x. The first subcarrier to be occupied is located at the gth subcarrier. The pseudo-random cyclic shift of the decimation offset may be used to combat inter-cell interference. On the other hand, when this pseudo-random cyclic shift is not used, then an alternative strategy for combating inter-cell interference involves assigning each neighboring cell/sector a set of decimation offsets that is different from those used by neighboring cells/ sectors.

Table 466—Offsets in the Golay sequences

FFT size	Offset	PAPR
2048	30	6.3
1024	60	6.1
512	542	5.8
128	859	5.1

The three periodicity bits indicate whether the MS is to periodically repeat the sounding waveforms in subsequent sounding zone without having to receive a subsequent UL_Sounding_Command_IE(). Setting the periodicity bits to 0b000 has two meanings: Ordinarily, the 0b000 setting means a single sounding command with no periodicity. However, if periodic sounding is being performed by a specified MS, then the 0b000 setting means the specified MS shall stop all sounding over the specified OFDMA symbol.

When the MS is sounding with CSIT capability B, the pilot subcarriers shall be BPSK modulated with their values corresponding to the sequence $s_u(k)$, where $k = 0$ is associated with the first occupied subcarrier.

Sequence to subcarrier mapping is done in physical order after collecting all subcarrier index belonging to the allocated subchannels.

If Send Sounding Report Flag is set to one, then any sounding IE (type A or B) encompasses an additional implicit instruction, according to which the MS shall report the average of the DL SINR at the neighborhood of the pilot subcarriers. This instruction is equivalent to a Report command with parameter Channel Type request equal to 0b11. A CSIT capable MS (of type A or type B) shall respond with the appropriate REP-RSP() message on the UL (see also 11.11 and 11.12) within the same frame used to convey the relevant sounding IE. It is the responsibility of the BS to allocate enough bandwidth to support the proper transmission of this REP-RSP() message. In case a periodic sounding is required, a periodic REP-RSP() shall be sent.

For each occupied subcarrier in a sounding symbol, the SINR at the MS is estimated based on a non-beamformed transmission that corresponds to the DL preamble at the first symbol of the frame. The average SINR reported is the average of those estimates. An MS that transmits over multiple sounding symbols shall address the last symbol in the region for that matter.

If the send sounding report flag is set to zero, then no reports are required to be sent by the specified MSs.

8.4.6.2.7.2 Power assignment

If inside UL_Sounding_Command_IE() the power assignment method field is set to 0b00 then the mobile shall transmit all pilots with equal power. In general, the transmission power is according to previous commands of the power control mechanism (see 8.4.10.3).

If the power assignment method is 0b10, then the power allocated to each pilot shall be proportional to

$$Q = \frac{1}{\sigma_k^2}$$

where σ_k^2 is the estimated absolute interference level at the vicinity of the *k*-th pilot subcarrier (without normalization to received signal strength at each OFDMA tone). The Tx power shall be normalized so that the maximal power over all tones is the same as the power density of regular data transmission.

If the power assignment method is set to 0b11, then the power allocated to each pilot is set proportional to

$$Q = min\{10, max\{0.1, \frac{\hat{\sigma}^2}{\sigma_k^2}\}\}$$

where $\hat{\sigma}^2$ is the average interference level over the entire spectrum associated with the channel sounding command. The Tx power shall be normalized so that the average power per tone is the same as the power density of regular data.

In both cases, an additional power boost of 3 dB shall be applied if the field power boost is set on.

8.4.6.2.7.3 Direct transmission of DL channel coefficients

If the Include Additional Feedback field is set to 0b01, then the UL Sounding Command IE() enables the MS to perform the direct transmission of DL channel coefficients to the BS along with the UL sounding waveform. This functionality provides DL channel state information to the BS in both FDD systems and TDD systems in which BS array transceiver calibration is not implemented. With this functionality enabled, DL channel coefficients are encoded as described below and are transmitted in one or more sounding zone symbols that immediately follow each symbol being used to transmit UL sounding waveforms. In this case, the UL sounding waveform is used by the BS to estimate the UL channel so that the DL channel coefficients transmitted by the MSs can be estimated by the BS. The channel coefficients can then be used to enable closed-loop transmission on the DL.

There are two cases depending on the value of the separability type field. First, if separability type is 0 (cyclic shift separability in the sounding waveform), then a single additional symbol follows each sounding symbol being allocated with the UL_Sounding_Command_IE(). In that additional symbol, an MS antenna that transmits sounding in the sounding symbol will transmit an encoded channel coefficient waveform that occupies the same sounding bands allocated for the sounding waveform. The encoded waveform for the uth MS (where u is the cyclic shift index in the UL Sounding Command) is defined for two cases: The first case is for where the MS has a single Tx antenna, but multiple receive antennas, and is told with the sounding command IE to sound all antennas (multi-antenna flag set to 1). In this case, the single Tx antenna transmits the sounding waveform appropriate for the single Tx antenna on the sounding symbol and transmits the encoded waveform from Equation (72) in the next symbol interval.

$$Z_u(k) = \beta_u \cdot \sum_{l=1}^{M_b} \sum_{m=1}^{M_{m,u}} \hat{H}_{u,m,l}(k) \cdot s_{p(u)}(k) \cdot \exp\{-j2\pi k((m-1+(l-1)\cdot M_{m,u})/\alpha_u)\} \tag{72}$$

where

$\tilde{H}_{u,m,l}(k)$ is the estimated DL channel coefficient between the l-th BS Tx antenna and the m-th receive antenna of the u-th MS for subcarrier k

β_u is a scaling to make the average Tx power of the feedback waveform (averaged across all frequency) of $Z_u(k)$ be one

$s_{p(u)}(k)$ is the sounding sequence of 8.4.6.2.7.1

$M_{m,u}$ is the number of receive antennas on the u-th MS

α_u is $M_{m,u}M_b$

M_b is the number of BS Tx antennas

$p(u)$ in $s_{p(u)}(k)$ is equal to $u-j$ where u is formed from the UL_Permbase and frame number as described in 8.4.6.2.7.1 and j is the CID loop index

The second case for a separability type of 0 is for when the MS has a number of Tx antennas equal to the number of receive antennas. In this case, if the multi-antenna flag is false, then the first antenna of the MS shall transmit the waveform of the preceding equation. If the multi-antenna flag is true, then the encoded waveform to be transmitted by the MS antenna assigned to cyclic shift index of u in the UL Sounding Command is as shown in Equation (73).

$$Z_u(k) = \beta_u \cdot \sum_{l=1}^{M_b} \hat{H}_{u,l}(k) \cdot s_{p(u)}(k) \cdot \exp\{-j2\pi k(l-1)/\alpha_u\} \tag{73}$$

where

$\hat{H}_{u,l}(k)$ is the estimated DL channel coefficient between the l-th BS Tx antenna and the MS antenna assigned to the cyclic shift index of u in the UL Sounding Command for subcarrier k

β_u is a scaling to make the average Tx power of the feedback waveform (averaged across all frequency) of $Z_u(k)$ be one

$s_{p(u)}(k)$ is the sounding sequence of 8.4.6.2.7.1

α_u is M_b

M_b is the number of BS Tx antennas

p(u) in $s_{p(u)}(k)$ is equal to *u-j*, where u is formed from the UL_Permbase and frame number as described in 8.4.6.2.7.1 and j is the CID loop index

When separability type is 1 in the UL Sounding Command (decimation separability in the sounding waveform), then the Use Same Symbol For Additional Feedback bit specifies whether the additional feedback is sent in the symbol(s) following the allocated sounding symbol, or in the same symbol as the allocated sounding symbol. These two cases are described as follows. If separability type is 1 and the Use Same Symbol For Additional Feedback bit is true, then a number of additional sequential decimation offset indices equal to the number of MS receive antennas is used for the encoded feedback waveform (e.g., if a decimation offset of 1 is used for the UL sounding, then decimation offsets 2 and 3 are the additional decimation offsets used for the additional feedback for a two receive antenna MS). On the *i*-th additional decimation offset, the first MS Tx antenna transmits the waveform shown in Equation (74).

$$Z_l(k) = \beta_u \cdot \sum_{l=1}^{M_b} \hat{H}_{i,l}(k) \cdot s_{p(u)}(k) \cdot \exp\{-j2\pi k(l-1)/\alpha_u\} \tag{74}$$

where

$\hat{H}_{i,l}(k)$ is the estimated DL channel coefficient between the *l*-th BS Tx antenna and the *i*-th receive MS antenna

β_u is a scaling to make the average Tx power of the feedback waveform (averaged across all frequency) of $Z_u(k)$ be one

$s_{p(u)}(k)$ is the sounding sequence of 8.4.6.2.7.1

α_u is M_b

M_b is the number of BS Tx antennas

p(u) in $s_{p(u)}(k)$ is equal to *u-j* where *u* is formed from the UL_Permbase and frame number as described in 8.4.6.2.7.1 and *j* is the CID loop index

For this type of feedback, the multi-antenna flag in the sounding command should be set to zero so that only the first antenna of the MS transmits the required sounding waveform and only the first antenna of the MS transmits the feedback waveform.

If separability type is 1 and the Use Same Symbol For Additional Feedback bit is false, then every allocated sounding symbol is followed by a number of additional symbols equal to the number of BS antennas. When an MS has a number of receive antennas equal to its number of Tx antennas, then an MS antenna that transmits on subcarrier *k* of the sounding symbol shall transmit the DL channel coefficient for the *i*-th base antenna to the corresponding MS receive antenna for the *k*-th subcarrier on subcarrier *k* of the *i*-th additional symbol following the allocated sounding symbol. In equation form, the MS that transmits a sounding signal on subcarrier *k* of the sounding symbol shall transmit $\hat{H}_l(k)$ on the *l*-th symbol following the sounding symbol, where $\hat{H}_l(k)$ is the DL channel coefficient from the *l*-th BS antenna to the corresponding MS receive antenna. When the MS has a single Tx antenna and multiple receive antennas, then the first MS Tx antenna transmits any sounding and feedback requested in the sounding command.

8.4.6.2.7.4 Feedback of received pilot coefficients

If the Include Additional Feedback field is set to 0b10, the UL Sounding Command IE() enables the MS to transmit additional feedback based on the DL received pilot signal values in the frequency domain. In this case, a single additional symbol is used to transmit a subset of the received pilot values back to the BS. For the case of a MIMO midamble being used as the source of the received pilots, the midamble received by each SS antenna is decimated in a blockwise fashion, block interlaced to reconstruct the feedback symbol, and sent back on the additional symbol interval. (Blockwise decimation by *p* with a block size of *q* means to retain one block of *q* consecutive samples out of every *pq* consecutive samples, and a block decimation offset of *r* means that the *r*-th block of length *q* is the first one to be retained.) For the received MIMO midamble, the blockwise decimation factor *p* shall be set equal to the number of SS receive antennas, the

block size q shall be set equal to the number of BS antennas, and the blockwise decimation offset value depends on the receive antenna number of the SS. The blockwise decimation offset for SS receive antenna m (m = 1, 2, …) is m–1. Before being transmitted, the power of this additional symbol shall be normalized to the same level as the sounding symbol that precedes it.

8.4.6.3 Optional adjacent subcarrier permutations for AMC

A BS may change from the distributed subcarrier permutation, described in 8.4.6.1 and 8.4.6.2, to the adjacent subcarrier permutation when changing from non-AAS to AAS-enabled traffic to support AAS adjacent subcarrier user traffic in the cell. Alternatively, the adjacent subcarrier permutation can be used to take advantage of the structure of the adjacent subcarrier permutation in parts of the DL subframe that are indicated accordingly by the DL-MAP and UL subframe that are indicated accordingly by the UL-MAP. After this change, the BS shall only transmit/receive traffic using the adjacent subcarrier permutation during the allocated period. The BS shall always return to the distributed subcarrier permutation at the beginning of a new DL subframe. Note that an AAS-enabled SS, which does not provision the same permutation (PUSC/FUSC or adjacent) for AAS traffic selected by the BS for this purpose, is not capable of using its AAS capabilities with this BS.

With the adjacent subcarrier permutation, symbol data within a subchannel is assigned to adjacent subcarriers and the pilot and data subcarriers are assigned fixed positions in the frequency domain within an OFDMA symbol. This permutation is the same for both UL and DL. Within each frame, the BS shall indicate the switch to the optional permutation using one of the zone switch IEs specified in 8.4.5.3.3, 8.4.5.3.4, 8.4.5.4.6, and 8.4.5.4.7. To define adjacent subcarrier permutation, a bin, which is a set of nine contiguous subcarriers within an OFDMA symbol, is a basic allocation unit both in DL and UL. A bin structure is shown in Figure 251.

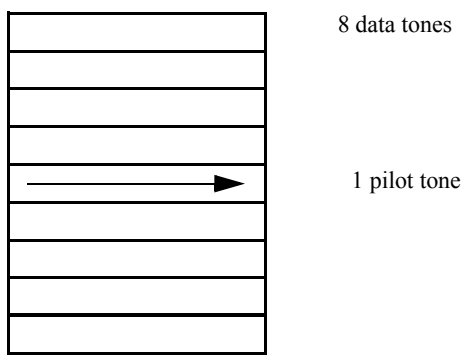

Figure 251—Bin structure

AMC allocations can be made by two mechanisms—by subchannel index reference in UL-MAP and DL-MAP or by subchannel allocation in a band using HARQ map (defined in 6.3.2.3.38). Each UL or DL zone may include allocations from HARQ and normal map. For regular AMC allocations made by the DL-MAP or UL-MAP, an AMC subchannel of type $N \times M$ (where $N \times M = 6$) is defined as six contiguous bins (a slot consists of N bins by M symbols). The subchannels are numbered from the lowest (0) to the highest frequency so that subchannel k ($k = 0 - 192/N$) consists of bins $N \times k$ to $N \times k + N - 1$.

A group of four rows of bins is called a physical band. For band AMC allocations made by HARQ map message, an AMC slot consists of six contiguous bins in a same logical band defined in a Format Configuration IE (6.3.2.3.38.2). There are four types of AMC subchannels, which are different in the collection of six bins in a band. In the first type (default type), the available bins in a band are enumerated by

starting from the lowest bin in the first symbol to the last bin in the symbol, then going to the lowest bin in the next symbol, and so on. In the first type of AMC subchannel, a slot consists of six consecutive bins in this enumeration. In the second type of AMC subchannel, a slot is defined as two bins by three symbols. In the third type, a slot is defined as three bins by two symbols; and in the fourth type, a slot is defined as one bin by six symbols. In the last three types of AMC subchannel, enumeration of bins in a slot is the same as in the first type. Table 467 summarizes the parameters of the AAS subcarrier.

Table 467—OFDMA AMC subcarrier allocations

Parameter	Value
Number of DC Subcarriers	1 (Index 1024, counting from 0)
Number of Guard Subcarriers, left	160
Number of Guard Subcarriers, right	159
N_{used}, Number of Used Subcarriers (which includes the DC subcarrier)	1729
Total Number of Subcarriers	2048
Number of Pilots	192
Number of Data Subcarriers	1536
Number of Physical Bands	48
Number of Bins per Physical Band	4
Number of Data Subcarriers per Slot	48

Let the index of the traffic subcarriers be numbered from 0 to 47 within an AMC slot. The index of the first traffic subcarrier in the first bin is 0, the next one is 1, and so on. The index of the subcarriers increases along the subcarriers first and then the bin. The j-th symbol of the 48 symbols where a band AMC slot is allocated is mapped onto the $(S_{per}^{off}(j) - 1)$ -th subcarrier of a slot. j is [0, 47]. See Equation (75).

$$S_{per}^{off}(j) = \begin{cases} P_{per}(j) + off & P_{per}(j) + off \neq 0 \\ off & P_{per}(j) + off = 0 \end{cases} \tag{75}$$

where

$P_{per}(j)$ is the j-th element of the left cyclic shifted version of basic sequence P_0 by per

P_0 Basic sequence defined in GF(7^2): {01, 22, 46, 52, 42, 41, 26, 50, 05, 33, 62, 43, 63, 65, 32, 40, 04, 11, 23, 61, 21, 24, 13, 60, 06, 55, 31, 25, 35, 36, 51, 20, 02, 44, 15, 34, 14, 12, 45, 30, 03, 66, 54, 16, 56, 53, 64, 10} in hepta-notation

per is PermBase mod 48

off is $(\lfloor \text{PermBase}/48 \rfloor) \bmod 49$. This field is an element of GF(7^2).

The addition between two element in GF(7^2) is component-wise addition modulo 7 of two representation. For example, (56) + (34) in GF(7^2) = (13).

In the DL, PermBase shall be set to DL_PermBase specified in preceding STC DL Zone IE; and in the UL, it shall be set to UL_PermBase specified in preceding UL Zone IE.

8.4.6.3.1 AMC optional permutation

See Table 468, Table 469, and Table 470 for the AMC subcarrier allocations for 1024-FFT, 512-FFT, and 128-FFT, respectively.

Table 468—1024-FFT OFDMA AMC subcarrier allocations

Parameter	Value	Notes
Number of DC Subcarriers	1	—
Number of Guard Subcarriers, Left	80	—
Number of Guard Subcarriers, Right	79	—
Number of Used Subcarriers (N_{used}) (including all possible allocated pilots and the DC subcarrier)	865	—
Number of Pilot Subcarriers	96	—
Pilot Subcarrier Index	$9k+3m+1$, for $k = 0,1\ldots95$, and m = [symbol index] mod 3	Symbol of index 0 in pilot subcarrier index should be the first symbol of the current zone. m is incremented only for data symbols, excluding preambles, Safety zones, Sounding symbols, midambles, etc. DC subcarrier is excluded when the pilot subcarrier index is calculated by the equation.
Number of Data Subcarriers	768	—
Number of physical bands	24	—
Number of Bins per physical band	4	—
Number of Data Subcarriers per slot	48	—

Table 469—512-FFT OFDMA AMC subcarrier allocations

Parameter	Value	Notes
Number of DC Subcarriers	1	—
Number of Guard Subcarriers, Left	40	—
Number of Guard Subcarriers, Right	39	—
Number of Used Subcarriers (N_{used}) (including all possible allocated pilots and the DC subcarrier)	433	—
Number of Pilot Subcarriers	48	—

Table 469—512-FFT OFDMA AMC subcarrier allocations

Parameter	Value	Notes
Pilot Subcarrier Index	$9k+3m+1$, for $k = 0,1\ldots47$, and m = [symbol index] mod 3	Symbol of index 0 in pilot subcarrier index should be the first symbol of the current zone. m is incremented only for data symbols, excluding preambles, Safety zones, Sounding symbols, midambles, etc. DC subcarrier is excluded when the pilot subcarrier index is calculated by the equation.
Number of Data Subcarriers	384	—
Number of physical bands	12	—
Number of Bins per physical band	4	—
Number of Data Subcarriers per slot	48	—

Table 470—128-FFT OFDMA AMC subcarrier allocations

Parameter	Value	Notes
Number of DC Subcarriers	1	—
Number of Guard Subcarriers, Left	10	—
Number of Guard Subcarriers, Right	9	—
Number of Used Subcarriers (N_{used}) (including all possible allocated pilots and the DC subcarrier)	109	—
Number of Pilot Subcarriers	12	—
Pilot Subcarrier Index	$9k+3m+1$, for $k = 0,1\ldots11$ and m = [symbol index] mod 3	Symbol of index 0 in pilot subcarrier index should be the first symbol of the current zone. m is incremented only for data symbols, excluding preambles, Safety zones, Sounding symbols, midambles, etc.
Number of Data Subcarriers	96	—
Number of physical bands	3	—
Number of Bins per physical band	4	—
Number of Data Subcarriers per slot	48	—

NOTE—A data symbol is a symbol that overlaps with at least one data slot (regardless of whether data are allocated on that slot).

In the region mapped according to HARQ MAP in 6.3.2.3.38, there are four types of AMC subchannels which are different in the collection of six bins in a band. In the first type (default type), the available bins in a band are enumerated by starting from the lowest bin in the first symbol to the last bin in the symbol, then going to the lowest bin in the next symbol, and so on. A subchannel consists of six consecutive bins in this enumeration. The second type is two bins by three symbols, the third type is three bins by two symbols, and

the last type is one bin by six symbols. In the last three types, enumeration of bins in a subchannel is the same as in the first type.

In the region mapped according to normal DL/UL-MAP in 8.4.5.3 and 8.4.5.4, there is only one type of AMC subchannel, which consists of two bins by three symbols.

In all the types, data mapping follows 8.4.3.4 except for region mapped according to 6.3.2.3.38. Slots for DL AMC zone in a region mapped according to 6.3.2.3.38 are allocated along the subchannel index first within a band. The direction of data mapping for DL AMC slots shall be frequency first (across bands when multiple bands are allocated).

Slots for UL AMC zone in a region mapped according to 6.3.2.3.38 are allocated along the symbol index first within a band. The direction of data mapping for UL AMC slots shall be frequency first (across bands when multiple bands are allocated).

8.4.6.3.2 Band-AMC operation in normal DL/UL-MAP

This subclause describes the band-AMC operation, which is designed for band-AMC enabled SS using normal DL/UL-MAP. The SS sends the REP-RSP message in an unsolicited fashion to BS to trigger band AMC operation. The triggering conditions are given by TLV encodings in UCD messages. The REP-RSP (see 11.12 for the TLV encodings) includes the CINR measurements of five best bands.

For FFT sizes of 2048 and 1024, the number of Max Logical Bands is defined as 12. For FFT sizes of 512 and 128, the number of Max Logical Bands is the same as the number of physical AMC bands defined in 8.4.6.3. A logical band is a grouping of the physical AMC bands. For example, 12 logical bands for 1024-FFT imply that logical band 0 is composed of AMC bands (0,1), logical band 1 is composed of AMC bands (2,3), and logical band 2 is composed of AMC bands (4,5). In general, if K = Max Logical Bands, then logical band $J = [0\ldots(K-1)]$ contains physical bands $M/K \times J$, $M/K \times J + 1, \ldots M/K \times (J + 1) - 1$, where M is the number of physical AMC bands.

The BS acknowledges the trigger by allocating band AMC subchannels. From the next frame when the SS/MS sends the REP-RSP, the SS starts reporting the differential of CINR for four selected bands, and the MS starts reporting the differential of CINR for four or five selected bands (increment: 1 and decrement: 0 with a step of 1 dB) on its allocated fast-feedback channel (CQICH). The band indexes are mapped from LSB to MSB of the CQICH codeword in increasing order. If the BS does not allocate the band AMC subchannels within the specified delay (CQICH band AMC transition delay) in the UCD message, the SS reports the updated average CINR for the allocation of subchannel with distributed subcarrier permutation.

When the BS wants to trigger the transition to band AMC mode and update the CINR reports, it sends the REP-REQ message (see 11.11 for the TLV encodings) or feedback polling IE for type 1101. When the SS receives the message, it replies with REP-RSP message or feedback header type 0110. When the BS receives the REP-RSP or feedback header type 0110, it should synchronize the selection of bands reported and their CINRs. Unless the BS allocates subchannels with distributed subcarrier permutation, the SS reports the differential increment/decrement compared to the most up-to-date report in the next CQI reporting frame.

8.4.6.3.3 AMC support for SDMA

The pilots in an AMC AAS zone are regarded as part of the allocation, and as such shall be beamformed in a way that is consistent with the transmission of the allocation's data subcarriers. In an SDMA region, the pilots of each allocation may correspond to a different pilot pattern. A pilot pattern consists of location and polarity. The pilot patterns are depicted in Figure 252. Data subcarriers shall be punctured to obtain patterns #2 and #3. Subcarriers shall only be punctured if there is an allocation associated with the corresponding pattern, as described in the AAS_SDMA_DL_IE(), AAS_SDMA_UL_IE(), PHYMOD_DL_IE(), PHYMOD_UL_IE(), Reduced_AAS_Private_DL-MAP(), or Reduced_AAS_Private_

UL-MAP(). Only MSs that support all four pilot patterns, as indicated by their capability in 11.8.3.5.14, shall be assigned allocations in an SDMA region where pilot patterns #2 and #3 are used. Data subcarriers shall be punctured after constellation mapping in the case of CC encoding, and prior to constellation mapping in the case of CTC encoding. In the latter case, the FEC block shall be truncated to accommodate the punctured subchannel structure, and the data subcarrier enumeration of Equation (75) shall not be applied. Instead, data subcarriers within a slot shall be enumerated starting from the first OFDMA symbol at the data subcarrier that is lowest in frequency, continuing in ascending frequency order throughout the slot's subcarriers in the same symbol, then going to the next symbol at the subcarrier lowest in frequency, and so on.

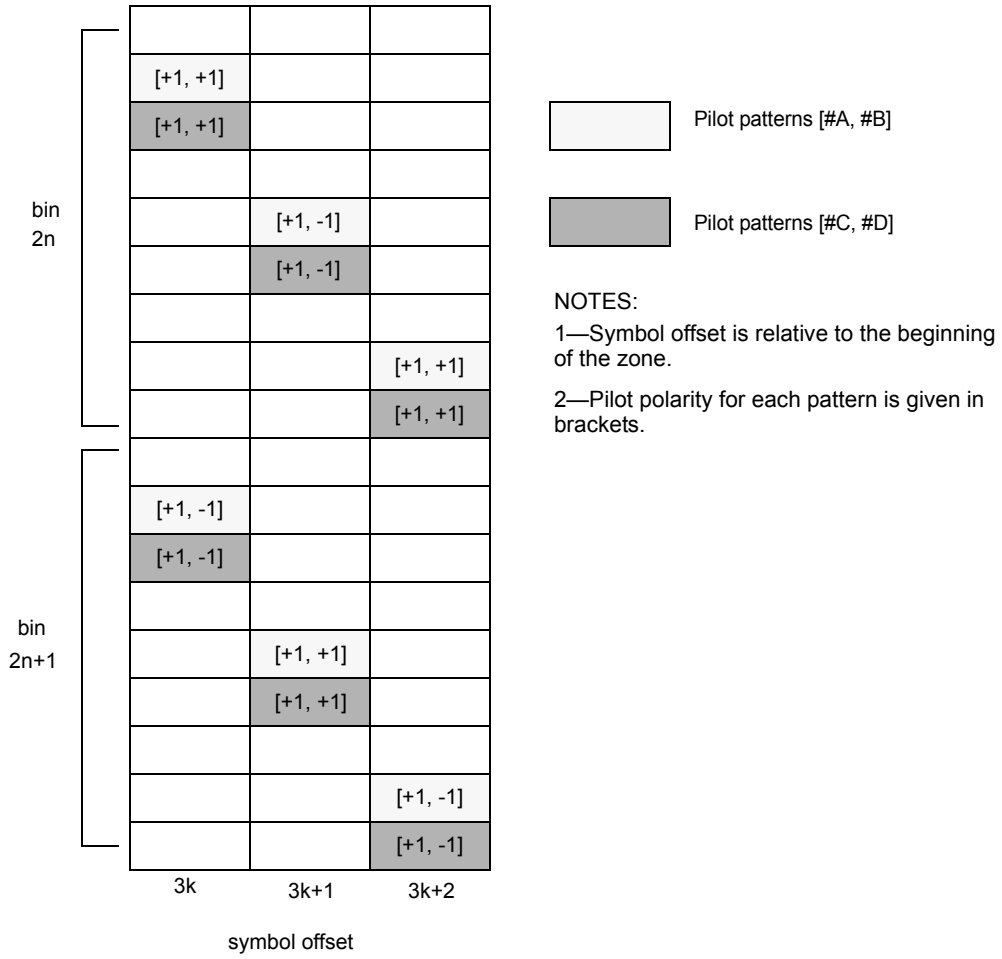

Figure 252—Pilot patterns for AAS mode in AMC zone

8.4.6.4 Optional permutations for PUSC

8.4.6.4.1 Optional permutation for PUSC adjacent subcarrier allocation (PUSC-ASCA)

Two ways to use an adjacent subcarrier allocation for the PUSC mode are given in 8.4.6.4.1.1 and 8.4.6.4.1.2.

8.4.6.4.1.1 Allocation using adjacent clusters

This subclause defines an adjacent subcarrier allocation using adjacent clusters for the PUSC mode.

Symbol structure shall use the parameters from Table 442, Table 443, Table 444, and Table 445 (as the regular PUSC); the same cluster structure shall be maintained.

8.4.6.4.1.1.1 Allocation of subcarriers to subchannels

Allocation of subcarriers to subchannels shall be performed in the following manner:

a) Dividing the subcarriers into physical clusters each containing 14 adjacent subcarriers (starting from data subcarrier 0), number of clusters are defined in Table 442, Table 443, Table 444, and Table 445.

b) Clusters to be used for a specific DL allocation shall be the first 2×(Allocated Subchannels) after the first 2×(SubchannelOffset).

c) Concatenate the clusters into blocks using the rules from Table 471.
   1) n: number of allocated subchannels
   2) k: floor (n / 12)
   3) m: n modulo 12

Table 471—Allocation of subcarriers to subchannels

Number of subchannels	Clusters concatenated
$n \leq 12$	1 block of $2 \times n$ clusters
$n = 12 \times k$	k blocks of 24 clusters
$n > 12$, n != $12 \times k$	(k – 1) blocks of 24 clusters 1 block of $2 \times$ ceil((m + 12)/2) clusters 1 block of $2 \times$ floor((m + 12)/2) clusters

d) Per block, remove from the clusters associated with the section the pilot carriers, take the remaining data subcarriers and using the same procedure described in 8.4.6.1.2.2.2 (with the parameter $N_{subcarriers} = 24$, PermutationBase taken from Table 472 and Cell_Id as defined in message PUSC_Directed_MIMO_Alloc_IE) partition the subcarriers into subchannels containing 24 data subcarriers in each OFDMA symbol.

Table 472—Cluster permutation base

Permutation ID	Number of clusters in the section	Permutation Base
12	24	[6,9,4,8,10,11,5,2,7,3,1,0]
11	22	[6,9,2,8,10,5,0,4,3,1,7]
10	20	[6,4,1,2,9,3,5,8,7,0]
9	18	[7,4,0,2,1,5,3,8,6]
8	16	[7,4,0,2,1,5,3,6]
7	14	[2,1,5,3,4,6,0]
6	12	[2,1,5,3,4,0]
5	10	[4,2,3,1,0]
4	8	[2,3,1,0]

Table 472—Cluster permutation base *(continued)*

Permutation ID	Number of clusters in the section	Permutation Base
3	6	[2,0,1]
2	4	[0,1]
1	2	[0]

8.4.6.4.1.2 Allocation using distributed clusters

This subclause defines an adjacent subcarrier allocation using distributed clusters for the PUSC mode.

Symbol structure shall use the parameters from Table 434 (as the regular PUSC); the same cluster structure shall be maintained.

8.4.6.4.1.2.1 Allocation of subcarriers to subchannels

Allocation of subcarriers to subchannels shall be performed in the following manner:

a) Dividing the subcarriers into 120 physical clusters containing 14 adjunct subcarriers each (starting from carrier 0).
b) Renumbering the physical clusters into logical clusters using the following formula:
LogicalCluster = RenumberingSequence((PhysicalCluster + 13 × IDcell) mod 120).
c) Dividing the clusters into six major groups (number of clusters per Major group is set using parameters from Table 434).
d) Allocating carriers to subchannel in each major group depends on the specific allocation performed. per major group determine the number of clusters which are to be used in the specific allocation (clusters to be used for a specific DL allocation shall be the first 2 × (Allocated Subchannels) after the first 2 × (SubchannelOffset)), determine the number of clusters to be used in every major group. Per major group (which includes allocated clusters) remove from the associated clusters the pilot carriers, take the remaining data subcarriers and using the same procedure described in 8.4.6.1.2.2.2 (with the parameter Nsubcarriers = 24, PermutationBase taken from Table 472 and Cell_Id as defined in message PUSC Directed MIMO Allocation IE) partition the subcarriers into subchannels containing 24 data subcarriers in each OFDMA symbol.

8.4.7 OFDMA ranging

A ranging channel is composed of one or more groups of six adjacent subchannels, using the symbol structure defined in 8.4.6.2.1, where the groups are defined starting from the first subchannel. Optionally, ranging channel can be composed of one of more groups of eight adjacent subchannels using the symbol structure defined in 8.4.6.2.5 or 8.4.6.3. Subchannels are considered adjacent if they have successive logical subchannel numbers. The indices of the subchannels that compose the ranging channel are specified in the UL-MAP message. Users are allowed to collide on this ranging channel. To effect a ranging transmission, each user randomly chooses one ranging code from a bank of specified binary codes. These codes are then BPSK modulated onto the subcarriers in the ranging channel, 1 bit per subcarrier (subcarriers used for ranging shall be modulated with the waveform specified in 8.4.7.1 or 8.4.7.2 and are not restricted to any time grid specified for the data subchannels).

For some circumstances, such as trying network reentry to another new BS in the drop situation, location update in idle mode, or fast call recovery, the MS may need additional UL resources for RNG-REQ because

of the HMAC/CMAC tuple. The MS shall use the HO ranging code if the RNG-REQ requires an HMAC/CMAC tuple. The BS receiving an HO ranging code shall allocate more bandwidth to the MS, i.e., enough to send RNG-REQ with HMAC tuple.

For the 128-FFT and 512-FFT, the BS may allocate less than 6 (or 8 in case of optional PUSC or AMC) subchannels for a ranging or BR allocation. In this case, the MS shall produce the ranging code as defined below (as if 6/8 subchannels were allocated), but modulate only the tones in the subchannels allocated (so that the last bits of the ranging code are not transmitted). For the 512-FFT, the minimum allocation shall be 5 subchannels for PUSC (or 8 for the optional PUSC or AMC). In case of 512-FFT, the minimum allocation of 5 subchannels in UL PUSC zone shall be restricted to the case of segmented PUSC using UL allocated subchannels bitmap, where the BS shall allocate ranging or BR allocation of minimum 5 subchannels for the segment that has only 5 subchannels. For other cases, BS shall allocate ranging or BR allocation only as a multiple of 6 subchannels (8 subchannels in case of optional PUSC or AMC). That is, BS shall only allocate ranging size of 6 or 12 subchannels (8 or 16 or 24 in case of optional PUSC or AMC).

8.4.7.1 Initial ranging and HO ranging transmissions

The initial ranging codes shall be used for initial network entry and association. HO ranging codes shall be used for ranging against a Target BS during HO. An initial ranging transmission shall be performed during two or four consecutive symbols. The same ranging code is transmitted on the ranging channel during each symbol, with no phase discontinuity between the two symbols. A time-domain illustration of the initial ranging or HO ranging transmission is shown in Figure 253.

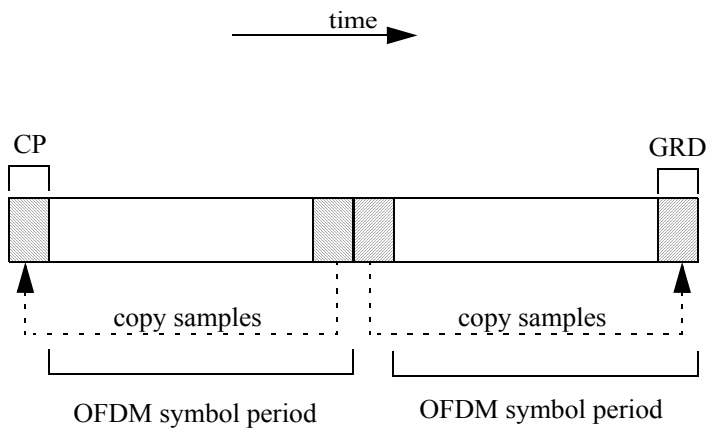

Figure 253—Initial ranging or HO ranging transmission for OFDMA

The transmitted signal is according to 8.4.2.5, Equation (56), except that $0 \le t \le 2T_s$.

The BS can allocate two consecutive initial ranging or HO ranging slots; onto those slots, the MS shall transmit the two consecutive initial ranging or HO ranging codes (starting code shall always be a multiple of 2), as illustrated in Figure 254.

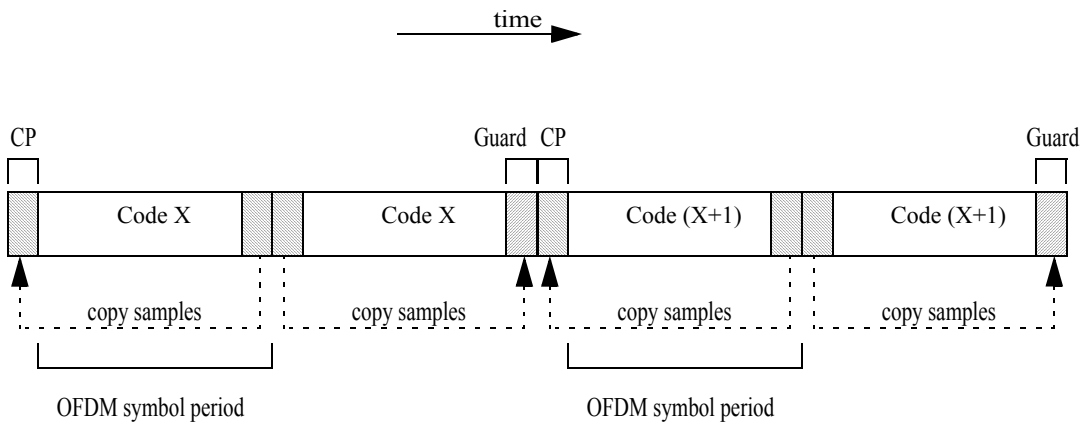

Figure 254—Initial ranging or HO ranging transmission for OFDMA, using two consecutive initial ranging or HO ranging codes

8.4.7.2 Periodic ranging and BR transmissions

Periodic ranging transmissions are sent periodically for system periodic ranging. BR transmissions are for requesting UL allocations from the BS.

These transmissions shall be sent only by SS that have already synchronized to the system.

To perform either a periodic ranging or BR transmission, the SS can send a transmission in one of the following ways:

a) Modulate one ranging code on the ranging subchannel for a period of one OFDMA symbol. Ranging subchannels are dynamically allocated by the MAC and indicated in the UL-MAP. A time-domain illustration of the periodic ranging or BR transmission is shown in Figure 255.

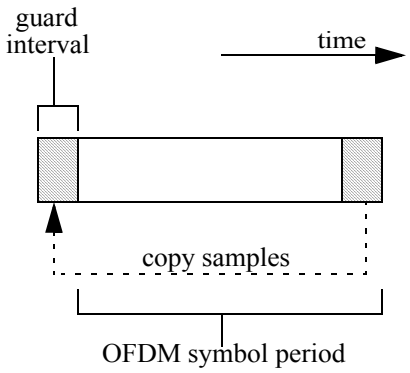

Figure 255—Periodic ranging or BR transmission for OFDMA using one code

b) Modulating three consecutive ranging codes (starting code shall always be a multiple of three) on the ranging subchannel for a period of three OFDMA symbols (one code per symbol). Ranging subchannels are dynamically allocated by the MAC and indicated in the UL-MAP. A time-domain illustration of the periodic ranging or BR transmission is shown in Figure 256.

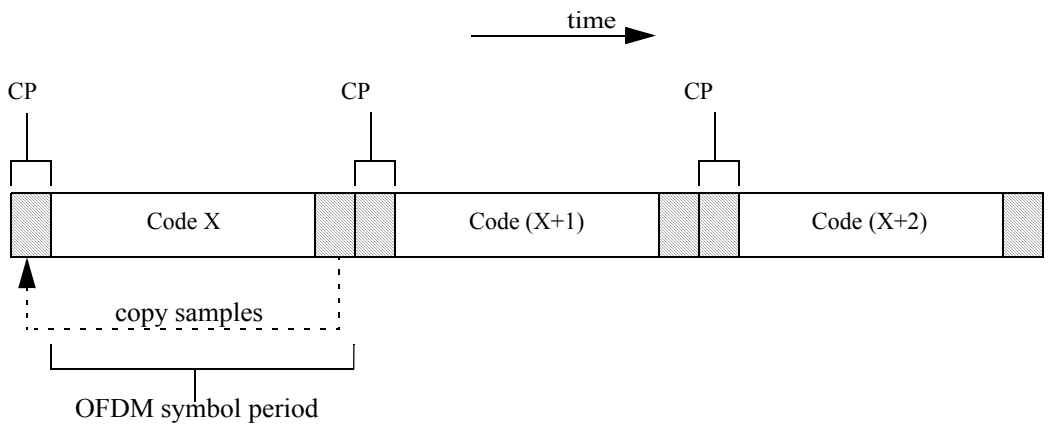

Figure 256—Periodic ranging or BR transmission for OFDMA using three consecutive codes

8.4.7.3 Ranging codes

The binary codes are the pseudonoise codes produced by the PRBS described in Figure 257, which implements the polynomial generator $1 + X^1 + X^4 + X^7 + X^{15}$. The PRBS generator shall be initialized by the seed b14...b0 = 0,0,1,0,1,0,1,1,s0,s1,s2,s3,s4,s5,s6, where s6 is the LSB of the PRBS seed, and s6:s0 = UL_PermBase, where s6 is the MSB of the UL_PermBase.

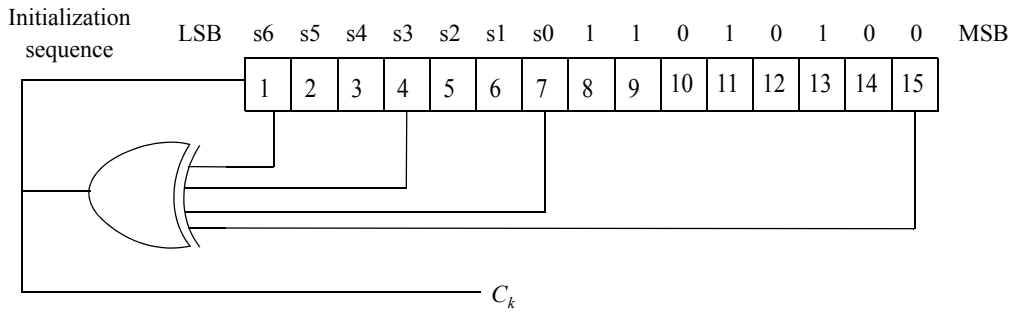

Figure 257—PRBS generator for ranging code generation

The binary ranging codes are subsequences of the pseudonoise sequence appearing at its output C_k. The length of each ranging code is 144 bits. These bits are used to modulate the subcarriers in a group of six (eight for the permutation defined in 8.4.6.2.5 or 8.4.6.3) adjacent subchannels, where subchannels are considered adjacent if they have successive logical subchannel numbers. The bits are mapped to the subcarriers in increasing frequency order of the subcarriers so that the lowest indexed bit modulates the subcarrier with the lowest frequency index and the highest indexed bit modulates the subcarrier with the highest frequency index. The index of the lowest numbered subchannel in the six (eight for the permutation defined in 8.4.6.2.5 or 8.4.6.3) shall be an integer multiple of six (eight for the permutation defined in 8.4.6.2.5 or 8.4.6.3). The six (eight for the permutation defined in 8.4.6.2.5 or 8.4.6.3) subchannels are

called a ranging subchannel. The ranging subchannel is referenced in the ranging and BR messages by the index of lowest numbered subchannel.

For example, the first 144-bit code, obtained by clocking the PN generator as specified and by setting UL_PermBase = 0, shall be 00110000010001... The next ranging code is produced by taking the output of the 145th to 288th clock of the PRBS generator, etc.

The number of available codes is 256, numbered 0..255. Each BS uses a subgroup of these codes, where the subgroup is defined by a number S, $0 \leq S \leq 255$. The group of codes shall be between S and $((S + O + N + M + L) \bmod 256)$.

— The first N codes produced are for initial ranging. Clock the PRBS generator $144 \times (S \bmod 256)$ times to $144 \times ((S + N) \bmod 256) - 1$ times.
— The next M codes produced are for periodic ranging. Clock the PRBS generator $144 \times ((N + S) \bmod 256)$ times to $144 \times ((N + M + S) \bmod 256) - 1$ times.
— The next L codes produced are for BRs. Clock the PRBS generator $144 \times ((N + M + S) \bmod 256)$ times to $144 \times ((N + M + L + S) \bmod 256) - 1$ times.
— The next O codes produced are for HO ranging. Clock the PRBS generator $144 \times ((N + M + L + S) \bmod 256)$ times to $144 \times ((N + M + L + O + S) \bmod 256) - 1$ times.

The BS can separate colliding codes and extract timing (ranging) information and power. In the process of user code detection, the BS gets the Channel Impulse Response (CIR) of the code, thus acquiring for the BS vast information about the user channel and condition. The time (ranging) and power measurements allow the system to compensate for the near/far user problems and the propagation delay caused by large cells.

8.4.7.4 Ranging and BR opportunity size

For CDMA ranging and BR, the ranging opportunity size is the number of symbols required to transmit the appropriate ranging/BR code (1, 2, 3, or 4 symbols), and is denoted N_1. N_2 denotes the number of subchannels required to transmit a ranging code (6 or 8; see 8.4.7.3). In each ranging/BR allocation, the opportunity size (N_1) is fixed and conveyed by the corresponding UL-MAP IE that defines the allocation.

The ranging allocation is subdivided into slots of N_1 OFDMA symbols by N_2 subchannels, in a time first order, i.e., the first opportunity begins on the first symbol of the first subchannel of the ranging allocation, the next opportunities appear in ascending order in the same subchannel, until the end of the ranging/BR allocation (or until there are less than N_1 symbols in the current subchannel), and then the number of subchannel is incremented by N_2. The ranging allocation is not required to be a whole multiple of N_1 symbols, so a gap may be formed (that can be used to mitigate interference between ranging and data transmissions). Each CDMA code shall be transmitted at the beginning of the corresponding slot. See Figure 258.

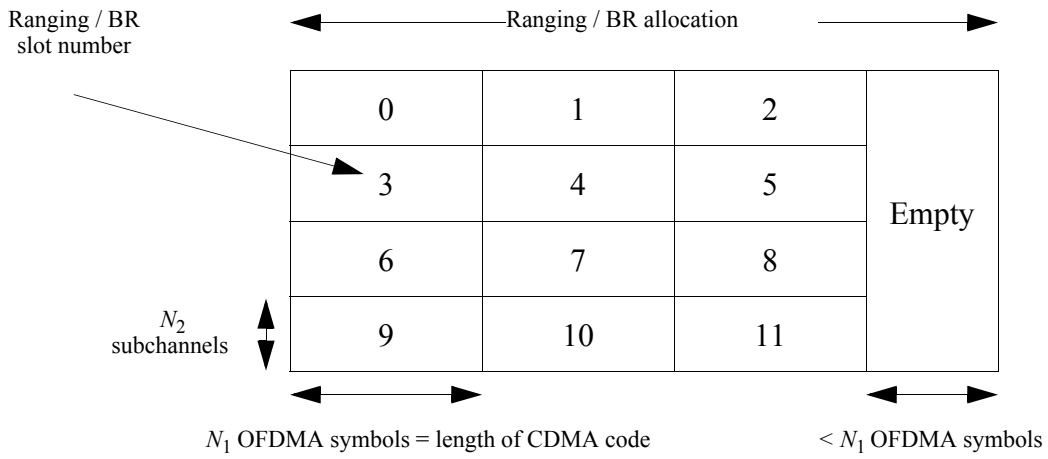

Figure 258—Ranging/BR opportunities

8.4.8 Space-time coding (STC) (optional)

8.4.8.1 STC using two antennas

STC (in some cases also termed STTD) or FHDC may be used on the DL to provide higher order (space) Tx diversity (see Alamouti [B1]).

There are two Tx antennas on the BS side and one reception antenna on the SS side. This scheme requires multiple input single output channel estimation. Decoding is very similar to maximum ratio combining.

Figure 259 shows Tx diversity insertion into the OFDMA chain. Each Tx antenna has its own OFDMA chain, but they have the same Local Oscillator for synchronization purposes.

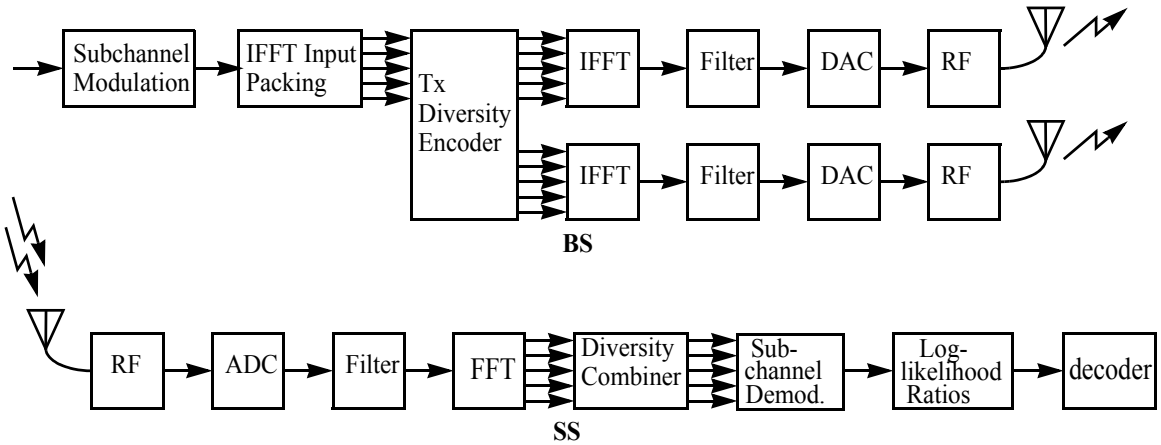

Figure 259—Illustration of STC

Both antennas transmit two different OFDMA data symbols in the same time. Time domain (Space-Time) or Frequency domain (Space-Frequency) repetition is used.

This mode of operation allows better performance with higher complexity in the receiver. The mode of operation introduced in the sequel defines a combined operation of the Tx diversity using PUSC or FUSC in the DL only. The current PUSC mandatory mode of operation allows the splitting of the available Subchannels into three segments, each transmitting some (or all) of the subchannels as allocated by the FCH. The Tx diversity mode of operation shall be used in a combined way with the mandatory mode of operation; this is performed by allocating subchannels to either of the modes of operation.

The allocation of subchannels to STC operation shall be done by allocating one or more groups of subchannels as defined in 8.4.4.5.

The regular subchannel and preamble transmission in the DL shall be performed from only one antenna (Antenna 0) (unless CDD is employed, see 8.4.8.7) while the Tx diversity subchannels transmission shall be performed from both antennas obeying the formulas in 8.4.8.1.2.1.

8.4.8.1.1 Multiple-input, single-output channel estimation and synchronization

Both antennas transmit in the same time, and they share the same Local Oscillator. Thus, the received signal has exactly the same autocorrelation properties as for a single antenna. Time and frequency coarse and fine estimation can be performed in the same way as for a single antenna. The scheme requires multiple-input, single-output channel estimation, which is allowed by splitting some pilots between the 2 Tx antennas, as described in 8.4.8.1.2.1.

8.4.8.1.2 STC using two antennas

8.4.8.1.2.1 STC encoding

The 2-antenna rate 1 scheme is a basic STC scheme, enabled by Matrix A as defined in 8.4.8.1.4. Other STC schemes are defined in a matrix notation in 8.4.8.1.4. The basic scheme (Alamouti [B1]) transmits two complex symbols s_1 and s_2, using the multiple-input, single-output channel (two Tx, one Rx) with channel vector values h_0 (for antenna 0) and h_1 (for antenna 1).

First channel use: Antenna 0 transmits s_1, antenna1 transmits s_2.

Second channel use: Antenna 0 transmits $-s_2^*$, antenna1 transmits s_1^*.

Receiver gets r_0 (first channel use) and r_1(second channel use) and computes s_1 and s_2 estimates:

$$\hat{s}_1 = h_0^* \times r_0 + h_1 \times r_1^* \tag{76}$$

$$\hat{s}_2 = h_1^* \times r_0 - h_0 \times r_1^* \tag{77}$$

These estimates benefit from second order diversity as in the 1Tx-2Rx Maximum Ratio Combining scheme.

STC rate 1 encoding shall be performed after constellation mapping and before subcarrier randomization defined in 8.4.9.4.1. Symbols s_1 and s_2 represent two subcarriers at the same frequency in two consecutive OFDMA symbols (each OFDMA subcarrier is referred to as a channel use). The STC rate 1 coding is done on all data subcarriers that belong to an STC-coded burst in the two OFDMA symbols. Pilot subcarriers are not encoded and are transmitted from either antenna 0 or antenna 1.

The STC transmission may be used both in a PUSC and FUSC configurations.

8.4.8.1.2.1.1 STC using 2 antennas in PUSC

In PUSC, the data allocation to cluster is changed (Figure 260) to accommodate two antennas transmission with the same estimation capabilities, each cluster shall be transmitted twice from each antenna.

Figure 260 replaces Figure 247 in the definition of PUSC permutation when STC is enabled. The pilot locations change in period of four symbols.

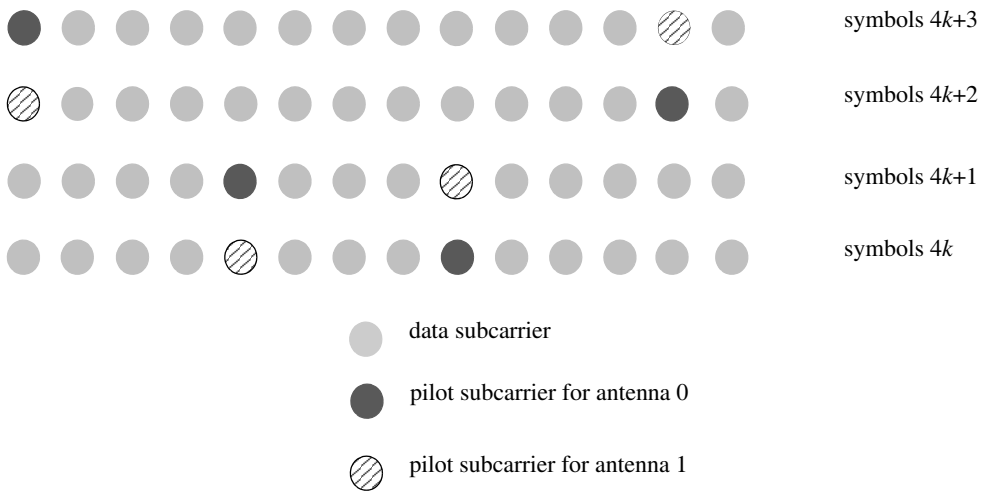

Figure 260—Cluster structure for STC PUSC using two antennas

Symbols are counted from the beginning of the current zone. The first symbol in the zone is even. STC encoding is done on each pair of symbols $2n$, $2n+1$ ($n = 0,1,..$).

Table 473 shows an STC data mapping example for the DL PUSC using vertical encoding as the result of mapping of QAM symbols (see 8.4.3.4) followed by MIMO encoding. Each row is subcarrier-in-subchannel, and each column is a symbol. $s_0..s_{47}$ denote first slot out of the FEC, $s_{48}..s_{95}$ denote second slot. The figure is in logical subcarriers (subcarrier in subchannel) over symbols (before DL PUSC permutation).

Table 473—STC mapping example for DL PUSC

	STDD (Matrix A), 2 antennas				SM (Matrix B), 2 antennas			
	Antenna 0		Antenna 1		Antenna 0		Antenna 1	
	Even Symbol	Odd Symbol	Even Symbol	Odd Symbol	Even Symbol	Odd Symbol	Even Symbol	Odd Symbol
Subcarrier 0	s_0	$-s_{24}^*$	s_{24}	s_0^*	s_0	s_{48}	s_1	s_{49}
Subcarrier 1	s_1	$-s_{25}^*$	s_{25}	s_1^*	s_2	s_{50}	s_3	s_{51}
Subcarrier 2	s_2	$-s_{26}^*$	s_{26}	s_2^*	s_4	s_{52}	s_5	s_{53}
Subcarrier 3	s_3	$-s_{27}^*$	s_{27}	s_3^*	s_6	s_{54}	s_7	s_{55}
Subcarrier 4	s_4	$-s_{28}^*$	s_{28}	s_4^*	s_8	s_{56}	s_9	s_{57}
Subcarrier 5	s_5	$-s_{29}^*$	s_{29}	s_5^*	s_{10}	s_{58}	s_{11}	s_{59}
Subcarrier 6	s_6	$-s_{30}^*$	s_{30}	s_6^*	s_{12}	s_{60}	s_{13}	s_{61}

Table 473—STC mapping example for DL PUSC *(continued)*

Subcarrier 7	s_7	$-s_{31}^*$	s_{31}	s_7^*	s_{14}	s_{62}	s_{15}	s_{63}
Subcarrier 8	s_8	$-s_{32}^*$	s_{32}	s_8^*	s_{16}	s_{64}	s_{17}	s_{65}
Subcarrier 9	s_9	$-s_{33}^*$	s_{33}	s_9^*	s_{18}	s_{66}	s_{19}	s_{67}
Subcarrier 10	s_{10}	$-s_{34}^*$	s_{34}	s_{10}^*	s_{20}	s_{68}	s_{21}	s_{69}
Subcarrier 11	s_{11}	$-s_{35}^*$	s_{35}	s_{11}^*	s_{22}	s_{70}	s_{23}	s_{71}
Subcarrier 12	s_{12}	$-s_{36}^*$	s_{36}	s_{12}^*	s_{24}	s_{72}	s_{25}	s_{73}
Subcarrier 13	s_{13}	$-s_{37}^*$	s_{37}	s_{13}^*	s_{26}	s_{74}	s_{27}	s_{75}
Subcarrier 14	s_{14}	$-s_{38}^*$	s_{38}	s_{14}^*	s_{28}	s_{76}	s_{29}	s_{77}
Subcarrier 15	s_{15}	$-s_{39}^*$	s_{39}	s_{15}^*	s_{30}	s_{78}	s_{31}	s_{79}
Subcarrier 16	s_{16}	$-s_{40}^*$	s_{40}	s_{16}^*	s_{32}	s_{80}	s_{33}	s_{81}
Subcarrier 17	s_{17}	$-s_{41}^*$	s_{41}	s_{17}^*	s_{34}	s_{82}	s_{35}	s_{83}
Subcarrier 18	s_{18}	$-s_{42}^*$	s_{42}	s_{18}^*	s_{36}	s_{84}	s_{37}	s_{85}
Subcarrier 19	s_{19}	$-s_{43}^*$	s_{43}	s_{19}^*	s_{38}	s_{86}	s_{39}	s_{87}
Subcarrier 20	s_{20}	$-s_{44}^*$	s_{44}	s_{20}^*	s_{40}	s_{88}	s_{41}	s_{89}
Subcarrier 21	s_{21}	$-s_{45}^*$	s_{45}	s_{21}^*	s_{42}	s_{90}	s_{43}	s_{91}
Subcarrier 22	s_{22}	$-s_{46}^*$	s_{46}	s_{22}^*	s_{44}	s_{92}	s_{45}	s_{93}
Subcarrier 23	s_{23}	$-s_{47}^*$	s_{47}	s_{23}^*	s_{46}	s_{94}	s_{47}	s_{95}

8.4.8.1.2.1.2 STC using two antennas in FUSC

In FUSC, the pilots within the symbols shall be divided between the antennas. Antenna 0 uses VariableSet#0 and ConstantSet#0 for even symbols while antenna 1 uses VariableSet#1 and ConstantSet#1 for even symbols. Antenna 0 uses VariableSet#1 and ConstantSet#0 for odd symbols while antenna 1 uses VariableSet#0 and ConstantSet#1 for odd symbols (symbol counting starts at the starting point of the relevant STC zone), defined in 8.4.6.1.2.2. In STC transmission, the *FUSC_SymbolNumber* in Equation (62) is replaced with *floor*(*FUSC_SymbolNumber/2*) so that variable pilots shall move every second symbol. The transmission of the data shall be performed in pairs of symbols as illustrated in Figure 261.

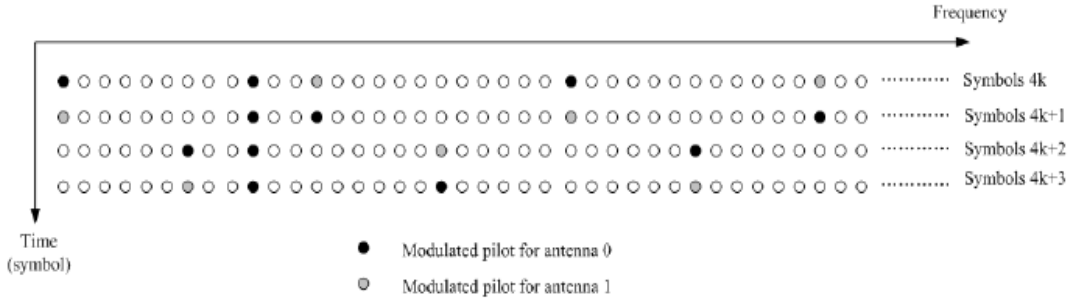

Figure 261—STC usage with FUSC

8.4.8.1.2.1.3 STC data mapping

In the STC zone, for spatial multiplexing, the mapping of modulated data after channel encoding to MIMO streams depends on the type of encoding (horizontal or vertical encoding).

For vertical encoding (num_layer = 1), the number of data slots used by the FEC encoder equals R times the number of physical slots allocated in the map, where R is the space time coding rate and equals the number of streams in case of spatial multiplexing. Denote the number of allocated physical slots by D (duration). The D × R data slots shall be encoded, including splitting the data into FEC blocks according to the concatenation rule, randomization, encoding, interleaving, and repetition, as specified in 8.4.9, and shall be mapped to QAM symbols. Then, the resulting QAM symbols shall be mapped in stream-first order into R streams as described in 8.4.8.

For example, if the rate is R = 2, and no precoding is used, then the 48 QAM symbols of the first data slot are mapped to the first 24 subcarriers of the first physical slot (in antenna first order, so that the even QAM symbols are mapped to antenna 0 and the odd QAM symbols to antenna 1), the next 48 symbols are mapped to subcarriers 25..47 of the first physical slot. The mapping continues to the second physical slot, and so on.

For horizontal encoding with rate *T*, (num_layer=*T*), the number of data slots used by the FEC encoder equals the number of physical slots allocated in the map, and T different bursts are encoded. Each burst is allocated to a stream.

8.4.8.1.2.2 STC decoding

The receiver waits for two symbols and combines them on a subcarrier basis according to Equation (76) and Equation (77) in 8.4.8.1.2.1.

8.4.8.1.3 Frequency hopping diversity coding (FHDC)

This scheme (as for STC) transmits two complex symbols, s_1 and s_2, using the multiple input single output channel (two Tx, one Rx). Allocation of subchannels for FHDC transmission shall be even numbered in the same OFDMA symbol, and the first subchannel shall have an even logical index.

The transmission is based on transmitting the FHDC allocated subchannels from both antennas in the following format:

— Antenna 0 transmits mapped carriers for subchannel X (S_1) onto subchannel X and mapped carriers for subchannel $X + 1$ (S_2) onto subchannel $X + 1$
— Antenna 1 transmits ($-S_2$*) onto subchannel X and (S_1*) onto subchannel $X + 1$

Receiver gets r_0 (reception of subchannel X) and r_1 (reception of subchannel $X + 1$), and the user shall extract signals S_1, S_2:

$$\begin{aligned} r_0 &= h_{x,0} \cdot S_1 - h_{x,1} \cdot S_2^* \\ r_1 &= h_{x+1,0} \cdot S_2 + h_{x+1,1} \cdot S_1^* \end{aligned} \tag{78}$$

These estimates benefit from second order diversity as in the 1Tx-2Rx Maximum Ratio Combining scheme. The DL preamble shall be transmitted for the duration of one OFDMA symbol from antenna #0 as shown in Figure 262, and subchannels used for FHDC are transmitted in adjunct pairs of subchannels.

The same data/pilot subcarrier structure as defined for the STC mode shall be used in the FHDC mode.

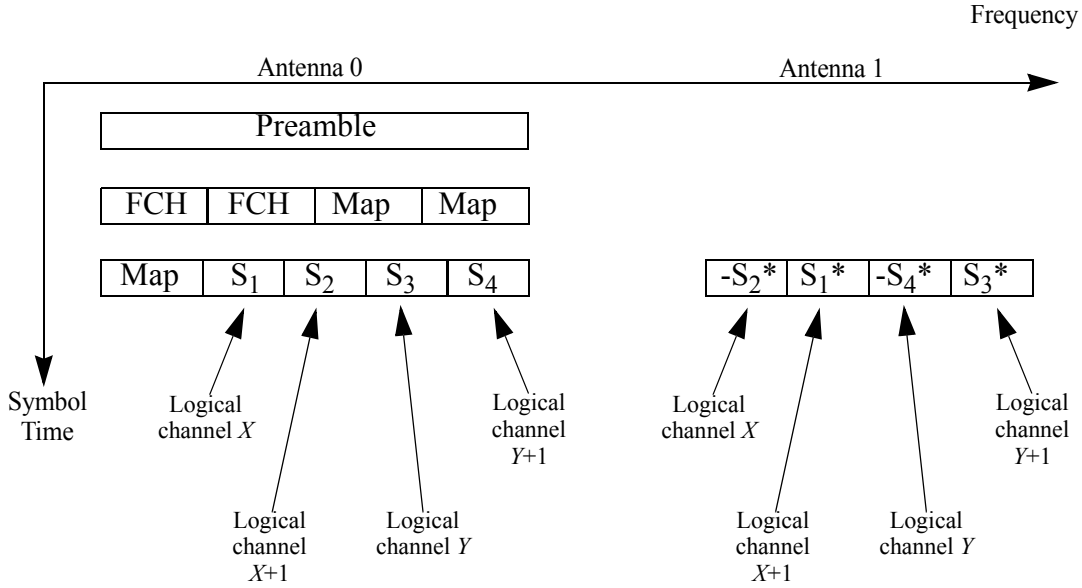

Figure 262—Example of using FHDC in PUSC

8.4.8.1.4 STC/FHDC configurations

Two transmission formats are allowed for the two antenna configuration, each format has it own capacity/diversity tradeoffs. The following matrices defines the transmission format with the row index indicating the antenna number and column index indicating the OFDMA symbol. The entries define the transmission from a subchannel used for this transmission configuration (the same operation is repeated for all subchannels used in this format).

Transmission format A uses Matrix A (space time coding rate = 1, as explained in 8.4.8.1.2 and 8.4.8.1.3):

$$A = \begin{bmatrix} S_1 & -(S_2)^* \\ S_2 & (S_1)^* \end{bmatrix} \tag{79}$$

Transmission format B uses Matrix B (space time coding rate = 2):

$$B = \begin{bmatrix} S_1 \\ S_2 \end{bmatrix} \tag{80}$$

8.4.8.1.5 UL using STC

A user-supporting transmission using STC configuration in the UL shall use a modified UL tile. The 2-Tx diversity data (STTD mode) or 2-Tx spatial multiplexing (SM mode) data that can be mapped onto each subcarrier. The mandatory tile shall be modified to accommodate those configurations.

In STTD mode, the tiles shall be allocated to subchannels and the data subcarriers enumerated as defined in 8.4.6.2. The pilots in each tile shall be split between the two antennas, and the data subcarriers shall be encoded in pairs after constellation mapping, as depicted in Figure 263. The data subcarriers transmitted from antenna #0 follow the original mapping defined in 8.4.6.2.

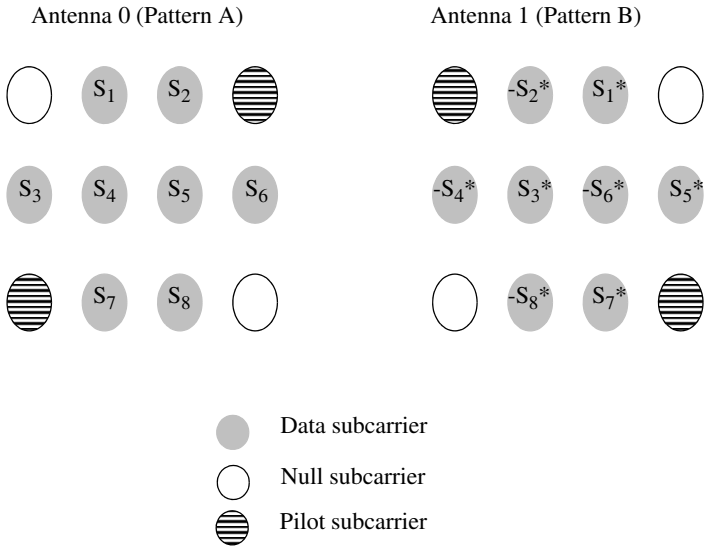

Figure 263—Mapping of data subcarriers in STTD mode

Two single Tx antenna SSs can perform collaborative spatial multiplexing onto the same subcarrier. In this case, one SS shall use the UL tile with pattern A, and the other SS shall use the UL tile with pattern B. The pilot patterns are depicted in Figure 263. Tx data shall be coded, interleaved, modulated, and mapped to time/frequency as in the non-MIMO case. A single user having two antennas may do UL spatial multiplexing either using horizontal coding or vertical coding. For horizontal coding, two bursts are first individually modulated and then transmitted one per antenna (first burst on antenna #0, the second burst on antenna #1). For vertical coding, a single burst is modulated and then transmitted according to the mapping order defined in 8.4.3.4 with the modification that on each subchannel, two consecutive slots are mapped instead of a single slot. The first slot of each slot pair is transmitted using antenna #0, while the second slot is transmitted using antenna #1.

To do spatial multiplexing with either vertical or horizontal coding, a subscriber needs to signal both its antennas. In order to signal both antennas, the subscriber uses both pilot patterns A and B. Antenna #0 shall be signaled using pattern A, and antenna #1 using pattern B. For non-MIMO transmissions, only antenna #0 shall be used.

Two single Tx antenna SSs can perform collaborative spatial multiplexing onto the same subchannel. In this case, the one SS should use the UL tile with pilot pattern A, and the other SS should use the UL tile with pilot pattern B. Also, two dual Tx antenna SSs can perform collaborative spatial multiplexing onto the same subchannel. In this case, the one SS should use the UL tile with the pilot pattern A, B; and the other SS should use the UL tile with the pilot pattern C, D through MIMO UL Enhanced IE. Pilot patterns are illustrated in the Figure 263 and Figure 264.

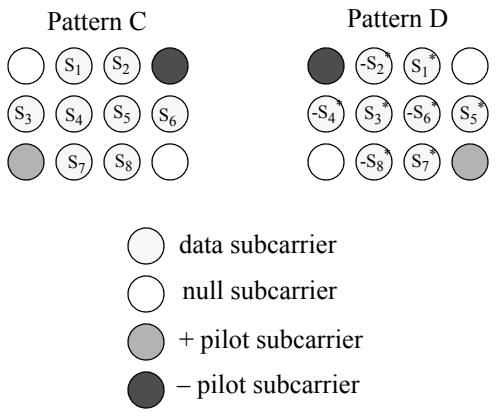

Figure 264—Pilot patterns in UL PUSC tile

8.4.8.1.6 STC of two antennas using directivity through four antennas

The STC scheme for two antennas may be enhanced by using four antennas at the transmission site. Two antennas are now being used in order to transmit each symbol (the first antenna transmits the signal as defined in 8.4.8.1.2 and 8.4.8.1.3, and the second transmits the same signal with a complex multiplication factor). The BS may change the antenna weights using feedback from the user as described in 8.4.11.2. This scheme is presented in Figure 265.

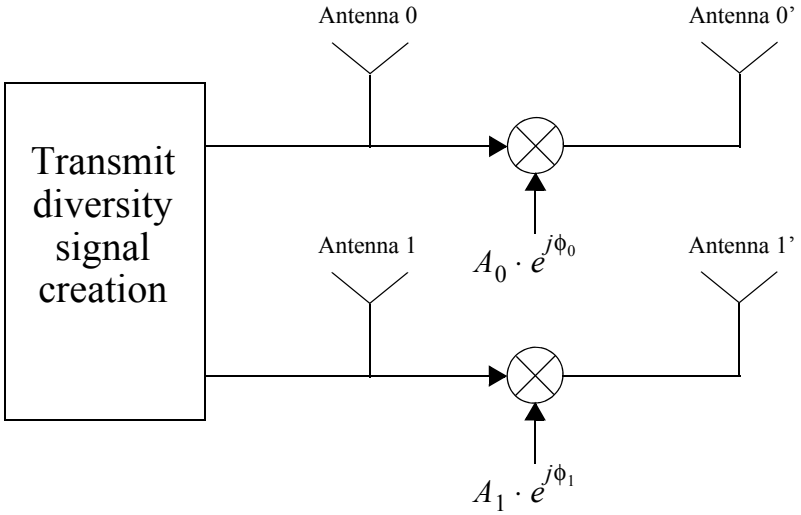

Figure 265—Illustration of Transmit diversity using four antennas

This method does not change the channel estimation process of the user; therefore, this scheme could be implemented without any changes made to the Tx diversity user.

8.4.8.2 STC for four antennas

The STC schemes could be further enhanced by using four antennas at the transmission site. This configuration could be only used using STC encoding with PUSC or FUSC scheme.

8.4.8.2.1 STC for four antennas using PUSC

For this configuration, the basic cluster structure is changed (as indicated in Figure 266) to accommodate the transmission from four antennas. (Pilots for antennas #2/3 override data subcarriers. The data puncturing for CC or the data truncation for CTC shall be performed after STC encoding and before IFFT packet mapping.)

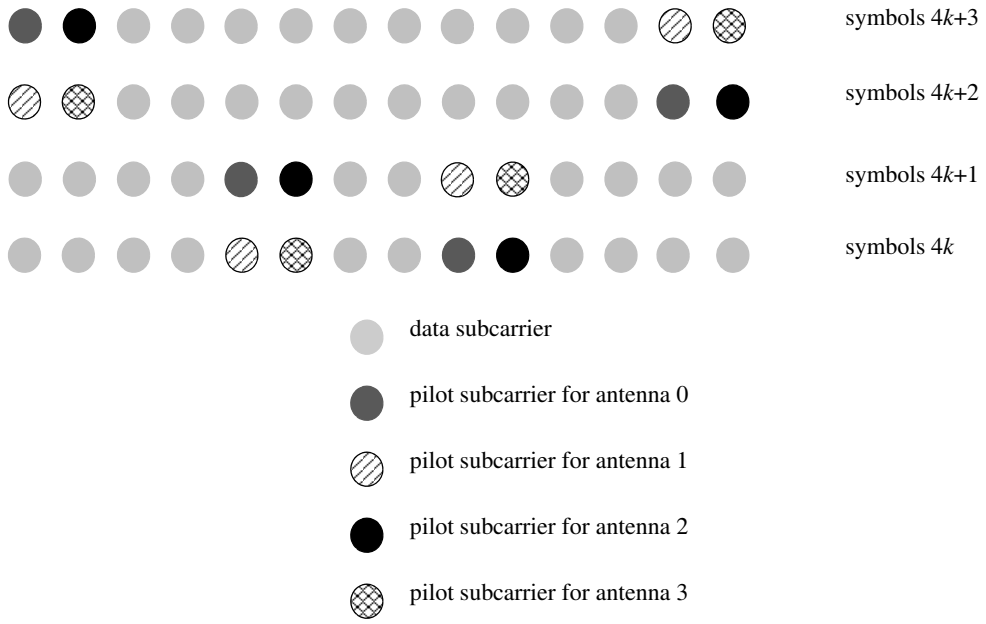

Figure 266—Cluster structure for STC PUSC using four antennas

8.4.8.2.2 STC for four antennas using FUSC

For the FUSC configuration, the pilots embedded within the symbol shall be further divided. The pilots shall be transmitted with a structure including four time symbols (repeating itself every four symbols) as follows:

Even symbols: antenna 0 uses VariableSet#0 and ConstantSet#0, antenna 1 uses VariableSet#1 and ConstantSet#1, antenna 2 uses indices of (VariableSet#0+1), antenna 3 uses indices of (VariableSet#1+1)

Odd symbols: antenna 0 uses VariableSet#1, antenna 1 uses VariableSet#0, antenna 2 uses indices of (VariableSet#1+1) and (ConstantSet#0), antenna 3 uses indices of (VariableSet#0+1) and (Constant-Set#1)

In STC transmission the *FUSC_SymbolNumber* in Equation (62) is replaced with *floor*(*FUSC_SymbolNumber/2*) so that variable pilots shall move every second symbol. The FUSC permutation is performed on the data subcarriers remaining after allocating the pilots for antennas 0,1 and the constant pilots. The data subcarriers that overlap with variable pilots allocated to antennas 2,3 are replaced with pilots. The data puncturing for CC or the data truncation for CTC shall be performed after STC encoding and before IFFT subcarrier mapping. See Figure 267.

8.4.8.2.3 STC configurations

Several transmission formats are allowed for this configuration. Each format has it own capacity/diversity tradeoffs.

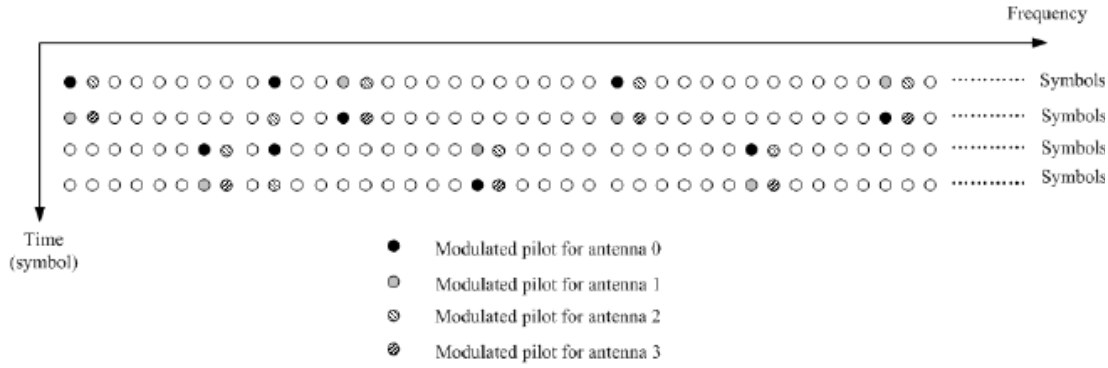

Figure 267—STC usage with FUSC

The following matrices define the transmission format with the row index indicating the antenna number and column index indicating the OFDMA symbol. The entries define the transmission from a subchannel used for this transmission configuration (the same operation is repeated for all subchannels used in this format).

Transmission format A uses Matrix A (space time coding rate = 1):

$$A = \begin{bmatrix} S_1 & -(S_2)^* & 0 & 0 \\ S_2 & (S_1)^* & 0 & 0 \\ 0 & 0 & S_3 & -(S_4)^* \\ 0 & 0 & S_4 & (S_3)^* \end{bmatrix} \tag{81}$$

Transmission format B uses Matrix B (space time coding rate = 2):

$$B = \begin{bmatrix} S_1 & -(S_2)^* & S_5 & -(S_7)^* \\ S_2 & (S_1)^* & S_6 & -(S_8)^* \\ S_3 & -(S_4)^* & S_7 & (S_5)^* \\ S_4 & (S_3)^* & S_8 & (S_6)^* \end{bmatrix} \tag{82}$$

Transmission format C uses Matrix C (space time coding rate = 4):

$$C = \begin{bmatrix} S_1 \\ S_2 \\ S_3 \\ S_4 \end{bmatrix} \tag{83}$$

8.4.8.2.4 MIMO MDHO-based macro-diversity transmission

An MDHO zone may be defined by the OFDMA DL STC Zone IE by setting the IDcell = 0. For the MDHO-BSs joint transmission, for the STC capable MS, the total *N* antennas of MDHO-BSs constitute an antenna pool. A predetermined antenna selection formula can be used. The MIMO Tx formats are specified in 8.4.8.1.4 for 2-Tx-antenna case and 8.4.8.2.3 for 4-Tx-antenna case. The MIMO pilot transmission is 2-antenna transmission for PUSC and FUSC and shall follow the arrangement of the Figure 260 and 8.4.8.1.2.1.2, respectively (see Figure 209 for the optional FUSC and AMC permutations). The MIMO pilot transmission is 4-antenna transmission for PUSC and FUSC shall follow the arrangement of the Figure 266 and 8.4.8.2.2, respectively (see Figure 231 for the optional FUSC and AMC permutations). The unselected antennas are set to the null transmission.

MS shall demodulate signal in the same procedure as in non-MDHO mode if it does not receive MIMO_in_Another_BS_IE() or Macro_MIMO_DL_Basic_IE(). The same data are transmitted from multiple BSs in the same data regions. MS performs RF or diversity combining.

MS shall perform soft data combining when it receives MIMO_in_Another_BS_IE(). In this case, the same data are transmitted in the same or different data region.

The MS shall demodulate signal in the same procedure as in non-MDHO mode, then it shall perform soft combining for those data regions with the same packet index when it receives Macro_MIMO DL Basic IE(). This scheme benefits from combination of RF, diversity combining, and soft data combining.

8.4.8.3 STC for the optional zones in the DL

Three optional zones for the DL—the optional FUSC, optional AMC, and the optional PUSC-ASCA zones—are described in 8.4.6.1.2.3, 8.4.6.3, and 8.4.6.4.1, respectively. STC may be used to improve system performance for these zones and an example of Tx diversity (TD) with multiple transmitters and multiple receivers is shown in Figure 268.

In Figure 268, the STC encoder operates on input data symbols sequentially and distributes the antenna specific data symbols to each antenna path. The block of subcarrier mapping and PRBS function denotes data truncation or puncturing, if needed, pilot insertion, IFFT input packing and each subcarrier multiplied by the factor $2\times(1/2-w_k)$ according to the subcarrier index k in 8.4.9.4.1. The data truncation for CTC or the puncturing of CC encoder shall be required for 3 Tx and 4 Tx BS for the optional AMC and the optional FUSC zones in the DL, and required for 2 Tx for the optional PUSC in the UL.

This figure also represents the usage of Matrix B with vertical encoding for 3 or 4 Tx BS.

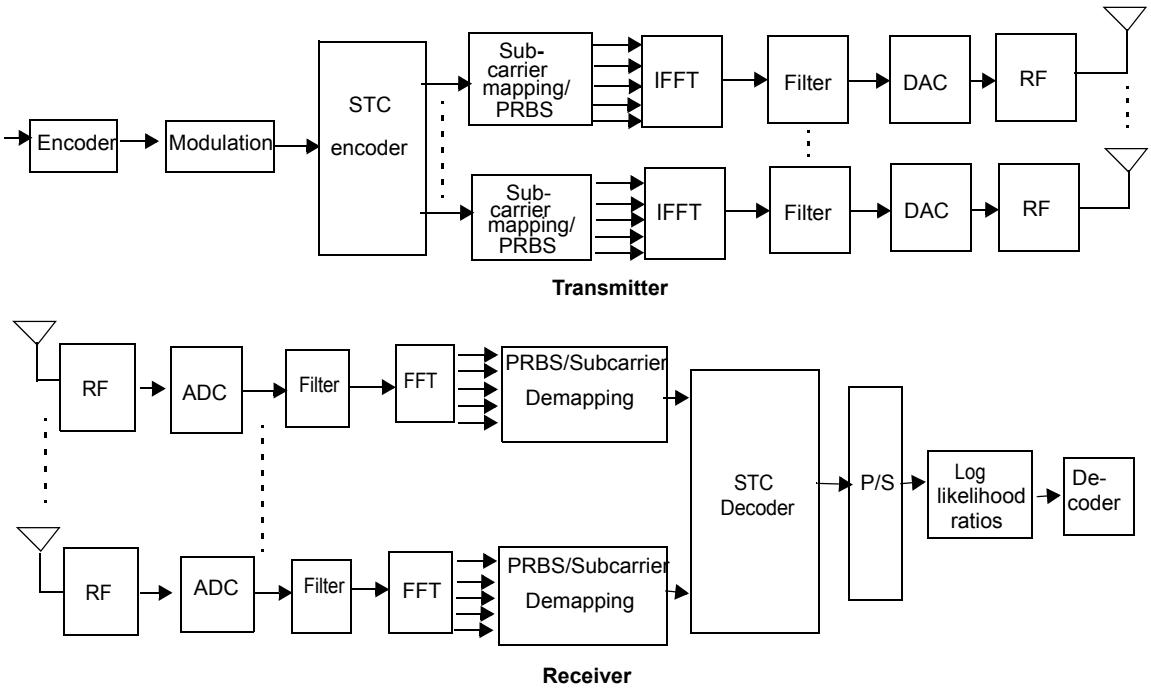

Figure 268—Example of STC for optional zones in DL (Matrix A for 2, 3, or 4 Tx and Matrix B for 3 or 4 Tx)

For the usage of Matrix B with horizontal encoding for 3 or 4 Tx BS, an exemplary figure is shown in Figure 269.

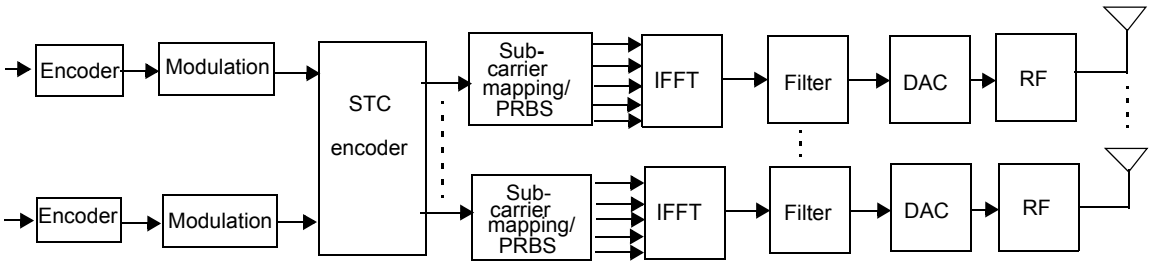

Figure 269—Example of Matrix B with horizontal encoding for 3 or 4 Tx BS for optional zones in DL

Figure 270 illustrates the usage of Matrix C with vertical encoding. The modulated symbols are distributed sequentially from the top to the bottom output paths.

A “layer” is defined as an information path fed to the STC encoder as an input, and a “Stream” is defined as each information path encoded by the STC encoder that is passed to subcarrier mapping and sent through one antenna, or passed to the beamformer. Therefore, the number of layers in a system with vertical encoding is one, but in case of horizontal encoding it depends on the number of encoding/modulation paths.

The number of streams in both vertical and horizontal encoding systems is the same as the number of output paths of the STC encoder.

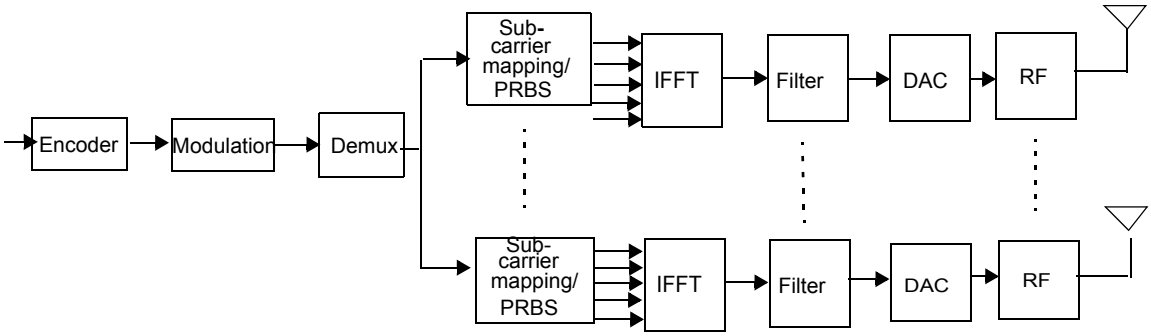

Figure 270—Example of Matrix C with vertical encoding for 2, 3, or 4 Tx BS for optional zones in DL

An exemplary figure for Matrix C with horizontal encoding is provided in Figure 271.

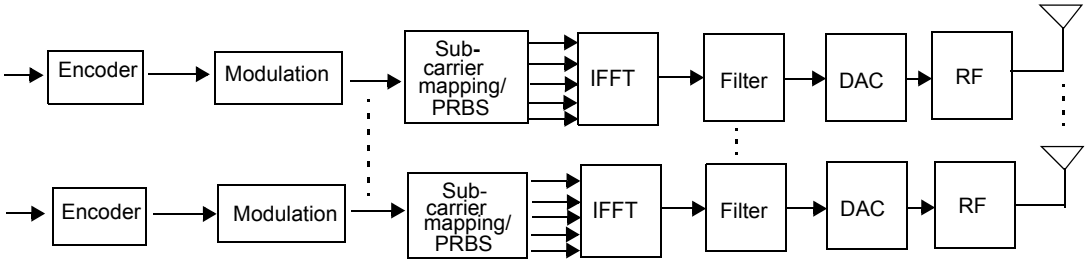

Figure 271—Example of Matrix C with horizontal encoding for 2, 3 or 4 Tx BS for optional zones in DL

8.4.8.3.1 Symbol structure for optional AMC and optional FUSC

8.4.8.3.1.1 Allocation of pilot subcarriers

The two-stream pilot pattern is defined in Figure 272.

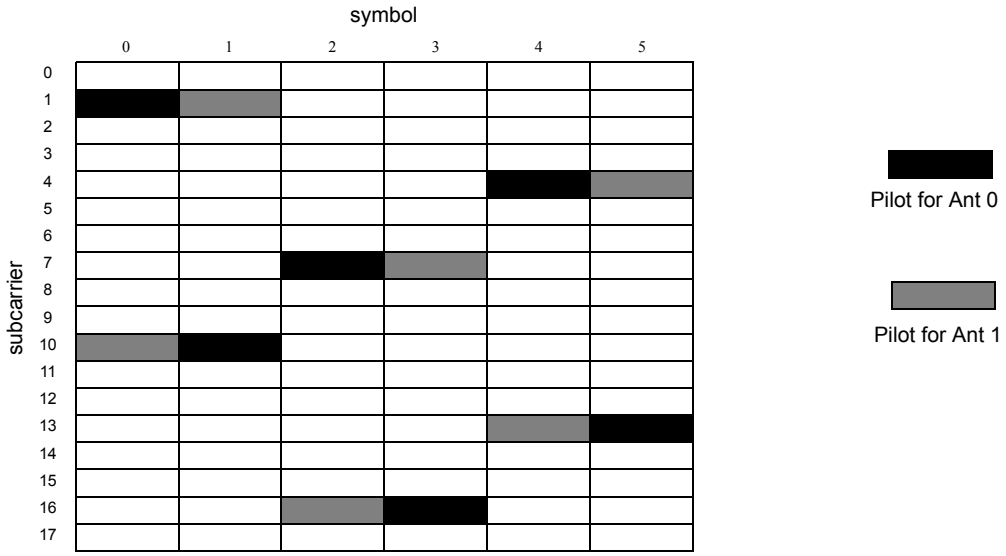

Figure 272—Pilot allocation for 2-antenna BS for the optional FUSC and the optional AMC zones

Pilot Location for Antenna #0 = $18k+9 \cdot \mathrm{mod}(m,2) + 3[\mathrm{floor}(m/2) \cdot 2 \bmod 3]+1$
Pilot Location for Antenna #1 = $18k + 9 \cdot \mathrm{mod}(m+1,2) + 3[\mathrm{floor}(m/2) \cdot 2 \bmod 3]+1$
for m = [symbol index], symbol index 0 is the first symbol (except midamble) in which the STC Zone is applied, k is the subchannel index.

In other words, symbol index shall be reset to 0 when a new STC Zone is applied.

For 3-antenna BS, pilot allocation pattern shall first be changed as in the 2-antenna BS case, and then the neighboring two subcarriers shall be further allocated as pilots. This is shown in Figure 273.

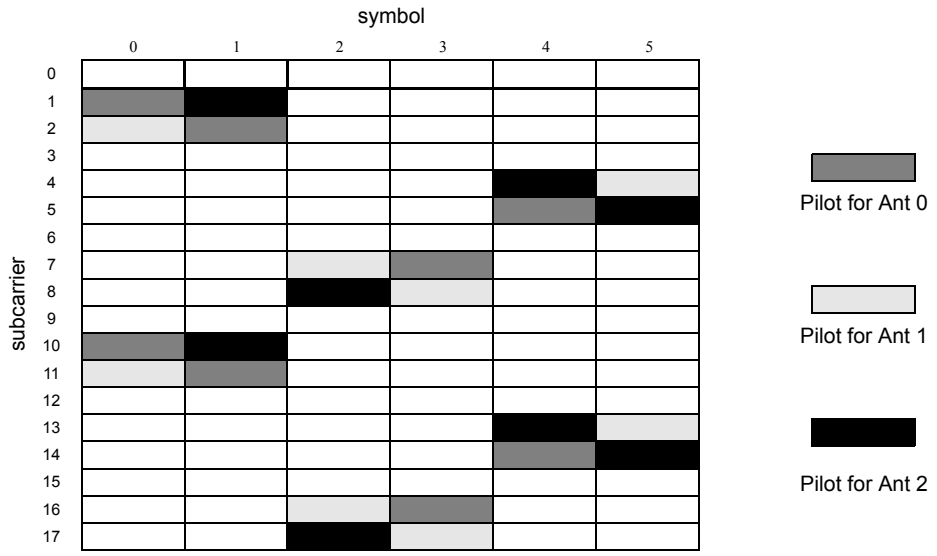

Figure 273—Pilot allocation for 3-antenna BS for the optional FUSC and the optional AMC zones

For 4-antenna BS, pilot pattern shall first be changed as in the 2-antenna BS case, and then the neighboring two subcarriers shall be further punctured for antenna 2 and 3 as is shown in Figure 274.

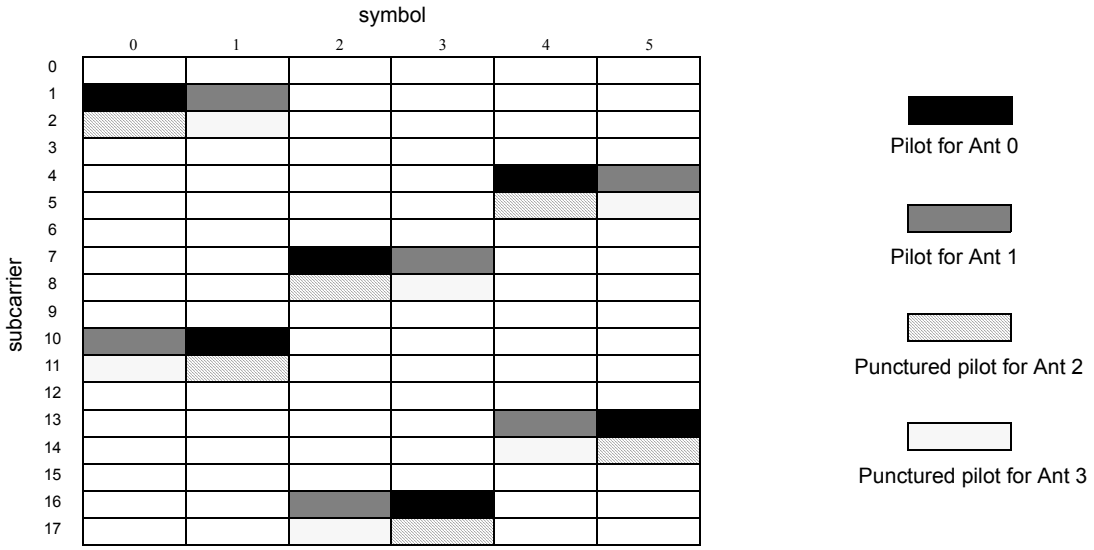

Figure 274—Pilot allocation for 4-antenna BS for the optional FUSC and the optional AMC zones

Pilot Location for Antenna #0 = $18k + 9 \bmod(m,2) + 3[\mathrm{floor}(m/2)\ 2 \bmod 3]+1$
Pilot Location for Antenna #1 = $18k + 9 \bmod(m+1,2) + 3[\mathrm{floor}(m/2)\ 2 \bmod 3]+1$
Pilot Location for Antenna #2 = $18k + 9 \bmod(m,2) + 3[\mathrm{floor}(m/2)\ 2 \bmod 3]+2$
Pilot Location for Antenna #3 = $18k + 9 \bmod(m+1,2) + 3[\mathrm{floor}(m/2)\ 2 \bmod 3]+2$
for m = [symbol index], symbol index 0 is the first symbol (except midamble) in which the STC Zone is applied, k is defined in 8.4.6.1.2.3.

In other words, symbol index shall be reset to 0 when a new STC Zone is applied.

8.4.8.3.1.2 Allocation of data subchannels

8.4.8.3.1.2.1 STC Mapping for optional AMC permutation

For the optional AMC permutation in STC zone, 2x3 (2 bins by 3 symbols) format is used. The subcarrier permutation represented by Equation (75) in 8.4.6.3 shall not be applied for the optional AMC permutation within STC zones (where STC field in STC DL Zone IE is not equal to 0b00). The pilot pattern of 8.4.8.3.1.1 shall be used.

For 2-antenna Matrix A in 8.4.8.3.3 the bursts are required to have six symbol granularity and begin on a six symbol boundary. In the first stage the data is first mapped frequency-first to each 2x3 slot, and frequency-first over the slots of the allocation as depicted in Figure 220. Then at the second stage Matrix A encoding is performed over each pair of QAM symbols which were assigned to the same subcarrier index over two symbols. The symbol pairs for Matrix A encoding numbered from the beginning of the STC zone are $2n$, $2n+1$ ($n \geq 0$). Note that since the slot duration does not divide by 2, the Matrix A encoding involves QAM symbols potentially belonging to different slots. An illustration of the mapping rule for the antenna #0 is shown in Figure 275, assuming 2 Tx with Matrix A for a block of two slots in a single subchannel with a 2x3 AMC slot. Figure 276 illustrates as an example encoding of 192 QAM symbols into over two subchannels and six symbols for Matrix A.

Antenna #0

s_0	$-s_{16}^*$	s_{32}	$-s_{48}^*$	s_{64}	$-s_{80}^*$
		s_{33}	$-s_{49}^*$	s_{65}	$-s_{81}^*$
s_1	$-s_{17}^*$	s_{34}	$-s_{50}^*$	s_{66}	$-s_{82}^*$
s_2	$-s_{18}^*$	s_{35}	$-s_{51}^*$	s_{67}	$-s_{83}^*$
s_3	$-s_{19}^*$	s_{36}	$-s_{52}^*$		
s_4	$-s_{20}^*$	s_{37}	$-s_{53}^*$	s_{68}	$-s_{84}^*$
s_5	$-s_{21}^*$	s_{38}	$-s_{54}^*$	s_{69}	$-s_{85}^*$
s_6	$-s_{22}^*$			s_{70}	$-s_{86}^*$
s_7	$-s_{23}^*$	s_{39}	$-s_{55}^*$	s_{71}	$-s_{87}^*$
s_8	$-s_{24}^*$	s_{40}	$-s_{56}^*$	s_{72}	$-s_{88}^*$
		s_{41}	$-s_{57}^*$	s_{73}	$-s_{89}^*$
s_9	$-s_{25}^*$	s_{42}	$-s_{58}^*$	s_{74}	$-s_{90}^*$
s_{10}	$-s_{26}^*$	s_{43}	$-s_{59}^*$	s_{75}	$-s_{91}^*$
s_{11}	$-s_{27}^*$	s_{44}	$-s_{60}^*$		
s_{12}	$-s_{28}^*$	s_{45}	$-s_{61}^*$	s_{76}	$-s_{92}^*$
s_{13}	$-s_{29}^*$	s_{46}	$-s_{62}^*$	s_{77}	$-s_{93}^*$
s_{14}	$-s_{30}^*$			s_{78}	$-s_{94}^*$
s_{15}	$-s_{31}^*$	s_{47}	$-s_{63}^*$	s_{79}	$-s_{95}^*$

s — Data subcarrier

Pilot / Null subcarrier

Figure 275—Data mapping example in the optional AMC Zone with 2 Tx antenna and Matrix A

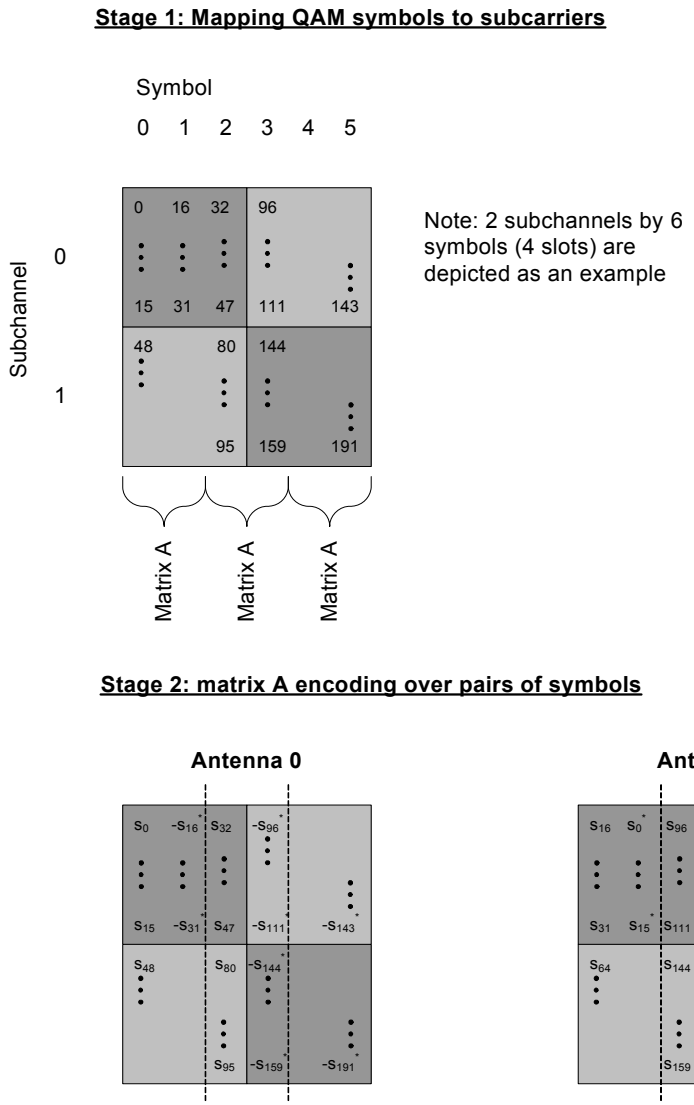

Figure 276—Example of 2TX Matrix A mapping for AMC 2x3 for a burst of 2 subchannels by 6 symbols

For 2-antenna vertically encoded Matrix B in the optional AMC permutation, modulated data symbols shall be sequentially mapped for two Tx antennas along the subcarriers of the first symbol in antenna-first order. The mapping inside the AMC slot continues in an ascending manner in subcarriers first and then proceeds to the next symbol in time. An illustration of the mapping rule for the antenna #0 is shown in Figure 277, assuming 2 Tx with vertically encoded Matrix B for a block of 2 slots in one subchannel. Figure 277 also shows the mapping rule for 2-antenna horizontally encoded Matrix B in the optional AMC permutation, where each encoded stream is separately mapped to the corresponding antenna.

For a 3- or 4-antenna Matrix A and Matrix B in 8.4.8.3.4 and 8.4.8.3.5, STC encoded data symbols shall be mapped at two adjacent subcarriers over two OFDMA symbols. When the subcarrier pair (over two symbols) at frequency k+1 is allocated to pilots for antenna #0 or #1 and the pair at frequency k+2 is allocated to pilots for antenna #2 or #3, then the pair at frequency k+3 shall be jointly encoded with the pair at frequency k. This is illustrated in Figure 278, where blocks of 2 convolutional coded (CC) slots and

Antenna #0 with vertical encoding

s_0	s_{32}	s_{64}	s_{96}	s_{128}	s_{160}
		s_{66}	s_{98}	s_{130}	s_{162}
s_2	s_{34}	s_{68}	s_{100}	s_{132}	s_{164}
s_4	s_{36}	s_{70}	s_{102}	s_{134}	s_{166}
s_6	s_{38}	s_{72}	s_{104}		
s_8	s_{40}	s_{74}	s_{106}	s_{136}	s_{168}
s_{10}	s_{42}	s_{76}	s_{108}	s_{138}	s_{170}
s_{12}	s_{44}			s_{140}	s_{172}
s_{14}	s_{46}	s_{78}	s_{110}	s_{142}	s_{174}
s_{16}	s_{48}	s_{80}	s_{112}	s_{144}	s_{176}
		s_{82}	s_{114}	s_{146}	s_{178}
s_{18}	s_{50}	s_{84}	s_{116}	s_{148}	s_{180}
s_{20}	s_{52}	s_{86}	s_{118}	s_{150}	s_{182}
s_{22}	s_{54}	s_{88}	s_{120}		
s_{24}	s_{56}	s_{90}	s_{122}	s_{152}	s_{184}
s_{26}	s_{58}	s_{92}	s_{124}	s_{154}	s_{186}
s_{28}	s_{60}			s_{156}	s_{188}
s_{30}	s_{62}	s_{94}	s_{126}	s_{158}	s_{190}

Antenna #0 with horizontal encoding

s_0^0	s_{16}^0	s_{32}^0	s_{48}^0	s_{64}^0	s_{80}^0
		s_{33}^0	s_{49}^0	s_{65}^0	s_{81}^0
s_1^0	s_{17}^0	s_{34}^0	s_{50}^0	s_{66}^0	s_{82}^0
s_2^0	s_{18}^0	s_{35}^0	s_{51}^0	s_{67}^0	s_{83}^0
s_3^0	s_{19}^0	s_{36}^0	s_{52}^0		
s_4^0	s_{20}^0	s_{37}^0	s_{53}^0	s_{68}^0	s_{84}^0
s_5^0	s_{21}^0	s_{38}^0	s_{54}^0	s_{69}^0	s_{85}^0
s_6^0	s_{22}^0			s_{70}^0	s_{86}^0
s_7^0	s_{23}^0	s_{39}^0	s_{55}^0	s_{71}^0	s_{87}^0
s_8^0	s_{24}^0	s_{40}^0	s_{56}^0	s_{72}^0	s_{88}^0
		s_{41}^0	s_{57}^0	s_{73}^0	s_{89}^0
s_9^0	s_{25}^0	s_{42}^0	s_{58}^0	s_{74}^0	s_{90}^0
s_{10}^0	s_{26}^0	s_{43}^0	s_{59}^0	s_{75}^0	s_{91}^0
s_{11}^0	s_{27}^0	s_{44}^0	s_{60}^0		
s_{12}^0	s_{28}^0	s_{45}^0	s_{61}^0	s_{76}^0	s_{92}^0
s_{13}^0	s_{29}^0	s_{46}^0	s_{62}^0	s_{77}^0	s_{93}^0
s_{14}^0	s_{30}^0			s_{78}^0	s_{94}^0
s_{15}^0	s_{31}^0	s_{47}^0	s_{63}^0	s_{79}^0	s_{95}^0

s Data subcarrier

Pilot / Null subcarrier

(s_x^0 : 0th stream, STC coded Symbol)

Figure 277—Data mapping example in the optional AMC zone with 2 Tx antenna and Matrix B

convolutional turbo coded (CTC) slots are separately shown for an allocation of 1 subchannels by 6 symbols. The mapping starts at the lowest numbered subcarriers of the lowest slot and continues in an ascending manner in subchannels first and then proceeds to the next two symbols in time.

For a 3- and 4-antenna vertically/horizontally encoded Matrix C in the optional AMC permutation, the same mapping rule for 2-antenna vertically/horizontally encoded Matrix B shall be applied on the same frequency-time block with the 3- or 4-antenna pilot pattern.

8.4.8.3.1.2.2 STC Mapping for optional FUSC permutation

For the optional FUSC permutation in STC zone, the data subchannels shall be allocated for two consecutive OFDMA symbols. For a 2-antenna Matrix A in 8.4.8.3.3, STC encoded data symbols shall be time mapped over two OFDMA symbols. The mapping starts at the lowest numbered subcarriers of lowest slot and continues in an ascending manner in subchannels first and then, if needed, proceeds to the next two symbols in time.

For a 2-antenna vertically encoded Matrix B in 8.4.8.3.3 for the optional FUSC permutation, the data subchannels shall be allocated for two consecutive OFDMA symbols and the modulated data symbols shall be sequentially mapped for two Tx antennas along the subcarriers in the symbol. The mapping continues in an ascending manner in subchannels first and then proceeds to the next symbol in time. For a 2-antenna horizontally encoded Matrix B in 8.4.8.3.3 each encoded stream is separately mapped to the corresponding antenna.

Antenna #0 with CC

s_0	$-s_1^*$	s_{32}	$-s_{33}^*$	s_{64}	$-s_{65}^*$
		s_{36}	$-s_{37}^*$	s_{68}	$-s_{69}^*$
s_4	$-s_5^*$				
		s_{40}	$-s_{41}^*$		
s_8	$-s_9^*$				
		s_{44}	$-s_{45}^*$		
s_{12}	$-s_{13}^*$			s_{76}	$-s_{77}^*$
s_{16}	$-s_{17}^*$	s_{48}	$-s_{49}^*$	s_{80}	$-s_{81}^*$
		s_{52}	$-s_{53}^*$	s_{84}	$-s_{85}^*$
s_{20}	$-s_{21}^*$				
		s_{56}	$-s_{57}^*$		
s_{24}	$-s_{25}^*$				
		s_{60}	$-s_{61}^*$		
s_{28}	$-s_{29}^*$			s_{92}	$-s_{93}^*$

Antenna #0 with CTC

s_0	$-s_1^*$	s_{28}	$-s_{29}^*$	s_{56}	$-s_{57}^*$
		s_{32}	$-s_{33}^*$	s_{60}	$-s_{61}^*$
s_4	$-s_5^*$	s_{36}	$-s_{37}^*$		
s_8	$-s_9^*$	s_{40}	$-s_{41}^*$	s_{64}	$-s_{65}^*$
s_{12}	$-s_{13}^*$			s_{68}	$-s_{69}^*$
		s_{44}	$-s_{45}^*$	s_{72}	$-s_{73}^*$
s_{16}	$-s_{17}^*$	s_{48}	$-s_{49}^*$	s_{76}	$-s_{77}^*$
s_{20}	$-s_{21}^*$	s_{52}	$-s_{53}^*$		
s_{24}	$-s_{25}^*$			s_{80}	$-s_{81}^*$

s Data Subcarrier

PILOT Pilot / Null Subcarrier

Figure 278—Data mapping with CC in the optional AMC Zone with 4 Tx antenna and Matrix A

For a 3- and 4-antenna Matrix A and Matrix B in 8.4.8.3.3 and 8.4.8.3.4 for the optional FUSC permutation, STC encoded data symbols shall be mapped at two logical subcarriers over two OFDMA symbols. When the subcarrier pair (over two symbols) at logical frequency k+1 is allocated to pilots for antenna #0 or #1 and the pair at logical frequency k+2 is allocated to pilots for antenna #2 or #3, then the pair at logical frequency k+3 shall be jointly encoded with the pair at logical frequency k. The mapping starts at the lowest numbered subcarriers of the lowest slot and continues in an ascending manner in subchannels first and then proceeds to the next two symbols in time if needed. Data puncturing for CC or truncation for CTC shall be performed in a similar manner as in the optional AMC zone.

For 3- and 4-antenna vertically/horizontally encoded Matrix C in the optional FUSC permutation, the same mapping rule for 2-antenna vertically/horizontally encoded Matrix B shall be applied on the same frequency-time block with the 3- or 4-antenna pilot pattern.

A mapping example of a DL burst for the optional FUSC using 4-antenna transmission is provided in the following:

Parameters are as follows:

— IDcell = 1
— Symbol index m = 0 (first symbol in STC zone)
— Subchannel index = 0
— Number of subchannels = 1
— 1024-FFT

The indices of 48 data subcarriers in subchannel #0 for the optional FUSC are as follows:

3	23	46	58	79	104	121	132	156	170	196	215	231	245
254	273	293	316	328	349	374	391	402	426	440	466	485	501
515	524	543	563	586	598	619	644	661	672	696	710	736	755
771	785	794	813	833	856								

If Convolutional Coding is used for 4 Tx antennas, data tones at subcarrier indices = {245,254,515,524,785,794} shall be punctured for additional pilots. If Convolutional Turbo Coding is used for 4 Tx antennas, the last 6 of 48 data tones shall be first truncated and the remaining 42 data tones shall be mapped at the following indices:

3	23	46	58	79	104	121	132	156	170	196	215	231	273
293	316	328	349	374	391	402	426	440	466	485	501	543	563
586	598	619	644	661	672	696	710	736	755	771	813	833	856

8.4.8.3.1.2.3 Burst packing of spatial multiplexed streams with CTC HARQ

For multiple spatial rate transmission and HARQ CTC, the packet shall be formed by concatenating multiple N_{EP}/N_{SCH} FEC codewords together. For the case of vertical encoding (number of layers = 1), there shall be only 1 CRC check at the end of the last codeword. The first block is of size N_{EP} and the second block of size N_{EP}-16 bits. For the case of horizontal encoding (number of layers >1), each burst shall be a separate N_{EP}/N_{SCH} pair with separate CRC. The randomization seed shall be reset for all of the N_{EP}/N_{SCH} pairs in the combined codeword. Figure 277 shows an example of vertically encoded rate 2 with CTC HARQ transmission.

8.4.8.3.2 Symbol structure for the optional PUSC-ASCA

Symbol structure is defined in 8.4.6.3.1, pilots division between antennas per cluster for the STC/MIMO operation shall follow the division in the PUSC mode as defined in 8.4.8.1 and 8.4.8.2. Pilots may optionally be beamformed or precoded.

8.4.8.3.3 Transmission schemes for 2-antenna BS in DL

The following matrices define the transmission format with the row index indicating antenna number and column index indicating OFDMA symbol time. For both DL permutation zones with 2-antenna BS, one of the following three transmission matrices shall be used:

$$A = \begin{bmatrix} S_i & -S^*_{i+1} \\ S_{i+1} & S^*_i \end{bmatrix}$$

$$B = \begin{bmatrix} S_i \\ S_{i+1} \end{bmatrix}$$

$$C = \frac{1}{\sqrt{1+r^2}} \begin{pmatrix} S_i + jr \cdot S_{i+3} & r \cdot S_{i+1} + S_{i+2} \\ S_{i+1} - r \cdot S_{i+2} & jr \cdot S_i + S_{i+3} \end{pmatrix}, r = \frac{-1+\sqrt{5}}{2}$$

where S_i and S_{i+1} in B may be encoded in different rates.

8.4.8.3.4 Transmission schemes for 3-antenna BS in DL

The definitions in this subclause are applicable to modes that support STC for 3-antenna Tx.

For 3-antenna BS, one of the three transmission matrices, A, B, or C, shall be used.

Let the complex symbols to be transmitted be x_1, x_2, x_3 x_4, which take values from a square QAM constellation; let $s_i = x_i e^{j\theta}$ for i = 1, 2, . . ., 8,

where $\theta = \tan^{-1}\left(\frac{1}{3}\right)$; and let

$\tilde{s}_1 = s_{1I} + js_{3Q}; \tilde{s}_2 = s_{2I} + js_{4Q}; \tilde{s}_3 = s_{3I} + js_{1Q}; \tilde{s}_4 = s_{4I} + js_{2Q}$ where $s_i = s_{iI} + js_{iQ}$.

The proposed Space-Time-Frequency code (over two OFDMA symbols and two subcarriers where the first two columns refer to the first subcarrier over two OFDMA symbols and last two columns refer to the second subcarrier over two OFMDA symbols) for 3Tx-Rate 1 configuration with diversity order 3 is given in three permuted versions as shown in Equation (84).

$$A_1 = \begin{bmatrix} \tilde{S}_1 & -\tilde{S}_2^* & 0 & 0 \\ \tilde{S}_2 & \tilde{S}_1^* & \tilde{S}_3 & -\tilde{S}_4^* \\ 0 & 0 & \tilde{S}_4 & \tilde{S}_3^* \end{bmatrix} \tag{84}$$

$$A_2 = \begin{bmatrix} \tilde{S}_1 & -\tilde{S}_2^{\ *} & \tilde{S}_3 & -\tilde{S}_4^* \\ \tilde{S}_2 & \tilde{S}_1^* & 0 & 0 \\ 0 & 0 & \tilde{S}_4 & \tilde{S}_3^* \end{bmatrix}$$

$$A_3 = \begin{bmatrix} \tilde{S}_1 & -\tilde{S}_2^* & 0 & 0 \\ 0 & 0 & \tilde{S}_3 & -\tilde{S}_4^* \\ \tilde{S}_2 & \tilde{S}_1^* & \tilde{S}_4 & \tilde{S}_3^* \end{bmatrix}$$

where the ML decoding can be achieved by symbol-by-symbol decoding.

The Matrix B is shown in Equation (85).

$$B_1 = \begin{bmatrix} \sqrt{\frac{3}{4}} & 0 & 0 \\ 0 & \sqrt{\frac{3}{4}} & 0 \\ 0 & 0 & \sqrt{\frac{3}{2}} \end{bmatrix} \begin{bmatrix} \tilde{S}_1 & -\tilde{S}_2^* & \tilde{S}_5 & -\tilde{S}_6^* \\ \tilde{S}_2 & \tilde{S}_1^* & \tilde{S}_6 & \tilde{S}_5^* \\ \tilde{S}_7 & -\tilde{S}_8^* & \tilde{S}_3 & -\tilde{S}_4^* \end{bmatrix} \tag{85}$$

$$B_2 = \begin{bmatrix} 0 & 1 & 0 \\ 0 & 0 & 1 \\ 1 & 0 & 0 \end{bmatrix} B_1$$

$$B_3 = \begin{bmatrix} 0 & 0 & 1 \\ 1 & 0 & 0 \\ 0 & 1 & 0 \end{bmatrix} B_1$$

where the definitions for the remaining variables are as shown in Equation (86).

$$\tilde{s}_5 = s_{5I} + js_{7Q};\quad \tilde{s}_6 = s_{6I} + js_{8Q};\quad \tilde{s}_7 = s_{7I} + js_{5Q};\quad \tilde{s}_8 = s_{8I} + js_{6Q} \tag{86}$$

The Matrix C is used for spatial multiplexing and is shown in Equation (87).

$$C = \begin{bmatrix} S_1 \\ S_2 \\ S_3 \end{bmatrix} \tag{87}$$

The index, k, of the permuted version of Matrix A and Matrix B to use for a particular deployment is given by: k = mod(floor((*logical_data_subcarrier_number_for_first_tone_of_code* – 1)/2) , 3) + 1, where *logical_data_subcarrier_number_for_first_tone_of_code* = 1, 2, 3, …, Total # of data subcarriers.

8.4.8.3.4.1 Enhanced 3-Tx Matrix A with Antenna Grouping

For 3-Tx antenna BS, transmission Matrix A in 8.4.8.3.4 may be employed with adaptive antenna grouping, which is fed back from MS.

When MS reports 0b000, 0b0111 or 0b101110 on its CQICH (see 8.4.11.3 and 8.4.11.7), then BS shall group antenna 0 and 1 for the first subcarrier and antenna 1 and 2 for the second subcarrier. In matrix form, it shall be read as shown in Equation (88).

$$A_1 = \begin{bmatrix} \tilde{s}_1 & -\tilde{s}_2^* & 0 & 0 \\ \tilde{s}_2 & \tilde{s}_1^* & \tilde{s}_3 & -\tilde{s}_4^* \\ 0 & 0 & \tilde{s}_4 & \tilde{s}_3^* \end{bmatrix} \tag{88}$$

When MS reports 0b001, 0b1000 or 0b101111 on its CQICH, then BS shall group antenna 0 and 1 for the first subcarrier and antenna 0 and 2 for the second subcarrier. In matrix form, it shall be read as shown in Equation (89).

$$A_2 = \begin{bmatrix} \tilde{s}_1 & -\tilde{s}_2^* & \tilde{s}_3 & -\tilde{s}_4^* \\ \tilde{s}_2 & \tilde{s}_1^* & 0 & 0 \\ 0 & 0 & \tilde{s}_4 & \tilde{s}_3^* \end{bmatrix} \tag{89}$$

When MS reports 0b010, 0b1001 or 0b110000 on its CQICH, then BS shall group antenna 0 and 2 for the first subcarrier and antenna 1 and 2 for the second subcarrier. In matrix form, it shall be read as shown in Equation (90).

$$A_3 = \begin{bmatrix} \tilde{s}_1 & -\tilde{s}_2^* & 0 & 0 \\ 0 & 0 & \tilde{s}_3 & -\tilde{s}_4^* \\ \tilde{s}_2 & \tilde{s}_1^* & \tilde{s}_4 & \tilde{s}_s^* \end{bmatrix} \tag{90}$$

8.4.8.3.4.2 Enhanced 3-Tx Matrix B with antenna grouping

For 3-Tx antenna BS, transmission Matrix B for rate 2 may be employed with antenna grouping information that is fed back on a CQICH from MS.

When MS reports 0b000, 0b1010, or 0b110001 on its allocated CQICH, then BS shall transmit in the transmission matrix shown in Equation (91).

$$B_1 = \begin{bmatrix} \tilde{s}_7 & -\tilde{s}_8^* & \tilde{s}_3 & -\tilde{s}_4^* \\ \tilde{s}_1 & -\tilde{s}_2^* & \tilde{s}_5 & -\tilde{s}_6^* \\ \tilde{s}_2 & \tilde{s}_1^* & \tilde{s}_6 & \tilde{s}_5^* \end{bmatrix} \tag{91}$$

When MS reports 0b001, 0b1011, or b110010 on its allocated CQICH, then BS shall transmit in the transmission matrix shown in Equation (92).

$$B_2 = \begin{bmatrix} \tilde{s}_1 & -\tilde{s}_2^* & \tilde{s}_5 & -\tilde{s}_6^* \\ \tilde{s}_7 & -\tilde{s}_8^* & \tilde{s}_3 & -\tilde{s}_4^* \\ \tilde{s}_2 & \tilde{s}_1^* & \tilde{s}_6 & \tilde{s}_5^* \end{bmatrix} \tag{92}$$

When MS reports 0b010, 0b1100, or 0b110011 on its allocated CQICH, then BS shall transmit in the transmission matrix shown in Equation (93).

$$B_3 = \begin{bmatrix} \tilde{s}_1 & -\tilde{s}_2^* & \tilde{s}_5 & -\tilde{s}_6^* \\ \tilde{s}_2 & \tilde{s}_1^* & \tilde{s}_6 & \tilde{s}_5^* \\ \tilde{s}_7 & -\tilde{s}_8^* & \tilde{s}_3 & -\tilde{s}_4^* \end{bmatrix} \tag{93}$$

8.4.8.3.4.3 3-Tx Matrix C with antenna selection

For the transmission Matrix C, when k substreams are configured, $x_i = [s_1,s_2,..s_k]$, $k = 1, \ldots, M$, $M = 1,2$ Transmission matrix is adaptively changed according to the CQICH. For 3-Tx antennas BS, the transmission matrix is listed in Table 474, where the mapping of the Matrix C_n to the CQICH is shown. The active antenna is power boosted.

Table 474—Enhanced 3-Tx Matrix C with antenna grouping

Streams, k	CQICH (binary)			Power boosting
	0b110000 (option 1)	0b110001 (option 2)	0b110010 (option 3)	

Table 474—Enhanced 3-Tx Matrix C with antenna grouping *(continued)*

1	$C_1 = c\begin{bmatrix} s_1 \\ 0 \\ 0 \end{bmatrix}$	$C_2 = c\begin{bmatrix} 0 \\ s_1 \\ 0 \end{bmatrix}$	$C_3 = c\begin{bmatrix} 0 \\ 0 \\ s_1 \end{bmatrix}$	$c = 1$
2	$C_1 = c\begin{bmatrix} s_1 \\ s_2 \\ 0 \end{bmatrix}$	$C_2 = c\begin{bmatrix} s_1 \\ 0 \\ s_2 \end{bmatrix}$	$C_3 = c\begin{bmatrix} 0 \\ s_1 \\ s_2 \end{bmatrix}$	$c = 1/(\sqrt{2})$

Stream $k = 2$ indicates TLV = 176, with Bit 1 and Bit 16 set.

8.4.8.3.5 Transmission schemes for 4-antenna BS

For all permutation zones using 4-antenna BS, one of the three transmission matrices in Equation (94), Equation (95), or Equation (96) shall be used:

$$A = \begin{bmatrix} s_1 & -s_2^* & 0 & 0 \\ s_2 & s_1^* & 0 & 0 \\ 0 & 0 & s_3 & -s_4^* \\ 0 & 0 & s_4 & s_3^* \end{bmatrix} \tag{94}$$

$$B = \begin{bmatrix} s_1 & -s_2^* & s_5 & -s_7^* \\ s_2 & s_1^* & s_6 & -s_8^* \\ s_3 & -s_4^* & s_7 & s_5^* \\ s_4 & s_3^* & s_8 & s_6^* \end{bmatrix} \tag{95}$$

$$C = \begin{bmatrix} s_1 \\ s_2 \\ s_3 \\ s_4 \end{bmatrix} \tag{96}$$

where s_i may have different rates.

The permuted matrix-A (over two OFDMA symbols and two subcarriers where the first two columns refer to the first subcarrier over two OFDMA symbols and the last two columns refer to the second subcarrier over two OFDMA symbols) for 4Tx-Rate 1 is given in three permuted matrices as shown in Equation (97).

$$A_1 = \begin{bmatrix} S_1 & -S^*_2 & 0 & 0 \\ S_2 & S^*_1 & 0 & 0 \\ 0 & 0 & S_3 & -S^*_4 \\ 0 & 0 & S_4 & S^*_3 \end{bmatrix}, \quad A_2 = \begin{bmatrix} S_1 & -S^*_2 & 0 & 0 \\ 0 & 0 & S_3 & -S^*_4 \\ S_2 & S^*_1 & 0 & 0 \\ 0 & 0 & S_4 & S^*_3 \end{bmatrix}, \quad A_3 = \begin{bmatrix} S_1 & -S^*_2 & 0 & 0 \\ 0 & 0 & S_3 & -S^*_4 \\ 0 & 0 & S_4 & S^*_3 \\ S_2 & S^*_1 & 0 & 0 \end{bmatrix}. \tag{97}$$

The mapping of subscript k to determine the Matrix A_k is given by the following formula:

k = mod(floor((*logical_data_subcarrier_number_for_first_tone_of_code* – 1)/2) , 3) + 1

where

logical_data_subcarrier_number_for_first_tone_of_code = 1,2,3,…,Total # of data subcarriers.

The permuted matrix-B (over two OFDMA symbols and two subcarriers where the first two columns refer to the first subcarrier over two OFDMA symbols and the last two columns refer to the second subcarrier over two OFDMA symbols) for 4-Tx-Rate 2 is given in six permuted matrices as shown in Equation (98).

$$B_1 = \begin{bmatrix} S_1 & -S^*_2 & S_5 & -S^*_7 \\ S_2 & S^*_1 & S_6 & -S^*_8 \\ S_3 & -S^*_4 & S_7 & S^*_5 \\ S_4 & S^*_3 & S_8 & S^*_6 \end{bmatrix}, \quad B_2 = \begin{bmatrix} S_1 & -S^*_2 & S_5 & -S^*_7 \\ S_2 & S^*_1 & S_6 & -S^*_8 \\ S_4 & S^*_3 & S_8 & S^*_6 \\ S_3 & -S^*_4 & S_7 & S^*_5 \end{bmatrix}, \quad B_3 = \begin{bmatrix} S_1 & -S^*_2 & S_5 & -S^*_7 \\ S_3 & -S^*_4 & S_7 & S^*_5 \\ S_2 & S^*_1 & S_6 & -S^*_8 \\ S_4 & S^*_3 & S_8 & S^*_6 \end{bmatrix}.$$

$$B_4 = \begin{bmatrix} S_1 & -S^*_2 & S_5 & -S^*_7 \\ S_4 & S^*_3 & S_8 & S^*_6 \\ S_2 & S^*_1 & S_6 & -S^*_8 \\ S_3 & -S^*_4 & S_7 & S^*_5 \end{bmatrix}, \quad B_5 = \begin{bmatrix} S_1 & -S^*_2 & S_5 & -S^*_7 \\ S_3 & -S^*_4 & S_7 & S^*_5 \\ S_4 & S^*_3 & S_8 & S^*_6 \\ S_2 & S^*_1 & S_6 & -S^*_8 \end{bmatrix}, \quad B_6 = \begin{bmatrix} S_1 & -S^*_2 & S_5 & -S^*_7 \\ S_4 & S^*_3 & S_8 & S^*_6 \\ S_3 & -S^*_4 & S_7 & S^*_5 \\ S_2 & S^*_1 & S_6 & -S^*_8 \end{bmatrix}. \tag{98}$$

The mapping of subscript k to determine the Matrix B_k is given by the following formula:

k = mod(floor((*logical_data_subcarrier_number_for_first_tone_of_code* – 1)/2) , 6) + 1

where

logical_data_subcarrier_number_for_first_tone_of_code = 1,2,3,…,Total # of data subcarriers.

8.4.8.3.5.1 Enhanced 4-Tx Matrix A with antenna grouping

For 4-Tx antenna BS, transmission Matrix A in 8.4.8.3.5 may be employed with adaptive antenna grouping, which is fed back from MS.

When MS reports 0b101110 on its CQICH, then BS shall group antenna 0 and 1 for the first subcarrier and antenna 2 and 3 for the second subcarrier. In matrix form, it shall be read as shown in Equation (99).

$$A_1 = \begin{bmatrix} s_1 & -s_2^* & 0 & 0 \\ s_2 & s_1^* & 0 & 0 \\ 0 & 0 & s_3 & -s_4^* \\ 0 & 0 & s_4 & s_3^* \end{bmatrix} \tag{99}$$

When MS reports 0b101111 on its CQICH, then BS shall group antenna 0 and 2 for the first subcarrier and antenna 1 and 3 for the second subcarrier. In matrix form, it shall be read as shown in Equation (100).

$$A_2 = \begin{bmatrix} s_1 & -s_2^* & 0 & 0 \\ 0 & 0 & s_3 & -s_4^* \\ s_2 & s_1^* & 0 & 0 \\ 0 & 0 & s_4 & s_3^* \end{bmatrix} \tag{100}$$

When MS reports 0b110000 on its CQICH, then BS shall group antenna 0 and 3 for the first subcarrier and antenna 1 and 2 for the second subcarrier. In matrix form, it shall be read as shown in Equation (101).

$$A_3 = \begin{bmatrix} s_1 & -s_2^* & 0 & 0 \\ 0 & 0 & s_3 & -s_4^* \\ 0 & 0 & s_4 & s_3^* \\ s_2 & s_1^* & 0 & 0 \end{bmatrix} \tag{101}$$

8.4.8.3.5.2 Enhanced 4-Tx Matrix B with antenna grouping

For 4-Tx antenna BS, transmission Matrix B for rate 2 may be employed with antenna grouping information that is fed back on a CQICH from MS.

When MS reports 0b110001 on its allocated CQICH, then BS shall group antenna 0 and 1 for the first diversity pair and antenna 2 and 3 for the second diversity pair. In matrix form, it shall be read as shown in Equation (102).

$$B_1 = \begin{bmatrix} s_1 & -s_2^* & s_5 & -s_7^* \\ s_2 & s_1^* & s_7 & s_5^* \\ s_3 & -s_4^* & s_6 & -s_8^* \\ s_4 & s_3^* & s_8 & s_6^* \end{bmatrix} \tag{102}$$

When MS reports 0b110010 on its allocated CQICH, then BS shall transmit in the transmission matrix as shown in Equation (103).

$$B_2 = \begin{bmatrix} s_1 & -s_2^* & s_5 & -s_7^* \\ s_2 & s_1^* & s_7 & s_5^* \\ s_4 & s_3^* & s_8 & s_6^* \\ s_3 & -s_4^* & s_6 & -s_8^* \end{bmatrix} \tag{103}$$

When MS reports 0b110011 on its allocated CQICH, then BS shall group antenna 0 and 2 for the first diversity pair and antenna 1 and 3 for the second diversity pair. In matrix form, it shall be read as shown in Equation (104).

$$B_3 = \begin{bmatrix} s_1 & -s_2^* & s_5 & -s_7^* \\ s_3 & -s_4^* & s_6 & -s_8^* \\ s_2 & s_1^* & s_7 & s_5^* \\ s_4 & s_3^* & s_8 & s_6^* \end{bmatrix} \tag{104}$$

When MS reports 0b110100 on its allocated CQICH, then BS shall transmit in the transmission matrix as shown in Equation (105).

$$B_4 = \begin{bmatrix} s_1 & -s_2^* & s_5 & -s_7^* \\ s_4 & s_3^* & s_8 & s_6^* \\ s_2 & s_1^* & s_7 & s_5^* \\ s_3 & -s_4^* & s_6 & -s_8^* \end{bmatrix} \tag{105}$$

When MS reports 0b110101 on its allocated CQICH, then BS shall group antenna 0 and 3 for the first diversity pair and antenna 1 and 2 for the second diversity pair. In matrix form, it shall be read as shown in Equation (106).

$$B_5 = \begin{bmatrix} s_1 & -s_2^* & s_5 & -s_7^* \\ s_3 & -s_4^* & s_6 & -s_8^* \\ s_4 & s_3^* & s_8 & s_6^* \\ s_2 & s_1^* & s_7 & s_5^* \end{bmatrix} \tag{106}$$

When MS reports 0b110110 on its allocated CQICH, then BS shall transmit in the transmission matrix as shown in Equation (107).

$$B_6 = \begin{bmatrix} s_1 & -s_2^* & s_5 & -s_7^* \\ s_4 & s_3^* & s_8 & s_6^* \\ s_3 & -s_4^* & s_6 & -s_8^* \\ s_2 & s_1^* & s_7 & s_5^* \end{bmatrix} \tag{107}$$

8.4.8.3.5.3 4-Tx Matrix C with antenna selection

For 4-Tx antennas BS, the transmission matrix is listed in Table 475, where the mapping of the Matrix C_n to the CQICH is shown. The active antenna is power boosted.

Table 475—Mapping of precoding matrix and CQICH for 4-Tx Matrix C with antenna selection

Streams, k	CQICH (binary)						Power boosting
	0b110000 (option 1)	0b110001 (option 2)	0b110010 (option 3)	0b110011 (option 4)	0b110100 (option 5)	0b110101 (option 6)	
1	$C_1 = c\begin{bmatrix} s_1 \\ 0 \\ 0 \\ 0 \end{bmatrix}$	$C_2 = c\begin{bmatrix} 0 \\ s_1 \\ 0 \\ 0 \end{bmatrix}$	$C_3 = c\begin{bmatrix} 0 \\ 0 \\ s_1 \\ 0 \end{bmatrix}$	$C_4 = c\begin{bmatrix} 0 \\ 0 \\ 0 \\ s_1 \end{bmatrix}$			$c = 1$
2	$C_1 = c\begin{bmatrix} s_1 \\ s_2 \\ 0 \\ 0 \end{bmatrix}$	$C_2 = c\begin{bmatrix} s_1 \\ 0 \\ s_2 \\ 0 \end{bmatrix}$	$C_3 = c\begin{bmatrix} s_1 \\ 0 \\ 0 \\ s_2 \end{bmatrix}$	$C_4 = c\begin{bmatrix} 0 \\ s_1 \\ s_2 \\ 0 \end{bmatrix}$	$C_5 = c\begin{bmatrix} 0 \\ s_1 \\ 0 \\ s_2 \end{bmatrix}$	$C_6 = c\begin{bmatrix} 0 \\ 0 \\ s_1 \\ s_2 \end{bmatrix}$	$c = \frac{1}{\sqrt{2}}$
3	$C_1 = c\begin{bmatrix} s_1 \\ s_2 \\ s_3 \\ 0 \end{bmatrix}$	$C_2 = c\begin{bmatrix} s_1 \\ s_2 \\ 0 \\ s_3 \end{bmatrix}$	$C_3 = c\begin{bmatrix} s_1 \\ 0 \\ s_2 \\ s_3 \end{bmatrix}$	$C_4 = c\begin{bmatrix} 0 \\ s_1 \\ s_2 \\ s_3 \end{bmatrix}$			$c = \frac{1}{\sqrt{3}}$

Stream $k = 2$ indicates TLV = 176, with Bit 1 and Bit 16 set.

Stream $k = 3$ indicates TLV = 176, with Bit 11 and Bit 16 set.

8.4.8.3.6 MIMO precoding

The space time coding output can be weighted by a matrix before mapping onto Tx antennas:

$$z = Wx$$

where x is a $M_t \times 1$ vector with the output from the space-time coding (per-subcarrier), M_t is the number of streams at the output of the space-time coding scheme. The matrix W is an $N_t \times M_t$ weighting matrix where the quantity N_t is the number of actual Tx antennas. The vector z contains the signals after weighting for the different actual antennas. The labeling of the elements in the weighting matrix W is performed in accordance with the example of W given in Equation (108) for the case of four actual antennas and two space-time coding output streams. the number of actual Tx antennas (N_t) is equal to the number of antennas used for the

midamble. If the midamble is not present, N_t is equal to the number of antennas specified by the STC zone IE.

$$W = \begin{bmatrix} W_{11} & W_{12} \\ W_{21} & W_{22} \\ W_{31} & W_{32} \\ W_{41} & W_{42} \end{bmatrix} \tag{108}$$

a) *Short-term closed-loop precoding.* When $M_t = 1$, then single stream precoding or beamforming shall be applied with the vector W of dimension $N_t \times 1$. The transmission scheme before the precoder is the regular single antenna transmission. When $M_t = 2$, 3 or 4, then the two, three, or four STC output streams shall be transmitted with a precoding matrix of dimension $N_t \times 2$, $N_t \times 3$, $N_t \times 4$.

   When using CQICH feedback type 0b100 (Index to precoding matrix in codebook) in Table 396, the number of bits in the precoding matrix index in the codebook is determined by the number of bits in the CQICH Type (also in Table 396).

b) *Long-term closed-loop precoding.* The rank of the precoding matrix is indicated in the long-term precoding feedback from the SS. The number of columns in the precoding matrix equals its rank. The STC scheme used, Matrix A, B or C, is selected from the set of STC schemes associated with the number of Tx antennas equaling the rank of the long-term precoding matrix used. For example, if the rank of the long-term precoding matrix is 2 and the spatial rate used is 1 then the Matrix A scheme for 2 Tx antennas is used.

   When the long-term closed-loop precoding is turned on, the life span of short-term precoding information, the rank of the long-term precoding codebook used and the index to the precoding matrix in the specified long-term precoding codebook is fed back with MAC header feedback messages 0b0000 and 0b0001. If a short-term precoding matrix is available, the BS shall use this short-term matrix. If not, the BS shall use the fed back long-term precoding matrix, if available.

   The long-term closed-loop precoding uses the 6-bit codebook as specified in 8.4.11.12.

c) *Feeding back multiple precoder for band AMC operation.* For band AMC the BS may request a common precoding matrix for all bands or request a programmable number, N (see Table 17 and Table 396), precoding matrices to be fed back for the N best bands. In the latter case, the precoding matrices are fed back from the lowest AMC band index to the highest index. If a common precoder for all AMC bands is requested it is signaled in the CQICH channels. For the case where the dedicated pilot bit is set to 1 in the STC Zone IE (8.4.5.3.4) for the zone in which the subburst allocations are made, if the BS requests a common precoding matrix for all bands, a single precoding matrix shall be fed back based on the allocated bands. If the BS requests a programmable number N (see Table 17 and Table 396) of precoding matrices to be fed back for the N bands, they are signaled in the order described previously, over the corresponding CQICH channels or feedback header type 1101.

d) *Precoding state feed forward and precoding application delay.* If the precoding state is not fed forward in the DL burst allocation IE, then the BS shall apply precoding according to the precoding feedback from the SS (antenna grouping, antenna selection or codebook based) with a predetermined number of frames delay.

8.4.8.4 STC for the optional zones in the UL

Two optional zones in the UL, the optional PUSC and the optional AMC zones, are described in 8.4.6.2.5 and 8.4.6.3, respectively. STC may be used to improve system performance for these zones. Furthermore, two single Tx antenna MSs can perform collaborative spatial multiplexing onto the same subcarrier.

Table 476—Feedback for long-term precoding in MAC feedback header message

MAC header feedback type bit indication (binary)	Feedback element	Number of bits	Description
01000	Feedback of index to long-term precoding matrix in codebook	6	Index to long-term precoding matrix element in codebook
01000	Rank of precoding codebook	2	k, Rank of precoding codebook = $k + 1$
01000	FEC and QAM feedback	6	FEC and QAM specification

Table 477—Feedback for life span of short-term precoding in MAC feedback header message 0b01001

Bit field (N) (binary)	Life span in number of frames
0000–1111	$0.125 \times 2^{(N+1)}$

8.4.8.4.1 Allocation of pilot subcarriers

For 2-antenna MS and the optional PUSC, pilots for each antenna shall be allocated as shown in Figure 279.

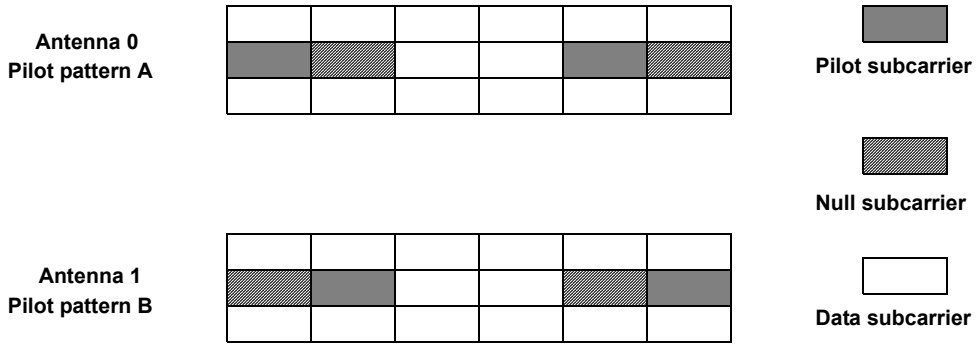

Figure 279—UL pilot allocation for 2-antenna MS for the optional PUSC zones

For 2-antenna MS and the optional AMC, pilot allocation pattern shall be identical to that for the DL optional AMC with 2 antennas described in 8.4.8.3.1.1; all pilots marked as antenna #0 shall be allocated for antenna 0 or pilot A, while pilots marked as antenna 1 shall be allocated for antenna #1 or pattern B. This is shown in Figure 272.

Two single Tx antenna MSs can perform collaborative spatial multiplexing onto the same subcarrier. In this case, one MS should use UL pilot allocation with pilot pattern A, and the other MS should use the UL pilot allocation with pilot pattern B.

When two dual Tx antenna MSs perform collaborative spatial multiplexing on the same subchannel, one MS shall use the pilot pattern A, B and the other SS shall use the pilot pattern C, D. Pilot patterns are illustrated

in Figure 280. Note that pilot polarity for each pattern is given in brackets, and the first pilot pattern shall be transmitted by one antenna, and the second pilot pattern transmitted by the other antenna.

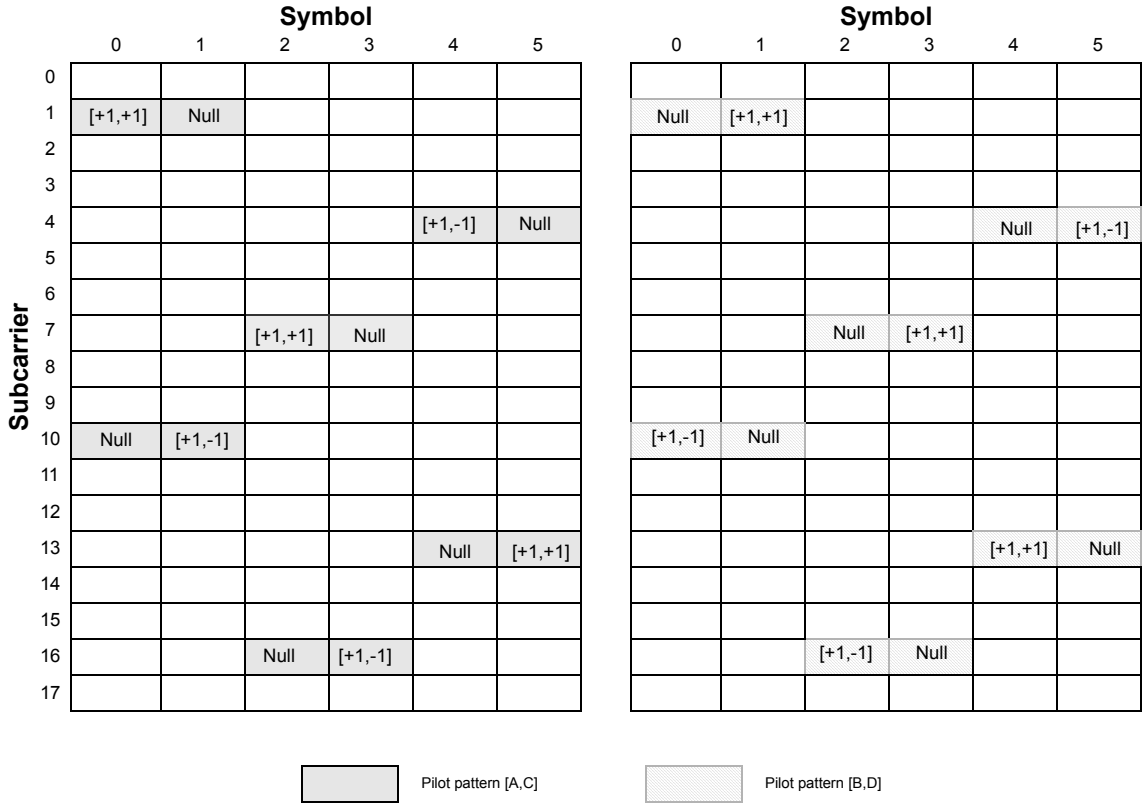

Figure 280—Uplink pilot allocation for 2 dual antenna MSs performing collaborative spatial multiplexing

8.4.8.4.2 Allocation of data subchannels

For the optional PUSC permutation with Matrix A in 8.4.8.4.3, the data subchannels shall be allocated for two consecutive slots in time. As can be seen in Figure 281, STC encoded data symbols shall be time mapped over two OFDMA symbols. The mapping starts at the lowest numbered subcarriers of lowest slot and continues in an ascending manner in subchannels first and then proceeds to the next two symbols in time.

When collaborative spatial multiplexing is performed by two MSs with dual Tx antennas, the data mapping rule shall be identical to the data mapping rule in Matrix A.

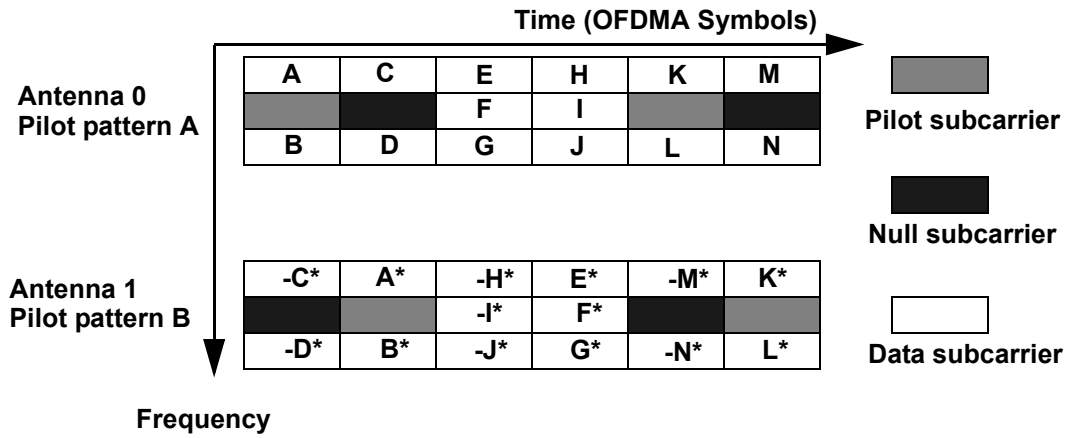

Figure 281—Uplink data mapping for 2-antenna SS with Matrix A for the optional PUSC permutation

For 2-antenna Matrix B in the optional PUSC permutation, modulated data symbols shall be sequentially mapped for two Tx antennas along the subcarriers in the symbol. The mapping continues in an ascending manner in subchannels first and then proceeds to the next symbol in time.

For the UL optional AMC permutation with Matrix A and B, the subcarrier permutation represented by Equation (75) 8.4.6.3 shall not be applied for the UL optional AMC permutation with Matrix A and B. The data mapping rule is identical to that for the DL AMC permutation with two antennas. For the UL optional AMC permutation with collaborative spatial multiplexing, the data mapping rule shall be identical to the mapping in single antenna transmission and the minimum allocation shall be six symbols.

8.4.8.4.3 Transmission schemes for 2-antenna MS in UL

The following matrices define the transmission format with the row index indicating antenna number and column index indicating OFDMA symbol time. For both UL permutation zones with 2-antenna MS, one of the following two transmission matrices shall be used:

$$A = \begin{bmatrix} S_i & -S^*_{i+1} \\ S_{i+1} & S^*_i \end{bmatrix}$$

$$B = \begin{bmatrix} S_i \\ S_{i+1} \end{bmatrix}$$

where S_i and S_{i+1} may be encoded in different rates.

The Matrix B may also be used for two single antenna MSs to share the same subchannel (collaborative spatial multiplexing).

8.4.8.5 MIMO midamble

The MIMO midamble consists of one OFDM symbol that is mapped onto multiple antennas. nonoverlapping subcarriers are allotted to the Tx antennas.

The index of the subcarrier starts from the first one after the left guard band. DC subcarrier is also included in the numbering but nulled prior to transmission. The midamble carrier-set is defined using the following formula:

$$\text{Midamble\_Carrier\_Set} = -(N_{used}-1)/2 + n + 2k\left\lceil \frac{N_t}{2} \right\rceil$$

where

N_t is the number of Tx antennas (2, 3, or 4)
n is the antenna index (0, 1,…, N_t–*1;* $N_t \leq 4$)
k is the subcarrier running index

For FUSC, optional FUSC, PUSC and adjacent subcarrier permutation, the antenna to subcarrier mapping is shown in Figure 282 for the case when $N_t = 4$. The midamble sequence has a mapping to midamble IDcell which is identical to the preamble index.

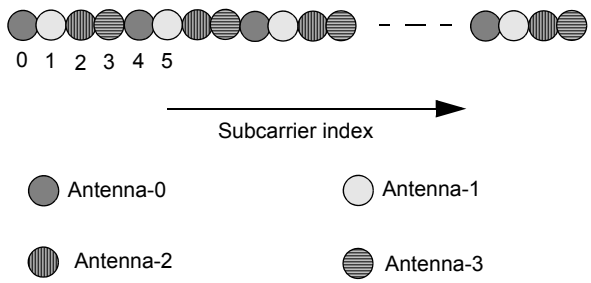

Figure 282—Midamble structure (frequency domain)

8.4.8.5.1 Midamble sequence

The subcarrier locations and corresponding PN code BPSK modulation of subcarriers in a midamble are defined as in Equation (109) and Equation (110). The DC subcarrier is also included in the numbering but nulled prior to transmission.

$$P_{ID_{cell},s}[k_{foi}] = \begin{cases} 1\text{-}(2)q_{ID_{cell}}[m], & k_{foi} = 2m\left\lceil \frac{N_t}{2} \right\rceil - \frac{N_{used}-1}{2} + n, \text{ and } m = 0, 1, \ldots, m_{MAX}, \text{ and } k_{foi} < \frac{N_{used}-1}{2} \\ 0, & otherwise \end{cases} \quad (109)$$

$$q_{ID_{cell}}[m] = \begin{cases} R\left(8\left\lfloor \frac{m}{9} \right\rfloor + m \bmod 9\right), & m \bmod 9 = 0, 1, 2, \ldots, 7 \\ T\left(\left\lfloor \frac{m}{9} \right\rfloor\right), & m \bmod 9 = 8 \end{cases} \quad \text{where } m = 0, 1, \ldots, m_{MAX} \quad (110)$$

where

N_t is the number of Tx antennas (2, 3, or 4)
n is the antenna index (0, 1,…, N_t*-1;* $N_t \leq 4$)

k is the subcarrier running index

$$m_{MAX} = \left\lfloor \frac{N_{used} - 1}{2\left\lceil \frac{N_t}{2} \right\rceil} \right\rfloor$$

The sequence *R(r)* in Equation (110) is either one of the formulas in Equation (111) or Equation (112), depending on N_{FFT} and N_T. The choice of the sequence *R(r)* and the length of sequence N_r supporting the choice are shown in Table 478.

$$R_1(r) = H_{128}\left(ID_{cell} + 1, \Pi_{\left\lfloor \frac{r}{128} \right\rfloor}(r \bmod 128)\right); r = 8\left\lfloor \frac{m}{9} \right\rfloor + m \bmod 9 = 0, 1, \ldots, N_r\text{-}1 \quad (111)$$

$$R_2(r) = B_{ID_{cell}+1} g_{\Pi(r)}; r = 8\left\lfloor \frac{m}{9} \right\rfloor + m \bmod 9 = 0, 1, \ldots, N_r\text{-}1 \quad (112)$$

Table 478—N_r [The length of sequence *R(r)*]

N_T	2				3 or 4			
N_{FFT}	2048	1024	512	128	2048	1024	512	128
$R_1(r)$	768	384	192	—	384	192	—	—
$R_2(r)$	—	—	—	48	—	—	96	24

In $R_1(r)$, $H_{128}(i, j)$ denotes the number at *(i, j)* of order 128 Walsh Hadamard matrix, where $i, j = 0, 1, \ldots, 127$. The first low vector of H_{128} is the all-one sequence and shall not be used. $\Pi_{\left\lfloor \frac{m}{128} \right\rfloor}(l); l = 0, 1, \ldots, 127$ is the l-th value of the $\left\lfloor \frac{m}{128} \right\rfloor^{th}$ permutation out of six predefined permutations shown in Table 479.

In *R2(r)*, if the k, $1 \le k \le 127$ can be converted into binary as $b_6b_5b_4b_3b_2b_1b_0$, define b_6 as the MSB, b_0 as the LSB, B_k is a (1×7) row vector to represent $B_k = [b_0b_1b_2b_3b_4b_5b_6]$. The $g_u; 0 \le u \le N_r - 1$ is u^{th} column vector of the generator matrix G. $B_k g_u$ is a product of (1×7) row vector and (7×1) column vector. The generator matrix G and the permutation $\Pi(l); l = 0, 1, 2, \ldots, N_r - 1$ for each N_{FFT} and N_T are shown in 8.4.8.5.1.1 and 8.4.8.5.1.2.

The sequence *T(k)* is determined by IDcell and should be chosen to achieve low PAPR.

8.4.8.5.1.1 PAPR reduction sequence for BS with two antennas

The PAPR reduction sequences for BS with two antennas are listed in Table 480, Table 481, Table 482, and Table 484 for the cases of 2048-FFT, 1024-FFT, and 512-FFT, and 128-FFT, respectively. Table 483 specifies the permutations.

Table 479—Permutation (l = 0, 1, 2, …, 127)

$\Pi_0(l)$	1, 65, 97, 113, 121, 125, 127, 126, 63, 94, 47, 86, 43, 84, 42, 21, 75, 100, 50, 25, 77, 103, 114, 57, 93, 111, 118, 59, 92, 46, 23, 74, 37, 83, 104, 52, 26, 13, 71, 98, 49, 89, 109, 119, 122, 61, 95, 110, 55, 90, 45, 87, 106, 53, 91, 108, 54, 27, 76, 38, 19, 72, 36, 18, 9, 69, 99, 112, 56, 28, 14, 7, 66, 33, 81, 105, 117, 123, 124, 62, 31, 78, 39, 82, 41, 85, 107, 116, 58, 29, 79, 102, 51, 88, 44, 22, 11, 68, 34, 17, 73, 101, 115, 120, 60, 30, 15, 70, 35, 80, 40, 20, 10, 5, 67, 96, 48, 24, 12, 6, 3, 64, 32, 16, 8, 4, 2, 0
$\Pi_1(l)$	25, 77, 103, 114, 57, 93, 111, 118, 59, 92, 46, 23, 74, 37, 83, 104, 52, 26, 13, 71, 98, 49, 89, 109, 119, 122, 61, 95, 110, 55, 90, 45, 87, 106, 53, 91, 108, 54, 27, 76, 38, 19, 72, 36, 18, 9, 69, 99, 112, 56, 28, 14, 7, 66, 33, 81, 105, 117, 123, 124, 62, 31, 78, 39, 82, 41, 85, 107, 116, 58, 29, 79, 102, 51, 88, 44, 22, 11, 68, 34, 17, 73, 101, 115, 120, 60, 30, 15, 70, 35, 80, 40, 20, 10, 5, 67, 96, 48, 24, 12, 6, 3, 64, 32, 16, 8, 4, 2, 1, 65, 97, 113, 121, 125, 127, 126, 63, 94, 47, 86, 43, 84, 42, 21, 75, 100, 50, 0
$\Pi_2(l)$	71, 98, 49, 89, 109, 119, 122, 61, 95, 110, 55, 90, 45, 87, 106, 53, 91, 108, 54, 27, 76, 38, 19, 72, 36, 18, 9, 69, 99, 112, 56, 28, 14, 7, 66, 33, 81, 105, 117, 123, 124, 62, 31, 78, 39, 82, 41, 85, 107, 116, 58, 29, 79, 102, 51, 88, 44, 22, 11, 68, 34, 17, 73, 101, 115, 120, 60, 30, 15, 70, 35, 80, 40, 20, 10, 5, 67, 96, 48, 24, 12, 6, 3, 64, 32, 16, 8, 4, 2, 1, 65, 97, 113, 121, 125, 127, 126, 63, 94, 47, 86, 43, 84, 42, 21, 75, 100, 50, 25, 77, 103, 114, 57, 93, 111, 118, 59, 92, 46, 23, 74, 37, 83, 104, 52, 26, 13, 0
$\Pi_3(l)$	69, 99, 112, 56, 28, 14, 7, 66, 33, 81, 105, 117, 123, 124, 62, 31, 78, 39, 82, 41, 85, 107, 116, 58, 29, 79, 102, 51, 88, 44, 22, 11, 68, 34, 17, 73, 101, 115, 120, 60, 30, 15, 70, 35, 80, 40, 20, 10, 5, 67, 96, 48, 24, 12, 6, 3, 64, 32, 16, 8, 4, 2, 1, 65, 97, 113, 121, 125, 127, 126, 63, 94, 47, 86, 43, 84, 42, 21, 75, 100, 50, 25, 77, 103, 114, 57, 93, 111, 118, 59, 92, 46, 23, 74, 37, 83, 104, 52, 26, 13, 71, 98, 49, 89, 109, 119, 122, 61, 95, 110, 55, 90, 45, 87, 106, 53, 91, 108, 54, 27, 76, 38, 19, 72, 36, 18, 9, 0
$\Pi_4(l)$	102, 51, 88, 44, 22, 11, 68, 34, 17, 73, 101, 115, 120, 60, 30, 15, 70, 35, 80, 40, 20, 10, 5, 67, 96, 48, 24, 12, 6, 3, 64, 32, 16, 8, 4, 2, 1, 65, 97, 113, 121, 125, 127, 126, 63, 94, 47, 86, 43, 84, 42, 21, 75, 100, 50, 25, 77, 103, 114, 57, 93, 111, 118, 59, 92, 46, 23, 74, 37, 83, 104, 52, 26, 13, 71, 98, 49, 89, 109, 119, 122, 61, 95, 110, 55, 90, 45, 87, 106, 53, 91, 108, 54, 27, 76, 38, 19, 72, 36, 18, 9, 69, 99, 112, 56, 28, 14, 7, 66, 33, 81, 105, 117, 123, 124, 62, 31, 78, 39, 82, 41, 85, 107, 116, 58, 29, 79, 0
$\Pi_5(l)$	70, 35, 80, 40, 20, 10, 5, 67, 96, 48, 24, 12, 6, 3, 64, 32, 16, 8, 4, 2, 1, 65, 97, 113, 121, 125, 127, 126, 63, 94, 47, 86, 43, 84, 42, 21, 75, 100, 50, 25, 77, 103, 114, 57, 93, 111, 118, 59, 92, 46, 23, 74, 37, 83, 104, 52, 26, 13, 71, 98, 49, 89, 109, 119, 122, 61, 95, 110, 55, 90, 45, 87, 106, 53, 91, 108, 54, 27, 76, 38, 19, 72, 36, 18, 9, 69, 99, 112, 56, 28, 14, 7, 66, 33, 81, 105, 117, 123, 124, 62, 31, 78, 39, 82, 41, 85, 107, 116, 58, 29, 79, 102, 51, 88, 44, 22, 11, 68, 34, 17, 73, 101, 115, 120, 60, 30, 15, 0

Table 480—PAPR reduction sequence for BS with two antennas (2048-FFT)

ID cell	Sequence	PAPR	ID cell	Sequence	PAPR
0	E5F121DCFF4A0E63825399D3	5.92384	57	53F2BFC63878B6C2C10C8A2C	5.70754
1	D10BA3F1A15DDF9C4D819B45	6.28771	58	C20824E0B5348061E2A4C1CE	6.05831
2	13310AB0491064CE7516898C	5.88237	59	8F1B88288316B59939D490A9	6.002
3	E53C10EB0B1E830D7C2302A2	5.72241	60	3203E66C6406767186F8955A	6.79504
4	37DBDBACCEDC976D1DE87D53	6.54265	61	B335E583FD89A0A410876B81	6.17206
5	E43B8C8299E5B2B49798FA28	6.23106	62	C11D537E5E2992361F2CC44B	6.06154
6	52A78E348A46E8E84CF29D7B	6.96087	63	F1E074FEB2CF55427C573C6F	5.80776
7	CA6B366D37E54A7EDF32A688	6.23321	64	BC8C283A7CA014EC79837DD7	5.82436
8	3852A3F8B0E1E7FC41301F17	6.35304	65	DF29647F465044A0BC7D2720	6.28397
9	271E4591888CBCD44B32B809	5.88167	66	F29CCF3995F08458FA0F8908	5.89065

Table 480—PAPR reduction sequence for BS with two antennas (2048-FFT) ***(continued)***

ID cell	Sequence	PAPR	ID cell	Sequence	PAPR
10	1CB9181F0A47346785BC9464	6.5208	67	28F5D1FD67E98528DB28BB5D	6.08206
11	786E7023033922819D70233B	6.16551	68	DC5908BB6B8E1B84ADF881A8	6.01325
12	D7E0A495CFE8CEC3D2AF4B5D	5.99014	69	0AF44605329EE32ACF75481B	5.84218
13	360ECD45D330B876A8F13462	6.43524	70	C7CEF13FD6FE89346FB543B2	6.33524
14	C63BDDD2D536FF2416B7A424	6.01736	71	5D2B9D0E4306F96A65BAF4EB	6.34218
15	10A8B5DAB83CE78B3FCFC31D	6.19619	72	0E2D2473C890413D9A9D8DB1	6.05022
16	6152A33C894DC0B62EEA0DDA	6.13798	73	7C082A7E84B366733C6E19D1	5.9351
17	757A237D70ABD7AB1FFB04F0	5.95019	74	85C50A024C78CC1B3AEF4C94	5.84302
18	BC0D0BEA01E586B664401CFC	6.2348	75	298A3E89079EF4C27CC921A9	6.13354
19	8A5CD82D82B19593F8266E7E	5.67582	76	825D06F901CE94D8168D8A46	6.00828
20	F44201B0903E55006BDFD5B0	6.78315	77	73DCC20AFF8C5837F539EE22	6.27564
21	5F252E0EC94C7965A2B347F3	6.37986	78	553DD23CB093EFD7C544F013	5.88433
22	6E376986A947B180015A0A9A	6.24373	79	5EE648A514E40CF0E7ECE2A1	5.95859
23	3669CAF711FC2129743CFFBA	6.1472	80	F7B98C7D1DD5CE51B6B678A3	6.54896
24	C1D8E53D16322CB3B1386B0E	5.87095	81	9B840FF5F78473E2F75B8E2D	5.87521
25	9E1F780C45570E3A475F5A77	6.11801	82	8C99E9A614E8AC8C74566752	6.03187
26	32F36D066051FAE51512A8F3	6.27711	83	B7EC60A09ACD2CABB53DEDE9	5.95608
27	464AD0462512248F26313BC4	6.50894	84	2900FBF0CC91DA813CDBEAD0	5.87135
28	03F93CDFCA5B9D3262FD2D25	6.12574	85	949EF4015122026200DF05F1	6.11214
29	694CAFC989888FC1F358CA8F	5.86597	86	F3AE5B267C36BF3877E4AC49	5.87287
30	8C9F1D8E186EAFEDF0D6F4DD	6.17035	87	A4E43FBE54A0280D65419C99	6.0007
31	C4E95F3E65B40D938946B132	5.84552	88	F116946F21EF61D108AC2F42	6.94574
32	5891E3188FA53AE34576A803	5.85053	89	5B82DE3F0ADB20D788A045A6	6.13544
33	409FF8A9E7FCDA58D4A5241B	6.10709	90	AC639F8BDB63A8C4E4746E65	6.25857
34	3C70E4E442FA01B79EE09FA5	6.20979	91	70C588D838AB0FC61F8EABDA	5.85846
35	36817EE5B08B5B4B9CE88CBE	5.77008	92	D6A8AD537E8258E745C1C476	5.82355
36	BA78FAA5BDCC40837F5205DA	6.31919	93	8A4F652DF088D93FC0073FD8	6.00051
37	A490E570CE08172BD82A3633	5.73775	94	450F92DF140D63380103F31B	6.48422
38	8433E275E271D4EC11019463	5.78564	95	EAAF05F63641E7AFED3A5A79	5.90759
39	F83B07F42EFAE5F1EA281A78	5.68333	96	5F501203D217CF94BC44A6C1	6.5396
40	B9B93373373FFCB301EFCD77	5.79877	97	71F6C952D988BC8847E0BA88	6.09041
41	22B5A5AAC8B3756C6C4ADFE6	6.27794	98	BF472D6610532AE50CDF829A	6.28286

Table 480—PAPR reduction sequence for BS with two antennas (2048-FFT) ***(continued)***

ID cell	Sequence	PAPR	ID cell	Sequence	PAPR
42	C6DFADA3233FF4EE17DE5E17	5.87103	99	D15D9E8AECFE8C296D5802D6	6.22803
43	70D09DC4F9121828C70B6064	5.76809	100	D5AD5575149C76589FF8784A	6.07452
44	F01F5956C24E2156253809D8	6.64621	101	7868B4788F33D2EA66C86BE2	5.83685
45	8E157642C21545D6AFC4C9EE	5.77721	102	B722E30271A97725EA79020A	5.97044
46	391D93EF8012E5D2F8E2C299	6.87607	103	30209E7F80F14A76FCB45DBF	6.06914
47	EC1D207A7BA6C4852C105E34	6.09394	104	6FA8FDC42599BDFDCEEFD828	5.99957
48	55858594CBAC6A7760D72623	6.0547	105	9CAF25C12BA260391958223B	5.91873
49	FBB76DDCC08E8B0A89E8D35B	6.30027	106	CD82CBA6EA27C514AA8F40A0	5.72081
50	6394D6CFC5269D0B8DFCE4D6	5.71258	107	96852F4F3B879A23F97D3DFA	6.24847
51	F92EDE555781CC62F5C3FA42	6.26962	108	236F33011BD7E277C5BC9561	5.84184
52	E66B7E6E901C802D1725C31B	6.98039	109	9B74FD2CA98D58E7B8EDD5DB	6.1246
53	0BA101B2F3F78E672EFC0CC7	6.25099	110	2DC51FEED52392D7174435E8	5.80747
54	26E1EC3E787F6092D1634683	6.54994	111	8708EE1A78F79E3E14D30DD7	6.23013
55	4767A25488E79F75E2F45FA1	6.25162	112	FCCD639AD5BA5B1451CBD600	5.96117
56	1A2FC69DC4DCAD0399DAF857	6.06972	113	652492280DC624A59D2A3F82	6.32939

Table 481—PAPR reduction sequence for BS with two antennas (1024-FFT)

ID cell	Sequence	PAPR	ID cell	Sequence	PAPR	ID cell	Sequence	PAPR
0	C9A1F9FB33E2	5.73908	43	13CBBBDD1888	5.25927	86	6414C0DB128C	6.26365
1	C615462A8D6E	5.69178	44	34B0D91482A7	5.43386	87	08FEAB4846B9	5.5487
2	D8400C1E2B47	5.67259	45	0DB3ECE942B0	5.40054	88	7E160C4BA0F0	5.7677
3	DBCF1478431C	5.91286	46	A4D876BF7C4E	5.45618	89	5CCA9AF7C373	5.61368
4	CC93B30C0EB9	5.55863	47	7D492A0F5B39	6.40321	90	21B3DF421DE7	5.43398
5	C6F3D332B053	5.3082	48	C82DA6102B09	5.31582	91	9323DD2F2771	5.2348
6	9BA4E419EBB5	5.5186	49	F68C09C7D629	5.1445	92	A26015CF1514	5.78478
7	48FD85CD7E76	6.11686	50	4D6C3B62D026	6.44183	93	8220CF898D60	5.43634
8	E992B4493831	5.69693	51	EBD13D02E539	5.35096	94	8CCEC410F8A6	5.33904
9	4E1401A862B5	5.92235	52	760432EDBC5B	5.42816	95	4FFDECD6D0E0	5.50659
10	9D3239BF5543	5.50286	53	022040211B53	5.58372	96	42D052099826	5.68271
11	2B8584BFB3D8	5.19875	54	2663067DE01D	5.50621	97	8785DFDA586A	5.2863

Table 481—PAPR reduction sequence for BS with two antennas (1024-FFT) ***(continued)***

ID cell	Sequence	PAPR	ID cell	Sequence	PAPR	ID cell	Sequence	PAPR
12	AB42706F96A0	5.44334	55	C0776A8DD057	5.29609	98	68DDF31B930F	5.65759
13	9DB123495FB7	5.63328	56	96117C9722E1	5.61786	99	F0539BCDAACB	5.6598
14	A6EFBCB2865D	6.0094	57	204C31E521C4	5.27659	100	372C0613FE2C	5.21517
15	709300E57360	5.73209	58	C8C12F23551B	5.70925	101	37402B2A80A9	6.29655
16	6E2122FC796F	5.82368	59	1217E2F687C1	5.51497	102	523AE3212125	5.41681
17	7F01F8B4454F	5.47779	60	DBF86CB15B3B	5.57367	103	02EDF46F9694	5.47569
18	CDF8525E2FF7	5.33406	61	BCC4EC437886	5.94074	104	E64CC083190E	5.71759
19	0AC1FA2585A5	6.24242	62	AA2734F33EF9	5.71983	105	65DE3871D0D1	5.80455
20	46843DFB1135	5.65053	63	CBA739A84A4D	5.96463	106	7808E3E5FE8E	5.88159
21	8B411A6D7235	5.524	64	E12166CA6DF5	5.64715	107	070004E13E81	5.79589
22	096A3287FE74	5.65888	65	DE42128CD418	5.16399	108	1CE29934CF8D	5.33859
23	E26CD654FF1A	5.89291	66	F90F21A0B95F	5.52101	109	52B8A394BDBC	5.9872
24	D955EFF989FE	5.90035	67	DCC08885C1D0	5.34739	110	1A13C7DB3016	5.31546
25	882566402741	5.62867	68	152AFEFAA90D	5.34108	111	CE75430244B7	5.40294
26	9FCD0AB3FCF8	5.79711	69	CB30CE0D8CD2	5.89277	112	DD89BD52F023	5.81172
27	8E477A39DA36	5.45249	70	849C1C0DA6A3	5.64765	113	6B98276F9841	5.59191
28	83740061371F	5.42528	71	B8177804D737	5.78193			
29	179FBF270668	5.59438	72	693BE40CEE81	5.6998			
30	0B4738E24AE1	6.26907	73	632921AF950C	6.29239			
31	9BD23A217294	5.83321	74	C4D296ABB9B0	5.55821			
32	E783A99153C7	5.57411	75	08DCE8EE0E46	5.61434			
33	60690386D94B	5.56542	76	616A6B8637F3	5.29314			
34	EEB11CF6A279	5.61602	77	DB69C2C67E5F	5.67251			
35	17737FC0364B	5.46925	78	B7922C4D47E0	5.54227			
36	DBA832CB29FF	5.46318	79	5A4273474A62	5.41366			
37	841030AA2B58	5.66141	80	50082E465126	5.57391			
38	573AE8A1189A	6.49919	81	2E3844099ABD	5.27701			
39	26EF1E523190	5.45727	82	F8EFB7F0CE2F	5.76264			
40	45F27228B846	6.37869	83	64B7E857C964	5.89799			
41	D26C39A8D803	5.63232	84	5B4DDAF2A8D1	6.02566			
42	4514BB4432A6	5.74245	85	B639EE82C328	5.71509			

Table 482—PAPR reduction sequence for BS with two antennas (512-FFT)

ID cell	Sequence	PAPR	ID cell	Sequence	PAPR	ID cell	Sequence	PAPR
0	C88B5B	4.67601	43	F3D2C6	4.93286	85	B286FB	5.2203
1	4B943B	5.01945	44	0BFE87	5.03341	86	36016D	5.00459
2	26A2CA	4.9099	45	92AA64	4.93443	87	98D31F	4.85287
3	ABF43A	4.9298	46	A5D580	5.18021	88	6A87B3	4.80097
4	F653DD	5.58288	47	6D6DFD	4.94058	89	958B99	5.40979
5	686FDB	5.08845	48	6A578D	5.58274	90	8AB689	4.89558
6	0D2D4F	5.49959	49	967EE4	5.18235	91	570A5C	4.75712
7	E4BEB2	5.03402	50	CE4755	6.35302	92	47A9A6	5.42678
8	C68129	5.41883	51	2D6ECE	5.92368	93	4B2F30	5.47629
9	6C86BB	5.41345	52	6BA1CF	6.12984	94	0D6033	5.36666
10	0211D9	5.25745	53	019E02	6.09087	95	3F7DAA	4.73588
11	4A0178	4.60192	54	A06B8B	4.90168	96	E64518	5.68267
12	71E762	5.20474	55	9CBA18	5.48837	97	F94B7D	4.92173
13	3EBA79	5.1286	56	05FD60	5.16162	98	78D213	5.38737
14	8CF2B6	4.94086	57	FC2322	4.95813	99	9EDE1D	5.05499
15	F052BB	4.73214	58	F0898A	5.74311	100	8E3B36	5.76876
16	36BF3C	5.22147	59	F22469	5.32756	101	74AF80	5.10266
17	56684C	5.74529	60	57673A	6.33084	102	CC8769	4.89204
18	654D89	5.24514	61	1A38DB	5.56632	103	265829	5.3906
19	2781F3	4.89117	62	A69433	4.90576	104	7CF001	5.44668
20	46876A	4.62728	63	9B80BB	4.82736	105	B5D0CE	5.14106
21	CE53D0	4.94685	64	6B75F8	4.66086	106	43277F	5.24521
22	523974	4.87706	65	DF32CD	5.28631	107	015C21	4.93279
23	4A0453	5.02621	66	D1F692	4.86675	108	A4AB8B	5.01596
24	47F9ED	5.91721	67	E6FCC8	5.65351	109	B3A938	5.15091
25	BB2C96	4.83723	68	08DF3D	4.79648	110	3333D3	4.78207
26	48B142	5.21914	69	39CFC0	4.95539	111	AFA03D	5.52105
27	FFDA6B	5.52578	70	EC8BAD	5.95318	112	88F995	5.11364
28	8F8DC4	4.95493	71	16B9AC	5.12127	113	E1668B	5.77986
29	1A1037	5.06145	72	6E6D24	5.88171			
30	50F345	5.39428	73	B2027C	5.22276			
31	9C2ABE	5.15445	74	E05272	5.72503			

Table 482—PAPR reduction sequence for BS with two antennas (512-FFT) ***(continued)***

ID cell	Sequence	PAPR	ID cell	Sequence	PAPR	ID cell	Sequence	PAPR
32	97191F	4.88407	75	859C89	5.65769			
33	61FCD0	5.82153	76	6624DD	4.98579			
34	6F8969	6.25241	77	F2D404	5.27575			
35	156F56	5.42931	78	8B81D9	5.26581			
36	BC8D17	5.08773	79	5C69D7	4.97194			
37	F3092A	5.05832	80	645838	5.86814			
38	A41DBD	4.75378	81	8DEFA5	4.94176			
39	6EA1E4	4.83662	82	22059A	5.76969			
40	6A29F7	5.19888	83	70A052	5.26498			
41	462826	4.79626	84	50E6D6	5.65313			
42	5FB555	4.97374						

$$G = [g_0 g_1 g_2 \ldots g_{47}] = \begin{bmatrix} 0101010101010101000001010110001100000000111111111 \\ 0011001100110011000100010001000100000011010101 10 \\ 0000111100001111010101010101010100000101011000 11 \\ 0000000011111111001100110011001100010001000100 01 \\ 0000001101010110000011110000111101010101010101 01 \\ 0000010101100011000000001111111100110011001100 11 \\ 0001000100010001000000110101011000001111000011 11 \end{bmatrix} \quad (113)$$

Table 483—Permutation (*l* = 0, 1, 2, …, 47)

$\Pi(l)$	5,6,4,10,7,2,14,0,8,11,13,12,3,15,1,9,26,29,19,27,31,17,20,16,23,28,24,21,18,30,25,22,43,46,34,47, 44,41,37,36,39,38,35,33,32,45,40,42

8.4.8.5.1.2 PAPR reduction sequence for BS with three or four antennas

For FFT size = 2048, the sequence *T(k)* is the same as $N_t = 2$, $N_{FFT} = 1024$ case.

For FFT size = 1024, the sequence *T(k)* is the same as $N_t = 2$, $N_{FFT} = 512$ case.

For FFT size = 512,

$$G = [g_0 g_1 g_2 \ldots g_{95}] =$$

[0101010101010101000100010001000100000101011000110000001101010110000000001111111100001111000011 11
0011001100110011010101010101010101000100010001000100000101011000110000001101010110000000001111111 1
0000111100001111001100110011001101010101010101010100010001000100010000010101100011000000110101011 0
0000000011111111000011110000111100110011001100110101010101010101010100010001000100010000010101100011

Table 484—PAPR reduction sequence for BS with two antennas (128-FFT)

ID cell	Sequence	PAPR	ID cell	Sequence	PAPR	ID cell	Sequence	PAPR
0	1 1 1 0 1 1	6.67057	43	1 0 0 1 1 0	6.50695	86	1 0 1 0 1 1	5.47231
1	0 0 1 1 0 0	5.883	44	0 0 0 0 0 1	5.58222	87	0 1 0 1 1 1	4.27052
2	1 1 1 1 1 1	4.95588	45	1 1 1 0 1 1	5.19814	88	0 0 0 1 0 1	4.98455
3	0 1 1 0 0 1	4.92942	46	1 0 0 1 1 0	5.50865	89	0 0 0 1 0 1	4.85573
4	1 0 0 1 0 0	4.84232	47	1 0 0 0 0 0	5.40503	90	1 0 1 1 0 0	4.66224
5	0 1 0 1 0 0	5.97707	48	1 0 0 1 0 0	4.48416	91	0 1 1 0 0 1	5.59862
6	0 0 0 0 1 1	5.2818	49	0 1 0 0 1 1	5.59862	92	0 1 0 1 0 1	5.13782
7	0 1 1 1 0 1	4.62935	50	0 1 0 1 0 0	4.76609	93	1 1 0 0 0 0	5.73533
8	1 1 1 1 0 1	4.80191	51	0 1 1 1 0 1	4.87033	94	0 1 1 1 1 1	6.31115
9	0 1 1 1 1 0	4.62839	52	1 1 1 0 0 1	5.60052	95	0 1 1 1 0 1	4.76096
10	1 0 0 0 0 0	4.93818	53	1 0 1 0 0 1	4.18939	96	0 1 0 1 1 1	4.43229
11	0 0 0 0 1 0	4.62239	54	1 1 1 1 0 1	5.00411	97	1 0 0 1 1 1	4.52351
12	1 1 0 0 1 1	6.23206	55	1 1 1 1 0 0	4.91284	98	1 0 0 1 0 0	4.16266
13	0 0 0 0 0 1	4.76556	56	0 0 0 0 1 0	6.92296	99	1 1 1 0 1 0	5.72573
14	1 1 0 1 1 1	5.21957	57	0 0 0 0 1 0	5.39012	100	0 1 0 1 0 0	4.34746
15	0 1 1 0 0 0	6.73261	58	0 1 1 0 0 1	6.0232	101	1 0 0 1 0 0	6.81937
16	0 0 1 1 1 0	4.9981	59	1 1 0 1 0 0	6.27241	102	0 1 0 1 1 1	5.86829
17	0 1 1 0 0 0	5.23977	60	0 0 1 0 1 0	5.26582	103	0 1 0 1 1 0	5.22038
18	1 1 1 1 1 0	5.59862	61	1 0 0 0 0 1	5.47146	104	1 0 0 0 0 0	4.8724
19	0 1 1 1 0 1	6.75846	62	0 0 0 0 1 0	6.43249	105	0 1 1 0 1 1	6.7858
20	0 0 1 1 1 1	4.86729	63	1 0 0 1 1 1	4.69906	106	1 0 0 0 1 0	5.75267
21	1 1 0 0 0 0	5.57405	64	1 1 1 0 0 0	5.28969	107	1 1 0 0 1 1	5.1796
22	1 0 1 0 0 1	4.82303	65	1 0 1 0 1 1	6.66865	108	1 1 1 0 0 0	6.00083
23	0 1 0 1 0 1	4.54948	66	1 0 1 0 1 1	5.90593	109	1 0 1 0 0 1	4.6724
24	0 1 1 1 0 1	5.45765	67	0 1 1 1 0 0	6.13642	110	1 0 0 1 0 0	4.8345
25	1 1 0 0 0 1	4.91648	68	0 0 1 0 0 0	4.9337	111	0 0 1 1 1 0	4.05646
26	1 0 0 1 0 1	3.95813	69	0 1 1 0 1 0	5.13715	112	0 0 1 1 1 1	5.6271
27	1 0 0 0 0 1	6.03433	70	1 1 1 1 0 0	5.05877	113	0 1 1 1 1 1	5.59862
28	1 1 0 0 0 1	4.50629	71	1 0 0 1 0 0	5.42538			
29	0 1 0 0 0 1	4.80454	72	1 1 1 0 1 0	5.21428			
30	1 0 1 1 1 1	4.94614	73	1 0 1 1 0 1	4.27288			
31	1 0 1 1 0 0	4.54236	74	0 1 0 0 0 1	4.63478			

Table 484—PAPR reduction sequence for BS with two antennas (128-FFT) ***(continued)***

ID cell	Sequence	PAPR	ID cell	Sequence	PAPR	ID cell	Sequence	PAPR
32	0 1 1 0 0 0	3.86311	75	1 0 1 0 0 1	5.47216			
33	0 1 1 0 0 0	5.18297	76	1 0 1 0 0 0	6.49514			
34	1 1 0 1 0 1	5.59137	77	1 1 0 0 0 0	5.35897			
35	1 0 0 1 0 0	5.51632	78	0 0 0 0 0 1	5.59862			
36	1 1 0 0 1 0	4.64969	79	0 1 0 0 0 0	5.36634			
37	1 1 1 0 0 0	5.59862	80	0 0 0 0 1 0	4.79522			
38	0 0 0 0 1 1	6.56393	81	0 0 1 1 1 0	5.03585			
39	1 0 1 0 0 0	6.63257	82	1 1 0 0 1 1	6.41538			
40	0 0 1 0 1 1	6.30837	83	0 1 1 0 0 1	5.92329			
41	0 0 0 1 0 1	5.76388	84	1 0 1 1 1 0	5.24541			
42	0 0 0 1 1 1	5.17733	85	0 0 0 0 0 1	6.41868			

0000001101010110000000001111111100001111000011110011001100110011010101010101010100010001000100010001
0000010101100011000000110101011000000000111111110000111100001111001100110011001100110101010101010101010101
0001000100010001000001010110001100000011010101100000000001111111100001111000011110011001100110011]

Table 485 specifies the permutations for BS with three and four antennas and FFT size = 512. The PAPR reduction sequences for BS with 3 and 4 antennas and FFT size = 512 are listed in Table 486.

Table 485—Permutation (*l* = 0, 1, 2, …, 95)

$\Pi(l)$	2,6,0,10,14,11,7,3,8,15,1,12,9,4,13,5,18,26,24,17,29,19,21,16,23,22,25,28,27,31,20,30,41,34, 38,44,36,43,35,32,45,47,46,39,40,33,37,42,60,56,59,61,51,62,52,49,58,48,53,50,54,57,55,63, 71,77,76,74,67,66,68,75,78,64,69,79,72,70,65,73,81,92,83,87,82,94,86,88,95,91,93,90,84,85, 80,89

For FFT size = 128, see Equation (114).

$$G = [g_0 g_1 g_2 \ldots g_{23}] = \begin{bmatrix} 0101010101010101010101 \\ 0011001100110011001100 11 \\ 0000111100001111000011 11 \\ 1111111100000000111111 11 \\ 0000000011111111111111 11 \\ 1111110010100000010010 000 \\ 1111101000000110000011 00 \end{bmatrix} \quad (114)$$

Table 487 specifies the permutations for BS with three and four antennas and FFT size = 128. The PAPR reduction sequences for BS with three and four antennas and FFT size = 128 are listed in Table 488.

Table 486—PAPR reduction sequence for BS with 3 or 4 antennas (512-FFT)

ID cell	Sequence	PAPR	ID cell	Sequence	PAPR	ID cell	Sequence	PAPR	ID cell	Sequence	PAPR
0	CB3	6.26336	32	1F3	5.26429	64	73E	5.29366	96	478	4.77121
1	D47	5.27748	33	573	4.94488	65	0FE	6.62956	97	17E	5.66118
2	59D	4.9581	34	07F	6.36319	66	5CB	4.88939	98	696	4.93494
3	F21	5.05997	35	9A3	5.91188	67	C59	4.30678	99	31A	5.36534
4	87E	6.51422	36	C86	5.36258	68	5B5	5.54517	100	9D7	4.78933
5	BFA	5.33856	37	349	4.98064	69	E2D	5.27261	101	2A4	5.45932
6	4D4	7.0618	38	C83	6.14253	70	5F6	5.03828	102	35C	6.40963
7	3E0	6.41769	39	EE0	5.95156	71	9A9	5.25379	103	CBD	5.39788
8	3E4	4.87727	40	4CA	5.40169	72	BDB	5.14859	104	44C	4.38835
9	6F7	4.15136	41	634	4.82317	73	AE7	5.39255	105	416	4.38145
10	8D0	5.86359	42	360	5.05168	74	2C2	4.97124	106	6B6	5.5007
11	33E	5.68455	43	7B6	5.20885	75	6A3	6.20876	107	E79	5.6706
12	CA3	5.79482	44	4A7	5.52378	76	D3A	4.83271	108	34F	5.62588
13	119	5.29216	45	0D4	6.47369	77	741	5.5686	109	DC4	5.29578
14	AA3	5.3423	46	523	5.20757	78	737	5.64126	110	586	5.00808
15	EC5	5.40257	47	F29	5.0776	79	7AC	5.17063	111	DF3	4.48385
16	A08	5.63148	48	A67	5.52381	80	79F	5.0828	112	F2B	5.53794
17	96C	5.44285	49	251	5.10732	81	3FA	5.22885	113	ED1	5.58523
18	9D3	5.19112	50	B8E	4.77121	82	99C	6.01707			
19	5BC	5.41859	51	5B0	5.38618	83	755	6.51422			
20	4BC	5.96539	52	B6B	5.20069	84	A44	4.93486			
21	D15	6.07706	53	DCC	6.18175	85	F67	4.86142			
22	A31	4.76142	54	356	5.46713	86	4D4	6.21941			
23	4B3	4.67373	55	7FB	6.23427	87	810	4.25677			
24	B0A	5.24324	56	C6B	4.64117	88	201	4.47647			
25	BB7	4.81109	57	956	5.81606	89	054	6.8165			
26	245	4.99566	58	100	5.04293	90	654	5.87238			
27	834	4.81878	59	DF0	6.56931	91	F34	5.31419			
28	A59	5.78273	60	663	5.4996	92	4FF	6.88515			
29	807	5.59368	61	602	5.72958	93	4AA	6.75475			
30	694	5.53837	62	894	4.96955	94	E8D	6.10937			
31	6C6	6.42782	63	247	5.37554	95	944	4.79898			

Table 487—Permutation (l = 0, 1, 2, …, 23)

$\Pi(l)$	11,6,4,9,7,8,0,10,5,1,2,3,17,20,21,14,18,16,23,15,19,22,12,13

Table 488—PAPR reduction sequence for BS with 3 or 4 antennas (128-FFT)

ID cell	Sequence	PAPR	ID cell	Sequence	PAPR	ID cell	Sequence	PAPR	ID cell	Sequence	PAPR
0	0 1 0	5.35724	32	1 0 1	4.61762	64	0 1 1	3.52173	96	1 0 0	4.18255
1	0 0 0	5.17414	33	1 0 1	3.5604	65	0 0 0	5.01602	97	1 1 0	3.49527
2	1 1 1	6.51422	34	0 1 0	5.96329	66	0 0 1	6.01058	98	0 1 0	4.47417
3	0 0 0	3.82903	35	0 0 0	6.00008	67	0 1 0	4.70152	99	0 1 1	6.09081
4	1 1 0	5.5707	36	0 1 1	5.2032	68	0 0 0	3.37021	100	1 0 1	4.2738
5	1 1 1	4.51562	37	0 1 1	5.5032	69	0 0 1	5.18544	101	0 0 1	3.77032
6	1 0 1	4.99659	38	1 1 1	4.63273	70	1 0 1	5.59372	102	0 0 0	4.79531
7	1 0 0	4.507	39	0 0 0	4.79863	71	1 1 0	4.64525	103	1 1 0	3.80557
8	0 0 0	2.77148	40	1 1 1	6.68743	72	0 0 0	4.54804	104	0 0 1	3.67728
9	0 1 1	4.52863	41	1 0 1	4.93428	73	1 0 1	6.18314	105	1 0 0	5.55408
10	0 0 1	4.77121	42	1 1 0	5.43501	74	0 1 0	4.32808	106	1 1 1	4.96913
11	1 0 0	4.59416	43	1 1 1	5.22032	75	0 0 1	4.56337	107	0 1 1	4.52983
12	0 1 0	3.78955	44	0 0 0	6.51422	76	0 0 0	5.36844	108	0 1 1	5.0537
13	1 0 0	4.60896	45	1 1 1	4.98055	77	0 1 1	4.98055	109	0 1 1	4.67829
14	1 0 0	4.5935	46	0 0 1	3.50075	78	0 0 0	4.43788	110	1 0 1	6.11194
15	1 0 0	4.22853	47	0 0 0	5.08034	79	1 0 0	6.51422	111	1 1 0	3.53966
16	1 0 1	4.53933	48	0 1 0	5.41647	80	1 1 1	4.21693	112	1 0 0	4.49668
17	1 0 0	4.22832	49	1 1 0	4.02914	81	0 0 1	4.73888	113	0 0 0	4.44827
18	0 1 1	4.53739	50	0 1 0	3.77237	82	1 1 1	5.31912			
19	0 0 1	4.84545	51	1 1 1	3.99062	83	0 0 1	6.51422			
20	1 0 0	5.1608	52	0 1 1	4.62794	84	0 0 1	6.01936			
21	1 1 0	6.19203	53	1 0 0	4.81314	85	1 0 1	5.38087			
22	0 0 1	4.58568	54	0 0 0	4.20522	86	1 1 0	4.70313			
23	0 1 1	5.684	55	1 0 0	5.39106	87	0 0 0	3.79899			
24	0 1 0	4.76503	56	0 1 1	5.58402	88	1 0 0	5.31434			
25	0 0 0	4.77579	57	1 1 1	4.58125	89	1 1 0	6.41534			
26	0 1 0	4.73628	58	0 0 0	4.72378	90	0 0 1	4.11983			
27	1 0 0	4.98055	59	0 0 0	4.16781	91	1 1 0	4.18856			

Table 488—PAPR reduction sequence for BS with 3 or 4 antennas (128-FFT) *(continued)*

ID cell	Sequence	PAPR	ID cell	Sequence	PAPR	ID cell	Sequence	PAPR	ID cell	Sequence	PAPR
28	0 1 1	4.77121	60	0 0 1	6.57249	92	0 1 0	4.81524			
29	1 0 0	4.44124	61	1 0 0	3.98784	93	0 1 0	5.0717			
30	0 0 0	5.17708	62	0 0 1	5.95339	94	0 1 0	5.05024			
31	0 0 0	4.2966	63	1 1 0	5.27337	95	0 0 0	4.77121			

8.4.8.6 STC subpacket combining

In the STC transmission, for both DL and UL, the STC subpacket retransmission can be generated by using the Space time code incremental redundancy version. The transmission rule for space-time coded incremental redundancy codes set is listed in Table 489, Table 490, and Table 491.

Table 489—STC subpacket combining (2-Tx antenna case)

	Initial transmission	Odd retransmission	Even retransmission
Space time code incremental redundancy for Matrix A	$S_2^{(0)} = \begin{bmatrix} S_1 \\ S_2 \end{bmatrix}$	$S_2^{(odd)} = \begin{bmatrix} -S_2{}^* \\ S_1{}^* \end{bmatrix}$	$S_2^{(even)} = \begin{bmatrix} S_1 \\ S_2 \end{bmatrix}$

Table 490—STC subpacket combining (3-Tx antenna case)

	Initial transmission	Odd retransmission	Even retransmission
Space time code incremental redundancy for Matrix C	$S_2^{(0)} = \begin{bmatrix} S_1 \\ S_2 \\ S_3 \end{bmatrix}$	$S_2^{(odd)} = \begin{bmatrix} -S^*{}_2 \\ S^*{}_1 \\ S^*{}_3 \end{bmatrix}$	$S_2^{(even)} = \begin{bmatrix} S_1 \\ S_2 \\ S_3 \end{bmatrix}$

Table 491—STC subpacket combining (4-Tx antenna case)

	Initial transmission	Odd retransmission	Even retransmission
Space time code incremental redundancy for Matrix C	$S_2^{(0)} = \begin{bmatrix} S_1 \\ S_2 \\ S_3 \\ S_4 \end{bmatrix}$	$S_2^{(odd)} = \begin{bmatrix} -S^*{}_2 \\ S^*{}_1 \\ -S^*{}_4 \\ S^*{}_3 \end{bmatrix}$	$S_2^{(even)} = \begin{bmatrix} S_1 \\ S_2 \\ S_3 \\ S_4 \end{bmatrix}$

The MS shall process the initial transmission, first retransmission, and second retransmission, etc., in the form of space time decoding. The retransmission of FEC codeword shall use the Chase combing retransmission.

8.4.8.7 Cyclic delay diversity (CDD)

The BS and MS may apply the cyclic delay diversity (CDD) technique in order to improve performance or split the power between multiple transmit antennas. The same signal (including data, pilots, preamble, midamble, etc) may be transmitted from several antennas simultaneously, with different cyclic delay applied to each signal in order to reduce the potential of nulling in the receiver's antenna. Cyclic delay means the samples in the useful symbol time T_b are shifted D samples forward, the last D samples are copied to the first D samples, and the CP is regenerated from the last samples of the rotated symbol. An equivalent description is to multiply all subcarriers by $w_k = \exp\left(-\frac{j2\pi Dk}{N}\right)$. Each transmit antenna uses a different delay value and potentially a different gain and phase.

In case of applying such techniques then in all references to “antenna 0,” “antenna 1,” and so forth, in the rest of 8.4, shall refer to a logical antenna, representing the signal defined in 8.4.2.5, which may be transmitted from several physical antennas. An example is shown in Figure 283.

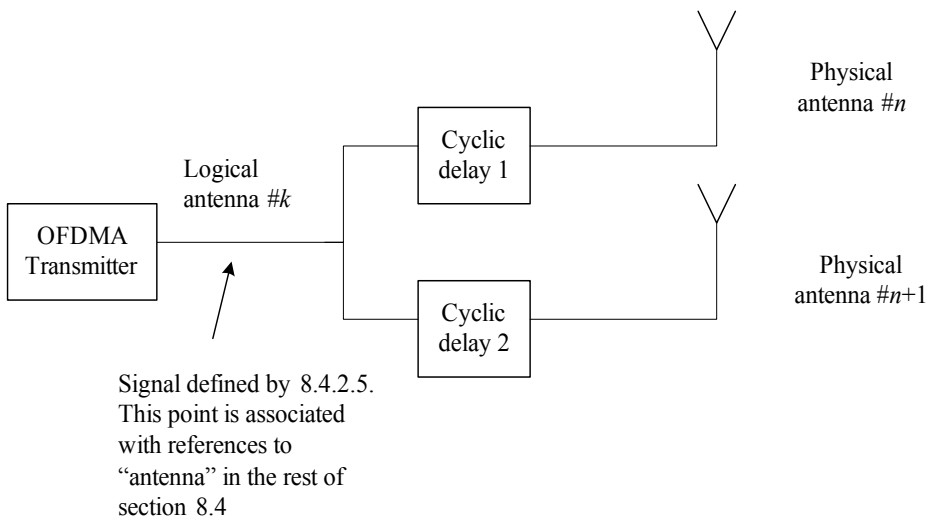

Figure 283—Example of single logical antenna split into two physical antennas with cyclic delays

For example, a 2 antenna BS using a 2 antenna STC zone, may use CDD in the first zone (with a single logical antenna) in order to effectively split the transmitted power between the two antennas and obtain diversity gain.

The following requirements apply to CDD:

1) The CDD parameters and arrangement of antennas shall not change within the zone. For this purpose the preamble is considered a part of the first PUSC zone.
2) The CDD parameters (delays and powers) and arrangement of antennas shall be the same over zones which have broadcast pilots (dedicated pilots = 0) and have the same number of antennas specified in the STC zone IE, over all frames. For this purpose the first PUSC zone is considered to have dedicated pilots = 0 and number of antennas equals 1.
3) All references to the power transmitted from an antenna (antenna #k) shall be interpreted as the total power transmitted from physical antennas associated with logical antenna #k.

4) Zone boosting limitations of 8.4.9.6 shall be kept with respect to the total power as defined above.
5) The maximum delay in any physical antenna relative to the reference antenna (antenna #0) shall not exceed 1.4% of the useful symbol time Tb in any zone. The delay shall always be positive.
6) If the power used by physical antennas associated with the same logical antenna is not equal, it is recommended that antennas transmitting higher power shall use smaller delay values.

8.4.9 Channel coding

Channel coding procedures including randomization (see 8.4.9.1), FEC encoding (see 8.4.9.2), bit interleaving (see 8.4.9.3), repetition (see 8.4.9.5), and modulation (see 8.4.9.4) are shown in Figure 284.

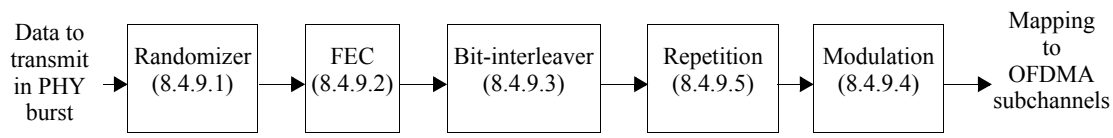

Figure 284—Channel coding process for regular and repetition coding transmission

Repetition shall be applied only to QPSK modulation.

8.4.9.1 Randomization

Data randomization is performed on all data transmitted on the DL and UL, except the FCH. The randomization is initialized on each FEC block. If the amount of data to transmit does not fit exactly the amount of data allocated, padding of 0xFF (1 only) shall be added to the end of the transmission block up to the amount of data allocated. Here, the amount of data allocated means the amount of data that corresponds to the amount of $\lfloor N_s / R \rfloor$ slots, where N_s is the number of the slots allocated for the data burst and R is the repetition factor used.

The PRBS generator shall be $1 + X^{14} + X^{15}$, as shown in Figure 285. Each data byte to be transmitted shall enter sequentially into the randomizer, MSB first. Preambles are not randomized. The seed value shall be

used to calculate the randomization bits, which are combined in an XOR operation with the serialized bit stream of each FEC block. The randomizer sequence is applied only to information bits.

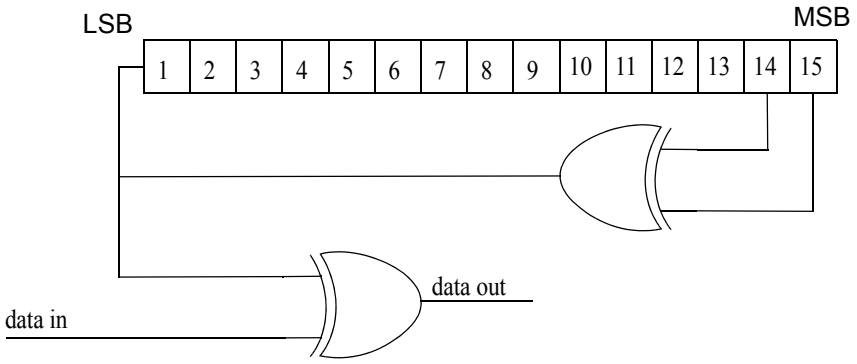

Figure 285—PRBS generator for data randomization

The bit issued from the randomizer shall be applied to the encoder.

The randomizer is initialized with the vector [LSB] 0 1 1 0 1 1 1 0 0 0 1 0 1 0 1 [MSB].

HARQ requires that the randomizer pattern be identical for each HARQ attempt. For HARQ operation, the randomizer shall be initialized with the vector created as shown in Figure 286.

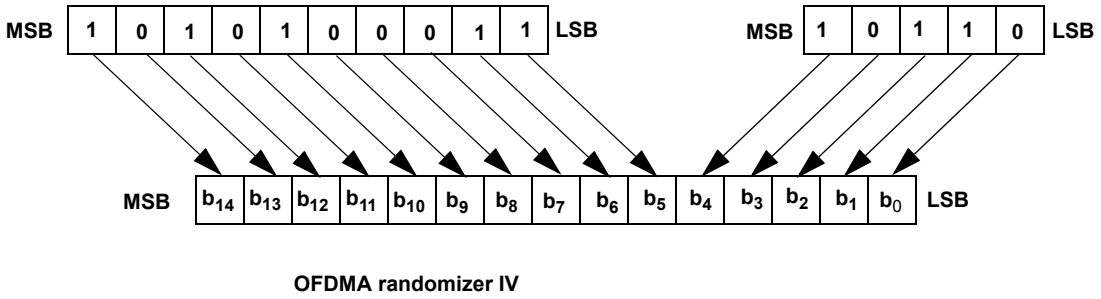

Figure 286—Creation of OFDMA randomizer initialization vector for HARQ

8.4.9.2 Encoding

The coding method used as the mandatory scheme shall be the tail-biting convolutional encoding specified in 8.4.9.2.1, and the optional modes of encoding in 8.4.9.2.2 and 8.4.9.2.3 shall be also supported.

The encoding block size shall depend on the number of slots allocated and the modulation specified for the current transmission.

Concatenation of a number of slots shall be performed in order to make larger blocks of coding where it is possible, with the limitation of not exceeding the largest supported block size for the applied modulation and coding. Table 493 specifies the concatenation of slots for different allocations and modulations. The parameters in Table 492 and Table 493 shall apply to the CC encoding scheme (see 8.4.9.2.1) and the BTC encoding scheme (see 8.4.9.2.2). For the CTC encoding scheme (see 8.4.9.2.3), the concatenation rule is defined in 8.4.9.2.3.3, and for the LDPC encoding scheme (see 8.4.9.2.5) the concatenation rule is defined in 8.4.9.2.5.3.

For any modulation and FEC rate, given an allocation of *n* slots, the following parameters are defined:

j is parameter dependent on the modulation and FEC rate
n is floor (number of allocated slots * STC rate/(repetition factor * number of STC layers))
k is floor (*n*/*j*)
m is *n* modulo *j*

Table 492 shows the rules used for slot concatenation.

Table 492—Slots concatenation rule

Number of slots	Slots concatenated
$n \leq j$	1 block of *n* slots

$n > j$	If (n mod $j = 0$)
	k blocks of *j* slots
	
	else
	(k–1) blocks of *j* slots
	1 block of ceil((m+j)/2) slots
	1 block of floor((m+j)/2) slots

Table 493—Encoding slot concatenation for different allocations and modulations

Modulation and rate	*j*
QPSK-1/2	$j = 6$
QPSK-3/4	$j = 4$
16-QAM-1/2	$j = 3$
16-QAM-3/4	$j = 2$
64-QAM-1/2	$j = 2$
64-QAM-2/3	$j = 1$
64-QAM-3/4	$j = 1$

8.4.9.2.1 Convolutional coding (CC)

Each FEC block is encoded by the binary convolutional encoder, which shall have native rate of 1/2, a constraint length equal to $K = 7$, and shall use the following generator polynomials codes to derive its two code bits:

$$\begin{aligned} G_1 &= 171_{OCT} \qquad FOR\ \ X \\ G_2 &= 133_{OCT} \qquad FOR\ \ Y \end{aligned} \tag{115}$$

The generator is depicted in Figure 287.

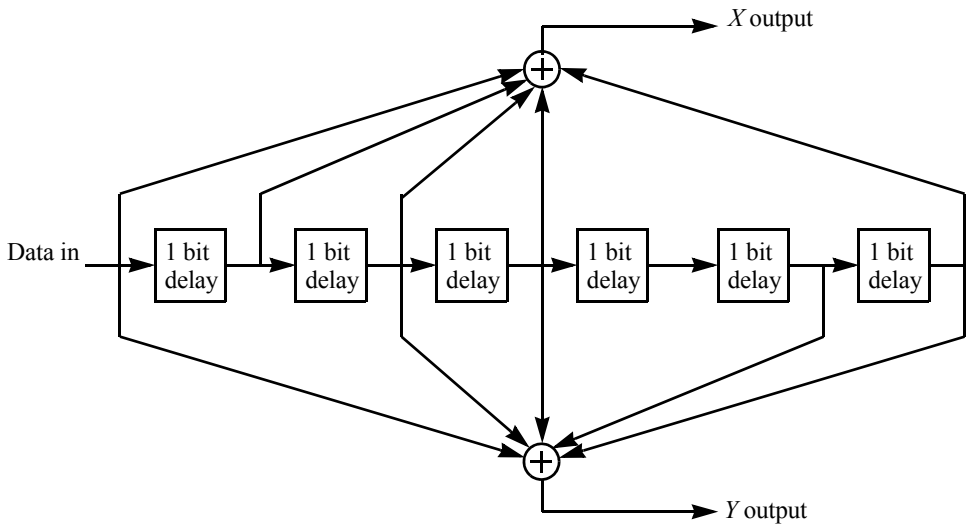

Figure 287—Convolutional encoder of rate 1/2

The puncturing patterns and serialization order that shall be used to realize different code rates are defined in Table 494. In the table, "1" means a transmitted bit and "0" denotes a removed bit, whereas *X* and *Y* are in reference to Figure 287.

Table 494—Convolutional code with puncturing configuration

	Code rates		
Rate	1/2	2/3	3/4
d_{free}	*10*	6	5
X	1	10	101
Y	1	11	110
XY	X_1Y_1	$X_1Y_1Y_2$	$X_1Y_1Y_2X_3$

Each FEC block is encoded by a tail-biting convolutional encoder, which is achieved by initializing the encoders memory with the last data bits of the FEC block being encoded (the packet data bits numbered $b_{n-5}...b_n$).

Table 495 defines the basic sizes of the useful data payloads to be encoded in relation with the selected modulation type and encoding rate and concatenation rule.

8.4.9.2.1.1 Incremental redundancy HARQ support (optional)

HARQ implementation is optional. An incremental redundancy (IR) based HARQ is taking the puncture pattern into account, and for each retransmission the coded block is not the same. Different puncture patterns are used to create HARQ packets identified by SPID. The puncture patterns are predefined or can be easily

Table 495—Useful data payload for an FEC Block

	QPSK		16 QAM		64 QAM		
Encoding rate	R=1/2	R=3/4	R=1/2	R=3/4	R=1/2	R=2/3	R=3/4
Data payload (bytes)	6						
		9					
	12		12				
	18	18		18	18		
	24		24			24	
		27					27
	30						
	36	36	36	36	36		

deducted from the original pattern, and can be selected based on SPID. At the receiver, the received signals are depunctured according to its specific puncture pattern, which is decided by the current SPID, then the combination is performed at bit metrics level.

The puncture pattern for the HARQ packet with SPID = 0 is the same as the mandatory one in Table 496. The puncture pattern for the HARQ packet with SPID = 1 is the left cyclic shift of the one from SPID = 0, as shown in Table 496. Following the same rule, the puncture patterns for packets with SPID = 2 and SPID = 3 are shown in Table 496.

Table 496—Puncture pattern definition for HARQ

		Code Rate			
		1/2	**2/3**	**3/4**	**5/6**
SPID = 0	**X**	1	10	101	10101
	Y	1	11	110	11010
SPID = 1	**X**	1	01	011	01011
	Y	1	11	101	10101
SPID = 2	**X**	1	10	110	10110
	Y	1	11	011	01011
SPID = 3	**X**	1	01	101	01101
	Y	1	11	110	10110

8.4.9.2.2 Block turbo coding (BTC) (optional)

The BTC is based on the product of two simple component codes, which are binary extended Hamming codes or parity check codes from the set depicted in Table 497.

Table 497 specifies the generator polynomials for the Hamming codes. To create extended Hamming codes, an overall even parity check bit is added at the end of each code word.

Table 497—OFDMA Hamming code generator polynomials

n'	*k'*	Generator polynomial
15	11	X^4+X^1+1
31	26	X^5+X^2+1
63	57	X^6+X+1

The component codes are used in a two-dimensional matrix form, which is depicted in Figure 288. The k_x information bits in the rows are encoded into n_x bits by using the component block (n_x, k_x) code specified for the respective composite code. After encoding the rows, the columns are encoded using a block code (n_y, k_y), where the check bits of the first code are also encoded. The overall block size of such a product code is $n = n_x \times n_y$, the total number of information bits $k = k_x \times k_y$, and the code rate is $R = R_x \times R_y$, where $R_i = k_i/n_i$, $i = x, y$. The Hamming distance of the product code is $d = d_x \times d_y$. Data bit ordering for the composite BTC matrix is the first bit in the first row is the LSB and the last data bit in the last data row is the MSB.

Transmission of the block over the channel shall occur in a linear fashion, with all bits of the first row transmitted left to right followed by the second row, etc.

To match a required packet size, BTCs may be shortened by removing symbols from the BTC array. In the two-dimensional case, rows, columns, or parts thereof can be removed until the appropriate size is reached. There are three steps in the process of shortening product codes:

Step 1) Remove I_x rows and I_y columns from the two-dimensional code. This is equivalent to shortening the constituent codes that make up the product code.

Step 2) Remove B individual bits from the first row of the two-dimensional code starting with the LSB.

Step 3) Use if the product code specified from Step 1) and Step 2) of this subclause has a nonintegral number of data bytes. In this case, the Q leftover LSB are zero-filled by the encoder. After decoding at the receive end, the decoder shall strip off these unused bits and only the specified data payload is passed to the next higher level in the PHY. The same general method is used for shortening the last code word in a message where the available data bytes do not fill the available data bytes in a code block.

These three processes of code shortening are depicted in Figure 288. In the first two-dimensional BTC, a nonshortened product code is shown. By comparison, a shortened BTC is shown in the adjacent two-dimensional array. The new coded block length of the code is $(n_x - I_x)(n_y - I_y) - B$. The corresponding information length is given as $(k_x - I_x)(k_y - I_y) - B - Q$. Consequently, the code rate is given by Equation (116).

$$R = \frac{(k_x - I_x)(k_y - I_y) - B - Q}{(n_x - I_x)(n_y - I_y) - B} \tag{116}$$

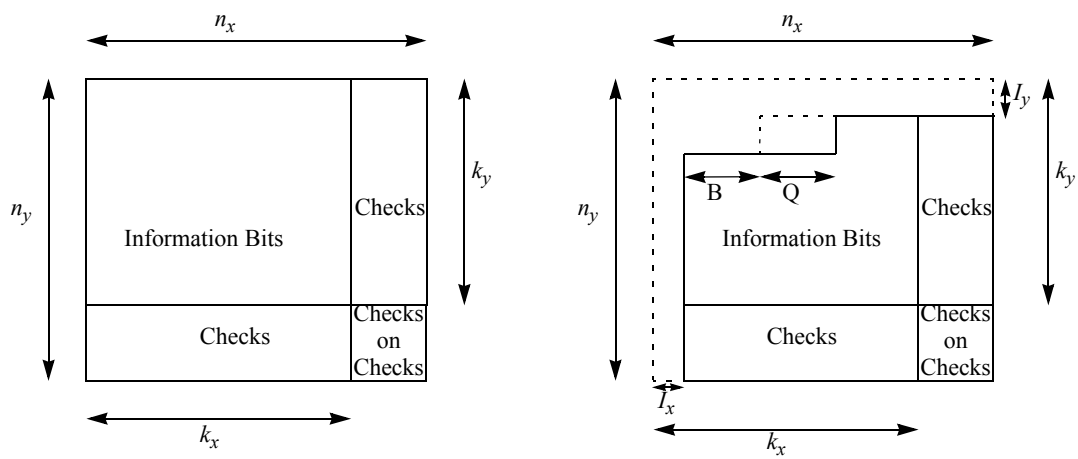

Figure 288—BTC and shortened BTC structure

Table 498 gives the block sizes for the optional modulation and coding schemes using BTC. Table 499 gives the code parameters for each of the possible data and coded block sizes.

Table 498—Useful data payload for an FEC block

	QPSK		16-QAM		64-QAM		Coded bytes
Encoding rate	R=1/2	R=3/4	R=1/2	R=3/4	R=1/2	R=3/4	
Allowed data (bytes)	6	9	—	—	—	—	12
	12	20	16	20	—	—	24
	18	25	—	—	16	25	36
	23	35	23	35	—	—	48
	31	—	—	—	—	—	60
	40	—	40	—	40	—	72

8.4.9.2.3 Convolutional turbo codes (CTCs) (optional)

8.4.9.2.3.1 CTC encoder

The CTC encoder, including its constituent encoder, is depicted in Figure 289. The CTC defined in this subclause can be used for the support of the optional HARQ. It uses a double binary Circular Recursive Systematic Convolutional code. The bits of the data to be encoded are alternately fed to A and B, starting with the MSB of the first byte being fed to A. The encoder is fed by blocks of k bits or N couples ($k = 2 \times N$ bits). For all the frame sizes, k is a multiple of 8 and N is a multiple of 4. Further, N shall be limited to $8 \leq N/4 \leq 1024$.

The polynomials defining the connections are described in octal and symbol notations as follows:

Table 499—Optional channel coding per modulation

Data bytes	Coded bytes	Constituent	Code parameters
6	12	(8,7)(32,26)	I_x=4, I_y=8, B=0, Q=6
9	12	(16,15)(16,15)	I_x=6, I_y=6, B=4, Q=5
12	24	(32,31)(16,11)	I_x=14, I_y=5, B=6, Q=0
20	24	(16,15)(16,15)	I_x=2, I_y=2, B=4, Q=5
18	36	(32,31)(16,11)	I_x=5, I_y=5, B=9, Q=3
25	36	(8,7)(64,57)	I_x=2, I_y=16, B=0, Q=5
23	48	(32,26)(16,11)	I_x=4, I_y=2, B=8, Q=6
35	48	(32,26)(16,15)	I_x=0, I_y=4, B=0, Q=6
31	60	(32,26)(32,26)	I_x=10, I_y=10, B=4, Q=4
40	72	(32,26)(32,26)	I_x=8, I_y=8, B=0, Q=4

— For the feedback branch: 0xB, equivalently $1 + D + D^3$ (in symbolic notation)
— For the Y parity bit: 0xD, equivalently $1 + D^2 + D^3$
— For the W parity bit: 0x9, equivalently $1 + D^3$

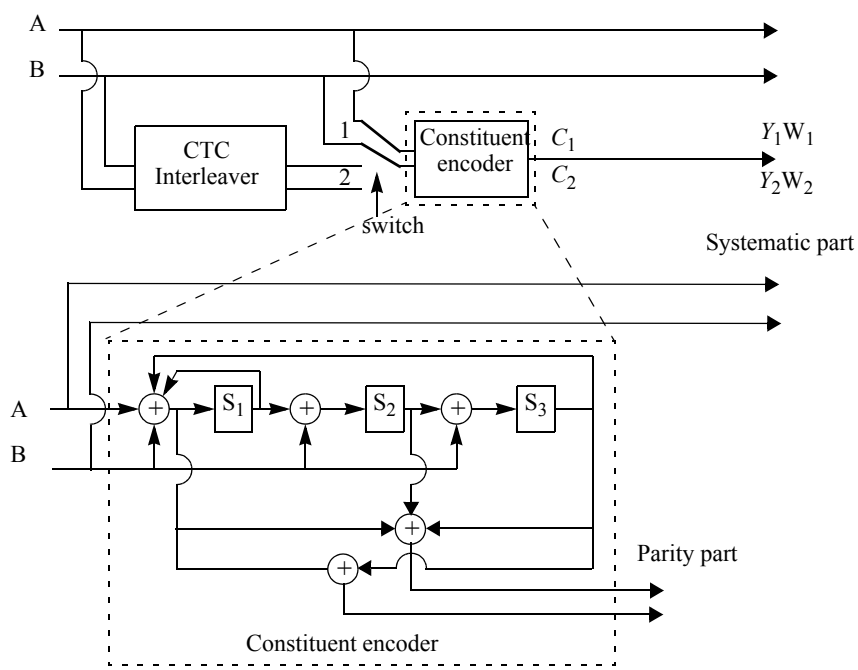

Figure 289—CTC encoder

First, the encoder (after initialization by the circulation state Sc_1, see 8.4.9.2.3.3) is fed the sequence in the natural order (position 1) with the incremental address $i = 0 .. N-1$. This first encoding is called C_1 encoding. Then the encoder (after initialization by the circulation state Sc_2, see 8.4.9.2.3.3) is fed by the

interleaved sequence (switch in position 2) with incremental address $j = 0, \ldots N - 1$. This second encoding is called C_2 encoding.

The order in which the encoded bit shall be fed into the subpacket generation block (8.4.9.2.3.4) is

A, B, Y_1, Y_2, W_1, W_2 =

$$A_0, A_1, \ldots, A_{N-1}, B_0, B_1, \ldots, B_{N-1}, Y_{1,0}, Y_{1,1}, \ldots, Y_{1,N-1}, Y_{2,0}, Y_{2,1}, \ldots, Y_{2,N-1}$$
$$W_{1,0}, W_{1,1}, \ldots, W_{1,N-1}, W_{2,0}, W_{2,1}, \ldots, W_{2,N-1}$$

Note that the interleaver (8.4.9.3) shall not be used when using CTC.

The encoding block size shall depend on the number of slots allocated and the modulation specified for the current transmission. Concatenation of a number of slots shall be performed in order to make larger blocks of coding where it is possible, with the limitation of not exceeding the largest supported block size for the applied modulation and coding. Table 501 specifies the concatenation of slots for different allocations and modulations. The concatenation rule shall not be used when using IR HARQ.

For any modulation and FEC rate, given an allocation of n slots, the following parameters are defined:

j	is parameter dependent on the modulation and FEC rate
n	is floor(number of allocated slots * STC rate/(repetition factor * number of STC layers))
k	is floor(n/j)
m	is n mod j

Table 500 shows the rules used for slot concatenation.

Table 500—Slots concatenation rule for CTC

Number of slots	Slots concatenated
$n \le j$ $n \ne 7$	1 block of n slots
$n \le j$ & $n = 7$	1 block of 4 slots 1 block of 3 slots

$n > j$	If (n mod $j = 0$)
	k blocks of j slots
	
	else
	(k–1) blocks of j slots
	1 block of L_{b1} slots
	1 block of L_{b2} slots
	
	where
	L_{b1} = ceil((m+j)/2)
	L_{b2} = floor((m+j)/2)
	
	If ($L_{b1} = 7$) or ($L_{b2} = 7$)
	$L_{b1} = L_{b1} + 1$; $L_{b2} = L_{b2} - 1$

Table 501—Encoding slot concatenation for different rates in CTC

Modulation and rate	*j*
QPSK-1/2	10
QPSK-3/4	6
16-QAM-1/2	5
16-QAM-3/4	3
64-QAM-1/2	3
64-QAM-2/3	2
64-QAM-3/4	2
64-QAM-5/6	2

Table 502 gives the block sizes, code rates, channel efficiency, and code parameters for the different modulation and coding schemes. As 64-QAM is optional, the codes for this modulation shall only be implemented if the modulation is implemented. Table 503 shows code parameters for HARQ.

Table 502—CTC channel coding per modulation

Modulation	Data block size (bytes)	Encoded data block size (bytes)	Code rate	N	P_0	P_1	P_2	P_3
QPSK	6	12	1/2	24	5	0	0	0
QPSK	12	24	1/2	48	13	24	0	24
QPSK	18	36	1/2	72	11	6	0	6
QPSK	24	48	1/2	96	7	48	24	72
QPSK	30	60	1/2	120	13	60	0	60
QPSK	36	72	1/2	144	17	74	72	2
QPSK	48	96	1/2	192	11	96	48	144
QPSK	54	108	1/2	216	13	108	0	108
QPSK	60	120	1/2	240	13	120	60	180
QPSK	9	12	3/4	36	11	18	0	18
QPSK	18	24	3/4	72	11	6	0	6
QPSK	27	36	3/4	108	11	54	56	2
QPSK	36	48	3/4	144	17	74	72	2
QPSK	45	60	3/4	180	11	90	0	90
QPSK	54	72	3/4	216	13	108	0	108
16-QAM	12	24	1/2	48	13	24	0	24
16-QAM	24	48	1/2	96	7	48	24	72

Table 502—CTC channel coding per modulation *(continued)*

Modulation	Data block size (bytes)	Encoded data block size (bytes)	Code rate	N	P_0	P_1	P_2	P_3
16-QAM	36	72	1/2	144	17	74	72	2
16-QAM	48	96	1/2	192	11	96	48	144
16-QAM	60	120	1/2	240	13	120	60	180
16-QAM	18	24	3/4	72	11	6	0	6
16-QAM	36	48	3/4	144	17	74	72	2
16-QAM	54	72	3/4	216	13	108	0	108
64-QAM	18	36	1/2	72	11	6	0	6
64-QAM	36	72	1/2	144	17	74	72	2
64-QAM	54	108	1/2	216	13	108	0	108
64-QAM	24	36	2/3	96	7	48	24	72
64-QAM	48	72	2/3	192	11	96	48	144
64-QAM	27	36	3/4	108	11	54	56	2
64-QAM	54	72	3/4	216	13	108	0	108
64-QAM	30	36	5/6	120	13	60	0	60
64-QAM	60	72	5/6	240	13	120	60	180

8.4.9.2.3.2 CTC interleaver

The interleaver requires the parameters P_0, P_1, P_2, and P_3 shown in Table 502.

The two-step interleaver shall be performed as follows:

Step 1: Switch alternate couples

Let the sequence $u_0 = [(A_0, B_0), (A_1, B_1), (A_2, B_2), (A_3, B_3), \ldots, (A_{N-1}, B_{N-1})]$ be the input to first encoding C_1.

for $i = 0 \ldots N-1$

if (i mod 2), let $(A_i, B_i) \rightarrow (B_i, A_i)$ (i.e., switch the couple)

This step gives a sequence $u_1 = [(A_0, B_0), (B_1, A_1), (A_2, B_2), (B_3, A_3), \ldots, (B_{N-1}, A_{N-1})] = [u_1(0), u_1(1), u_1(2), u_1(3), \ldots, u_1(N-1)]$.

Step 2: *P*(*j*)

The function $P(j)$ provides the address of the couple of the sequence u_1 that shall be mapped onto the address j of the interleaved sequence (i.e., $u_2(j) = u_1(P(j))$).

for $j = 0 \ldots N-1$

switch (j mod 4):

Table 503—CTC channel coding per modulation when supporting IR HARQ

Data block size (bytes)	N	P_0	P_1	P_2	P_3
6	24	5	0	0	0
12	48	13	24	0	24
18	72	11	6	0	6
24	96	7	48	24	72
36	144	17	74	72	2
48	192	11	96	48	144
60	240	13	120	60	180
120	480	53	62	12	2
240	960	43	64	300	824
360	1440	43	720	360	540
480	1920	31	8	24	16
600	2400	53	66	24	2

case 0: $P(j) = (P_0 \cdot j + 1) \bmod N$

case 1: $P(j) = (P_0 \cdot j + 1 + N/2 + P_1) \bmod N$

case 2: $P(j) = (P_0 \cdot j + 1 + P_2) \bmod N$

case 3: $P(j) = (P_0 \cdot j + 1 + N/2 + P_3) \bmod N$

This step gives a sequence $u_2 = [u_1(P(0)), u_1(P(1)), u_1(P(2)), u_1(P(3)), ...,u_1(P(N–1))] = [(B_{P(0)}, A_{P(0)}), (A_{P(1)}, B_{P(1)}), (B_{P(2)}, A_{P(2)}), (A_{P(3)}, B_{P(3)}), \ldots, (A_{P(N-1)}, B_{P(N-1)})]$. Sequence u_2 is the input to the second encoding C_2.

8.4.9.2.3.3 Determination of CTC circulation states

The state of the encoder is denoted S ($0 \le S \le 7$) with $S = 4s_1 + 2s_2 + s_3$ (see Figure 289). The circulation states Sc_1 and Sc_2 are determined by the following operations:

a) Initialize the encoder with state 0. Encode the sequence in the natural order for the determination of Sc_1 or in the interleaved order for determination of Sc_2. In both cases the final state of the encoder is $S0_{N-1}$;

b) According to the length N of the sequence, use Table 504 to find Sc_1 or Sc_2.

8.4.9.2.3.4 Subpacket generation

Proposed FEC structure punctures the mother codeword to generate a subpacket with various coding rates. The subpacket is also used as HARQ packet transmission. Figure 290 shows a block diagram of subpacket generation. 1/3 CTC encoded codeword goes through interleaving block and the puncturing is performed. Figure 291 shows block diagram of the interleaving block. The puncturing is performed to select the consecutive interleaved bit sequence that starts at any point of whole codeword. For the first transmission, the subpacket is generated to select the consecutive interleaved bit sequence that starts from the first bit of the systematic part of the mother codeword. The length of the subpacket is chosen according to the needed

Table 504—Circulation state lookup table (*Sc*)

N_{mod_7}	$S0_{N-1}$							
	0	**1**	**2**	**3**	**4**	**5**	**6**	**7**
1	0	6	4	2	7	1	3	5
2	0	3	7	4	5	6	2	1
3	0	5	3	6	2	7	1	4
4	0	4	1	5	6	2	7	3
5	0	2	5	7	1	3	4	6
6	0	7	6	1	3	4	5	2

coding rate reflecting the channel condition. The first subpacket can also be used as a codeword with the needed coding rate for a burst where HARQ is not applied.

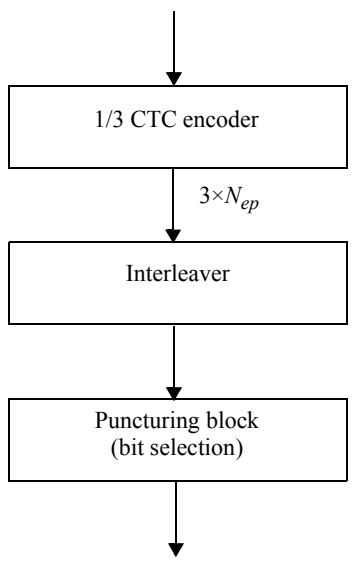

Figure 290—Block diagram of subpacket generation

8.4.9.2.3.4.1 Bit separation

All of the encoded bits shall be demultiplexed into six subblocks denoted A, B, Y_1, Y_2, W_1, and W_2. The encoder output bits shall be sequentially distributed into six subblocks with the first N encoder output bits going to the A subblock, the second N encoder output going to the B subblock, the third N to the Y_1 subblock, the fourth N to the Y_2 subblock, the fifth N to the W_1 subblock, and the sixth N to the W_2 subblock.

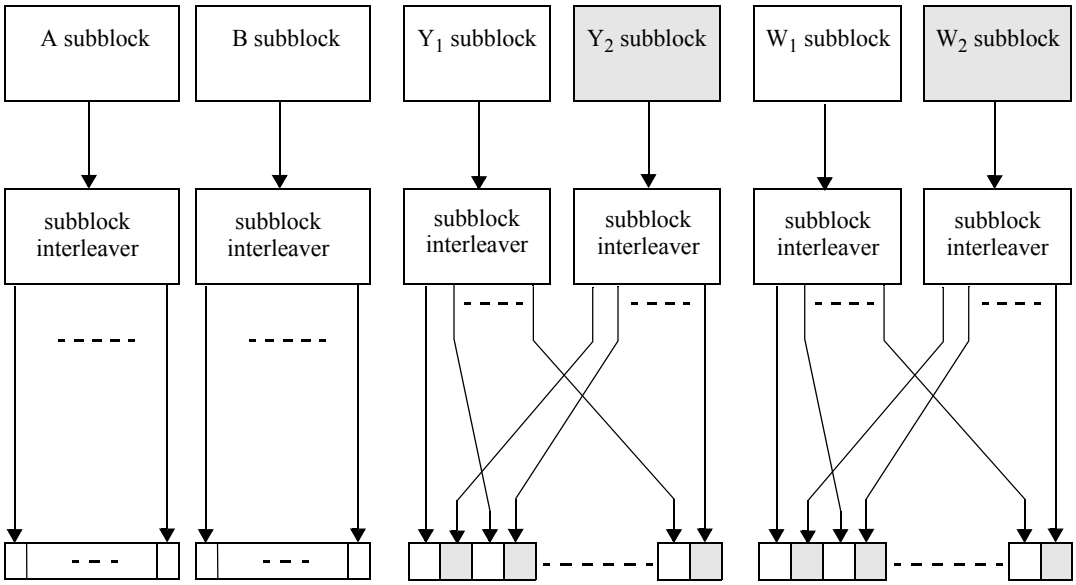

Figure 291—Block diagram of the interleaving scheme

8.4.9.2.3.4.2 Subblock interleaving

The six subblocks shall be interleaved separately. The interleaving is performed by the unit of bits. The sequence of interleaver output bits for each subblock shall be generated by the procedure described below. The entire subblock of bits to be interleaved is written into an array at addresses from 0 to the number of the bits minus one (N – 1), and the interleaved bits are read out in a permuted order with the i-th bit being read from an address, AD_i (i = 0... N – 1), as follows:

a) Determine the subblock interleaver parameters, m and J . Table 505 gives these parameters.

b) Initialize i and k to 0.

c) Form a tentative output address T_k according to the following formula:
$T_k = 2^m(k \bmod J) + BRO_m(\lfloor k/J \rfloor)$
where $BRO_m(y)$ indicates the bit-reversed m-bit value of y (i.e., $\mathrm{BRO}_3(6) = 3$).

d) If T_k is less than N $AD_i = T_k$ and increment i and k by 1. Otherwise, discard T_k and increment k only.

e) Repeat steps 3) and 4) until all N interleaver output addresses are obtained.

The parameters for the subblock interleavers are specified in Table 505, and the parameters for the subblock interleavers when supporting HARQ are specified in Table 506.

8.4.9.2.3.4.3 Bit grouping

The channel interleaver output sequence shall consist of the interleaved A and B subblock sequence, followed by a bit-by-bit multiplexed sequence of the interleaved Y_1 and Y_2 subblock sequences, followed by a bit-by-bit multiplexed sequence of the interleaved W_1 and W_2 subblock sequences. The bit-by-bit multiplexed sequence of interleaved Y_1 and Y_2 subblock sequences shall consist of the first output bit from the Y_1 subblock interleaver, the first output bit from the Y_2 subblock interleaver, the second output bit from the Y_1 subblock interleaver, the second output bit from the Y_2 subblock interleaver, etc. The bit-by-bit multiplexed sequence of interleaved W_1 and W_2 subblock sequences shall consist of the first output bit from the W_1 subblock interleaver, the first output bit from the W_2 subblock interleaver, the second output bit from

Table 505—Parameters for the subblock interleavers

Block size (bits) N_{EP}	N	Subblock interleaver parameters	
		m	J
48	24	3	3
72	36	4	3
96	48	4	3
144	72	5	3
192	96	5	3
216	108	5	4
240	120	6	2
288	144	6	3
360	180	6	3
384	192	6	3
432	216	6	4
480	240	7	2

Table 506—Parameters for the subblock interleavers when supporting HARQ

Block size (bits) N_{EP}	N	Subblock interleaver parameters	
		m	J
48	24	3	3
96	48	4	3
144	72	5	3
192	96	5	3
288	144	6	3
384	192	6	3
480	240	7	2
960	480	8	2
1920	960	9	2
2880	1440	9	3
3840	1920	10	2
4800	2400	10	3

the W_1 subblock interleaver, the second output bit from the W_2 subblock interleaver, etc. Figure 291 shows the interleaving scheme.

8.4.9.2.3.4.4 Bit selection

Lastly, bit selection is performed to generate the subpacket. The puncturing block is referred as bits selection in the viewpoint of subpacket generation.

Mother code is transmitted with one of the subpackets. The bits in a subpacket are formed by selecting specific sequences of bits from the interleaved CTC encoder output sequence. The resulting subpacket sequence is a binary sequence of bits for the modulator.

Let

- k be the subpacket index when IR HARQ is enabled. $k = 0$ for the first transmission and increases by one for the next subpacket. $k = 0$ when IR HARQ is not used. When there are more than one FEC block in a burst, the subpacket index for each FEC block shall be the same.
- N_{EP} be the number of bits in the encoder packet (before encoding).
- N_{SCHk} be the number of the concatenated slots for the subpacket defined in Table 500 for the non-HARQ and Chase HARQ CTC scheme defined in 8.4.9.2.3.1 and be the same as the N_{sch} that is indicated in the Allocation IE for the HARQ CTC scheme defined in 8.4.9.2.3.5.
- m_k be the modulation order for the k-th subpacket (m_k = 2 for QPSK, 4 for 16-QAM, and 6 for 64-QAM).
- $SPID_k$ be the subpacket ID for the k-th subpacket, (for the first subpacket, $\mathrm{SPID}_{k=0} = 0$).

Also, let the scrambled and selected bits be numbered from zero with the 0-th bit being the first bit in the sequence. Then, the index of the i-th bit for the k-th subpacket shall be as shown in Equation (117).

$$S_{k,i} = (F_k + i) mod (3 \times N_{EP}) \tag{117}$$

where

$i = 0 \ldots L_k\text{-}1,$

$L_k = 48 \cdot N_{SCHk} \cdot m_k,$

$F_k = (SPID_k \cdot L_k) mod (3 \cdot N_{EP}).$

The N_{EP}, N_{SCHk}, m_k, and $SPID$ values are determined by the BS and can be inferred by the SS through the allocation size in the DL-MAP and UL-MAP. The above bit selection makes the following possible:

a) The first transmission includes the systematic part of the mother code. Thus, it can be used as the codeword for a burst where the HARQ is not applied or when Chase HARQ is applied.

b) The location of the subpacket can be determined by the SPID itself without the knowledge of previous subpacket. It is very important property for IR HARQ retransmission.

8.4.9.2.3.5 Optional IR HARQ support

The procedure of IR-HARQ CTC subpacket generation is as follows: padding, CRC addition, fragmentation, randomization, and CTC encoding. IR-HARQ implementation is optional. The randomization block in 8.4.9.1, the concatenation scheme in 8.4.9.2.3.1, and the interleaving in 8.4.9.3 shall not be applied for the encoding described in this subclause.

8.4.9.2.3.5.1 Padding

MAC PDU (or concatenated MAC PDUs) is a basic unit processed in this channel coding and modulation blocks. When the size of MAC PDU (or concatenated MAC PDUs) is not the element in the allowed set for HARQ, ones are padded at the end of MAC PDU (or concatenated MAC PDUs). The amount of the padding is the same as the difference between the size of the PDU (or concatenated MAC PDUs) and the smallest element in the allowed set that is not less than the size of the PDU (or concatenated MAC PDUs). The padded packet is input into the CRC encoding block.

The allowed set is {32, 80, 128, 176, 272, 368, 464, 944, 1904, 2864, 3824, 4784, 9584, 14384, 19184, 23984} bits.

8.4.9.2.3.5.2 CRC encoding

When HARQ is applied to a packet, error detection is provided on the padded packet through a Cyclic Redundancy Check (CRC).

The size of the CRC is 16 bits. CRC16-CCITT, as defined in ITU-T Recommendation X.25, shall be included at the end of the padded packet. The CRC covers both the padded bits and the information part of the padded packet. After the CRC operation, the packet size shall belong to set {48, 96, 144, 192, 288, 384, 480, 960, 1920, 2880, 3840, 4800, 9600, 14400, 19200, 24000}.

8.4.9.2.3.5.3 Fragmentation

When the size after the padding and CRC encoding is $n \times 4800$ bits they are separately encoded by the block of 4800 bits and concatenated as the same order of the separation before modulation. No operation is performed for the packet whose size after the padding and CRC encoding is not more than 4800 bits. The bits output from the fragmentation block are denoted by $r_1, r_2, \ldots, r_{N_{EP}}$, and this sequence is defined as encoder packet. N_{EP} is the number of the bits in an encoder packet and defined as encoder packet size. The values of N_{EP} are 48, 96, 144, 192, 288, 384, 480, 960, 1920, 2880, 3840, 4800.

8.4.9.2.3.5.4 Randomization

The randomization is performed on each encoder packet; in other words, for each encoder packet, the randomizer shall be initialized independently.

The PRBS generator shall be $1 + X^{14} + X^{15}$ as shown in Figure 292. Each data byte to be transmitted shall enter sequentially into the randomizer, MSB first. Preambles are not randomized. The seed value shall be

used to calculate the randomization bits, which are combined in an XOR operation with the serialized bit stream of each FEC block.

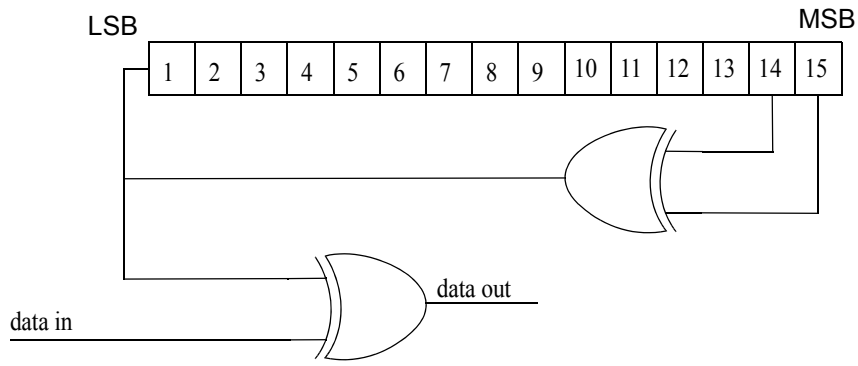

Figure 292—PRBS generator of the randomization

The scrambler is initialized with the vector [LSB] 0 1 1 0 1 1 1 0 0 0 1 0 1 0 1 [MSB].

8.4.9.2.3.5.5 CTC encoding and subpacket generation

The CTC encoding and subpacket generation is the same as the operation described in 8.4.9.2.3.1, 8.4.9.2.3.2, 8.4.9.2.3.3, and 8.4.9.2.3.4.

8.4.9.2.3.5.6 Modulation order of DL traffic burst

For DL, the modulation order (2 for QPSK, 4 for 16-QAM, and 6 for 64-QAM) shall be set for all the allowed transmission formats as shown in Table 507. The transmission format is given by the N_{EP} (encoding packet size) and the N_{SCH} (number of allotted slots). N_{EP} per an encoding packet is {144, 192, 288, 384, 480, 960, 1920, 2880, 3840, 4800}. The N_{SCH} per an encoding packet is {1, ..., 480}. In Table 507, the numbers in the first row are N_{EP}s, and the numbers in the remaining rows are N_{SCH}s and related parameters. In Table 507, the modulation order is denoted by *MOD*, and it has the values of 2 for QPSK, 4 for 16-QAM, and 6 for 64-QAM. *SCH* denotes for the number of allocated slots.

The supportable modulation schemes are QPSK, 16-QAM, and 64-QAM. When the N_{EP} and the N_{SCH} are given, the modulation order is determined by the value of *MPR* (Modulation order Product code Rate). The *MPR* means the effective number of the information bit transmitted per a subcarrier and is defined by Equation (118).

$$MPR = \frac{N_{EP}}{48 \times N_{SCH}} \tag{118}$$

Then, the modulation order is specified by the following rules:

— If $0 < MPR < 1.5$, then a QPSK (modulation order 2) is used.
— If $1.5 \le MPR < 3.0$, then a 16-QAM (modulation order 4) is used.
— If $3.0 \le MPR < 5.4$, then a 64-QAM (modulation order 6) is used.

The effective code rate is equal to MPR divided by the modulation order (i.e., 2 for QPSK).

The information of N_{EP} and N_{SCH} shall be signaled in HARQ MAP. Instead of the actual values of N_{EP} and N_{SCH}, the encoded value of N_{EP} (N_{EP} code) and N_{SCH} (N_{SCH} code) shall be used for the signaling. They are

encoded by 4 bits, respectively. The encoding of N_{EP} (N_{EP} code) is shown in Table 508. The encoding of N_{SCH} (N_{SCH} code) is performed per N_{EP} value. For each N_{EP}, there are fewer than 16 kinds of N_{SCH} values, and they are encoded from 0 (the smallest number of slots) to 15 in increasing order. When the number of N_{SCH} values for a N_{EP} is smaller than 16, the smallest number of the smallest codes is used. When the fragmentation is applied and the number of the subpackets for an allocation is n, $n \times N_{EP}$ and N_{SCH} (the number of slots allocated for a subpacket) should be signaled.

Table 507—Transmission format and modulation level for DL

N_{EP}	144	192	288	384	480	960	1920	2880	3840	4800
Sch	1.00	1.00								
MPR	3.00	4.00								
MOD	6.00	6.00								
Rate	1/2	2/3								
Rate	0.50	0.67								
Sch	2.00	2.00	2.00	2.00	2.00					
MPR	1.50	2.00	3.00	4.00	5.00					
MOD	4.00	4.00	6.00	6.00	6.00					
Rate	3/8	1/2	1/2	2/3	5/6					
Rate	0.38	0.50	0.50	0.67	0.83					
Sch	3.00	3.00	3.00	3.00	3.00					
MPR	1.00	1.33	2.00	2.67	3.33					
MOD	2.00	2.00	4.00	4.00	6.00					
Rate	1/2	2/3	1/2	2/3	5/9					
Rate	0.50	0.67	0.50	0.67	0.56					
Sch		4.00	4.00	4.00	4.00	4.00				
MPR		1.00	1.50	2.00	2.50	5.00				
MOD		2.00	4.00	4.00	4.00	6.00				
Rate		1/2	3/8	1/2	5/8	5/6				
Rate		0.50	0.38	0.50	0.63	0.83				
Sch	5.00		5.00	5.00	5.00	5.00				
MPR	0.60		1.20	1.60	2.00	4.00				
MOD	2.00		2.00	4.00	4.00	6.00				
Rate	3/10		3/5	2/5	1/2	2/3				
Rate	0.30		0.60	0.40	0.50	0.67				
Sch	6.00	6.00	6.00	6.00	6.00	6.00				
MPR	0.50	0.67	1.00	1.33	1.67	3.33				
MOD	2.00	2.00	2.00	2.00	4.00	6.00				
Rate	1/4	1/3	1/2	2/3	5/12	5/9				
Rate	0.25	0.33	0.50	0.67	0.42	0.56				
Sch		8.00		8.00	8.00	8.00	8.00			
MPR		0.50		1.00	1.25	2.50	5.00			
MOD		2.00		2.00	2.00	4.00	6.00			
Rate		1/4		1/2	5/8	5/8	5/6			
Rate		0.25		0.50	0.63	0.63	0.83			
Sch	9.00		9.00				9.00			
MPR	0.33		0.67				4.44			
MOD	2.00		2.00				6.00			
Rate	1/6		1/3				20/27			
Rate	0.17		0.33				0.74			

Table 507—Transmission format and modulation level for DL *(continued)*

N_{EP}	144	192	288	384	480	960	1920	2880	3840	4800
Sch *MPR* *MOD* Rate Rate					10.00 1.00 2.00 1/2 0.50	10.00 2.00 4.00 1/2 0.50	10.00 4.00 6.00 2/3 0.67			
Sch *MPR* *MOD* Rate Rate	12.00 0.25 2.00 1/8 0.13	12.00 0.33 2.00 1/6 0.17	12.00 0.50 2.00 1/4 0.25	12.00 0.67 2.00 1/3 0.33				12.00 5.00 6.00 5/6 0.83		
Sch *MPR* *MOD* Rate Rate						13.00 1.54 4.00 5/13 0.38	13.00 3.08 6.00 20/39 0.51	13.00 4.62 6.00 10/13 0.77		
Sch *MPR* *MOD* Rate Rate					15.00 0.67 2.00 1/3 0.33	15.00 1.33 2.00 2/3 0.67	15.00 2.67 4.00 2/3 0.67	15.00 4.00 6.00 2/3 0.67		
Sch *MPR* *MOD* Rate Rate		16.00 0.25 2.00 1/8 0.13		16.00 0.50 2.00 1/4 0.25					16.00 5.00 6.00 5/6 0.83	
Sch *MPR* *MOD* Rate Rate	18.00 0.17 2.00 1/12 0.08		18.00 0.33 2.00 1/6 0.17						18.00 4.44 6.00 20/27 0.74	
Sch *MPR* *MOD* Rate Rate					20.00 0.50 2.00 1/4 0.25	20.00 1.00 2.00 1/2 0.50	20.00 2.00 4.00 1/2 0.50	20.00 3.00 6.00 1/2 0.50	20.00 4.00 6.00 2/3 0.67	20.00 5.00 6.00 5/6 0.83
Sch *MPR* *MOD* Rate Rate								22.00 2.73 4.00 15/22 0.68		22.00 4.55 6.00 25/33 0.76
Sch *MPR* *MOD* Rate Rate		24.00 0.17 2.00 1/12 0.08	24.00 0.25 2.00 1/8 0.13	24.00 0.33 2.00 1/6 0.17						
Sch *MPR* *MOD* Rate Rate							26.00 1.54 4.00 5/13 0.38		26.00 3.08 6.00 20/39 0.51	26.00 3.85 6.00 25/39 0.64

Table 507—Transmission format and modulation level for DL *(continued)*

N_{EP}	144	192	288	384	480	960	1920	2880	3840	4800
Sch *MPR* *MOD* Rate Rate					30.00 0.33 2.00 1/6 0.17	30.00 0.67 2.00 1/3 0.33	30.00 1.33 2.00 2/3 0.67	30.00 2.00 4.00 1/2 0.50	30.00 2.67 4.00 2/3 0.67	
Sch *MPR* *MOD* Rate Rate				32.00 0.25 2.00 1/8 0.13						32.00 3.13 6.00 25/48 0.52
Sch *MPR* *MOD* Rate Rate			36.00 0.17 2.00 1/12 0.08							
Sch *MPR* *MOD* Rate Rate										38.00 2.63 4.00 25/38 0.66
Sch *MPR* *MOD* Rate Rate					40.00 0.25 2.00 1/8 0.13	40.00 0.50 2.00 1/4 0.25	40.00 1.00 2.00 1/2 0.50	40.00 1.50 4.00 3/8 0.38	40.00 2.00 4.00 1/2 0.50	
Sch *MPR* *MOD* Rate Rate								44.00 1.36 2.00 15/22 0.68		
Sch *MPR* *MOD* Rate Rate				48.00 0.17 2.00 1/12 0.08						
Sch *MPR* *MOD* Rate Rate										50.00 2.00 4.00 1/2 0.50
Sch *MPR* *MOD* Rate Rate									52.00 1.54 4.00 5/13 0.38	
Sch *MPR* *MOD* Rate Rate					60.00 0.17 2.00 1/12 0.08	60.00 0.33 2.00 1/6 0.17	60.00 0.67 2.00 1/3 0.33	60.00 1.00 2.00 1/2 0.50	60.00 1.33 2.00 2/3 0.67	

Table 507—Transmission format and modulation level for DL *(continued)*

N_{EP}	144	192	288	384	480	960	1920	2880	3840	4800
Sch *MPR* *MOD* Rate Rate										64.00 1.56 4.00 25/64 0.39
Sch *MPR* *MOD* Rate Rate										76.00 1.32 2.00 25/38 0.66
Sch *MPR* *MOD* Rate Rate						80.00 0.25 2.00 1/8 0.13	80.00 0.50 2.00 1/4 0.25		80.00 1.00 2.00 1/2 0.50	
Sch *MPR* *MOD* Rate Rate								90.00 0.67 2.00 1/3 0.33		
Sch *MPR* *MOD* Rate Rate										100.00 1.00 2.00 1/2 0.50
Sch *MPR* *MOD* Rate Rate						120.00 0.17 2.00 1/12 0.08	120.00 0.33 2.00 1/6 0.17	120.00 0.50 2.00 1/4 0.25	120.00 0.67 2.00 1/3 0.33	
Sch *MPR* *MOD* Rate Rate										150.00 0.67 2.00 1/3 0.33
Sch *MPR* *MOD* Rate Rate							160.00 0.25 2.00 1/8 0.13		160.00 0.50 2.00 1/4 0.25	
Sch *MPR* *MOD* Rate Rate								180.00 0.33 2.00 1/6 0.17		
Sch *MPR* *MOD* Rate Rate										200.00 0.50 2.00 1/4 0.25

Table 507—Transmission format and modulation level for DL *(continued)*

N_{EP}	144	192	288	384	480	960	1920	2880	3840	4800
Sch *MPR* *MOD* Rate Rate							240.00 0.17 2.00 1/12 0.08	240.00 0.25 2.00 1/8 0.13	240.00 0.33 2.00 1/6 0.17	
Sch *MPR* *MOD* Rate Rate										300.00 0.33 2.00 1/6 0.17
Sch *MPR* *MOD* Rate Rate									320.00 0.25 2.00 1/8 0.13	
Sch *MPR* *MOD* Rate Rate								360.00 0.17 2.00 1/12 0.08		
Sch *MPR* *MOD* Rate Rate										400.00 0.25 2.00 1/8 0.13
Sch *MPR* *MOD* Rate Rate									480.00 0.17 2.00 1/12 0.08	

NOTE—In Table 507, the first rate entry is the theoretical rate, and the second rate entry is an approximated rate.

The encoding for $n \times N_{EP}$ (N_{EP} code) is also shown in Table 508. The encoded value of N_{SCH} (N_{SCH} code) should be interpreted as N_{SCH} for a subpacket and $n \times N_{SCH}$ for the whole allocation.

Table 508—N_{EP} encoding

N_{EP}	48	96	144	192	288	384	480	960	1920	2880	3840	4800	9600	14400	19200	24000
Encoding	0	1	2	3	4	5	6	7	8	9	10	11	12	13	14	15

8.4.9.2.3.5.7 Modulation order of UL traffic burst

For UL, the modulation order (2 for QPSK and 4 for 16-QAM) shall be set for all the allowed transmission formats as shown in Table 509. The transmission format is given by the N_{EP} (encoding packet size) and the

N_{SCH} (number of allocated slots). N_{EP} per an encoding packet is {48, 96, 144, 192, 288, 384, 480, 960, 1920, 2880, 3840, 4800}. The N_{SCH} per an encoding packet is {1...240}. In Table 509, the numbers in the first row are N_{EP}s, and the numbers in the remaining rows are N_{SCH}s and related parameters. In Table 509, the modulation order is denoted by MOD, and it has the values of two for QPSK, four for 16-QAM. *SCH* denotes for the number of allocated slots.

The supportable modulation schemes are QPSK and 16-QAM. When the N_{EP} and the N_{SCH} are given, the modulation order is determined by the value of *MPR*. The *MPR* means the effective number of the information bit transmitted per subcarrier and is defined by Equation (119).

$$MPR = \frac{N_{EP}}{48 \times N_{SCH}} \tag{119}$$

Then, the modulation order is specified by the following rules:

— If $0 < MPR < 1.5$, then a QPSK (modulation order 2) is used.
— If $1.5 \leq MPR < 3.4$, then a 16-QAM (modulation order 4) is used.

The effective code rate is equal to *MPR* divided by the modulation order (i.e., 2 for QPSK).

The information of N_{EP} and N_{SCH} shall be signaled in HARQ MAP. Instead of the actual values of N_{EP} and N_{SCH}, the encoded value of N_{EP} (N_{EP} code) and N_{SCH} (N_{SCH} code) shall be used for the signaling. They are encoded by 4 bits, respectively. The encoding of N_{EP} (N_{EP} code) is shown in Table 508. The encoding of N_{SCH} (N_{SCH} code) is performed per N_{EP} value. For each N_{EP}, there are fewer than 16 kinds of N_{SCH} values, and they are encoded from 0 (the smallest number of slots) to 15 in increasing order. When the number of N_{SCH} values for a N_{EP} is smaller than 16, then the corresponding number of codes is used. When the fragmentation is applied and the number of the subpackets for an allocation is n, $n \times N_{EP}$, and N_{SCH} (the number of slots allocated for a subpacket) should be signaled.

The encoding for $n \times N_{EP}$ (N_{EP} code) is also shown in Table 508. The encoded value of N_{SCH} (N_{SCH} code) should be interpreted as N_{SCH} for a subpacket and $n \times N_{SCH}$ for the whole allocation.

Table 509—Transmission format and modulation level for UL

N_{EP}	48	96	144	192	288	384	480	960	1920	2880	3840	4800
Sch	1.00	1.00	1.00									
MPR	1.00	2.00	3.00									
MOD	2.00	4.00	4.00									
Rate	1/2	1/2	3/4									
Rate	0.50	0.50	0.75									
Sch	2.00	2.00	2.00	2.00	2.00							
MPR	0.50	1.00	1.50	2.00	3.00							
MOD	2.00	2.00	4.00	4.00	4.00							
Rate	1/4	1/2	3/8	1/2	3/4							
Rate	0.25	0.5	0.38	0.50	0.75							
Sch	3.00	3.00	3.00	3.00	3.00	3.00	3.00					
MPR	0.33	0.67	1.00	1.33	2.00	2.67	3.33					
MOD	2.00	2.00	2.00	2.00	4.00	4.00	4.00					
Rate	1/6	1/3	1/2	2/3	1/2	2/3	5/6					
Rate	0.17	0.33	0.50	0.67	0.5	0.67	0.83					

Table 509—Transmission format and modulation level for UL *(continued)*

N_{EP}	48	96	144	192	288	384	480	960	1920	2880	3840	4800
Sch *MPR* *MOD* Rate Rate	4.00 0.25 2.00 1/8 0.13	4.00 0.50 2.00 1/4 0.25		4.00 1.00 2.00 1/2 0.50	4.00 1.50 4.00 3/8 0.38	4.00 2.00 4.00 1/2 0.50	4.00 2.50 4.00 5/8 0.63					
Sch *MPR* *MOD* Rate Rate			5.00 0.60 2.00 3/10 0.30		5.00 1.20 2.00 3/5 0.60	5.00 1.60 4.00 2/5 0.40	5.00 2.00 4.00 1/2 0.50					
Sch *MPR* *MOD* Rate Rate	6.00 0.17 2.00 1/12 0.08	6.00 0.33 2.00 1/6 0.17	6.00 0.50 2.00 1/4 0.25	6.00 0.67 2.00 1/3 0.33	6.00 1.00 2.00 1/2 0.50	6.00 1.33 2.00 2/3 0.67	6.00 1.67 4.00 5/12 0.42	6.00 3.33 4.00 5/6 0.83				
Sch *MPR* *MOD* Rate Rate								7.00 2.86 4.00 5/7 0.714				
Sch *MPR* *MOD* Rate Rate		8.00 0.25 2.00 1/8 0.13		8.00 0.50 2.00 1/4 0.25		8.00 1.00 2.00 1/2 0.50	8.00 1.25 2.00 5/8 0.63	8.00 2.50 4.00 5/8 0.63				
Sch *MPR* *MOD* Rate Rate			9.00 0.33 2.00 1/6 0.17		9.00 0.67 2.00 1/3 0.33							
Sch *MPR* *MOD* Rate Rate							10.00 1.00 2.00 1/2 0.50	10.00 2.00 4.00 1/2 0.50				
Sch *MPR* *MOD* Rate Rate		12.0 0.17 2.0 1/12 0.08	12.00 0.25 2.00 1/8 0.13	12.0 0.33 2.00 1/6 0.17	12.0 0.50 2.00 1/4 0.25	12.0 0.67 2.00 1/3 0.33			12.00 3.33 4.00 5/6 0.83			
Sch *MPR* *MOD* Rate Rate									13.00 3.08 4.00 10/13 0.77			
Sch *MPR* *MOD* Rate Rate							15.00 0.67 2.00 1/3 0.33	15.00 1.33 2.00 2/3 0.67	15.00 2.67 4.00 2/3 0.67			

Table 509—Transmission format and modulation level for UL *(continued)*

N_{EP}	48	96	144	192	288	384	480	960	1920	2880	3840	4800
Sch *MPR* *MOD* Rate Rate				16.0 0.25 2.00 1/8 0.13		16.0 0.50 2.00 1/4 0.25						
Sch *MPR* *MOD* Rate Rate			18.00 0.17 2.00 1/12 0.08		18.0 0.33 2.00 1/6 0.17					18.00 3.33 4.00 5/6 0.83		
Sch *MPR* *MOD* Rate Rate							20.00 0.50 2.00 1/4 0.25	20.00 1.00 2.00 1/2 0.50	20.00 2.00 4.00 1/2 0.50	20.00 3.00 4.00 3/4 0.75		
Sch *MPR* *MOD* Rate Rate				24.0 0.17 2.00 1/12 0.08	24.0 0.25 2.00 1/8 0.13	24.0 0.33 2.00 1/6 0.17				24.00 2.50 4.00 5/8 0.63	24.00 3.33 4.00 5/6 0.83	
Sch *MPR* *MOD* Rate Rate									26.00 1.54 4.00 5/13 0.38		26.00 3.08 4.00 10/13 0.77	
Sch *MPR* *MOD* Rate Rate							30.00 0.33 2.00 1/6 0.17	30.00 0.67 2.00 1/3 0.33	30.00 1.33 2.00 2/3 0.67	30.00 2.00 4.00 1/2 0.50	30.00 2.67 4.00 2/3 0.67	30.0 3.33 4.00 5/6 0.83
Sch *MPR* *MOD* Rate Rate						32.0 0.25 2.00 1/8 0.13						
Sch *MPR* *MOD* Rate Rate												34.00 2.94 4.00 25/34 0.74
Sch *MPR* *MOD* Rate Rate					36.0 0.17 2.00 1/12 0.08							
Sch *MPR* *MOD* Rate Rate												38.00 2.63 4.00 25/38 0.66

Table 509—Transmission format and modulation level for UL *(continued)*

N_{EP}	48	96	144	192	288	384	480	960	1920	2880	3840	4800
Sch *MPR* *MOD* Rate Rate							40.00 0.25 2.00 1/8 0.13	40.00 0.50 2.00 1/4 0.25	40.00 1.00 2.00 1/2 0.50	40.00 1.50 4.00 3/8 0.38	40.00 2.00 4.00 1/2 0.50	
Sch *MPR* *MOD* Rate Rate										45.00 1.33 2.00 2/3 0.67		
Sch *MPR* *MOD* Rate Rate						48.0 0.17 2.00 1/12 0.08						
Sch *MPR* *MOD* Rate Rate												50.00 2.00 4.00 1/2 0.50
Sch *MPR* *MOD* Rate Rate											52.00 1.54 4.00 5/13 0.38	
Sch *MPR* *MOD* Rate Rate							60.00 0.17 2.00 1/12 0.08	60.00 0.33 2.00 1/6 0.17	60.00 0.67 2.00 1/3 0.33	60.00 1.00 2.00 1/2 0.50	60.00 1.33 2.00 2/3 0.67	
Sch *MPR* *MOD* Rate Rate												66.00 1.52 4.00 25/66 0.38
Sch *MPR* *MOD* Rate Rate												76.00 1.32 2.00 25/38 0.66
Sch *MPR* *MOD* Rate Rate								80.00 0.25 2.00 1/8 0.13	80.00 0.50 2.00 1/4 0.25		80.00 1.00 2.00 1/2 0.50	
Sch *MPR* *MOD* Rate Rate										90.00 0.67 2.00 1/3 0.33		

Table 509—Transmission format and modulation level for UL *(continued)*

N_{EP}	48	96	144	192	288	384	480	960	1920	2880	3840	4800
Sch *MPR* *MOD* Rate Rate												100.00 1.00 2.00 1/2 0.50
Sch *MPR* *MOD* Rate Rate								120.0 0.17 2.00 1/12 0.08	120.00 0.33 2.00 1/6 0.17	120.00 0.50 2.00 1/4 0.25	120.00 0.67 2.00 1/3 0.33	
Sch *MPR* *MOD* Rate Rate												150.00 0.67 2.00 1/3 0.33
Sch *MPR* *MOD* Rate Rate									160.00 0.25 2.00 1/8 0.13		160.00 0.50 2.00 1/4 0.25	
Sch *MPR* *MOD* Rate Rate										180.00 0.33 2.00 1/6 0.17		
Sch *MPR* *MOD* Rate Rate												200.00 0.50 2.00 1/4 0.25
Sch *MPR* *MOD* Rate Rate									240.00 0.17 2.00 1/12 0.08	240.00 0.25 2.00 1/8 0.13	240.00 0.33 2.00 1/6 0.17	

NOTE—In Table 509, the first rate entry is the theoretical rate, and the second rate entry is an approximated rate.

8.4.9.2.4 Zero tailed convolutional coding (optional)

The convolutional encoder (as described in 8.4.9.2.1) may employ the Zero Tailing technique. In this case, a single 0x00 tail byte is appended at the end of each burst. This tail byte shall be appended after randomization. The convolutional code and the puncturing shall be applied to the whole burst without partitioning it into blocks. The interleaving shall be applied to the coded bits in blocks of size described in 8.4.9.2.

8.4.9.2.5 Low density parity check (LDPC) code (optional)

8.4.9.2.5.1 Code description

The LDPC code is based on a set of one or more fundamental LDPC codes. Each of the fundamental codes is a systematic linear block code. Using the described methods in 8.4.9.2.5.2 Code Rate and Block Size Adjustment, the fundamental codes can accommodate various code rates and packet sizes.

Each LDPC code in the set of LDPC codes is defined by a matrix **H** of size *m*-by-*n*, where *n* is the length of the code and *m* is the number of parity check bits in the code. The number of systematic bits is $k = n - m$.

The matrix **H** is defined as follows:

$$\mathbf{H} = \begin{bmatrix} \mathbf{P}_{0,0} & \mathbf{P}_{0,1} & \mathbf{P}_{0,2} & \cdots & \mathbf{P}_{0,n_b-2} & \mathbf{P}_{0,n_b-1} \\ \mathbf{P}_{1,0} & \mathbf{P}_{1,1} & \mathbf{P}_{1,2} & \cdots & \mathbf{P}_{1,n_b-2} & \mathbf{P}_{1,n_b-1} \\ \mathbf{P}_{2,0} & \mathbf{P}_{2,1} & \mathbf{P}_{2,2} & \cdots & \mathbf{P}_{2,n_b-2} & \mathbf{P}_{0,n_b-1} \\ \cdots & \cdots & \cdots & \cdots & \cdots & \cdots \\ \mathbf{P}_{m_b-1,0} & \mathbf{P}_{m_b-1,1} & \mathbf{P}_{m_b-1,2} & \cdots & \mathbf{P}_{m_b-1,n_b-2} & \mathbf{P}_{m_b-1,n_b-1} \end{bmatrix} = \mathbf{P}^{H_b}$$

where $\mathbf{P}_{i,j}$ is one of a set of *z*-by-*z* permutation matrices or a *z*-by-*z* zero matrix. The matrix **H** is expanded from a binary base matrix $\mathbf{H}_b$ of size m_b-by-n_b, where $n = z \times n_b$ and $m = z \times m_b$,with *z* an integer ≥ 1. The base matrix is expanded by replacing each 1 in the base matrix with a *z*-by-*z* permutation matrix, and each 0 with a *z*-by-*z* zero matrix. The base matrix size n_b is an integer equal to 24.

The permutations used are circular right shifts, and the set of permutation matrices contains the *z*×*z* identity matrix and circular right shifted versions of the identity matrix. Because each permutation matrix is specified by a single circular right shift, the binary base matrix information and permutation replacement information can be combined into a single compact model matrix $\mathbf{H}_{bm}$. The model matrix $\mathbf{H}_{bm}$ is the same size as the binary base matrix $\mathbf{H}_b$, with each binary entry(*i*,*j*) of the base matrix $\mathbf{H}_b$ replaced to create the model matrix $\mathbf{H}_{bm}$. Each 0 in $\mathbf{H}_b$ is replaced by a blank or negative value (e.g., by –1) to denote a *z*×*z* all-zero matrix, and each 1 in $\mathbf{H}_b$ is replaced by a circular shift size $p(i,j) \geq 0$. The model matrix $\mathbf{H}_{bm}$ can then be directly expanded to **H**.

$\mathbf{H}_b$ is partitioned into two sections, where $\mathbf{H}_{b1}$ corresponds to the systematic bits and $\mathbf{H}_{b2}$ corresponds to the parity-check bits, so that $H_b = \left\lfloor (H_{b1})_{m_b \times k_b} \middle| (H_{b2})_{m_b \times m_b} \right\rfloor$.

Section $\mathbf{H}_{b2}$ is further partitioned into two sections, where vector $\mathbf{h}_b$ has odd weight, and $\mathbf{H}'_{b2}$ has a dual-diagonal structure with matrix elements at row *i*, column *j* equal to 1 for $i = j$, 1 for $i = j+1$, and 0 elsewhere:

$$H_{b2} = \left[h_b \;\middle|\; H'_{b2} \right]$$

$$= \begin{bmatrix} h_b(0) & 1 & & & & \\ h_b(1) & 1 & 1 & & 0 & \\ \vdots & & 1 & \ddots & & \\ \vdots & & & \ddots & 1 & \\ \vdots & & 0 & & 1 & 1 \\ h_b(m_b-1) & & & & & 1 \end{bmatrix}$$

The base matrix has $h_b(0) = 1$, $h_b(m_b–1) = 1$, and a third value $h_b(j)$, $0<j<(m_b–1)$ equal to 1. The base matrix structure avoids having multiple weight –1 columns in the expanded matrix.

In particular, the nonzero submatrices are circularly right shifted by a particular circular shift value. Each 1 in $\mathbf{H}'_{b2}$ is assigned a shift size of 0, and is replaced by a *z*x*z* identity matrix when expanding to **H**. The two located at the top and the bottom of $\mathbf{h}_b$ are assigned equal shift sizes, and the third 1 in the middle of $\mathbf{h}_b$ is given an unpaired shift size.

A base model matrix is defined for the largest code length (n = 2304) of each code rate. The set of shifts $\{p(i,j)\}$ in the base model matrix are used to determine the shift sizes for all other code lengths of the same code rate. Each base model matrix has n_b = 24 columns, and the expansion factor z_f is equal to n/24 for code length n. Here f is the index of the code lengths for a given code rate, f = 0, 1, 2, … 18. For code length n = 2304 the expansion factor is designated z_0 = 96.

For code rates 1/2, 3/4 A and B code, 2/3 B code, and 5/6 code, the shift sizes $\{p(f, i, j)\}$ for a code size corresponding to expansion factor z_f are derived from $\{p(i,j)\}$ by scaling $p(i,j)$ proportionally, as shown in Equation (120).

$$(f, i, j) = \begin{cases} p(i,j), p(i,j) \le 0 \\ \left\lfloor \dfrac{p(i,j) z_f}{z_0} \right\rfloor, p(i,j) > 0 \end{cases} \tag{120}$$

where $\lfloor x \rfloor$ denotes the flooring function that gives the nearest integer towards $-\infty$.

For code rate 2/3 A code, the shift sizes $\{p(f, i, j)\}$ for a code size corresponding to expansion factor z_f are derived from $\{p(i,j)\}$ by using a modulo function.

$$\text{)}(f, i, j) = \begin{cases} p(i,j), p(i,j) \le 0 \\ mod(p(i,j), z_f), p(i,j) > 0 \end{cases}$$

Rate 1/2:

-1	94	73	-1	-1	-1	-1	-1	55	83	-1	-1	7	0	-1	-1	-1	-1	-1	-1	-1	-1	-1	-1
-1	27	-1	-1	-1	22	79	9	-1	-1	-1	12	-1	0	0	-1	-1	-1	-1	-1	-1	-1	-1	-1
-1	-1	-1	24	22	81	-1	33	-1	-1	-1	0	-1	-1	0	0	-1	-1	-1	-1	-1	-1	-1	-1
61	-1	47	-1	-1	-1	-1	-1	65	25	-1	-1	-1	-1	-1	0	0	-1	-1	-1	-1	-1	-1	-1
-1	-1	39	-1	-1	-1	84	-1	-1	41	72	-1	-1	-1	-1	-1	0	0	-1	-1	-1	-1	-1	-1
-1	-1	-1	-1	46	40	-1	82	-1	-1	-1	79	0	-1	-1	-1	-1	0	0	-1	-1	-1	-1	-1
-1	-1	95	53	-1	-1	-1	-1	-1	14	18	-1	-1	-1	-1	-1	-1	-1	0	0	-1	-1	-1	-1
-1	11	73	-1	-1	-1	2	-1	-1	47	-1	-1	-1	-1	-1	-1	-1	-1	-1	0	0	-1	-1	-1
12	-1	-1	-1	83	24	-1	43	-1	-1	-1	51	-1	-1	-1	-1	-1	-1	-1	-1	0	0	-1	-1
-1	-1	-1	-1	-1	94	-1	59	-1	-1	70	72	-1	-1	-1	-1	-1	-1	-1	-1	-1	0	0	-1
-1	-1	7	65	-1	-1	-1	-1	39	49	-1	-1	-1	-1	-1	-1	-1	-1	-1	-1	-1	-1	0	0
43	-1	-1	-1	-1	66	-1	41	-1	-1	-1	26	7	-1	-1	-1	-1	-1	-1	-1	-1	-1	-1	0

Note that the R=1/2 code is designed so that after a model matrix row permutation of [0, 2, 4, 11, 6, 8, 10, 1, 3, 5, 7, 9] consecutive rows do not intersect, which may be used to increase decoding throughput in some layered decoding architectures.

Rate 2/3 A code:

3	0	-1	-1	2	0	-1	3	7	-1	1	1	-1	-1	-1	-1	1	0	-1	-1	-1	-1	-1	-1
-1	-1	1	-1	36	-1	-1	34	10	-1	-1	18	2	-1	3	0	-1	0	0	-1	-1	-1	-1	-1
-1	-1	12	2	-1	15	-1	40	-1	3	-1	15	-1	2	13	-1	-1	-1	0	0	-1	-1	-1	-1
-1	-1	19	24	-1	3	0	-1	6	-1	17	-1	-1	-1	8	39	-1	-1	-1	0	0	-1	-1	-1
20	-1	6	-1	-1	10	29	-1	-1	28	-1	14	-1	38	-1	-1	0	-1	-1	-1	0	0	-1	-1
-1	-1	10	-1	28	20	-1	-1	8	-1	36	-1	9	-1	21	45	-1	-1	-1	-1	-1	0	0	-1
35	25	-1	37	-1	21	-1	-1	5	-1	-1	0	-1	4	20	-1	-1	-1	-1	-1	-1	-1	0	0
-1	6	6	-1	-1	-1	4	-1	14	30	-1	3	36	-1	14	-1	1	-1	-1	-1	-1	-1	-1	0

Rate 2/3 B code:

2	-1	19	-1	47	-1	48	-1	36	-1	82	-1	47	-1	15	-1	95	0	-1	-1	-1	-1	-1	-1
-1	69	-1	88	-1	33	-1	3	-1	16	-1	37	-1	40	-1	48	-1	0	0	-1	-1	-1	-1	-1
10	-1	86	-1	62	-1	28	-1	85	-1	16	-1	34	-1	73	-1	-1	-1	0	0	-1	-1	-1	-1
-1	28	-1	32	-1	81	-1	27	-1	88	-1	5	-1	56	-1	37	-1	-1	-1	0	0	-1	-1	-1
23	-1	29	-1	15	-1	30	-1	66	-1	24	-1	50	-1	62	-1	-1	-1	-1	-1	0	0	-1	-1
-1	30	-1	65	-1	54	-1	14	-1	0	-1	30	-1	74	-1	0	-1	-1	-1	-1	-1	0	0	-1
32	-1	0	-1	15	-1	56	-1	85	-1	5	-1	6	-1	52	-1	0	-1	-1	-1	-1	-1	0	0
-1	0	-1	47	-1	13	-1	61	-1	84	-1	55	-1	78	-1	41	95	-1	-1	-1	-1	-1	-1	0

Note that the R=2/3 B code is designed so that after a model matrix row permutation of [0, 3, 6, 1, 4, 7, 2, 5] consecutive rows do not intersect, which may be used to increase decoding throughput in some layered decoding architectures.

Rate 3/4 A code:

6	38	3	93	-1	-1	-1	30	70	-1	86	-1	37	38	4	11	-1	46	48	0	-1	-1	-1	-1
62	94	19	84	-1	92	78	-1	15	-1	-1	92	-1	45	24	32	30	-1	-1	0	0	-1	-1	-1
71	-1	55	-1	12	66	45	79	-1	78	-1	-1	10	-1	22	55	70	82	-1	-1	0	0	-1	-1
38	61	-1	66	9	73	47	64	-1	39	61	43	-1	-1	-1	-1	95	32	0	-1	-1	0	0	-1
-1	-1	-1	-1	32	52	55	80	95	22	6	51	24	90	44	20	-1	-1	-1	-1	-1	-1	0	0
-1	63	31	88	20	-1	-1	-1	6	40	56	16	71	53	-1	-1	27	26	48	-1	-1	-1	-1	0

Rate 3/4 B code:

-1	81	-1	28	-1	-1	14	25	17	-1	-1	85	29	52	78	95	22	92	0	0	-1	-1	-1	-1
42	-1	14	68	32	-1	-1	-1	-1	70	43	11	36	40	33	57	38	24	-1	0	0	-1	-1	-1
-1	-1	20	-1	-1	63	39	-1	70	67	-1	38	4	72	47	29	60	5	80	-1	0	0	-1	-1
64	2	-1	-1	63	-1	-1	3	51	-1	81	15	94	9	85	36	14	19	-1	-1	-1	0	0	-1
-1	53	60	80	-1	26	75	-1	-1	-1	-1	86	77	1	3	72	60	25	-1	-1	-1	-1	0	0
77	-1	-1	-1	15	28	-1	35	-1	72	30	68	85	84	26	64	11	89	0	-1	-1	-1	-1	0

Rate 5/6 code:

1	25	55	-1	47	4	-1	91	84	8	86	52	82	33	5	0	36	20	4	77	80	0	-1	-1
-1	6	-1	36	40	47	12	79	47	-1	41	21	12	71	14	72	0	44	49	0	0	0	0	-1
51	81	83	4	67	-1	21	-1	31	24	91	61	81	9	86	78	60	88	67	15	-1	-1	0	0
68	-1	50	15	-1	36	13	10	11	20	53	90	29	92	57	30	84	92	11	66	80	-1	-1	0

8.4.9.2.5.2 Code rate and block size adjustment

The LDPC code flexibly supports different block sizes for each code rate through the use of an expansion factor. Each base model matrix has n_b = 24 columns, and the expansion factor (*z* factor) is equal to *n*/24 for code length *n*. In each case, the number of information bits is equal to the code rate times the coded length *n*. (See Table 510.)

Table 510—LDPC block sizes and code rates

n (bit)	*n* (byte)	z factor	*k* (byte)				Number of slots		
			R=1/2	R=2/3	R=3/4	R=5/6	QPSK	16-QAM	64-QAM
576	72	24	36	48	54	60	6	3	2
672	84	28	42	56	63	70	7	—	—
768	96	32	48	64	72	80	8	4	—
864	108	36	54	72	81	90	9	—	3
960	120	40	60	80	90	100	10	5	—
1056	132	44	66	88	99	110	11	—	—
1152	144	48	72	96	108	120	12	6	4
1248	156	52	78	104	117	130	13	—	—
1344	168	56	84	112	126	140	14	7	—
1440	180	60	90	120	135	150	15	—	5
1536	192	64	96	128	144	160	16	8	—
1632	204	68	102	136	153	170	17	—	—
1728	216	72	108	144	162	180	18	9	6
1824	228	76	114	152	171	190	19	—	—
1920	240	80	120	160	180	200	20	10	—
2016	252	84	126	168	189	210	21	—	7
2112	264	88	132	176	198	220	22	11	—
2208	276	92	138	184	207	230	23	—	—
2304	288	96	144	192	216	240	24	12	8

8.4.9.2.5.3 Packet encoding

The encoding block size *k* shall depend on the number of slots allocated and the modulation specified for the current transmission. Concatenation of a number of slots shall be performed in order to make larger blocks of coding where it is possible, with the limitation of not passing the largest block under the same coding rate (the block defined by the 64-QAM modulation). Table 511 specifies the concatenation of slots for different allocations and modulations. The concatenation rule follows the slot concatenation rule for CC (see Table 492) except that for LDPC the concatenation does not depend on the code rate.

Table 511—Parameter *j* for LDPC

j_1	j_2	j_3	j_4	Modulation
24	12	8	6	QPSK
12	6	4	3	16-QAM
8	4	2	2	64-QAM

For any modulation and FEC rate, given an allocation of N_{SCH} slots, the following parameters are defined:

j_i: parameter dependent on the modulation and number of antennas in case of spatial multiplexing
N_{SCH}: number of allocated slots
F: floor(N_{SCH}/j_i)
M: N_{SCH} mod j_i

The slot concatenation rule for convolutional coding in Table 492 is applied, noting that in Table 492 the parameter n is equal to N_{SCH}, the parameter k is equal to F, and the parameter m is equal to M. The parameter j_i for LDPC is determined as shown in Table 511.

Control information and packets that result in a codeword size n of less than 576 bits are encoded using convolutional coding with appropriate code rates and modulation orders, as described in 8.4.9.2.1.

8.4.9.3 Interleaving

All encoded data bits shall be interleaved by a block interleaver with a block size corresponding to the number of coded bits per the encoded block size N_{cbps}. The interleaver is defined by a two-step permutation. The first ensures that adjacent coded bits are mapped onto nonadjacent subcarriers. The second permutation insures that adjacent coded bits are mapped alternately onto less or more significant bits of the constellation, thus avoiding long runs of lowly reliable bits.

Let N_{cpc} be the number of coded bits per subcarrier, i.e., 2, 4, or 6 for QPSK, 16-QAM, or 64-QAM, respectively. Let $s = N_{cpc}/2$. Within a block of N_{cbps} bits at transmission, let k be the index of the coded bit before the first permutation, m_k be the index of that coded bit after the first and before the second permutation and let j_k be the index after the second permutation, just prior to modulation mapping, and d be the modulo used for the permutation.

The first permutation is defined by Equation (121):

$$m_k = (N_{cbps}/d) \cdot k_{mod(d)} + floor(k/d) \qquad k = 0, 1, \ldots, N_{cbps} - 1 \qquad d = 16 \tag{121}$$

The second permutation is defined by Equation (122).

$$j_k = s \cdot floor(m_k/s) + (m_k + N_{cbps} - floor(d \cdot m_k/N_{cbps}))_{mod(s)} \qquad k = 0, 1, \ldots, N_{cbps} - 1 \qquad d = 16 \tag{122}$$

The de-interleaver, which performs the inverse operation, is also defined by two permutations. Within a received block of N_{cbps} bits, let j be the index of a received bit before the first permutation; m_j be the index of that bit after the first and before the second permutation; and let k_j be the index of that bit after the second permutation, just prior to delivering the block to the decoder.

The first permutation is defined by Equation (123).

$$m_j = s \cdot floor(j/s) + (j + floor(d \cdot j / N_{\text{cbps}}))_{mod(s)} \qquad j = 0, 1, \ldots, N_{\text{cbps}} - 1 \qquad d = 16 \tag{123}$$

The second permutation is defined by Equation (124).

$$k_j = d \cdot m_j - (N_{\text{cbps}} - 1) \cdot floor(d \cdot m_j / N_{\text{cbps}}) \qquad j = 0, 1, \ldots, N_{\text{cbps}} - 1 \qquad d = 16 \tag{124}$$

The first permutation in the de-interleaver is the inverse of the second permutation in the interleaver, and conversely.

8.4.9.3.1 Optional interleaver for convolutional coding

For the convolutional coding optional interleaver, the interleaver structure is as defined in 8.4.9.3. The value of d in Equation (121) through Equation (124) shall be set to $16 \times n$ for the DL and $16 \times n$ for the UL, where n is the number of allocated slots per FEC block.

8.4.9.4 Modulation

8.4.9.4.1 Subcarrier randomization

The PRBS generator depicted hereafter shall be used to produce a sequence, w_k (see Figure 293). The polynomial for the PRBS generator shall be $X^{11} + X^9 + 1$.

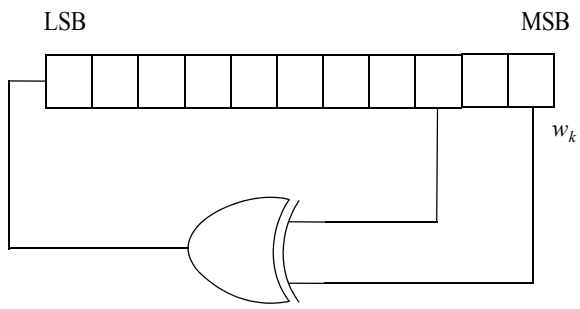

Figure 293—PRBS generator for pilot modulation

The value of the pilot modulation, on subcarrier k, shall be derived from w_k.

The initialization vector of the PRBS generator for both UL and DL shall be designated b10..b0 so that

b0..b4 = 5 LSBs of IDcell as indicated by the frame preamble in the first DL zone and in the DL AAS zone with Diversity_Map support, DL_PermBase following STC_DL_Zone_IE()
= 5 LSBs of DL_PermBase following AAS DL IE without Diversity_Map support in the DL
= 5 LSBs of IDcell (as determined in the preamble) in the UL
For DL and UL, b0 is MSB, and b4 is LSB.

b5..b6 = Set to the segment number + 1 as indicated by the frame preamble in the first DL zone and in the DL AAS zone with Diversity_Map support, PRBS_ID as indicated by the STC DL Zone IE or AAS DL IE without Diversity_Map support in other DL zones
= 0b11 in the UL
For DL and UL, b5 is MSB, and b6 is LSB.

b7..b10 = 0b1111 (all ones) in the downlink and four least significant bits of the Frame Number in the uplink. For TDD uplink, the Frame Number used is the one in which the UL subframe is transmitted. For FDD/H-FDD uplink, the Frame Number is the one in which the UL subframe is transmitted, that is, the Frame Number of the frame relevant to the UL-MAP. For downlink and uplink, b7 is MSB and b10 is LSB, respectively.

For example, should the initialization vector of the PRBS generator be b10..b0 = 10101010101, the initializations result in the sequence w_k = 10101010101000000000.... in the UL. The PRBS generator shall be clocked n times, n = Symbol_Offset mod 32, before the generated output is applied to the subcarriers, where the symbol offset is counted from the first symbol in each zone as zero in the DL except DL AAS zone with Diversity_Map support where the symbol offset is counted from the first symbol of the first DL zone as zero and from allocation start time in the UL (i.e., the first symbol in the UL subframe is indexed 0). The PRBS generator output shall not be applied to the subcarriers of the mid-amble (if present). As a result, the PRBS shall be used so that its n-th output bit will coincide with the first usable subcarrier as defined for the zone in which the symbol resides. The output bit shall be counted from zero. Subcarriers belonging to UL allocations with UIUC = 12 or UIUC = 13 shall not be randomized. A new value shall be generated by the PRBS generator for every subcarrier up to the highest numbered usable subcarrier, in order of physical subcarriers, including the DC subcarrier and usable subcarriers that are not allocated.

Consider DL PUSC. Let $w0$, $w1$, $w2$, … be the bits generated after loading the correct initialization vector. The subcarriers of the first symbol in the zone (with symbol offset of zero) shall use the bits $w0$, $w1$, $w2$, …, $w1680$. The subcarriers of the second symbol (with symbol offset of one) shall use the bits $w1$, $w2$, $w3$, …, $w1681$.

8.4.9.4.2 Data modulation

After the repetition block, the data bits are entered serially to the constellation mapper. Gray-mapped QPSK and 16-QAM (as shown in Figure 294) shall be supported, whereas the support of 64-QAM is optional. The constellations (as shown in Figure 294) shall be normalized by multiplying the constellation point with the indicated factor c to achieve equal average power.

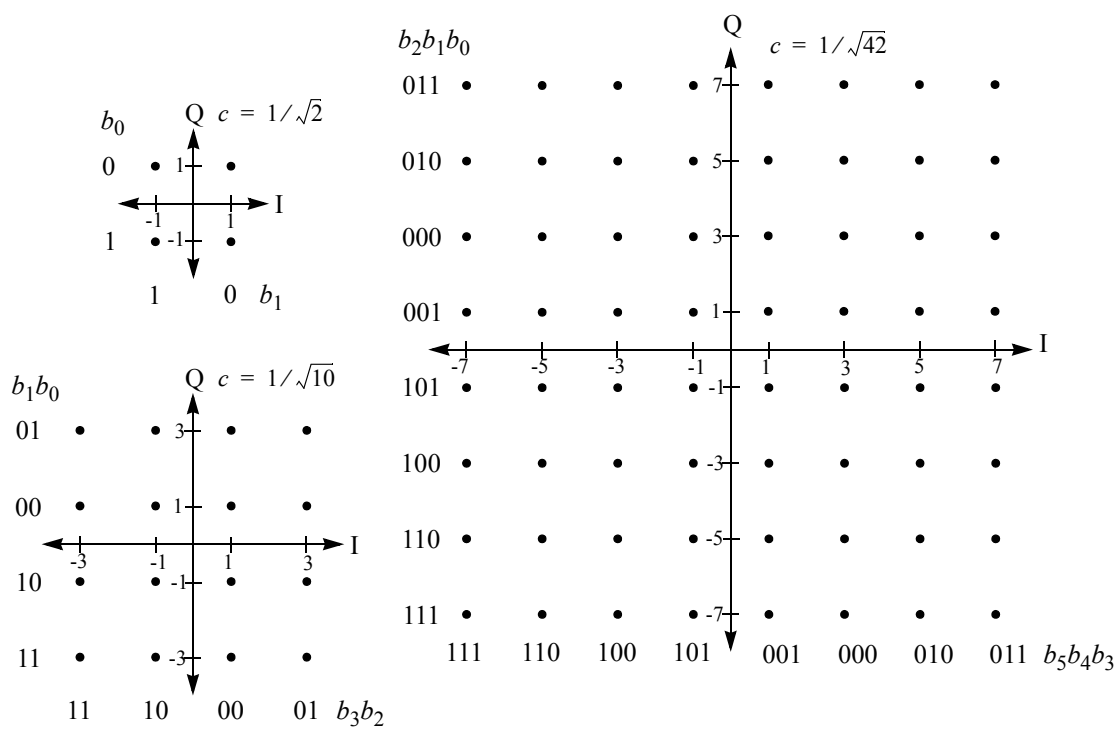

Figure 294—QPSK, 16-QAM, and 64-QAM constellations

Per-allocation adaptive modulation and coding shall be supported in the DL. The UL shall support different modulation schemes for each SS based on the MAC burst configuration messages coming from the BS. Complete description of the MAC/PHY support of adaptive modulation and coding is provided in 6.3.7.

Each M interleaved bits (M = 2,4,6) shall be mapped to the constellation bits $b(M-1) - b0$ in MSB-first order (i.e., the first bit shall be mapped to the higher index bit in the constellation).

The constellation-mapped data shall be subsequently modulated onto the allocated data subcarriers. Before mapping the data to the physical subcarriers (i.e., after applying the subcarrier permutation), each subcarrier shall be multiplied by the factor $2 \times (1/2 - w_k)$ according to the subcarrier physical index, k.

The operation shall be also applied for the subcarriers for the fast-feedback and ACK channels except the ranging.

In the DL, data subcarriers that belong to slots that are not allocated in the DL-MAP shall not be transmitted (zero energy). Data subcarriers that are part of a gap allocation (DIUC = 13) shall be modulated at the BS's discretion. In the DL, such subcarriers that belong to the allocated slots for a burst but are not modulated shall not be transmitted (zero energy).

8.4.9.4.3 Pilot modulation

For the mandatory tile structure in the UL and for the TUSC1/TUSC2 structures in the DL, pilot subcarriers shall be inserted into each data burst in order to constitute the symbol, and they shall be modulated according to their subcarrier location within the OFDMA symbol.

The pilot subcarriers shall be modulated according to Equation (125).

$$\begin{aligned} \mathrm{Re}\{c_k\} &= 2\left(\frac{1}{2} - w_k\right) \\ \mathrm{Im}\{c_k\} &= 0 \end{aligned} \tag{125}$$

In all permutations except UL PUSC, downlink TUSC1, and the DL and UL STC permutations/modes, each pilot shall be transmitted with a boosting of 2.5 dB over the average non-boosted power of each data tone. These pilot subcarriers shall be modulated according to Equation (126).

$$\begin{aligned} Re\{c_k\} &= \frac{8}{3}\left(\frac{1}{2} - w_k\right) \cdot p_k \\ Im\{c_k\} &= 0 \end{aligned} \tag{126}$$

where

p_k is the pilot's polarity (as described in 8.4.6.3.3) for SDMA allocations in AMC AAS zone
p is 1 otherwise

In the DL, for PUSC, PUSC-ASCA FUSC, AMC, and optional FUSC permutations, all pilots (of the segment, in case of PUSC and AMC) shall be modulated, regardless of whether all the subchannels are allocated in the DL-MAP except for AMC and PUSC-ASCA permutations in AAS zone or in a zone using Dedicated pilots, where the BS shall not modulate the pilots that belong in bins or slots that are not allocated in the DL-MAP or are allocated as gaps (DIUC = 13).

In a DL STC zone, the per pilot tone power is 5.5 dB above the per data tone power for each transmit antenna.

In UL STC and collaborative SM, the per pilot tone power is 3 dB above the per data tone power for each transmit antenna for PUSC, and 5.5 dB above the per data tone power for each transmit antenna for AMC.

8.4.9.4.3.1 Preamble pilot modulation

The pilots in the DL preamble shall follow the instructions in 8.4.6.1.1, and shall be modulated according to Equation (127):

$$\begin{aligned} \mathrm{Re}\{PreamblePilotsModulated\} &= 4 \cdot \sqrt{2} \cdot \left(\frac{1}{2} - W_k\right) \\ \mathrm{Im}\{PreamblePilotsModulated\} &= 0 \end{aligned} \tag{127}$$

Subcarriers for UL and DL AAS preambles shall follow the instructions in 8.4.4.7.4.1 and 8.4.4.7.4.2, and shall be modulated according to Equation (128).

$$\begin{aligned} \mathrm{Re}\{c_k\} &= 2 \cdot \left(\frac{1}{2} - P_k\right) \\ \mathrm{Im}\{c_k\} &= 0 \end{aligned} \tag{128}$$

where P_k is the AAS preamble sequence defined by Equation (57) (see 8.4.4.7.4.1 for DL AAS preambles and 8.4.4.7.4.2 for UL AAS preambles).

These AAS preamble subcarriers may further be modified by the UL and DL PHY modifiers as defined in 8.4.5.3.11 and 8.4.5.4.12. After application of any PHY modifiers, the c_k values are multiplied by the factor $2 \times (1/2 - w_k)$.

8.4.9.4.3.2 Ranging pilot modulation

The BPSK modulation on the ranging transmissions, real and imaginary parts, is defined by Equation (129).

$$\begin{aligned} \mathrm{Re}\{c_k\} &= 2 \cdot (1/2 - C_k) \\ \mathrm{Im}\{c_k\} &= 0 \end{aligned} \tag{129}$$

where c_k is the k-th subcarrier in order of increasing frequency of the Ranging Channel, and C_k is the k-th bit of the code generated according to 8.4.7.3

8.4.9.4.4 Example of OFDMA UL CC encoding

An example of one burst of OFDMA uplink using mandatory structure is provided, illustrating each process from randomization through subcarrier modulation. The scenario parameters are as follows:

1) OFDM symbol number start = 0
2) Number of time slots in UL allocation = 2
3) Starting Logical Slot = 16 (mapped onto physical subchannel 16 in the first time slot and physical subchannel 29 in the second time slot due to subchannel rotation)
4) IDcell = 5
5) UL_Permbase = 5
6) Modulation = QPSK
7) Coding scheme = Convolutional coding
8) Coding rate = 1/2
9) Frame Number = 5

Input Data (Hex):

AC BC D2 11 4D AE 15 77 C6 DB F4 C9

Randomized Data (Hex):

55 8A C4 A5 3A 17 24 E1 63 AC 2B F9

Convolutional encoded Data (Hex):

28 33 E4 8D 39 20 26 D5 B6 DC 5E 4A F4 7A DD 29 49 4B 6C 89 15 13 48 CA

Interleaved Data (Hex):

4B 04 7D FA 42 F2 A5 D5 F6 1C 02 1A 58 51 E9 A3 09 A2 4F D5 80 86 BD 1E

Constellation Mapping (data shall be transformed to constellation values: I value/Q value. The value 0.707 represents sqrt(2)/2):

+0.707/-0.707, +0.707/+0.707, -0.707/+0.707, -0.707/-0.707, +0.707/+0.707, +0.707/+0.707, +0.707/-0.707, +0.707/+0.707, +0.707/-0.707, -0.707/-0.707, -0.707/-0.707, +0.707/-0.707, -0.707/-0.707, -0.707/-0.707, -0.707/+0.707, -0.707/+0.707, +0.707/-0.707, +0.707/+0.707, +0.707/+0.707, -0.707/+0.707, -0.707/-0.707, -0.707/-0.707, +0.707/+0.707, -0.707/+0.707, -0.707/+0.707, -0.707/+0.707, +0.707/-0.707, +0.707/-0.707, -0.707/-0.707, +0.707/-0.707, +0.707/-0.707, +0.707/-0.707, -0.707/-0.707, -0.707/-0.707, +0.707/-0.707, -0.707/+0.707, +0.707/+0.707, +0.707/-0.707, -0.707/-0.707, +0.707/+0.707, +0.707/+0.707, +0.707/+0.707, +0.707/+0.707, +0.707/+0.707, -0.707/+0.707, +0.707/+0.707, +0.707/-0.707, -0.707/+0.707, -0.707/+0.707, +0.707/-0.707, +0.707/-0.707, -0.707/+0.707, +0.707/+0.707, +0.707/-0.707, +0.707/-0.707, +0.707/+0.707, +0.707/-0.707, -0.707/-0.707, -0.707/+0.707, -0.707/+0.707, +0.707/-0.707, -0.707/+0.707, -0.707/+0.707, +0.707/+0.707, -0.707/-0.707, +0.707/+0.707, +0.707/+0.707, +0.707/+0.707, -0.707/+0.707, +0.707/-0.707, -0.707/+0.707, -0.707/+0.707, +0.707/+0.707, -0.707/+0.707, +0.707/-0.707, +0.707/+0.707, -0.707/-0.707, -0.707/-0.707, -0.707/-0.707, +0.707/-0.707, +0.707/-0.707, +0.707/-0.707, -0.707/+0.707, +0.707/+0.707, +0.707/+0.707, +0.707/+0.707, -0.707/+0.707, +0.707/+0.707, +0.707/-0.707, -0.707/+0.707, -0.707/+0.707, -0.707/-0.707, -0.707/-0.707, +0.707/-0.707, +0.707/+0.707, +0.707/-0.707, -0.707/-0.707, -0.707/+0.707

These results shall be mapped onto subcarriers and multiplied by PN [assuming the use of logical data subchannel 16, mapped onto physical subchannel 16 in the first time slot and to physical subchannel 29 at the second time slot, structure includes pilots and is in the structure of (Symbol Number, Subcarrier Index, I value/Q value)]:

(0,448,+1/0)(0,449,+0.707/+0.707)(0,450,-0.707/-0.707)(0,451,-1/0)(0,512,-1/0)(0,513,-0.707/+0.707)(0,514,+0.707/-0.707)(0,515,-1/0)(0,984,-1/0)(0,985,+0.707/+0.707)(0,986,+0.707/-0.707)(0,987,-1/0)(0,1189,+1/0)(0,1190,-0.707/-0.707)(0,1191,+0.707/+0.707)(0,1192,-1/0)(0,1505,-1/0)(0,1506,-0.707/-0.707)(0,1507,-0.707/-0.707)(0,1508,+1/0)(0,1753,-1/0)(0,1754,-0.707/-0.707)(0,1755,+0.707/-0.707)(0,1756,+1/0)(1,448,-0.707/-0.707)(1,449,+0.707/-0.707)(1,450,+0.707/-0.707)(1,451,-0.707/+0.707)(1,512,-0.707/+0.707)(1,513,-0.707/-0.707)(1,514,+0.707/-0.707)(1,515,-0.707/-0.707)(1,984,+0.707/+0.707)(1,985,+0.707/+0.707)(1,986,-0.707/+0.707)(1,987,+0.707/+0.707)(1,1189,+0.707/-0.707)(1,1190,-0.707/-0.707)(1,1191,+0.707/+0.707)(1,1192,-0.707/+0.707)(1,1505,+0.707/+0.707)(1,1506,+0.707/+0.707)(1,1507,-0.707/+0.707)(1,1508,-0.707/+0.707)(1,1753,-0.707/+0.707)(1,1754,-0.707/-0.707)(1,1755,+0.707/+0.707)(1,1756,+0.707/-0.707)(2,448,+1/0)(2,449,+0.707/+0.707)(2,450,-0.707/-0.707)(2,451,+1/0)(2,512,-1/0)(2,513,-0.707/-0.707)(2,514,-0.707/+0.707)(2,515,-1/0)(2,984,+1/0)(2,985,+0.707/-0.707)(2,986,-0.707/+0.707)(2,987,-1/0)(2,1189,+1/0)(2,1190,-0.707/

+0.707)(2,1191,-0.707/+0.707)(2,1192,-1/0)(2,1505,-1/0)(2,1506,-0.707/-0.707)(2,1507,+0.707/-0.707)(2,1508,+1/0)(2,1753,-1/0)(2,1754,+0.707/-0.707)(2,1755,-0.707/+0.707)(2,1756,+1/0) (3,328,-1/0)(3,329,+0.707/-0.707)(3,330,-0.707/-0.707)(3,331,-1/0)(3,524,-1/0)(3,525,-0.707/+0.707)(3,526,+0.707/-0.707)(3,527,-1/0)(3,784,-1/0)(3,785,-0.707/+0.707)(3,786,-0.707/+0.707)(3,787,-1/0)(3,1209,-1/0)(3,1210,+0.707/-0.707)(3,1211,-0.707/-0.707)(3,1212,-1/0) (3,1361,+1/0)(3,1362,+0.707/+0.707)(3,1363,+0.707/+0.707)(3,1364,+1/0)(3,1601,+1/0)(3,1602,+0.707/+0.707)(3,1603,+0.707/-0.707)(3,1604,+1/0) (4,328,+0.707/-0.707)(4,329,-0.707/+0.707)(4,330,+0.707/-0.707)(4,331,+0.707/+0.707)(4,524,-0.707/+0.707)(4,525,-0.707/+0.707)(4,526,-0.707/-0.707)(4,527,+0.707/+0.707)(4,784,+0.707/+0.707)(4,785,-0.707/-0.707)(4,786,-0.707/+0.707)(4,787,-0.707/+0.707)(4,1209,-0.707/+0.707)(4,1210,+0.707/-0.707)(4,1211,-0.707/-0.707)(4,1212,-0.707/-0.707)(4,1361,-0.707/-0.707)(4,1362,-0.707/+0.707)(4,1363,+0.707/+0.707)(4,1364,-0.707/+0.707)(4,1601,-0.707/+0.707)(4,1602,+0.707/-0.707)(4,1603,-0.707/-0.707)(4,1604,-0.707/-0.707)(5,328,+1/0)(5,329,-0.707/+0.707)(5,330,+0.707/+0.707)(5,331,+1/0)(5,524,-1/0)(5,525,-0.707/+0.707)(5,526,+0.707/+0.707)(5,527,+1/0) (5,784,+1/0)(5,785,+0.707/-0.707)(5,786,-0.707/+0.707)(5,787,-1/0) (5,1209,-1/0)(5,1210,-0.707/+0.707)(5,1211,+0.707/-0.707)(5,1212,+1/0)(5,1361,+1/0)(5,1362,+0.707/+0.707)(5,1363,-0.707/+0.707)(5,1364,-1/0)(5,1601,-1/0)(5,1602,+0.707/-0.707)(5,1603,+0.707/+0.707)(5,1604,+1/0)

8.4.9.5 Repetition

Repetition coding can be used to further increase signal margin over the modulation and FEC mechanisms. In the case of repetition coding, R = 2, 4, or 6, the number of allocated slots (N_s) shall be a whole multiple of the repetition factor R for UL. For the DL, the number of the allocated slots (N_s) shall be in the range of $[R \times K, R \times K + (R-1)]$, where K is the number of the required slots before applying the repetition scheme. For example, when the required number of slots before the repetition is 10(= K) and the repetition of R = 6 shall be applied for the burst transmission, then the number of the allocated slots (N_s) for the burst can be from 60 slots to 65 slots.

The binary data that fits into a region that is repetition coded is reduced by a factor R compared to a nonrepeated region of the $(\lfloor N_s / R \rfloor \times R)$ slots with the same size and FEC code type. After FEC and bit-interleaving, the data is segmented into slots, and each group of bits designated to fit in a slot shall be repeated R times to form R contiguous slots following the normal slot ordering that is used for data mapping. The actual constellation data can be different because of the subcarrier randomization as defined by 8.4.9.4.1. This repetition scheme applies only to QPSK modulation; it can be applied in all coding schemes except Optional IR HARQ with CTC defined in 8.4.9.2.3.5.

8.4.9.6 Zone boosting

When the usage of the subchannels in a DL zone is limited by the a bitmap, all subcarriers including pilot subcarriers in the corresponding zones shall be boosted. The amount of subcarrier boosting is the ratio of the number of N_{used} subcarriers, excluding the DC subcarrier, to the number of the allowed subcarriers. The "allowed subcarriers" refers to the data and pilot subcarriers that are allowed to be used in the zone by the bitmap. When zone boosting is applied, the amount of additional subchannel boosting, as specified by the boosting field in the DL-MAP IE that can be applied, shall not exceed 9 dB minus the amount of zone boosting. The bitmaps that limit subcarrier usage are the "Used subchannel bitmap" in the FCH that applies to the first DL PUSC zone and to PUSC zones in which Use all SC field is set to '0', and the "DL AMC allocated physical bands bitmap", "TUSC1 permutation active subchannels bitmap", and "TUSC2 permutation active subchannels bitmap" TLVs in the DCD.

The total transmit power for any symbol in a given STC zone without dedicate pilots shall not be more than:

$$P_{\text{tx\_Preamble}} - 4.2 + 10 \cdot \log_{10}(\text{Num\_STC\_Antennas}) \quad \text{dBm} \tag{130}$$

where *Num_STC_antennas* is the number of STC antennas defined in the STC_DL_IE() and $P_{tx\_Preamble}$ is the total power transmitted in the preamble symbol in dBm. Other than this requirement, the power level in the STC zones without dedicated pilots in a frame is unrelated to the power level in the non-STC zones in a frame.

8.4.9.7 Multiple HARQ (optional)

Supported Multiple HARQ modes may be enabled for any of the existing FEC modes. A change in the HARQ mode is signaled using the HARQ Compact DL-MAP IE format for switch HARQ mode (see 6.3.2.3.38.6.7). The definitions of the HARQ modes are defined in Table 512.

Table 512—HARQ modes definition

HARQ mode	Definition
0	CTC IR
1	Generic chase
2	CC IR
3..15	*Reserved*

8.4.9.7.1 Generic chase HARQ

When chase combining HARQ is enabled for a particular MS, the HARQ_MAP shall be used to signal the allocation and the HARQ Control IE shall use the generic chase allocation format. The encoding of the companded subchannel field is defined in Table 513. Concatenation rules for each respective coding mode are applied as defined for non-HARQ transmissions.

Table 513—Companded subchannels

Companded subchannels	Assigned subchannels	Companded subchannels	Assigned subchannels
0	1	16	40
1	2	17	48
2	3	18	56
3	4	19	64
4	5	20	80
5	6	21	96
6	7	22	112
7	8	23	128
8	10	24	160
9	12	25	192
10	14	26	224
11	16	27	256

Table 513—Companded subchannels *(continued)*

Companded subchannels	Assigned subchannels	Companded subchannels	Assigned subchannels
12	20	28	320
13	24	29	384
14	28	30	448
15	32	31	512

When HARQ is applied to a packet, error detection is provided on the HARQ packet through a Cyclic Redundancy Check (CRC).

The size of the CRC is 16 bits. CRC 16-CCITT, as defined in ITU-T Recommendation X.25, shall be included at the end of the HARQ packet and after the padding bits.

8.4.9.7.2 CC-IR HARQ

When CC-IR is enabled for a particular SS, the HARQ_MAP shall be used to signal the allocation and the HARQ Control IE shall use the CC-IR allocation format. The encoding of the companded subchannel field is identical to generic chase HARQ and is defined in Table 513. Concatenation rules for each respective coding mode are applied as defined for non-HARQ transmissions.

8.4.10 Control mechanisms

8.4.10.1 Synchronization

8.4.10.1.1 Network synchronization

For TDD and FDD realizations, it is recommended (but not required) that all BSs be time synchronized to a common timing signal. In the event of the loss of the network timing signal, BSs shall continue to operate and shall automatically resynchronize to the network timing signal when it is recovered. The synchronizing reference shall be a 1 pps timing pulse and may also include a 10 MHz frequency reference. These signals are typically provided by a GPS receiver.

For both FDD and TDD realizations, frequency references derived from the timing reference may be used to control the frequency accuracy of BSs provided that they meet the frequency accuracy requirements of 8.4.15. This applies during normal operation and during loss of timing reference.

8.4.10.1.2 SS synchronization

For any duplexing, all SSs shall acquire and adjust their timing so that all UL OFDMA symbols arrive time coincident at the BS to a accuracy of ± 25% of the minimum guard-interval or better.

8.4.10.2 Ranging

Ranging for time and power is performed during two phases of operation: during (re)registration and when synchronization is lost; and second, during FDD or TDD transmission on a periodic basis.

During registration, a new subscriber registers using the random access channel, and if successful, is entered into a ranging process under control of the BS. The ranging process is cyclic in nature where default time

and power parameters are used to initiate the process followed by cycles where (re)calculated parameters are used in succession until parameters meet acceptance criteria for the new subscriber. These parameters are monitored, measured, and stored at the BS, and transmitted to the subscriber unit for use during normal exchange of data. During normal exchange of data, the stored parameters are updated in a periodic manner based on configurable update intervals to ensure changes in the channel can be accommodated. The update intervals shall vary in a controlled manner on a subscriber unit by subscriber unit basis.

Ranging on reregistration follows the same process as new registration.

8.4.10.3 Power control

In situations where the subcarrier power specified by power control mechanisms indicate that the transmit power for a given transmission would exceed the maximum transmit power for the specified MCS, the transmit power shall be limited to the maximum allowed. The MS shall evaluate the data allocation transmit power for each zone independently. Within each zone, all data allocations that are not overlapping in time shall be scaled by the same factor such that the OFDMA symbol with the largest power is limited to the maximum allowed. Regions defined by UIUC=0,12,13 and extended UIUC2=8 that do not overlap data allocations on any OFDMA symbol may be scaled independently of data allocations. UIUC 13 regions used for Sounding Zone allocations shall be scaled independently of data allocations, CQI, ranging and HARQ-ACK allocations if such region contains multiple symbols, each symbol shall be scaled independently.

A power control algorithm shall be supported for the UL channel with both an initial calibration and periodic adjustment procedure without loss of data. The BS should be capable of providing accurate power measurements of the received burst signal. This value can then be compared against a reference level, and the resulting error can be fed back to the SS in a calibration message coming from the MAC. The power control algorithm shall be designed to support power attenuation due to distance loss or power fluctuations at rates of at most 30 dB/s with depths of at least 10 dB for fixed deployment. The exact algorithm implementation is vendor-specific. The total power control range consists of both a fixed portion and a portion that is automatically controlled by feedback. The power control algorithm shall take into account the interaction of the RF power amplifier with different burst profiles. For example, when changing from one burst profile to another, margins should be maintained to prevent saturation of the amplifier and to prevent violation of emissions masks.

A transmitting SS shall maintain the same transmitted power density regardless of the number of subchannels assigned, unless the maximum power level is reached. In other words, when the number of active subchannels allocated to a user is reduced, the total transmitted power shall be reduced proportionally by the SS, without additional power control messages. When the number of subchannels is increased, the total transmitted power shall also be increased proportionally. However, the transmitted power level shall not exceed the maximum levels dictated by signal integrity considerations and regulatory requirements. The SS shall interpret power control messages as the required changes to the transmitted power density.

To maintain at the BS a power density consistent with the modulation and FEC rate used by each SS, the BS may change the SS TX power, through power correction messages, as well as the SS-assigned modulation and FEC rate. When the MS transmits in regions of any UIUCs, the SS shall use a temporary TX power value set according to Equation (131) (in decibels).

$$P_{new} = P_{last} + (C/N_{new} - C/N_{last}) - (10 \log_{10}(R_{new}) - 10 \log_{10}(R_{last})) + Offset \quad (131)$$

where

P_{new} = the power of the new UL burst in the current UL frame
C/N_{new} = normalized C/N for the new UL burst in the current UL frame
R_{new} = repetition factor R for the new UL burst in the current UL frame

P_{last} = the power of the burst with the maximum value of (C/N – 10log10(R)) in the most recently transmitted UL frame

C/N_{last} = normalized C/N associated with P_{last} (thus referring to the burst with the maximum value of (C/N – 10log10(R)) in the most recently transmitted UL frame)

R_{last} = repetition factor R associated with P_{last} (thus referring to the burst with the maximum value of (C/N – 10log10(R)) in the most recently transmitted UL frame)

Offset = an accumulation of power correction terms sent by the BS since the last transmission

where the power is per subcarrier power.

Initial terms P_{new}, P_{last}, C/N_{new}, C/N_{last}, R_{new}, and R_{last} in closed loop power control Equation (131) are obtained from the ranging CDMA code transmission. That is the initial term P_{last} is the transmitted ranging power (if an adjustment of RNG-RSP exists, then the adjustment of RNG-RSP is applied), C/N_{last} is the C/N of ranging CDMA code in the Table 515 (Normalized C/N per modulation) or Normalized C/N override in the UCD, and R_{last} is zero.

Table 514—Normalized *C*/N per modulation

Modulation/ FEC rate	Normalized C/N
ACK region	–3.0
FAST FEEDBACK MAP ACK Channel MAP NACK Channel	0
CDMA code	3
QPSK-1/3	0.5
QPSK-1/2	6
QPSK-2/3	7.5
QPSK-3/4	9
16-QAM-1/2	12
16-QAM-2/3	14.5
16-QAM-3/4	15
16-QAM-5/6	17.5
64-QAM-1/2	18
64-QAM-2/3	20
64-QAM-3/4	21
64-QAM-5/6	23

Table 515—Normalized C/N per modulation for sounding transmission only

Modulation/ FEC rate	Normalized C/N
Sounding transmission	9

Initial terms P_{new}, C/N_{new}, and R_{new} are those of the first UL burst transmission with UIUC = 1~10.

For the periodic ranging, once MS sends periodic ranging code and fails to receive RNG-RSP, MS shall adjust its Tx power for the subsequent periodic ranging codes transmission up to $P_{TX\_IR\_MAX}$ (6.3.9.5.1). For the BR ranging, once MS sends BR ranging code and fails to receive CDMA allocation IE or RNG-RSP, MS shall adjust its Tx power for the subsequent BR ranging codes transmission up to $P_{TX\_IR\_MAX}$ (6.3.9.5.1).

If MS has UL HARQ connection, the normalized C/N value for HARQ bursts can be adjusted referencing to non HARQ bursts. The power offset is defined in UCD TLV of "Relative_Power_Offset_for_UL_HARQ_burst." If this TLV exists in the UCD, then the power offset shall be added to the C/N value in Table 514 in case the transmission is HARQ.

When the MS transmits an UL burst containing a MAC management message (PDUs that have Basic CID, Primary management CID, or Secondary management CID), the transmit power for the burst shall be boosted by the value indicated by "Relative Power Offset for UL Burst Containing MAC Management Message" in the UCD.

The MS shall not change its power control mode during sleep mode. The MS shall not change its power control mode upon exit from sleep mode. In case of network re-entry from idle mode, the MS should use the closed loop power control mode upon completion of the initial ranging until it receives PMC_RSP message from BS.

8.4.10.3.1 Closed-loop power control

The SS shall report the maximum available power and the normalized transmitted power. These parameters may be used by the BS for optimal assignment of coding schemes and modulations and also for optimal allocation of subchannels. The algorithm is vendor-specific. The maximum available power may be reported in SBC-REQ. The current transmitted power shall also reported in the REP-RSP message if the relevant flag in the REP-REQ message has been set.

The current transmitted power is the power of the burst that carries the message. The maximum available power is reported for QPSK QAM-16 and QAM-64 constellations. The current transmitted power and the maximum power parameters are reported in dBm. The parameters are quantized in 0.5 dBm steps ranging from –64 dBm (encoded 0x00) to 63.5 dBm (encoded 0xFF) for maximum available power and –84 dBm (encoded 0x00) to 43.5 dBm (encoded 0xFF) for current transmitted power as defined in 11.8.3.2 and 11.1.1 respectively. Values outside this range shall be assigned the closest extreme. SSs that do not support QAM64 shall report the value of 0x00 in the maximum QAM-64 power field.

8.4.10.3.2 Optional open-loop power control

When the open-loop power control is supported and the UL power control mode is changed to open-loop power control by PMC_RSP, the power per a subcarrier shall be maintained for the UL transmission as follows. This open-loop power control shall be applied for the all UL bursts. See Equation (132).

$$P(dBm) = L + C/N + NI - 10 \times \log_{10}(R) + \text{Offset\_SS}_{perSS} + \text{Offset\_BS}_{perSS} \tag{132}$$

where

P is the TX power level (dBm) per a subcarrier for the current transmission, including MS Tx antenna gain.

L is the estimated average current UL propagation loss. It shall include SS Tx antenna gain and path loss, but exclude the BS Rx antenna gain.

C/N is the Normalized *C/N* of the modulation/FEC rate for the current transmission, as appearing in Table 514. Table 514 can be modified by UCD (Normalized *C/N* override or Normalized *C/N* override 2).

R is the number of repetitions for the modulation/FEC rate.

NI is the estimated average power level (dBm) of the noise and interference per a subcarrier at BS, not including BS Rx antenna gain.

$Offset\_SS_{perSS}$ is the correction term for SS-specific power offset. It is controlled by SS. Its initial value is zero.

$Offset\_BS_{perSS}$ is the correction term for SS-specific power offset. It is controlled by BS with power control messages. When $\text{Offset\_BS}_{\text{perSS}}$ is set through the PMC_RSP message, it shall include BS Rx antenna gain.

The estimated average current UL propagation loss, L, shall be calculated based on the total power received on the active subcarriers of the frame preamble, and with reference to the BS_EIRP parameter sent by the BS.

The default normalized C/N values per modulation are given by Table 514. The operating parameters BS_EIRP is signaled by a DCD message (see Table 575) and NI is signaled by "UL noise and interference level IE" (8.4.5.3.19).

Additionally, the BS controls the $\text{Offset\_BS}_{\text{perSS}}$ using PMC_RSP message (6.3.2.3.54) to override the $\text{Offset\_BS}_{\text{perSS}}$ value, or using RNG-RSP (6.3.2.3.6), Fast Power Control (FPC) message (6.3.2.3.34), Power Control IE (8.4.5.4.5) and UL-MAP Fast Tracking IE (8.4.5.4.20) to adjust the $\text{Offset\_BS}_{\text{perSS}}$ value. The accumulated power control value shall be used for $\text{Offset\_BS}_{\text{perSS}}$.

MS shall reflect the amount of power adjusted by itself, during ranging due to the failure in receiving a response to the CDMA code transmitted (6.3.9.5.1, 8.4.10.3), to the $\text{Offset\_BS}_{\text{perSS}}$ as a correction term for the power offset.

The $\text{Offset\_BS}_{\text{perSS}}$ can be updated using relative or fixed form (as a function of the relevant adjustment commands used). Fixed form is used when the parameter is obtained from a PMC_RSP message. In this case, the SS should replace the old $\text{Offset\_BS}_{\text{perSS}}$ value by the new $\text{Offset\_BS}_{\text{perSS}}$ sent by the BS. With all other messages mentioned in the previous paragraph, relative form is used. In this case, MS should increase and decrease the $\text{Offset\_BS}_{\text{perSS}}$ according to the offset value sent by BS.

The actual power setting shall be quantized to the nearest implementable value, subject to the specification (8.4.13.1). For each transmission, the SS shall limit the power, as required to satisfy the spectral masks and EVM requirements.

a) *Passive UL open-loop power control.* In passive UL open-loop power control with $\text{Offset\_SS}_{\text{perSS}}$ retention (i.e., 'Power control mode change = 0b10' indicated by PMC_REQ/RSP message), the SS shall set $\text{Offset\_SS}_{\text{perSS}}$ as described below in the event of power control mode change from closed loop to open loop, and modify the TX power value using Equation (133).

$$Offset\_SS_{perSS} = P_{Tx,CL\_last} - (Lo_{L\_init} + NI_{OL\_init}) - C/N_{CL\_last} + 10log_{10}(R_{CL\_last}) \quad (133)$$

where

— $P_{Tx,\ CL\_last}$ MS transmit power level used in the last transmission in closed loop power control mode.

— L_{OL_init} Path-loss value estimated at MS during power control mode change from closed loop to open loop.

— NI_{OL_init} Latest NI value transmitted in UL_noise_and_interference_level_IE prior to mode change to open loop power control.
— C/N_{CL_last} Normalized *C/N* according to modulation and FEC used in the last transmission in closed loop power control mode.
— R_{CL_last} Repetition factor for the modulation and FEC scheme used in the last transmission in closed loop power control mode.

The above $\text{Offset\_SS}_{\text{perSS}}$ shall be calculated only once during the power control mode change from closed loop to open loop. Therefore the $\text{Offset\_SS}_{\text{perSS}}$ value will remain constant unless another power control mode change is executed.

b) *Active UL open-loop power control.* An alternative way is that the SS may adjust $\text{Offset\_SS}_{\text{perSS}}$ value within a range. See Equation (134).

$$Offset\_Bound_{lower} \le Offset\_SS_{perSS} \le Offset\_Bound_{upper} \tag{134}$$

where

$Offset\_Bound_{upper}$ is the upper bound of $Offset\_SS_{perSS}$

$Offset\_Bound_{lower}$ is the lower bound of $Offset\_SS_{perSS}$

Or in case ARQ is enabled at some UL connections, the $Offset\_SS_{perSS}$ may be updated automatically based on the Ack/Nack within the range as specified by Equation (135). The specific algorithm is described as follows (in dB):

$$\begin{aligned} &\text{if NAK is received} && Offset\_SS_{perSS} = Offset\_SS_{perSS} + UP\_STEP \\ &\text{else if ACK is received} && Offset\_SS_{perSS} = Offset\_SS_{perSS} - DOWN\_STEP \\ &\text{else where} && Offset\_SS_{perSS} = Offset\_SS_{perSS} \end{aligned} \tag{135}$$

where

*UP_STEP*i s the up adjustment step as specified by SS-Specific Up Power Offset Adjustment Step TLV
DOWN _STEP is the down adjustment step as specified by SS-Specific Down Power Offset Adjustment Step TLV

The operating parameters *UP_STEP*, *DOWN _STEP*, $Offset\_Bound_{upper}$, $Offset\_Bound_{lower}$ are signaled by a dedicated UCD message TLV.

8.4.10.3.2.1 UL Tx power and Headroom transmission condition

If the MS supports open loop power control, it shall support the BR and UL Tx power report header (6.3.2.1.2.1.2).

During initial network entry and full network re-entry, if TLV 196 (TX Power Report) is present in the UCD and the conditions of Equation (136) are met, the SS shall begin reporting TX power status after the RNG-RSP is received from the BS and before the DSA message is sent. For handover or idle mode re-entry, if TLV 196 (TX Power Report) is present in the UCD and the conditions of Equation (136) are met, the SS should begin reporting transmission power status immediately after the RNG-RSP is received. Optimized re-entry requires the SS to confirm that it received the RNG-RSP by sending a BW Request or other UL indication. The SS should use the BW Request and TX Power report header to confirm reception of the RNG-RSP and to provide SS transmission power status (enabling the BS to immediately allocate UL bandwidth). The SS shall report TX power status using the BR and UL Tx power report header

(6.3.2.1.2.1.2), the PHY channel report header (6.3.2.1.2.1.5) or the UL Tx power report extended subheader (6.3.2.2.7.5).

$$\left|M_{avg}(n_{last}) - M_{avg}(n)\right| \geq Tx\_Power\_Report\_Threshold \quad \text{(dB)} \tag{136}$$

or

$$n - n_{last} \geq Tx\_Power\_Report\_Interval$$

where

$$M(n) = L + NI + Offset\_SS_{perSS} + Offset\_BS_{perSS} \quad \text{(dB)}$$

$$M_{avg}(n) = 10\log(\alpha_{\text{p\_avg}} \cdot 10^{M(n)/10} + (1 - \alpha_{\text{p\_avg}}) \cdot 10^{(M_{avg}(n-1))/10})$$

n_{last} is the time index when the last SS Tx power report is sent. The unit is frame. Tx_Power_Report_Threshold, Tx_Power_Report_Interval, and α_{p_avg} are indicated in UCD. In UCD, there are sets of those parameters sets: depending on the allocation CQICH to SS, the corresponding parameter set shall be used.

With closed loop power control, the MS may not be able to implement the first trigger with Tx_Power_Report_Threshold in Equation (136) because several of the terms ($\text{Offset\_SS}_{\text{perSS}}$, $\text{Offset\_BS}_{\text{perSS}}$) are only defined in open loop power control. The MS can use the first trigger in Equation (136) but set $\text{Offset\_SS}_{\text{perSS}}$ to zero and $\text{Offset\_BS}_{\text{perSS}}$ to the cumulative value of all power corrections from the BS. Optionally, the MS can elect to ignore the first trigger and report transmission power status only using the second trigger with Tx_Power_Report_Interval.

The MS may stop reporting transmission power status in the following cases in order to lower ranging channel loading and improve battery life:

— The MS enters sleep mode (i.e., activates a PSC),
— The MS enters idle mode, or
— The MS has no remaining UL data to send.

If the MS stops reporting transmission power status, it should start sending transmission power status immediately if UL allocations start (e.g., in case of new active UGS or ertPS connection) or if the MS sends a BW Request Header requesting an UL allocation.

The MS should estimate the $M_{avg}(n)$ on an ongoing basis, using all frames during availability periods instead of only during frames when the MS report its transmission power

8.4.10.3.2.2 Power control in handoff

During handover, the target BS may provide BW allocation information to the MS using Fast_Ranging_IE to send an RNG-REQ message. In case of FBSS handover, the target BS may allocate a CQICH for the MS to report CINR, or the MS may transmit the bandwidth request ranging code in order to request uplink bandwidth allocation at the target BS. In these cases, the target BS shall also transmit the UL_noise_and_interference_level_IE in the same frame in which the OFDMA_Fast_Ranging_IE or CQICH _Allocation_IE is transmitted. This UL_noise_and_interference_level_IE shall include at least the NI field that corresponds to the same zone that Fast_Ranging_IE points to (i.e., the UL zone in which the MS may transmit RNG-REQ) if the Fast_Ranging_IE is used. The UL_noise_and_interference_level_IE shall include at least the NI field that corresponds to the CQICH region if CQICH_Allocation_IE is transmitted. Also, during the FBSS process, the target BS shall provide the UL_noise_and_interference_level_IE that includes at least the NI field corresponding to the Periodic Ranging Region if the BS does not allocate

CQICH to the MS. This NI value is used for the MS to determine the initial transmit power level for the transmission of bandwidth request ranging code to the target BS. In turn, the MS shall calculate the initial transmit power at the target BS as follows:

1) If the MS is in open loop power control mode with serving BS, then Equation (132) of 8.4.10.3.2 shall be used. In this calculation, the MS shall reuse $Offset\_BS_{perSS}$ from its serving BS, while all other equation parameters shall be target BS related.
2) If the MS is in closed loop power control mode with serving BS, then Equation (137) shall be used:

$$P_{TBS} = P_{last,SBS} - RSSI_{TBS} + RSSI_{last,SBS} + NI_{TBS} - NI_{last,SBS} + C/N_{TBS} - C/N_{last,SBS} + BS\_EIRP_{TBS} - BS\_EIRP_{SBS} - 10log_{10}(R_{TBS}) + 10log_{10}(R_{last,SBS}) \quad (137)$$

where

$P_{last,SBS}$ MS transmit power level of the last transmission to the SBS [dBm].
P_{TBS} Initial MS transmit power level (dBm) to be used in subsequent HO-ranging, bandwidth request ranging, CQICH transmission or Fast_Ranging_IE allocation transmissions to the TBS.
$RSSI_{last,SBS}$ DL RSSI at MS of the SBS preamble, used to derive Tx power of last transmission at the SBS [dBm].
$RSSI_{TBS}$ DL RSSI of the TBS preamble, measured by the MS [dBm].
$NI_{last,SBS}$ Combined noise+interference known at time of last transmission at the SBS [dBm].
NI_{TBS} Combined noise+interference at the TBS [dBm].
$C/N_{last,SBS}$ Carrier-to-noise level for assigned ULMCS of last transmission at the SBS [dB].
$C/N_{,TBS}$ Carrier-to-noise level for ULMCS derived from the UIUC assigned to the Fast_Ranging_IE allocation, carrier-to-noise level for CDMA code, or carrier-to-noise level for FAST_FEEDBACK at the TBS [dB].
BS_EIRP_{SBS} SBS equivalent isotropic transmit power (from DCD) [dBm].
BS_EIRP_{TBS} TBS equivalent isotropic transmit power (from DCD settings in MOB_NBR-ADV) [dBm].
$R_{last,SBS}$ Repetition factor of assigned ULMCS of last transmission at the SBS.
R_{TBS} Repetition factor of assigned ULMCS at the TBS.

3) If the MS does not have one of the parameters needed for the above calculations (open loop or closed loop), it shall disregard Fast_Ranging_IE allocations or CQICH_Allocation_IE allocations and perform CDMA handover ranging with the target BS.

During HO ranging following the first transmission of the first CDMA code until the completion of the ranging process, the power control mode to be used should be up to the MS. Upon completion of HO, the MS should use the power control mode it was in before the HO.

8.4.11 Fast-feedback channels

Fast-feedback slots may be individually allocated to SS for transmission of PHY-related information that requires fast response from the SS. The allocations are done in unicast manner through the fast-feedback MAC subheader (see 6.3.2.2.6), CQICH Control IE (see 6.3.2.3.38.5), or CQICH Allocation IE (see 8.4.5.4.11); and the transmission takes place in a specific UL region designated by UIUC = 0.

In addition, the fast feedback region may also contain MAP NACK channels and MAP ACK channels. Both MAP NACK and MAP ACK channels are assigned to the MS using the Persistent HARQ DL MAP IE (8.4.5.3.29) and the Persistent HARQ UL MAP IE (8.4.5.4.28).

Each fast-feedback slot consists of one OFDMA slot mapped in a manner similar to the mapping of normal UL data. A fast-feedback slot uses QPSK modulation on the 48 data subcarriers it contains and can carry a

data payload of 4 bits. Table 516 defines the mapping between the payload bit sequences and the subcarriers modulation.

Table 516—Fast-feedback channel subcarrier modulation

4 bit payload	Fast-feedback vector indices per Tile Tile(0), Tile(1), … ,Tile(5)
0b0000	0,0,0,0,0,0
0b0001	1,1,1,1,1,1
0b0010	2,2,2,2,2,2
0b0011	3,3,3,3,3,3
0b0100	4,4,4,4,4,4
0b0101	5,5,5,5,5,5
0b0110	6,6,6,6,6,6
0b0111	7,7,7,7,7,7
0b1000	0,1,2,3,4,5
0b1001	1,2,3,4,5,6
0b1010	2,3,4,5,6,7
0b1011	3,4,5,6,7,0
0b1100	4,5,6,7,0,1
0b1101	5,6,7,0,1,2
0b1110	6,7,0,1,2,3
0b1111	7,0,1,2,3,4

The fast-feedback code words used in Table 516 belong to a set of orthogonal vectors and are mapped directly to the data subcarriers of a tile in frequency-first order starting from the first OFDMA symbol, and the tile indices are defined in Equation (65) for PUSC and Equation (68) for optional PUSC. The vectors are defined in Table 517.

Table 517—Fast-feedback subcarrier modulation in each vector

Vector index	Data subcarrier modulation per Code word Subcarrier(0), Subcarrier(1), … Subcarrier(7)
0	$P0,P1,P2,P3,P0,P1,P2,P3$
1	$P0,P3,P2,P1,P0,P3,P2,P1$
2	$P0,P0,P1,P1,P2,P2,P3,P3$
3	$P0,P0,P3,P3,P2,P2,P1,P1$
4	$P0,P0,P0,P0,P0,P0,P0,P0$
5	$P0,P2,P0,P2,P0,P2,P0,P2$

Table 517—Fast-feedback subcarrier modulation in each vector *(continued)*

Vector index	Data subcarrier modulation per Code word Subcarrier(0), Subcarrier(1), … Subcarrier(7)
6	$P0,P2,P0,P2,P2,P0,P2,P0$
7	$P0,P2,P2,P0,P2,P0,P0,P2$

where

$$
\begin{aligned}
P0 &= \exp\left(j \cdot \frac{\pi}{4}\right) \\
P1 &= \exp\left(j \cdot \frac{3\pi}{4}\right) \\
P2 &= \exp\left(-j \cdot \frac{3\pi}{4}\right) \\
P3 &= \exp\left(-j \cdot \frac{\pi}{4}\right)
\end{aligned}
\tag{138}
$$

The fast-feedback slot includes 4 bits of payload data, whose encoding depended on the instruction given in the FFSH, CQICH Control IE, and CQICH Allocation IE. These encodings are defined in 8.4.11.1 through 8.4.11.15.

In order to maintain operation of link adaptation mechanisms at the BS and adequate CINR reporting, the MS should not transmit non-CINR report codewords (such as: the indication flag and the Extended rtPS bandwidth request codewords) on two consecutive CQICH allocations each in different frame that are allocated to it.

If MIMO feedback opportunities are allocated to the MS, then the MS should not transmit the non-CINR, and non-MIMO reports on three consecutive allocations each in different frame.

8.4.11.1 Fast DL measurement feedback

MIMO-capable MS shall measure post-processing CINR for each individual layers as shown in Figure 295. When the FFSH's Feedback Type field is 00, the MS shall report the post-processing average CINR (Avg_CINR). When BS requests MS feedback through CQICH_Alloc_IE() or CQICH_Enhanced_Alloc_IE() with feedback_type field = 00, MS shall report Avg_CINR as described next.

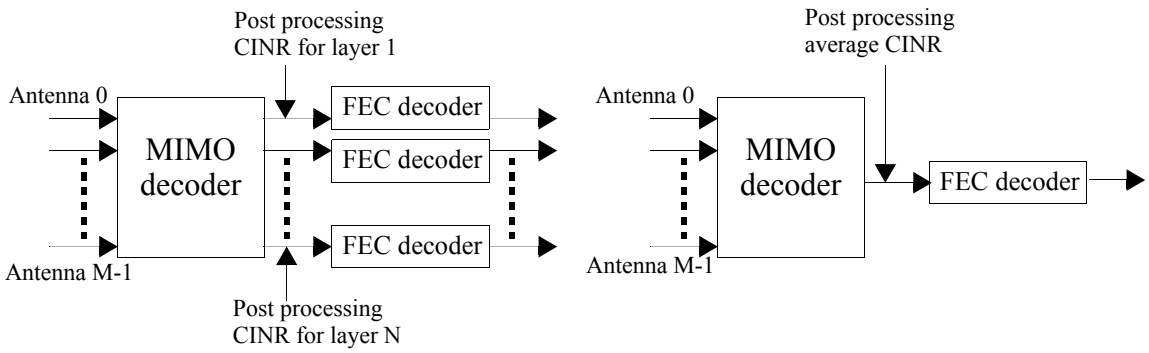

Figure 295—Post processed CINR for MIMO region

For a single layer MIMO system (Matrix A and Matrix B) denote p as the index for a pair of pilots, σ_p^2 is the average noise plus interference variance over MS's receive antennas and pair of pilots. Further denote $C(d, y|H)$ as the receiver-constrained mutual information conditioned on the channel knowledge, wherein d is the transmitted signal, y is the post-processing receive signal and H is the channel matrix between Tx and Rx antennas.

For Matrix B the average CINR is given by Equation (139).

$$\begin{aligned} \text{Avg\_CINR}_{dB} &= 10\log_{10}(e^{C(d,y|H)} - 1) \\ C(d, y|H) &= \frac{1}{P}\sum_{p=1}^{P} C_p(d_p, y_p|H_p) \\ C_p(d_p, y_p|H_p) &\approx \frac{1}{N}\log det\left(I_N + \frac{H_p^H H_p}{\sigma_p^2}\right) \end{aligned} \tag{139}$$

where N is the number of streams, i.e., $N = 2$ is this case.

For Matrix A the average CINR is given by Equation (140).

$$\begin{aligned} \text{Avg\_CINR}_{dB} &= 10\log_{10}(e^{C(d,y|H)} - 1) \\ C(d, y|H) &= \frac{1}{P}\sum_{p=1}^{P} C_p(d_p, y_p|H_p) \\ C_p(d_p, y_p|H_p) &\approx \log\left(1 + \frac{1}{\sigma_p^2}\|H_p\|_F^2\right) \end{aligned} \tag{140}$$

where $\| \ \|_F^2$ denotes the Frobenius norm of a matrix.

Standard-compliant approximations of Equation (139) and Equation (140) are shown next.

Referring to Figure 296, the following are defined:

l is the index of an OFDMA symbol, $1 \le l \le L$

j is the index of a "column", and has resolution of two OFDMA symbols, $1 \le j \le J$

subcarrier block is a set of physically adjacent subcarriers,

m is the index of subcarrier block, $1 \le m \le M$

k is the index of a pair of pilots within one subcarrier block within one column, $1 \le k \le K$

Δ is a subset of the columns in the zone, $\Delta \subseteq \{1, 2, \ldots, J\}$

$|\Delta|$ is the cardinality of Δ, where $2 \le |\Delta| \le J$

Λ is a subset of the OFDMA symbols in the zone, $\Lambda \subseteq \{1, 2, \ldots, J\}$

$|\Lambda|$ is the cardinality of Λ, where $2 \le |\Lambda| \le J$

Note that the number of subcarrier blocks is implementation-dependent with the only constraint that $M \ge 1$. Also note that when working in segmented PUSC, only the active pilots in the subcarrier block should be considered.

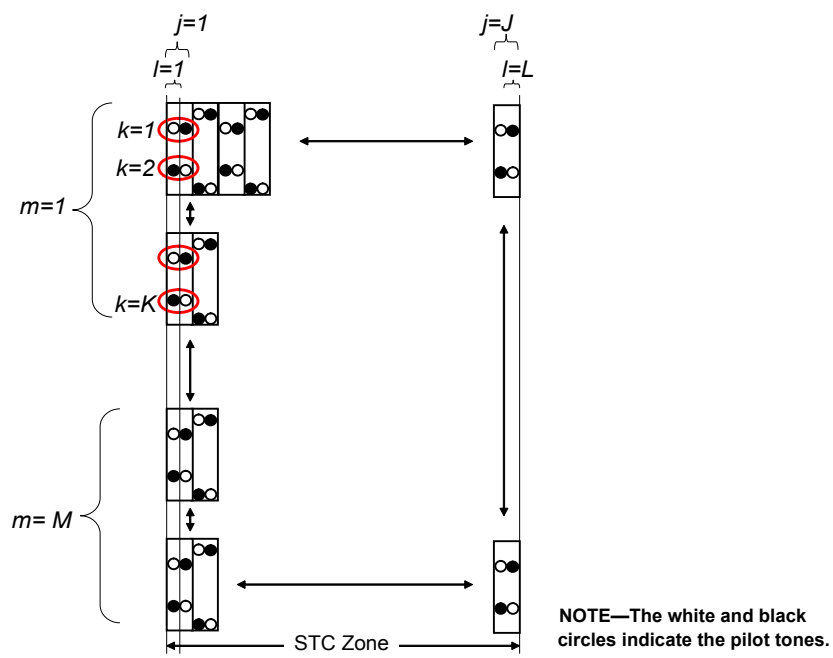

Figure 296—PUSC STC zone illustration

The average CINR over a zone can be given by:

$$\text{Avg\_CINR}_{dB} = 10\log_{10}(e^{C(d,y|H)} - q)$$

where $q = 0$ or $q = 1$ depending on the MS specific implementation. This is to say that MS specific implementation can drop the "1" inside the log term.

The capacity can be averaged over a zone as follows:

$$C(d, y|H) = \frac{1}{M}\sum_{m=1}^{M} C_m$$

$$C_m = \frac{1}{|\Delta|}\sum_{j \in \Delta} C_{m,j}$$

For Matrix B, we have

$$C_{m,j} = \frac{1}{2K}\sum_{k=1}^{K} \log det\left(zI + \frac{H_{m,j,k}^{H} H_{m,j,k}}{\sigma_m^2}\right)$$

For Matrix A, we have

$$C_{m,j} = \frac{1}{K}\sum_{k=1}^{K} \log\left(z + \frac{\|H_{m,j,k}\|_F^2}{\sigma_m^2}\right)$$

where $z = 0$ or $z = 1$ depending on the MS specific implementation. This is to say that the MS specific implementation can drop the "*I*" inside the determinant for the capacity expression for Matrix B and the "1" inside the log term for the capacity expression for Matrix A.

The noise can be averaged over the *m*-th subcarrier block as follows:

$$\sigma_m^2 = \frac{1}{|\Lambda|}\frac{1}{K}\sum_{l \in \Lambda}\sum_{k=1}^{K} \sigma_{l,k}^2$$

where $\sigma_{l,k}^2$ is the noise plus interference variance averaged over the MS's receive antennas on a single pilot position (l,k).

When the Feedback_type field in CQICH_Enhanced_Alloc_IE() is 0b000 with CQICH type 0b101, Equation (141) shall be used.

$$\text{Payload bits nibble} = \begin{cases} 0, & S/N \le 1 - B \\ n, & (2n - 1 - B) < S/N \le (2n + 1 - B), \quad 0 < n < 15 \\ 15, & S/N > 29 - B \end{cases} \tag{141}$$

where *B* is the positive integer value indicated in the SN Reporting Base TLV (see 11.7.22). *B* shall default to "3" if the SN Reporting Base TLV was not included in the REG-RSP.

For an MS that supports the feedback method by using feedback header, if *M* is the value of the indication flag in UCD, the MS shall set the payload bits nibble as *M – 1*. It should not use the payload bits nibble calculated based on Equation (141).

For band AMC operation, the SS shall report differential of CINR of selected bands on its fast-feedback channel or feedback header type 1101.

When the CINR report is requested on an STC zone (CQICH Alloc IE with "Feedback type"='0b00' or '0b01', "Report type"='1' and "Zone type"= '01') the method for calculating the CINR depends on the MIMO mode. The MS shall calculate the CINR in accordance with the MIMO mode of its most recent unicast burst

(i.e., with explicit CID or RCID in the MAP) in the STC zone of interest regardless of the frame it appeared in, and without consideration of whether the burst was decoded successfully (using the start of a burst as its reference point, the last burst in a zone is the one with the highest sub-channel offset among those bursts that have the highest symbol offset.) If there has not been any unicast burst (i.e., with explicit CID or RCID in the MAP) transmitted in the STC zone to the MS in any frame since the last initial network entry or re-entry (after handover or idle mode), the MS shall prepare the CINR report according to the MIMO mode of the STC zone.

For SS with more than one receive antennas, the reported CINR shall include the processing gain associated with the multiple antennas and use the quantization defined for the CQICH.

8.4.11.2 Fast MIMO feedback

When the FFSH's Feedback Type field is 01 or 10 the SS shall report the MIMO coefficient the BS should use for best DL reception (see 8.4.8.1.6). The mapping for the complex weights is shown in Figure 297.

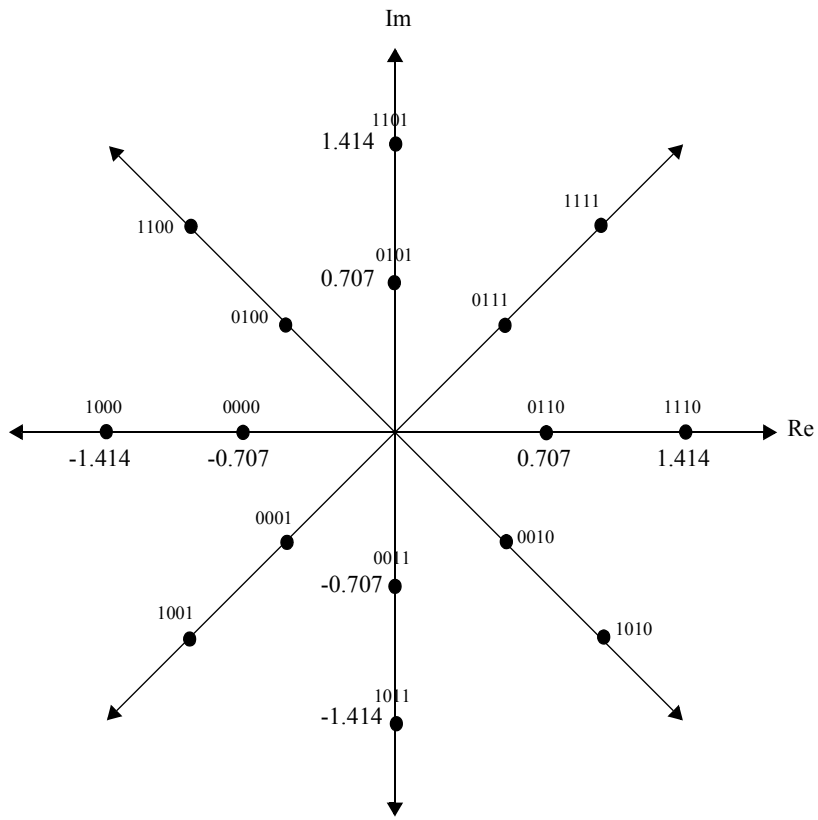

Figure 297—Mapping of MIMO coefficients to fast MIMO feedback payload bits

When CQI Feedback Type field in CQICH_Enhanced_Alloc_IE() (see 8.4.5.4.14) is 0b011 and CQICH type is 0b101, the MS shall report the MIMO coefficient the BS should use for best DL reception. The mapping for the complex weights is shown in Figure 297. For this type of feedback, if N is the number of BS Tx antennas, then (N – 1) CQICH shall be allocated to the MS, and MS shall report the desired antenna weights of antenna 1 through N – 1 based on antenna 0.

8.4.11.3 Mode selection feedback

For an SS that supports the STC option (see 8.4.8), when the FFSH's Feedback Type field is 11 or at a specific frame indicated in the CQICH_Alloc_IE(), the SS shall send its selection in terms of MIMO mode (STTD versus SM) or permutation mode on the assigned fast-feedback channel. Table 518 shows the encoding of payload bits for the fast-feedback slot (see 8.4.5.4.9), and Table 519 shows the encoding of payload bits for the secondary fast-feedback slot.

Table 518—Encoding of payload bits for fast-feedback slot

Value	Description
0b0000	STTD and PUSC/FUSC permutation
0b0001	STTD and adjacent-subcarrier permutation
0b0010	SM and PUSC/FUSC permutation
0b0011	SM and adjacent-subcarrier permutation
0b0100	Closed-loop SM and PUSC/FUSC permutation
0b0101	Closed-loop SM and adjacent-subcarrier permutation
0b0110	Closed-loop SM + Beamforming and adjacent-subcarrier permutation
0b0111	Antenna Group A1 for rate 1 For 3-antenna BS, See 8.4.8.3.4.1 For 4-antenna BS, See 8.4.8.3.5.1
0b1000	Antenna Group A2 for rate 1
0b1001	Antenna Group A3 for rate 1
0b1010	Antenna Group B1 for rate 2 For 3-antenna BS, see 8.4.8.3.4.2 For 4-antenna BS, see 8.4.8.3.5.2
0b1011	Antenna Group B2 for rate 2
0b1100	Antenna Group B3 for rate 2
0b1101	Antenna Group B4 for rate 2 (only for 4-antenna BS)
0b1110	Antenna Group B5 for rate 2 (only for 4-antenna BS)
0b1111	Antenna Group B6 for rate 2 (only for 4-antenna BS)

Table 519—Encoding of payload bits for secondary fast-feedback slot

Value (binary)	Description
0000	Antenna selection option 0 (see Table 474 for 3 Tx and Table 475 for 4Tx)
0001	Antenna selection option 1 (see Table 474 for 3 Tx and Table 475 for 4Tx)
0010	Antenna selection option 2 (see Table 474 for 3 Tx and Table 475 for 4Tx)
0011	Antenna selection option 3 (see Table 474 for 3 Tx and Table 475 for 4Tx)
0100	Antenna selection option 4 (see Table 474 for 3 Tx and Table 475 for 4Tx)

Table 519—Encoding of payload bits for secondary fast-feedback slot *(continued)*

Value (binary)	Description
0101	Antenna selection option 5 (see Table 474 for 3 Tx and Table 475 for 4Tx)
0110	Antenna selection option 6 (see Table 474 for 3 Tx and Table 475 for 4Tx)
0111	Antenna selection option 7 (see Table 474 for 3 Tx and Table 475 for 4Tx)
1000	Reduced Precoding matrix codebook entry 0
1001	Reduced Precoding matrix codebook entry 1
1010	Reduced Precoding matrix codebook entry 2
1011	Reduced Precoding matrix codebook entry 3
1100	Reduced Precoding matrix codebook entry 4
1101	Reduced Precoding matrix codebook entry 5
1110	Reduced Precoding matrix codebook entry 6
1111	Reduced Precoding matrix codebook entry 7

8.4.11.4 Effective CINR feedback for fast-feedback channel

When the feedback type field in the CQICH_IE() is 0b01 or the effective CINR report is request by REP-REQ, the SS shall report the effective CINR, as defined in 6.3.18, according to Table 520. To avoid ambiguity, both the BS and the SS must know the FEC type assumed for this report. The FEC type assumed for the MCS column is the first FEC type in the table in 11.8.3.5.2 for which the SS and BS have successfully negotiated the capability exchange. If none of the FEC types in 11.8.3.5.2 have been successfully negotiated, then the mandatory FEC type shall be assumed. In the case of 6-bit CQI, Table 520 shall be applied to the 4 LSB bits and the two MSB bits shall be set to ‘00’.

Table 520—Effective CINR feedback encoding

Label	Encoding	MCS
0	0b0000	QPSK-1/2, repetition 6
1	0b0001	QPSK-1/2, repetition 4
2	0b0010	QPSK-1/2, repetition 2
3	0b0011	QPSK-1/2
4	0b0100	QPSK-3/4
5	0b0101	16-QAM-1/2
6	0b0110	16-QAM-3/4
7	0b0111	64-QAM-1/2
8	0b1000	64-QAM-2/3
9	0b1001	64-QAM-3/4
10	0b1010	64-QAM-5/6

Table 520—Effective CINR feedback encoding *(continued)*

Label	Encoding	MCS
11	0b1011	A decrease in CQICH duration is recommended (effective CINR has not changed from previous CQICH slot). This encoding shall not be repeated over consecutive CQI slots.
12–15	0b1100–0b1111	*Reserved*

8.4.11.5 Enhanced fast-feedback channels

Enhanced fast-feedback slots may be individually allocated to an MS for transmission of PHY related information that requires fast response from the MS. The allocations are performed using one of the following options:

— In a unicast manner through the FFSH (see 6.3.2.2.6)
— The CQICH_Control IE() (see 6.3.2.3.38.5)
— The CQICH_Alloc_IE() (see 8.4.5.4.11)
— The CQICH_Enhanced_ Alloc_IE() (see 8.4.5.4.14)
— The MIMO_Compact_DL-MAP_IE() (see 6.3.2.3.38.6.7)
— Dedicated_MIMO_DL_Control_IE() (8.4.5.3.21.1)
— The AAS_SDMA_DL_IE() (8.4.5.4.24)

The transmission takes place in a specific UL region designated by UIUC = 0.

Each 3-bit MIMO fast-feedback slot consists of 1/2 OFDMA slots mapped in a manner similar to the mapping of ACK Channel. An enhanced fast-feedback slot uses QPSK modulation on the 24 data subcarriers it contains, and can carry a data payload of 3 bits. Table 521 defines the mapping between the payload bit sequences and the subcarriers modulation.

Table 521— 3-bit MIMO fast-feedback channel subcarrier modulation

3-bit payload (binary)	Fast-feedback vector indices per Tile Even = {Tile(0), Tile(2),Tile(4)} or Odd = {Tile(1), Tile(3),Tile(5)}
000	0,0,0
001	1,1,1
010	2,2,2
011	3,3,3
100	4,4,4
101	5,5,5
110	6,6,6
111	7,7,7

Each enhanced fast-feedback slot consists of 1 OFDMA slots mapped in a manner similar to the mapping of normal UL data. An enhanced fast-feedback slot uses QPSK modulation on the 48 data subcarriers it contains and can carry a data payload of 6 bits.

Table 522—Enhanced fast-feedback channel subcarrier modulation

6-bit Payload (binary)	Fast-feedback vector indices per Tile Tile(0), Tile(1), ... Tile(5)	6-bit Payload (binary)	Fast-feedback vector indices per Tile Tile(0), Tile(1), ... Tile(5)
000000	0,0,0,0,0,0	100000	6,7,5,1,2,4
000001	1,1,1,1,1,1	100001	7,6,4,0,3,5
000010	2,2,2,2,2,2	100010	4,5,7,3,0,6
000011	3,3,3,3,3,3	100011	5,4,6,2,1,7
000100	4,4,4,4,4,4	100100	2,3,1,5,6,0
000101	5,5,5,5,5,5	100101	3,2,0,4,7,1
000110	6,6,6,6,6,6	100110	0,1,3,7,4,2
000111	7,7,7,7,7,7	100111	1,0,2,6,5,3
001000	2,4,3,6,7,5	101000	7,5,1,2,4,3
001001	3,5,2,7,6,4	101001	6,4,0,3,5,2
001010	0,6,1,4,5,7	101010	5,7,3,0,6,1
001011	1,7,0,5,4,6	101011	4,6,2,1,7,0
001100	6,0,7,2,3,1	101100	3,1,5,6,0,7
001101	7,1,6,3,2,0	101101	2,0,4,7,1,6
001110	4,2,5,0,1,3	101110	1,3,7,4,2,5
001111	5,3,4,1,0,2	101111	0,2,6,5,3,4
010000	4,3,6,7,5,1	110000	5,1,2,4,3,6
010001	5,2,7,6,4,0	110001	4,0,3,5,2,7
010010	6,1,4,5,7,3	110010	7,3,0,6,1,4
010011	7,0,5,4,6,2	110011	6,2,1,7,0,5
010100	0,7,2,3,1,5	110100	1,5,6,0,7,2
010101	1,6,3,2,0,4	110101	0,4,7,1,6,3
010110	2,5,0,1,3,7	110110	3,7,4,2,5,0
010111	3,4,1,0,2,6	110111	2,6,5,3,4,1
011000	3,6,7,5,1,2	111000	1,2,4,3,6,7
011001	2,7,6,4,0,3	111001	0,3,5,2,7,6
011010	1,4,5,7,3,0	111010	3,0,6,1,4,5
011011	0,5,4,6,2,1	111011	2,1,7,0,5,4
011100	7,2,3,1,5,6	111100	5,6,0,7,2,3

Table 522—Enhanced fast-feedback channel subcarrier modulation *(continued)*

6-bit Payload (binary)	Fast-feedback vector indices per Tile Tile(0), Tile(1), ... Tile(5)	6-bit Payload (binary)	Fast-feedback vector indices per Tile Tile(0), Tile(1), ... Tile(5)
011101	6,3,2,0,4,7	111101	4,7,1,6,3,2
011110	5,0,1,3,7,4	111110	7,4,2,5,0,1
011111	4,1,0,2,6,5	111111	6,5,3,4,1,0

Table 522 defines the mapping between the payload bit sequences and the subcarriers modulation for 6 bit CQI type 0b000 and 0b100. For CQICH types 0b110, 0b111, and 0b001 the 6 bits CQI shall follow the mapping as described below:

- CQICH type 0b110 (even): Tile(0), Tile(2), Tile(4)
- CQICH type 0b111 (odd): Tile(1), Tile(3), Tile(5)
- CQICH type 0b001 (18 bit mapping in a full slot):
  - $Bit_{17} – Bit_{12}$ – Tile (0), tile (3)
  - $Bit_{11} – Bit_{6}$ – Tile (1), tile (4)
  - $Bit_{5} – Bit_{0}$ – Tile (2), tile (5)

The fast-feedback channel is orthogonally modulated with QPSK symbols. Let $M_{n,8m+k}(0 \le k \le 7)$ be the modulation symbol index of the *k*-th modulation symbol in the *m*-th UL tile of the *n*-th fast-feedback channel. The possible modulation patterns composed of $M_{n,m8}$, $M_{n,8m+1}$, . . . $M_{n,8m+7}$ the *m*-th tile of the *n*-th fast-feedback channel are defined in Table 523.

Table 523—Orthogonal modulation index in fast-feedback channel

Vector index	$M_{n,m8}$, $M_{n,8m+1}$, . . . $M_{n,8m+7}$
0	P0, P1, P2, P3, P0, P1, P2, P3
1	P0, P3, P2, P1, P0, P3, P2, P1
2	P0, P0, P1, P1, P2, P2, P3, P3
3	P0, P0, P3, P3, P2, P2, P1, P1
4	P0, P0, P0, P0, P0, P0, P0, P0
5	P0, P2, P0, P2, P0, P2, P0, P2
6	P0, P2, P0, P2, P2, P0, P2, P0
7	P0, P2, P2, P0, P2, P0, P0, P2

where

$$P0 = \exp\left(j \cdot \frac{\pi}{4}\right)$$

$$P1 = \exp\left(j \cdot \frac{3\pi}{4}\right)$$

$$P2 = \exp\left(-j \cdot \frac{3\pi}{4}\right)$$

$$P3 = \exp\left(-j \cdot \frac{\pi}{4}\right)$$

$M_{n,8m+k}$ is mapped to a fast-feedback channel tile, as shown in Figure 298, for PUSC UL subchannel, and in Figure 299, for optional PUSC UL subchannel. A fast-feedback channel is mapped to one subchannel composed of six tiles.

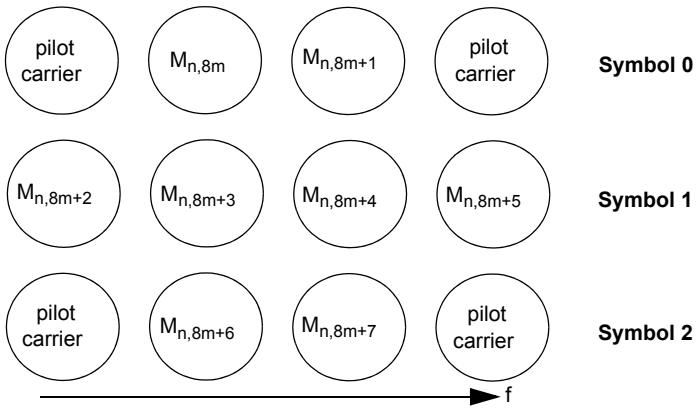

Figure 298—Subcarrier mapping of fast-feedback modulation symbols for PUSC

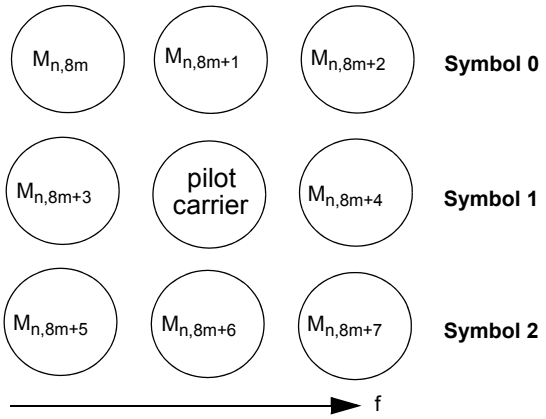

Figure 299—Subcarrier mapping of fast-feedback modulation symbols for optional PUSC

The enhanced fast-feedback slot includes 6 bits of payload data, whose encoding depends on the instruction given in the FFSH, the CQICH_Control IE(), the CQICH_Alloc_IE(), or the CQICH_Enhanced_Alloc_IE(). The following subclauses define these encodings.

8.4.11.6 Fast DL measurement feedback for enhanced fast-feedback channel

When the FFSH's Feedback Type field is 0b00 or the feedback is requested through CQICH_Alloc_IE() (see 8.4.5.4.11), or the Feedback Type field in CQICH_Enhanced_Alloc_IE() is 0b000-0b010 with CQICH type 0b000 or 0b100 (see 8.4.5.4.13), the MS shall report the SNR it measures on the DL. Equation (142) shall be used.

$$\text{Payload bits} = \begin{cases} 0, & S/N \le -\text{B} \\ n, & (n-1-B) < (S/N) \le (n-B),\ 0 < n < 31 \\ 31, & S/N > 30 - \text{B} \end{cases} \tag{142}$$

where B is the positive integer value indicated in the SN Reporting Base TLV (see 11.7.22). B shall default to "3" if the SN Reporting Base TLV was not included in the REG-RSP.

For MIMO capable MSs, if the BS allocates a single CQICH to the MS in UL-MAP (CQICH_Num = 0) for the purposes of Fast DL Measurement, the MS shall report the effective post processing SNR Avg CINR as defined in 8.4.11.1. Otherwise, if the BS allocate multiple CQICHs to the MS in UL-MAP (CQICH_Num > 0) for the purposes of Fast DL Measurement, the MS shall report post processing S/N of individual layers in order of layer indices.

8.4.11.7 Fast MIMO feedback of quantized precoding weight for enhanced fast-feedback channel

When the FFSH's Feedback Type field is 0b01 or 0b10, or the CQI Type field in the MIMO Compact DL-MAP IE() (see 6.3.2.3.38.6.7) is 0b01, or the Feedback Type field in CQICH_Enhanced_Alloc_IE() (see 8.4.5.4.13) is 0b011 with CQICH type 0b000 or 0b100, the MS shall report the MIMO coefficient the BS should use for best DL reception. The mapping for the complex weights is shown in Figure 300. For this type of feedback, if N is the number of BS Tx antennas, then (N – 1) CQICH shall be allocated to the SS and SS shall report the desired antenna weights of antenna 1 through N – 1 based on antenna 0.

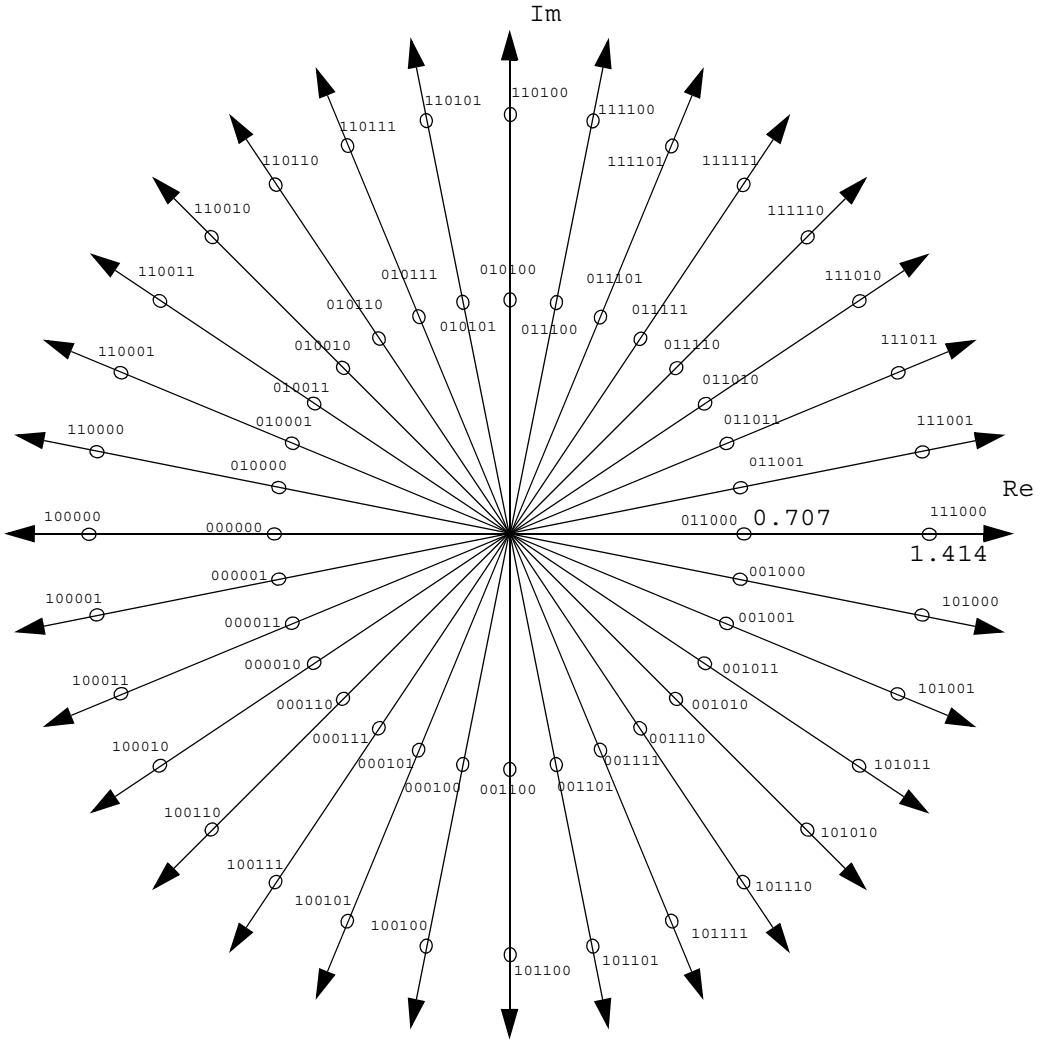

Figure 300—Mapping of MIMO coefficients for quantized precoding weights for enhanced fast MIMO feedback payload bits

8.4.11.8 MIMO mode feedback for enhanced fast-feedback channel

When the enhanced fast-feedback channel is employed, the SS may report the MIMO mode feedback on the assigned CQICH when the FFSH's Feedback Type field is 0b00; or the Feedback Type field in the MIMO Compact DL-MAP IE() (see 6.3.2.3.38.6.7) is 0b000, 0b001, or 0b010; or the Feedback Type field in CQICH_Enhanced_Alloc_IE() (see 8.4.5.4.14) is 0b000, 0b001, or 0b010 with CQICH type 0b000 or 0b100. The encoding of payload bits is shown in Table 524.

Table 524—Encoding of payload bits for MIMO mode feedback with enhanced fast-feedback channel

Value (binary)	Description
101000	STTD and PUSC/FUSC permutation.
101001	STTD and adjacent-subcarrier permutation.
101010	SM and PUSC/FUSC permutation.
101011	SM and adjacent-subcarrier permutation.
101100	Hybrid and PUSC/FUSC permutation.
101101	Hybrid and adjacent-subcarrier permutation.
101110–110110	Interpretation according to Table 525, Table 526, or Table 527, depending on if antenna grouping, antenna selection or a reduced precoding matrix codebook is used.
110111	Closed-loop precoding with 1 stream.
111000	Closed-loop precoding with 2 streams.
111001	Closed-loop precoding with 3 streams.
111010	Closed-loop precoding with 4 streams.
111011	Extended rtPS bandwidth request (see 8.4.11.14).
111100	Indication Flag Feedback (see 8.4.11.12).

Clarification of streams concept

The number of streams is the number of outputs from the space-time code.

Table 525—Interpretation of code words 0b101110–0b110110 in Table 524 in the case of using antenna grouping

Value (binary) 6-bit/3-bit	Description
101110/000	Antenna Group A1 for rate 1 For 3-antenna BS, see 8.4.8.3.4.1 For 4-antenna BS, see 8.4.8.3.5.1
101111/001	Antenna Group A2 for rate 1
110000/010	Antenna Group A3 for rate 1
110001/000	Antenna Group B1 for rate 2 For 3-antenna BS, see 8.4.8.3.4.2 For 4-antenna BS, see 8.4.8.3.5.2
110010/001	Antenna Group B2 for rate 2

Table 525—Interpretation of code words 0b101110–0b110110 in Table 524 in the case of using antenna grouping *(continued)*

Value (binary) 6-bit/3-bit	Description
110011/010	Antenna Group B3 for rate 2
110100/011	Antenna Group B4 for rate 2 (only for 4-antenna BS)
110101/100	Antenna Group B5 for rate 2 (only for 4-antenna BS)
110110/101	Antenna Group B6 for rate 2 (only for 4-antenna BS)

Table 526—Interpretation of code words 0b101110–0b110110 in Table 524 in the case of using antenna selection

Value (binary) 6-bit/3-bit	Description
101110/000	Antenna selection option 0 (see Table 474 for 3 Tx and Table 475 for 4Tx)
101111/001	Antenna selection option 1 (see Table 474 for 3 Tx and Table 475 for 4Tx)
110000/010	Antenna selection option 2 (see Table 474 for 3 Tx and Table 475 for 4Tx)
110001/011	Antenna selection option 3 (see Table 474 for 3 Tx and Table 475 for 4Tx)
110010/100	Antenna selection option 4 (see Table 474 for 3 Tx and Table 475 for 4Tx)
110011/101	Antenna selection option 5 (see Table 474 for 3 Tx and Table 475 for 4Tx)
110100/110	Antenna selection option 6 (see Table 474 for 3 Tx and Table 475 for 4Tx)
110101/111	Antenna selection option 7 (see Table 474 for 3 Tx and Table 475 for 4Tx)
110110	*Reserved*

Table 527—Interpretation of code words 0b101110-0b110110 in Table 524 in the case of using reduced precoding matrix codebook

Value (binary) 6-bit/3-bit	Description
101110/000	Reduced Precoding matrix codebook entry 0
101111/001	Reduced Precoding matrix codebook entry 1
110000/010	Reduced Precoding matrix codebook entry 2
110001/011	Reduced Precoding matrix codebook entry 3
110010/100	Reduced Precoding matrix codebook entry 4
110011/101	Reduced Precoding matrix codebook entry 5
110100/110	Reduced Precoding matrix codebook entry 6

Table 527—Interpretation of code words 0b101110-0b110110 in Table 524 in the case of using reduced precoding matrix codebook *(continued)*

Value (binary) 6-bit/3-bit	Description
110101/111	Reduced Precoding matrix codebook entry 7
110110	*Reserved*

8.4.11.9 Anchor BS report

The MS may send its Anchor BS selection using the 8 codewords numbered from 32 to 38. Table 528 shows the encoding of payload bits for the fast-feedback slot (see 8.4.5.4.9).

Table 528—Encoding of payload bits for fast-feedback slot

Value (binary)	Description
100000	Anchor BS for TEMP_BS_ID = 0b000
100001	Anchor BS for TEMP_BS_ID = 0b001
100010	Anchor BS for TEMP_BS_ID = 0b010
100011	Anchor BS for TEMP_BS_ID = 0b011
100100	Anchor BS for TEMP_BS_ID = 0b100
100101	Anchor BS for TEMP_BS_ID = 0b101
100110	Anchor BS for TEMP_BS_ID = 0b110

Also, the codeword numbered 39 (i.e., 0b100111) is used as an acknowledgement for the Anchor BS Switch IE.

8.4.11.10 UEP fast-feedback

When the UEP fast-feedback is employed and the FFSH's Feedback Type field is 00 or the BS requests the feedback through CQICH_Alloc_IE() or CQICH_Control_IE(), the MS may report the feedback payload on the assigned CQICH by using the following UEP fast-feedback method. The UEP fast-feedback provides the payload bits carried by the fast-feedback channel with the unequal error protection (UEP) capability. The UEP fast-feedback repeats each payload bit according to a predefined repetition ratio, as illustrated in Figure 301. The repeated bit sequence is interleaved and used for binary DPSK modulation on the subcarriers for the fast-feedback channel.

When the 4-by-3 UL tile structure is used (see 8.4.6.2.1), the number of tiles in a channel, N, is 6 and the number of subcarriers in a tile, L, is 12. When the 3-by-3 UL tile structure is used (see 8.4.6.4.1), $N = 6$ and $L = 9$.

When the MS reports the measured S/N, each payload bit is repeated according to the predefined UEP ratio $R_0{:}R_1{:}R_2{:}R_3$, where R_0, R_1, R_2, and R_3 represent the repetition number for the first payload bit b_0 (MSB), the

second payload bit b_1, the third payload bit b_2, and the fourth payload bit b_3 (LSB), respectively. In case of the 4-bit CQI payload, a ratio of R_0:R_1:R_2:R_3 = 26:19:14:7 is used for the 4-by-3 UL tile structure, and R_0:R_1:R_2:R_3 = 19:14:10:5 is used for the 3-by-3 UL tile structure.

The repeated bit sequence is interleaved according to Equation (143) before binary DPSK modulation.

$$y = ((xR)/N)mod(R) + \lfloor x/N \rfloor \tag{143}$$

where

y denotes the bit index in the interleaved bit sequence (y = 0, 1, 2, c, R–1)
x denotes bit index in the repeated bit sequence (x = 0, 1, 2, c, R–1)

The length of the repeated bit sequence is $R = R_0 + R_1 + R_2 + R_3 = N(L–1) = 66$ for the 4-bit CQI. The interleaved bit sequence is divided into N groups and each group has L–1 bits. The n-th group (n=0, 1, $c_{N–1}$) is used for binary DPSK modulation on the subcarriers in the n-th UL tile, as shown in Figure 301. The first subcarrier in each tile is used as a phase reference. The L–1 bits in the n-th group are mapped to L DPSK symbols for the n-th tile as shown in Equation (144).

$$C_{n,k}^{CQI} = \begin{cases} 1 & (k = 0) \\ C_{n,k-1}^{CQI} & k > 0 \quad and \ (B_{n,k-1}^{CQI} = 0) \\ -C_{n,k-1}^{CQI} & k > 0 \quad and \ (B_{n,k-1}^{CQI} = 1) \end{cases} \tag{144}$$

where

$C_{n,k}^{CQI}$ is the mapping symbol of the k-th subcarrier of the n-th tile (k = 0, 1, …, L–1)

$B_{n,k}^{CQI}$ is the k-th bit of n-th group in the interleaved bit sequence (k = 0, 1, …, L–2)

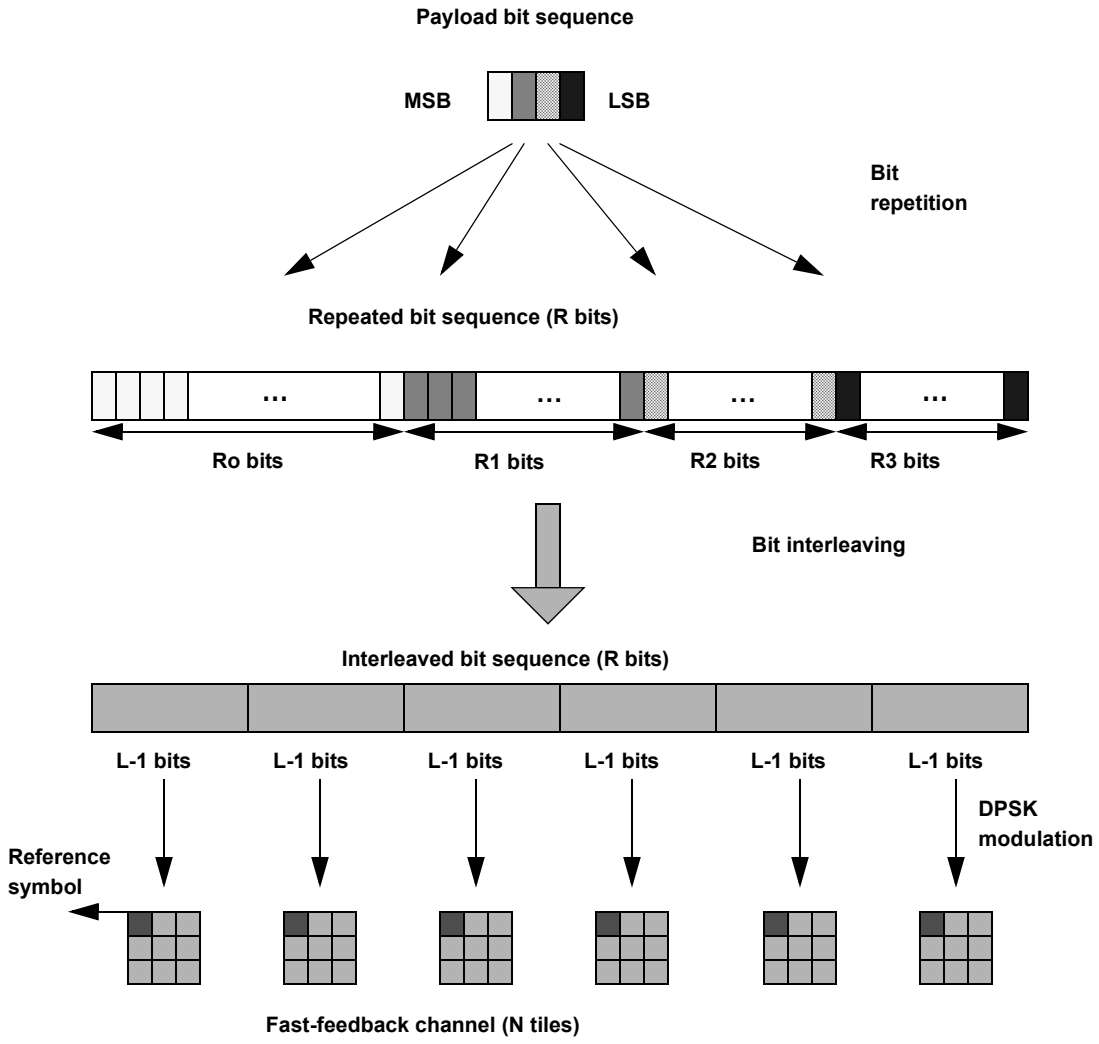

Figure 301—Mapping of the payload bit sequence to a fast-feedback channel

8.4.11.11 Band AMC differential CINR feedback for enhanced fast-feedback channel

When the band AMC operation is triggered, the MS shall report the differential of CINR for N selected bands (increment: 1 and decrement: 0 with a step of 1 dB) on its enhanced, primary fast-feedback channel or secondary fast-feedback channel. The first 2^N codewords are used. The differential reporting shall be in the order of the band indices with the LSBof the codeword referencing the band with the lowest index.

8.4.11.12 Indication flag feedback

For an MS that supports the feedback method using the feedback header, the MS can send an indication flag on the fast-feedback channel, the enhanced fast-feedback channel, or the primary/secondary fast-feedback channel. The indication flag is a specific encoding of the payload bits on the fast-feedback channel or the enhanced fast-feedback channel. The indication flag is used by the MS to indicate to the BS its intention to transmit a feedback header or a BR header without the need to perform BR ranging. After receiving the indication flag from the MS, the BS may allocate the required UL resource to the MS.

In order to maintain operation of link adaptation mechanisms at the BS and adequate CINR reporting, the MS shall not transmit the indication flag codeword on two consecutive CQICH allocations that are allocated to it.

For the case of fast-feedback channel or secondary fast-feedback changeful the Indication Flag feedback operation is enabled, the specific encoding of the payload bits is defined in the Use CQICH indication flag TLV. This specific encoding is reserved for the purpose of indication flag and shall not be used to send other feedback information (see 8.4.11.1).

For the case of enhanced fast-feedback channel or primary fast-feedback channel, the encoding of 0b111100 shall be used as the indication flag (see Table 524).

8.4.11.13 Primary and secondary fast-feedback channels

A primary fast-feedback slot consists of 1 OFDMA slots mapped in a manner similar to the mapping of normal UL data. A primary fast-feedback slot uses QPSK modulation on the 48 data subcarriers of UL PUSC tiles it contains, and can carry a data payload of 6 bits. The primary fast-feedback slot has identical mapping between the payload bit sequences and the subcarriers modulation as the enhanced fast-feedback 6-bit payload slot except null pilot subcarriers within the slot. (See Figure 302).

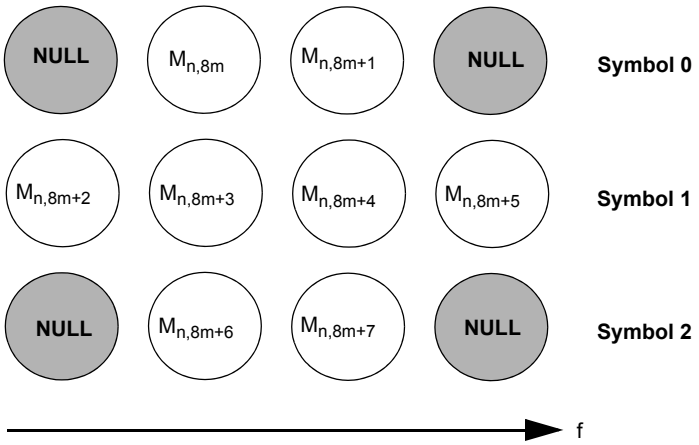

Figure 302—Subcarrier mapping of primary fast-feedback modulation symbol for PUSC

A secondary fast-feedback slot consists of one OFDMA slot mapped in a manner similar to the mapping of normal UL data. A secondary fast-feedback slot uses QPSK modulation on the 24 pilot subcarriers of UL PUSC tiles it contains, and can carry a data payload of 4 bits. Table 529 defines the mapping between the payload bit sequences and the subcarriers modulation.

Table 529—Secondary fast-feedback channel subcarrier modulation with 4 bit

Four-bit payload (binary)	Vector indices per tile Tile(0), Tile(1),Tile(2), Tile(3),Tile(4), Tile(5)	Four-bit payload (binary)	Vector indices per tile Tile(0), Tile(1),Tile(2), Tile(3),Tile(4), Tile(5)
0000	0,0,0,1,1,1	1000	0,0,1,3,2,2
0001	1,1,1,0,0,0	1001	1,3,2,2,3,1

Table 529—Secondary fast-feedback channel subcarrier modulation with 4 bit *(continued)*

Four-bit payload (binary)	Vector indices per tile Tile(0), Tile(1),Tile(2), Tile(3),Tile(4), Tile(5)	Four-bit payload (binary)	Vector indices per tile Tile(0), Tile(1),Tile(2), Tile(3),Tile(4), Tile(5)
0010	2,2,2,3,3,3	1010	2,2,3,1,0,0
0011	3,3,3,2,2,2	1011	3,3,1,0,1,1
0100	0,1,2,3,0,1	1100	0,0,3,2,0,3
0101	1,2,3,0,1,3	1101	1,2,0,2,2,0
0110	2,3,0,1,2,3	1110	2,1,3,3,1,2
0111	3,0,1,2,3,0	1111	3,2,2,1,1,2

The secondary fast-feedback channel is orthogonally modulated with QPSK symbols. Let $M_{n,4m+k}$ ($0 \le k \le 3$) be the modulation symbol index of the *k*-th modulation symbol in the *m*-th UL PUSC tile of the *n*-th secondary fast-feedback channel. The possible modulation patterns composed of $M_{n,4m+k}$ in the *m*-th tile of the *n*-th secondary fast-feedback channel are defined in Table 530.

Table 530—Orthogonal modulation index in secondary fast-feedback channel

Vector index	$\mathbf{M}_{n,4m}$, $\mathbf{M}_{n,4m+1}$, $\mathbf{M}_{n,4m+2}$, $\mathbf{M}_{n,4m+3}$
0	P0, P0, P0, P0
1	P0, P2, P0, P2
2	P0, P1, P2, P3
3	P1, P0, P3, P2

where

$$P_0 = \exp\left(j\frac{\pi}{4}\right)$$

$$P_1 = \exp\left(j\frac{3\pi}{4}\right)$$

$$P_2 = \exp\left(-j\frac{3\pi}{4}\right)$$

$$P_3 = \exp\left(-j\frac{\pi}{4}\right)$$

$M_{n,4m+k}$ are mapped to secondary fast-feedback channel tile as shown in Figure 303 for PUSC UL subchannel. A secondary fast-feedback channel is mapped to one subchannel composed of six tiles.

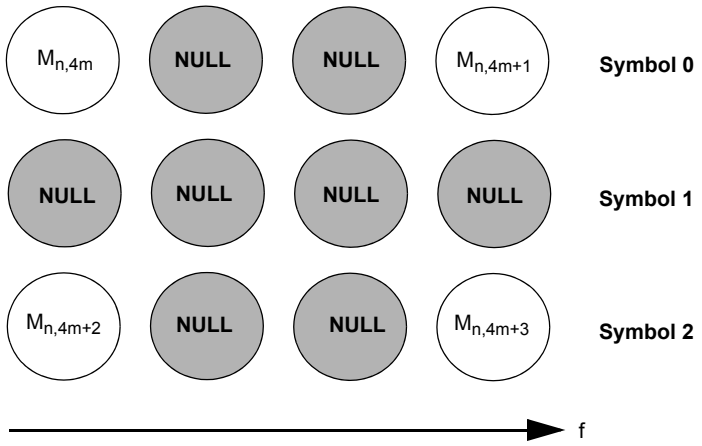

Figure 303—Subcarrier mapping of secondary fast-feedback modulation symbols for PUSC

8.4.11.14 Extended rtPS BR

If an MS has Extended rtPS connections, the MS may inform the serving BS of the existence of pending ertPS data. The codeword 0b111011 is used for that purpose. If the BS receives the codeword (i.e. 0b111011) on CQICH from the MS, the BS should allocate for the MS an UL burst corresponding to the largest Maximum Sustained Traffic Rate of the MS's stopped ertPS UL service flows. The connection for which the MS uses the UL allocation implicitly indicates the ertPS service flow to resume. The MS may alternatively include the ertPS resumption bitmap extended subheader (6.3.2.2.7.9) to indicate the ertPS service flows to resume.

8.4.11.15 MIMO feedback for Tx beamforming

Codebooks are defined for the feedback of MIMO Tx beamforming, whose codeword may be employed as the beamforming matrix in MIMO precoding in 8.4.8.3.6. The vector codebooks for 2x1, 3x1, and 4x1 with 3-bit feedback index are listed in Table 531, Table 532, and Table 533. The notation $V(N_t, S, L)$ denotes the vector codebook, which consists of 2^L complex, unit vectors of a dimension N_t, and S denotes the number of streams. The integer L is the number of bits required for the index that can indicate any vector in the codebook.

Table 531—*V*(2,1,3)

Vector index	1	2	3	4	5	6	7	8
v1	1	0.7940	0.7940	0.7941	0.7941	0.3289	0.5112	0.3289
v2	0	–0.5801 + *j*0.1818	0.0576 + *j*0.6051	–0.2978 – *j*0.5298	0.6038 + *j*0.0689	0.6614 + *j*0.6740	0.4754 – *j*0.7160	–0.8779 – *j*0.3481

Table 532—*V*(3,1,3)

Vector index	1	2	3	4	5	6	7	8
v1	1	0.500	0.500	0.500	0.500	0.4954	0.500	0.500
v2	0	–0.7201 – *j*0.3126	–0.0659 + *j*0.1371	–0.0063 + *j*0.6527	0.7171 + *j*0.3202	0.4819 – *j*0.4517	0.0686 – *j*0.1386	–0.0054 – *j*0.6540
v3	0	0.2483 – *j*0.2684	–0.6283 – *j*0.5763	0.4621 – *j*0.3321	–0.2533 + *j*0.2626	0.2963 – *j*0.4801	0.6200 + *j*0.5845	–0.4566 + *j*0.3374

Table 533—*V*(4,1,3)

Vector index	1	2	3	4	5	6	7	8
v1	1	0.3780	0.3780	0.3780	0.3780	0.3780	0.3780	0.3780
v2	0	–0.2698 – *j*0.5668	–0.7103 + *j*0.1326	0.2830 – *j*0.0940	–0.0841 + *j*0.6478	0.5247 + *j*0.3532	0.2058 – *j*0.1369	0.0618 – *j*0.3332
v3	0	0.5957 + *j*0.1578	–0.2350 – *j*0.1467	0.0702 – *j*0.8261	0.0184 + *j*0.0490	0.4115 + *j*0.1825	–0.5211 + *j*0.0833	–0.3456 + *j*0.5029
v4	0	0.1587 – *j*0.2411	0.1371 + *j*0.4893	–0.2801 + *j*0.0491	–0.3272 – *j*0.5662	0.2639 + *j*0.4299	0.6136 – *j*0.3755	–0.5704 + *j*0.2113

The codebooks in Table 531, Table 532, and Table 533 are produced by generating expressions one per table. These tables are optimized for generation efficiency and storage memory.

Three operations are employed and they employs floating point arithmetic in IEEE Std 754, whose final results are rounded to four decimal places. The first operation generates a unitary $N \times N$ matrix *H(v)* using an N vector v as shown in Equation (145).

$$H(\boldsymbol{v}) = \begin{cases} \mathbf{I}, & \boldsymbol{v} = \boldsymbol{e}_1 \\ \boldsymbol{I} - p\boldsymbol{w}\boldsymbol{w}^H, & otherwise \end{cases} \tag{145}$$

where

$\boldsymbol{w} = \boldsymbol{v} - \boldsymbol{e}_1$ and $\boldsymbol{e}_1$ is [1 0 ... 0]

$p = \dfrac{2}{\|\boldsymbol{w}^H \boldsymbol{w}\|}$

$\boldsymbol{I}$ is the $N \times N$ identity matrix

$()^H$ denotes the conjugate transpose operation

Two vector codebooks $V(3,1,6)$ and $V(4,1,6)$ are generated as follows. All the vector codewords $\boldsymbol{v}_i$, $i = 2, \ldots 2^L$ are derived from the first codeword $\boldsymbol{v}_1$ as follows:

$$\tilde{\boldsymbol{v}}_i = H(\boldsymbol{s})Q^{i-1}(\boldsymbol{u})H^H(\boldsymbol{s}) \cdot \boldsymbol{v}_1 \text{, for } i = 2, \ldots 2^L,$$

$\boldsymbol{v}_i = \tilde{\boldsymbol{v}}_i e^{-j\phi_1}$, for $i = 2, \ldots 2^L$,

where

$Q^i(\boldsymbol{u}) = diag\left(e^{j \cdot \frac{2\pi}{2^L} \cdot u_1 \cdot i}, \ldots, e^{j \cdot \frac{2\pi}{2^L} \cdot u_{N_t} \cdot i}\right)$ is a diagonal matrix

$\mathbf{u} = u = [u_1 \ldots u_{N_t}]$ is an integer vector

$\boldsymbol{v}_1 = \frac{1}{\sqrt{N_t}}\left[\begin{array}{cccc} 1 & e^{j \cdot \frac{2\pi}{N_t}} & \ldots & e^{j \cdot \frac{2\pi}{N_t} \cdot (N_t - 1)} \end{array}\right]^T$

ϕ_i is the phase of the first entry of $\tilde{v}_i$

The parameters for the generation of $V(3,1,6)$ and $V(4,1,6)$ are listed in Table 534.

Table 534—Generating parameters for *V*(3,1,6) and *V*(4,1,6)

$\mathbf{N_t}$	**L**	**u** in $Q^i(\mathbf{u})$	**s in H(s)**
3	6	[1 26 57]	[1.2518–-j0.6409, –0.4570–*j*0.4974, 0.1177+*j*0.2360]
4	6	[1 45 22 49]	$[1.3954–j0.0738, 0.0206+j0.4326, –0.1658–j0.5445, 0.5487–j0.1599]^T$

The second operation generates an N by $M + 1$ unitary matrix from a unit N vector and a unitary $N – 1$ by M matrix as shown in Equation (146):

$$HC(\boldsymbol{v}_N, \boldsymbol{A}_{(N-1)M}) = H(\boldsymbol{v}_N)\begin{bmatrix} 1 & 0 & \ldots & 0 \\ 0 & & & \\ \ldots & & & \\ 0 & & & \boldsymbol{A}_{(N-1)M} \end{bmatrix} \tag{146}$$

where

$N - 1 \geq M$; the $N – 1$ by M unitary matrix has property $\mathbf{A}^H\mathbf{A} = \mathbf{I}$.

The third operation generates an N by M matrix from a unit N vector, $\mathbf{v}_N$, by taking the last M columns of $H(\mathbf{v}_N)$ as shown in Equation (147).

$$HE(\boldsymbol{v}_N, M) = H(\boldsymbol{v}_N)_{:,N-M+1:N} \tag{147}$$

The fourth operation generates an N by 2 matrix from a unit N vector, v_N, by taking the first 2 columns of $H(v_N)$ as shown in Equation (148).

$$HF(\boldsymbol{v}_N) = H(\boldsymbol{v}_N)_{:,1:2} \tag{148}$$

The four operations jointly generate eleven matrix codebooks from vector codebooks as shown in Table 535, where each entry is the generating operation of one codebook.

Table 535 contains operations to generate codebooks $V(N_t,S,L)$ for N_t = 2, 3, 4, S = 2, 3, 4, and L = 3 and 6.

Table 535—Operations to generate codebooks

Nt, L \ S	2	3	4
2, 3	H(V(2,1,3))	—	—
3, 3	HE(V(3,5,3),2)	H(V(3,1,3))	—
4, 3	HF(V(4,1,3))	HE(V(4,1,3),3)	H(V(4,1,3))
3, 6	HC(V(3,1,3),V(2,1,3))	HC(V(3,1,3),H(V(2,1,3)))	—
4, 6	HC(V(4,1,3),V(3,1,3))	HE(V(4,1,6),3)	H(V(4,1,6))

The set notation $V(N_t,1,L)$ in the input arguments of the operations denotes that each vector in the codebook $V(N_t,1,L)$ is sequentially taken as an input to the operations. The output of the operation with one or more codebooks as input arguments is also a codebook. For example, in HC(V(3,1,3),H(V(2,1,3))) has two codebooks as input. The first is V(3,1,3) with 8 vectors and the second is H(V(2,1,3)) with 8 2x2 matrices, which are computed from V(2,1,3). The feedback index is constructed by sequentially concatenating all the indexes of the input argument vector codebooks in binary format. For example, the feedback index of HC(V(3,1,3),H(V(2,1,3))) is constructed as $i_2 j_2$, where i_2 and j_2 are the indexes of the vectors in codebooks V(3,1,3) and V(2,1,3) in binary format respectively.

Table 536, Table 537, Table 538, and Table 539 are included to illustrate codebooks generated using the rules defined above.

Table 536—3-bit 2x2 codebook *V*(2,2,3)

Matrix index (binary)	Column1	Column2	Matrix index (binary)	Column1	Column2
000	1	0	100	0.7941	0.6038 – j0.0689
	0	1		0.6038 + j0.0689	–0.7941
001	0.7940	–0.5801 – j0.1818	101	0.3289	0.6614 – j0.6740
	–0.5801 + j0.1818	–0.7940		0.6614 + j0.6740	–0.3289
010	0.7940	0.0576 – j0.6051	110	0.5112	0.4754 + j0.7160
	0.0576 + j0.6051	–0.7940		0.4754 - j0.7160	–0.5112
011	0.7941	–0.2978 + j0.5298	111	0.3289	–0.8779 + j0.3481
	–0.2978 – j0.5298	–0.7941		–0.8779 – j0.3481	–0.3289

Table 537—3-bit 4x3 codebook *V*(4,3,3)

Matrix index (binary)	Column1	Column2	Column3
000	0	0	0
	1	0	0
	0	1	0
	0	0	1
001	–0.2698 + j0.5668	0.5957 – j0.1578	0.1587 + j0.2411
	0.3665	0.4022 + j0.4743	–0.1509 + j0.2492
	0.4022 – j0.4743	0.3894	–0.0908 – j0.2712
	–0.1509 – j0.2492	–0.0908 + j0.2712	0.8660
010	–0.7103 – j0.1326	–0.2350 + j0.1467	0.1371 – j0.4893
	0.1606	–0.2371 + j0.2176	0.0522 – j0.5880
	–0.2371 – j0.2176	0.8766	0.1672 – j0.1525
	0.0522 + j0.5880	0.1672 + j0.1525	0.5848
011	0.2830 + j0.0940	0.0702 + j0.8261	–0.2801 – j0.0491
	0.8570	–0.1568 – j0.3653	0.1349 – j0.0200
	–0.1568 + j0.3653	–0.1050	0.0968 – j0.3665
	0.1349 + j0.0200	0.0968 + j0.3665	0.8700
100	–0.0841 – j0.6478	0.0184 – j0.0490	–0.3272 + j0.5662
	0.3140	–0.0485 – j0.0258	0.5454 + j0.4174
	–0.0485 + j0.0258	0.9956	0.0543 + j0.0090
	0.5454 – j0.4174	0.0543 – j0.0090	0.3125
101	0.5247 – j0.3532	0.4115 – j0.1825	0.2639 – j0.4299
	0.3569	–0.4508 – j0.0797	–0.4667 + j0.2128
	–0.4508 + j0.0797	0.6742	–0.3007 + j0.2070
	–0.4667 – j0.2128	–0.3007 – j0.2070	0.5910
110	0.2058 + j0.1369	–0.5211 – j0.0833	0.6136 + j0.3755
	0.9018	0.1908 – j0.0871	–0.2857 + j0.0108
	0.1908 + j0.0871	0.5522	0.5644 + j0.2324
	–0.2857 – j0.0108	0.5644 – j0.2324	0.1680
111	0.0618 + j0.3332	–0.3456 – j0.5029	–0.5704 – j0.2113
	0.8154	0.3037 – j0.1352	0.1698 – j0.2845
	0.3037 + j0.1352	0.4015	–0.4877 + j0.3437
	0.1698 + j0.2845	–0.4877 – j0.3437	0.4052

Table 538—3-bit 4x4 codebook *V*(4,4,3)

Matrix index (binary)	Column1	Column2	Column3	Column4
000	1	0	0	0
	0	1	0	0
	0	0	1	0
	0	0	0	1
001	0.3780	–0.2698 + j0.5668	0.5957 – j0.1578	0.1587 + j0.2411
	–0.2698 – j0.5668	0.3665	0.4022 + j0.4743	–0.1509 + j0.2492
	0.5957 + j0.1578	0.4022 – j0.4743	0.3894	–0.0908 – j0.2712
	0.1587 – j0.2411	–0.1509 – j0.2492	–0.0908 + j0.2712	0.8660
010	0.3780	–0.7103 – j0.1326	–0.2350 + j0.1467	0.1371 – j0.4893
	–0.7103 + j0.1326	0.1606	–0.2371 + j0.2176	0.0522 – j0.5880
	–0.2350 – j0.1467	–0.2371 – j0.2176	0.8766	0.1672 – j0.1525
	0.1371 + j0.4893	0.0522 + j0.5880	0.1672 + j0.1525	0.5848
011	0.3780	0.2830 + j0.0940	0.0702 + j0.8261	–0.2801 – j0.0491
	0.2830 – j0.0940	0.8570	–0.1568 – j0.3653	0.1349 – j0.0200
	0.0702 – j0.8261	–0.1568 + j0.3653	–0.1050	0.0968 – j0.3665
	–0.2801 + j0.0491	0.1349 + j0.0200	0.0968 + j0.3665	0.8700
100	0.3780	–0.0841 – j0.6478	0.0184 – j0.0490	–0.3272 + j0.5662
	–0.0841 + j0.6478	0.3140	–0.0485 – j0.0258	0.5454 + j0.4174
	0.0184 + j0.0490	–0.0485 + j0.0258	0.9956	0.0543 + j0.0090
	–0.3272 – j0.5662	0.5454 – j0.4174	0.0543 – j0.0090	0.3125
101	0.3780	0.5247 – j0.3532	0.4115 – j0.1825	0.2639 – j0.4299
	0.5247 + j0.3532	0.3569	–0.4508 – j0.0797	–0.4667 + j0.2128
	0.4115 + j0.1825	–0.4508 + j0.0797	0.6742	–0.3007 + j0.2070
	0.2639 + j0.4299	–0.4667 – j0.2128	–0.3007 – j0.2070	0.5910
110	0.3780	0.2058 + j0.1369	–0.5211 – j0.0833	0.6136 + j0.3755
	0.2058 – j0.1369	0.9018	0.1908 – j0.0871	–0.2857 + j0.0108
	–0.5211 + j0.0833	0.1908 + j0.0871	0.5522	0.5644 + j0.2324
	0.6136 – j0.3755	–0.2857 – j0.0108	0.5644 – j0.2324	0.1680
111	0.3780	0.0618 + j0.3332	–0.3456 – j0.5029	–0.5704 – j0.2113
	0.0618 – j0.3332	0.8154	0.3037 – j0.1352	0.1698 – j0.2845
	–0.3456 + j0.5029	0.3037 + j0.1352	0.4015	–0.4877 + j0.3437
	–0.5704 + j0.2113	0.1698 + j0.2845	–0.4877 – j0.3437	0.4052

Table 539—6-bit, 3x1 codebook *V*(3,1,6)

Vector index (binary)	Column1	Vector index (binary)	Column1
000000	0.5774	100000	0.5437
	–0.2887 + j0.5000		–0.1363 – j0.4648
	–0.2887 – j0.5000		0.4162 + j0.5446
000001	0.5466	100001	0.5579
	0.2895 – j0.5522		–0.6391 + j0.3224
	0.2440 + j0.5030		–0.2285 – j0.3523
000010	0.5246	100010	0.5649
	–0.7973 – j0.0214		0.6592 – j0.3268
	–0.2517 – j0.1590		0.1231 + j0.3526
000011	0.5973	100011	0.484
	0.7734 + j0.0785		–0.6914 – j0.3911
	0.1208 + j0.1559		–0.3669 + j0.0096
000100	0.4462	100100	0.6348
	–0.3483 – j0.6123		0.5910 + j0.4415
	–0.5457 + j0.0829		0.2296 – j0.0034
000101	0.6662	100101	0.4209
	0.2182 + j0.5942		0.0760 – j0.5484
	0.3876 – j0.0721		–0.7180 + j0.0283
000110	0.412	100110	0.6833
	0.3538 – j0.2134		–0.1769 + j0.4784
	–0.8046 – j0.1101		0.5208 – j0.0412
000111	0.684	100111	0.4149
	–0.4292 + j0.1401		0.3501 + j0.2162
	0.5698 + j0.0605		–0.7772 – j0.2335
001000	0.4201	101000	0.6726
	0.1033 + j0.5446		–0.4225 – j0.2866
	–0.6685 – j0.2632		0.5061 + j0.1754
001001	0.6591	101001	0.419
	–0.1405 – j0.6096		–0.2524 + j0.6679
	0.3470 + j0.2319		–0.5320 – j0.1779

Table 539—6-bit, 3x1 codebook *V*(3,1,6) *(continued)*

Vector index (binary)	Column1	Vector index (binary)	Column1
001010	0.407	101010	0.6547
	–0.5776 + j0.5744		0.2890 – j0.6562
	–0.4133 + j0.0006		0.1615 + j0.1765
001011	0.6659	101011	0.3843
	0.6320 – j0.3939		–0.7637 + j0.3120
	0.0417 + j0.0157		–0.3465 + j0.2272
001100	0.355	101100	0.69
	–0.7412 – j0.0290		0.6998 + j0.0252
	–0.3542 + j0.4454		0.0406 – j0.1786
001101	0.7173	101101	0.3263
	0.4710 + j0.3756		–0.4920 – j0.3199
	0.1394 – j0.3211		–0.4413 + j0.5954
001110	0.307	101110	0.7365
	–0.0852 – j0.4143		0.0693 + j0.4971
	–0.5749 + j0.6295		0.2728 – j0.3623
001111	0.74	101111	0.3038
	–0.3257 + j0.3461		0.3052 – j0.2326
	0.3689 – j0.3007		–0.6770 + j0.5496
010000	0.3169	110000	0.727
	0.4970 + j0.1434		–0.5479 – j0.0130
	–0.6723 + j0.4243		0.3750 – j0.1748
010001	0.7031	110001	0.3401
	–0.4939 – j0.4297		0.4380 + j0.5298
	0.2729 – j0.0509		–0.5470 + j0.3356
010010	0.3649	110010	0.6791
	0.1983 + j0.7795		–0.1741 – j0.7073
	–0.3404 + j0.3224		0.0909 – j0.0028
010011	0.6658	110011	0.3844
	0.2561 – j0.6902		–0.1123 + j0.8251
	–0.0958 – j0.0746		–0.1082 + j0.3836

Table 539—6-bit, 3x1 codebook *V*(3,1,6) *(continued)*

Vector index (binary)	Column1	Vector index (binary)	Column1
010100	0.3942	110100	0.6683
	–0.3862 + j0.6614		0.5567 – j0.3796
	0.0940 + j0.4992		–0.2017 – j0.2423
010101	0.6825	110101	0.394
	0.5632 + j0.0490		–0.5255 + j0.3339
	–0.1901 – j0.4225		0.2176 + j0.6401
010110	0.3873	110110	0.6976
	–0.4531 – j0.0567		0.2872 + j0.3740
	0.2298 + j0.7672		–0.0927 – j0.5314
010111	0.7029	110111	0.3819
	–0.1291 + j0.4563		–0.1507 – j0.3542
	0.0228 – j0.5296		0.1342 + j0.8294
011000	0.387	111000	0.6922
	0.2812 – j0.3980		–0.5051 + j0.2745
	–0.0077 + j0.7828		0.0904 – j0.4269
011001	0.6658	111001	0.4083
	–0.6858 – j0.0919		0.6327 – j0.1488
	0.0666 – j0.2711		–0.0942 + j0.6341
011010	0.4436	111010	0.6306
	0.7305 + j0.2507		–0.5866 – j0.4869
	–0.0580 + j0.4511		–0.0583 – j0.1337
011011	0.5972	111011	0.4841
	–0.2385 – j0.7188		0.5572 + j0.5926
	–0.2493 – j0.0873		0.0898 + j0.3096
011100	0.5198	111100	0.5761
	0.2157 + j0.7332		0.1868 – j0.6492
	0.2877 + j0.2509		–0.4292 – j0.1659
011101	0.571	111101	0.5431
	0.4513 – j0.3043		–0.1479 + j0.6238
	–0.5190 – j0.3292		0.4646 + j0.2796

Table 539—6-bit, 3x1 codebook *V*(3,1,6) *(continued)*

Vector index (binary)	Column1	Vector index (binary)	Column1
011110	0.5517	111110	0.5764
	–0.3892 + j0.3011		0.4156 + j0.1263
	0.5611 + j0.3724		–0.4947 – j0.4840
011111	0.5818	111111	0.549
	0.1190 + j0.4328		–0.3963 – j0.1208
	–0.3964 – j0.5504		0.5426 + j0.4822

8.4.11.16 MAP ACK Channel

Each MAP ACK channel occupies one fast feedback slot. The MAP ACK channel shall be individually assigned to the MS for transmitting an acknowledgement of the receipt of the respective Persistent HARQ DL MAP IE (8.4.5.3.29), the Persistent HARQ UL MAP IE (8.4.5.4.28) or H-FDD group switch instructions (8.4.4.2.1). The transmission takes place in a specific UL region designated by the UIUC=0.

Each MAP ACK channel shall consist of 1 OFDMA slot mapped in a manner similar to UL data. A MAP ACK channel slot uses QPSK modulation on the 48 data subcarriers it contains and carries a data payload of 1 bit. Table 540 defines the mapping between the payload bit sequence and the subcarriers modulation.

Table 540—MAP ACK Channel subcarrier modulation

1 bit payload	MAP ACK vector indices per tile Tile(0), Tile(1), ... Tile(5)
0	0,0,0,0,0,0

8.4.11.17 MAP NACK Channel

Each MAP NACK channel occupies one fast feedback slot. The MAP NACK channel shall be individually assigned to the MS for transmitting an indication of a MAP decoding error. The transmission takes place in a specific UL region designated by the UIUC=0.

Each MAP NACK channel shall consist of 1 OFDMA slot mapped in a manner similar to UL data. A MAP NACK channel slot uses QPSK modulation on the 48 data subcarriers it contains and carries a data payload of 1 bit. Table 541 defines the mapping between the payload bit sequence and the subcarriers modulation.

Table 541—MAP NACK Channel subcarrier modulation

1 bit payload	MAP NACK vector indices per tile Tile(0), Tile(1), ... Tile(5)
0	0,0,0,0,0,0

8.4.12 Channel quality measurements

8.4.12.1 Introduction

RSSI and CINR signal quality measurements and associated statistics can aid in such processes as BS selection/assignment and burst adaptive profile selection. As channel behavior is time-variant, both mean and standard deviation are defined. Implementation of the RSSI and CINR statistics and their reports is mandatory.

The process by which RSSI measurements are taken does not necessarily require receiver demodulation lock; for this reason, RSSI measurements offer reasonably reliable channel strength assessments even at low signal levels. On the other hand, although CINR measurements require receiver lock, they provide information on the actual operating condition of the receiver, including interference and noise levels, and signal strength.

8.4.12.2 RSSI mean and standard deviation

When collection of RSSI measurements is mandated by the BS, an SS shall obtain an RSSI measurement (implementation-specific). From a succession of RSSI measurements, the SS shall derive and update estimates of the mean and the standard deviation of the RSSI, and report them via REP-RSP messages.

Mean and standard deviation statistics shall be reported in units of dBm and dB, respectively. To prepare such reports, statistics shall be quantized in 1 dB increments, ranging from –40 dBm (encoded 0x53) to –123 dBm (encoded 0x00). Values outside this range shall be assigned the closest extreme value within the scale.

The method used to estimate the RSSI of a single message is left to individual implementation, but the relative accuracy of a single signal strength measurement, taken from a single message, shall be ± 2 dB, with an absolute accuracy of ± 4 dB. This shall be the case over the entire range of input RSSIs. In addition, the range over which these single-message measurements are measured should extend 3 dB on each side beyond the –40 dBm to –123 dBm limits for the final averaged statistics that are reported.

One possible method to estimate the RSSI of a signal of interest at the antenna connector is given by Equation (149).

$$RSSI = 10^{-\frac{G_{rf}}{10}} \frac{1.2567 \times 10^4 V_c^2}{(2^{2B})R} \left(\frac{1}{N} \sum_{n=0}^{N-1} \left| Y_{\mathrm{I\ or\ Q}}[k, n] \right| \right)^2 \mathrm{mW} \tag{149}$$

where

B is ADC precision, number of bits of ADC
R is ADC input resistance (Ω)
V_c is ADC input clip level (V)
G_{rt} is analog gain from antenna connector to ADC input
$Y_{I\ or\ Q}[k,n]$ is n-th sample at the ADC output of I or Q-branch within signal k
N is number of samples

The (linear) mean RSSI statistics (in milliwatts), derived from a multiplicity of single messages, shall be updated using Equation (150).

$$_{SI}[k] = \begin{cases} R[0] & k = 0 \\ (1 - \alpha_{\mathrm{avg}})\hat{\mu}_{RSSI}[k-1] + \alpha_{\mathrm{avg}} R[k] & k > 0 \end{cases} \quad \mathrm{mW} \tag{150}$$

where

k is the time index for the message (with the initial message being indexed by $k = 0$, the next message by $k = 1$, etc.)

$R[k]$ is the RSSI in mW measured during message k, and α_{avg} is an averaging parameter specified by the BS

The mean estimate in dBm shall then be derived from Equation (151).

$$\hat{\mu}_{RSSI\ \mathrm{dBm}}[k] = 10\log(\hat{\mu}_{RSSI}[k]) \quad \mathrm{dBm} \tag{151}$$

To solve for the standard deviation in dB, the expectation-squared statistic shall be updated using Equation (152),

$$\hat{x}^2_{RSSI}[k] = \begin{cases} |R[0]|^2 & k = 0 \\ (1-\alpha_{avg})\hat{x}^2_{RSSI}[k-1] + \alpha_{avg}|R[k]|^2 & k > 0 \end{cases} \quad (\mathrm{mW})^2 \tag{152}$$

and the result applied to Equation (153).

$$\hat{\sigma}_{RSSI\ \mathrm{dB}} = 5\log(\left|\hat{x}^2_{RSSI}[k] - (\hat{\mu}_{RSSI}[k])^2\right|) \quad \mathrm{dB} \tag{153}$$

The message time index is incremented every frame. The reported RSSI value shall be an estimate of the received signal strength of the frame preamble of the associated segment of the particular BS.

8.4.12.3 CINR mean and standard deviation

When physical CINR measurements are mandated by the BS, an SS shall obtain a CINR measurement (implementation-specific). From a succession of these measurements, the SS shall derive and update estimates of the mean and/or the standard deviation of the CINR and report them via REP-RSP messages and/or report the estimate of the mean of the physical CINR via the fast-feedback channel (CQICH).

For the REP-RSP, the following encoding shall be used unless different encoding scheme is defined. Mean and standard deviation statistics for CINR shall be reported in units of decibels. To prepare such reports, statistics shall be quantized in 1 dB increments, ranging from a minimum of –10 dB (encoded 0x00) to a maximum of 53 dB (encoded 0x3F). Values outside this range shall be assigned the closest extreme value within the scale.

The method used to estimate the CINR of a single message is left to individual implementation, but the relative and absolute accuracy of a CINR measurement derived from a single message shall be ± 1 dB and ± 2 dB, respectively. The specified accuracy shall apply to the range of CINR values starting from 3 dB below SNR of the most robust rate to 10 dB above the SNR of the least robust rate. See Table 545 in 8.4.14.1.1.

If a physical CINR report from the preamble was instructed, then the reported CINR shall be an estimate of the CINR over the subcarriers of the preamble. For the frequency reuse configuration = 3 type, the reported CINR shall be the estimate of the CINR over the modulated subcarriers of the preamble. For the frequency reuse configuration = 1, the reported CINR shall be the estimate of the average CINR over all subcarriers of the preamble except the guard subcarriers and the DC subcarriers. In other words, the signal on the unmodulated subcarriers (except the guard subcarriers and the DC subcarriers) shall also be considered as noise and interference for the CINR estimate of the frequency reuse configuration = 1. The reported value

shall represent the average CINR on nonboosted data subcarriers of the first zone in the frame; hence preamble boosting shall be compensated for in both desired signal and interference/noise calculation.

If a physical CINR measurement is made for the purpose of computing a scan or handover trigger (Table 577) the CINR metric for the serving BS and the neighbor BS shall be estimates of the physical CINR measured on the preambles. For the serving BS, the physical CINR shall be computed according to the reuse factor indicated in the MOB_NBR-ADV "Reuse factor for SBS CINR calculation for scan and handover" field (Table 144). For the neighbor BS the physical CINR shall be computed according to the reuse factor indicated in MOB_NBR-ADV "Preamble Index/Subchannel Index" field (Table 144). The reuse factor indicated in the MOB_NBR-ADV "Preamble Index/Subchannel Index" field (Table 144) for each advertised neighbor BS shall be the same as the "Reuse factor for SBS CINR calculation for scan and handover" indicated by that neighbor BS in its MOB_NBR-ADV. After the MS performs handover to a new serving BS, it shall compute physical CINR for scan and handover purposes using the reuse factor indicated in the MOB_NBR-ADV "Preamble Index/Subchannel Index" field advertised by the previous serving BS until it receives a MOB_NBR-ADV from the new serving BS.

In case a physical CINR report on a specific permutation zone was instructed, then the reported value shall represent the average CINR on nonboosted data subcarriers of the zone on which measurement was requested; hence pilot boosting shall be compensated for in both desired signal and interference/noise calculation.

In case a physical CINR report on an STC zone is instructed, the SS shall report the average post-combined CINR.

In addition, the range over which these single-packet measurements are measured should extend 3 dB on each side beyond the –10 dB to 53 dB limits for the final reported, averaged statistics.

One possible method to estimate the CINR of a single message is to compute the ratio of the sum of signal power and the sum of residual error for each data sample, using Equation (154).

$$\mathrm{CINR}[k] = \frac{\sum_{n=0}^{N-1} |s[k,n]|^2}{\sum_{n=0}^{N-1} |r[k,n] - s[k,n]|^2} \tag{154}$$

where

$r[k,n]$ is the received sample n within message measured at time index k in frame units
$s[k,n]$ is the corresponding detected or pilot sample (with channel state weighting)

The message time index is incremented every frame. The SS shall maintain separate message time index counters and mean CINR estimates for REP-RSP-based reports and for fast-Feedback-based reports. When the CINR configuration is changed (i.e., CINR report configuration in a CQICH IE or REP-REQ message differs from the previous CQICH IE or REP-REQ, respectively), the SS shall reset the corresponding message time index to zero.

When the MS is required to measure CINR for handover, the mean CINR statistic (in dB) shall be derived from a multiplicity of single messages using Equation (155).

$$\hat{\mu}_{\mathrm{CINR\ dB}}[k] = 10\log(\hat{\mu}_{\mathrm{CINR}}[k]) \tag{155}$$

where

$$\hat{\mu}_{\text{CINR}}[k] = \begin{cases} \text{CINR}[0] & k = 0 \\ (1-\alpha_{\text{avg}})\hat{\mu}_{\text{CINR}}[k-1] + \alpha_{\text{avg}}\,\text{CINR}[k] & k > 0 \end{cases} \tag{156}$$

CINR[k] is a linear measurement of CINR (derived by any mechanism that delivers the prescribed accuracy) for message k

α_{avg} is an averaging parameter specified by the BS

For CINR report via CQICH, REP-RSP, and Feedback Header for link adaptation, the MS shall derive mean CINR (in dB) using Equation (157).

$$\hat{\mu}_{\text{CINR dB}}[k] = 10\log(\hat{\mu}_{\text{CINR}}[k]) \tag{157}$$

where

$$\hat{\mu}_{\text{CINR}}[k] = \begin{cases} \text{CINR}[0] & k = 0 \\ (1-\alpha_{\text{avg}})^{n+1}\hat{\mu}_{\text{CINR}}[k-1] + (1-(1-\alpha_{\text{avg}})^{n+1})\,\text{CINR}[k] & k > 0 \end{cases} \tag{158}$$

CINR[k] is a linear measurement of CINR for the *k-th* measurement; and n is number of consecutive frames in which no measurement is made. In frames where no measurement is made, the MS shall report the latest averaged results.

To solve for the standard deviation, if logarithmic CINR calculation is not enabled (see 11.8.3.5.19), the expectation-squared statistic shall be updated using Equation (159).

$$\hat{x}^2_{\text{CINR}}[k] = \begin{cases} |\text{CINR}[0]|^2 & k = 0 \\ (1-\alpha_{\text{avg}})\hat{x}^2_{\text{CINR}}[k-1] + \alpha_{\text{avg}}|\text{CINR}[k]|^2 & k > 0 \end{cases} \tag{159}$$

and the result applied to

$$\hat{\sigma}_{\text{CINR dB}} = 5\log(\left|\hat{x}^2_{\text{CINR}}[k] - (\hat{\mu}_{\text{CINR}}[k])^2\right|) \quad \text{dB} \tag{160}$$

CINR[k] is a linear measurement of CINR for the *k-th* measurement; and n is number of consecutive frames in which no measurement is made. In frames where no measurement is made, the MS shall report the latest averaged results.

If logarithmic CINR standard deviation calculation is enabled (see 11.8.3.5.19), the MS shall calculate the standard deviation in decibel format using Equation (161) through Equation (163).

1) Compute the first moment of CINR using Equation (161) as:

$$\hat{x}^2_{\text{CINR dB}}[k] = \begin{cases} \text{CINR}_{dB}[0] & k = 0 \\ (1-\alpha_{\text{avg}})^{n+1}\hat{x}^2_{\text{CINR dB}}[k-1] + (1-(1-\alpha_{\text{avg}})^{n+1})\text{CINR}_{dB}[k] & k > 0 \end{cases} \tag{161}$$

where n is number of consecutive frames in which no measurement is made, and $\mathrm{CINR}_{dB}[k] = 10\log_{10}(\mathrm{CINR}[k])$.

2) Compute the second moment of CINR using Equation (162) as follows:

$$\hat{x}^2_{\mathrm{CINR\ dB}}[k] = \begin{cases} (\mathrm{CINR}_{dB}[0])^2 & k = 0 \\ (1-\alpha_{\mathrm{avg}})^{n+1}\hat{x}^2_{\mathrm{CINR\ dB}}[k-1] + (1-(1-\alpha_{\mathrm{avg}})^{n+1})(\mathrm{CINR}_{dB}[k])^2 & k > 0 \end{cases} \tag{162}$$

3) Compute the standard deviation using Equation (163) as follows:

$$\hat{\sigma}_{\mathrm{CINR\ dB}} = \sqrt{\hat{x}^2_{\mathrm{CINR\ dB}}[k] - (\hat{x}_{\mathrm{CINR\ dB}}[k])^2} \tag{163}$$

The averaging parameter (α_{avg}) for CINR measurement may be sent as a DCD Message TLV 21 for physical CINR averaging. The averaging parameter α_{avg} for HO CINR measurement may be sent as DCD Message TLV 121 for HO CINR averaging. Unless specified otherwise, the default averaging parameter (α_{avg}) is 1/4. When the averaging parameter (α_{avg}) is given to an SS through REP-REQ, this value shall be used only for deriving physical CINR estimates reported through REP-RSP and can be changed further only through another REP-REQ message. When the averaging parameter is given to an SS through CQICH Allocation IE, this value shall be used only for deriving physical CINR estimates reported through fast-feedback channel (CQICH) and can be changed further only through another CQICH Allocation IE. An averaging parameter value sent through DCD shall not override the averaging parameter value sent in a dedicated REP-REQ message or a CQICH Allocation IE.

8.4.12.4 Optional frequency selectivity characterization

In order to characterize the relationship between channel frequency selectivity and link performance in a compact form, the parameters of an effective CINR versus weighting parameter β curve can be sent from the SS to the BS using an unsolicited REP-RSP TLV. When requested by the BS, the SS shall compute a quadratic approximation of an effective CINR (dB) vs. β dB = 10log(β) curve. The quadratic approximation is represented as: effective-CINR dB(β dB) = $a+b\times\beta$ dB + $c\times\beta^2$dB. Where a, b, and c are the Y-intercept, linear, and quadratic parameters, respectively, that are to be estimated by the SS. The quadratic approximation is derived by performing a curve fit to an experimentally derived effective CINR versus β curve.

8.4.13 Transmitter requirements

8.4.13.1 Tx power level control

The transmitter shall support monotonic power level control of 45 dB (30 dB for license-exempt bands) minimum with single step size accuracy requirement specified in Table 542.

Table 542—Single step size relative accuracy

Single step size m	Required relative accuracy
|m| = 1dB	± 0.5 dB
|m| = 2dB	± 1 dB
|m| = 3dB	± 1.5 dB
4dB < |m| ≤ 10dB	± 2 dB

Two exception points of at least 10 dB apart are allowed over the 45 dB range, where in these two points an accuracy of up to ± 2 dB is allowed for any size step.

8.4.13.2 Transmitter spectral flatness

All requirements on the transmitter apply to the RF output connector of the equipment. For equipment with integral antenna only, a reference antenna with 0 dBi gain shall be assumed.

The average energy of the constellations in each of the *n* spectral lines shall deviate no more than indicated in Table 543. The absolute difference between adjacent subcarriers shall not exceed 0.4 dB; excluding intentional boosting or suppression of subcarriers, CSIT sounding symbols and PAPR reduction subchannels are not allocated.

Table 543—Spectral flatness

Spectral lines	Spectral flatness
Spectral lines from $-N_{used}/4$ to –1 and +1 to $N_{used}/4$	±2 dB from the measured energy averaged over all N_{used} active tones
Spectral lines from $-N_{used}/2$ to $-N_{used}/4$ and $+N_{used}/4$ to $N_{used}/2$	+2/–4 dB from the measured energy averaged over all N_{used} active tones

The power transmitted at spectral line 0 shall not exceed –15 dB relative to total transmitted power.

These data shall be taken from the channel estimation step.

8.4.13.3 Transmitter constellation error and test method

To ensure that the receiver SNR does not degrade more than 0.5 dB due to the transmitter SNR, the relative constellation RMS error, averaged over subcarriers, OFDMA frames, and packets, shall not exceed a burst profile dependent value according to Table 544. When measuring the transmitter constellation error, it should be noted that if multiple permutation zones are present in a DL subframe, the pilot level may shift when transitioning from zone to zone as the BS attempts to maintain constant power density throughout the frame.

Table 544—Allowed relative constellation error versus data rate

Burst type	Relative constellation error for SS (dB)	Relative constellation error for BS (dB)
QPSK-1/2	–15	–15
QPSK-3/4	–18	–18
16-QAM-1/2	–20.5	–20.5
16-QAM-3/4	–24	–24
64-QAM-1/2	–26	–26
64-QAM-2/3	–28	–28
64-QAM-3/4	–30	–30

All measurement errors taken together shall be 10 dB less than the required noise level, i.e., if a specification is TX S/N = 10 dB, the measurement S/N should be at least 20 dB. For all PHY modes, measurements shall be taken with all nonguard subcarriers active and no PAPR reduction subchannels used.

8.4.13.3.1 RMS constellation error measurement for BS (DL)

The test may be performed in any permutation zone like PUSC. The sampled signal shall be processed in a manner similar to an actual receiver, according to the following steps:

a) The BS under test shall transmit all subchannels defined in the symbol structure (see 8.4.6).
b) Locate the Preamble.
c) Perform timing and frequency estimation.
d) Compensate the timing offset as estimated.
e) The received signal shall be de-rotated according to estimated frequency offset.
f) The complex channel response coefficients shall be estimated for each of the subcarriers.
g) Divide each subcarrier value by the complex estimated channel response coefficient.
h) For each data-carrying subcarrier, find the closest constellation point and compute the Euclidean distance from it.
i) Compute the RMS average of all errors in a packet, given by Equation (164).

8.4.13.3.2 RMS constellation error measurement for SS

The sampled signal shall be processed in a manner similar to an actual receiver, according to the following steps:

a) The SS under test shall transmit on part of the UL subchannels. Recommended value is 1/4 of the UL subchannels.
b) The tester will locate a complete UL subframe.
c) Perform timing and frequency estimation.
d) Compensate the timing offset as estimated.
e) The received signal shall be de-rotated according to estimated frequency offset.
f) Estimate the average channel according to the all transmitted subcarriers.
g) Divide each subcarrier value with a complex estimated channel response coefficient.
h) For each data-carrying subcarrier, find the closest constellation point and compute the Euclidean distance from it.
i) Compute the RMS average of all errors in a packet. It is given by Equation (164).
j) Normal RMS constellation error measurement shall be performed in scenarios where the number of modulated subcarriers is constant across symbols.
k) In case the number of subcarriers varies between symbols, it is recommended to measure RMS constellation error separately for symbols with different power levels.

8.4.13.3.3 Calculation of RMS constellation error

The RMS constellation error is calculated using Equation (149).

$$\text{Error}_{RMS}{}^2 = \frac{1}{N_f}\sum_{i=1}^{N_f}\frac{\sum_{j=1}^{L_P}\sum_{k\in S}[(I(i,j,k)-I_0(i,j,k))^2+(Q(i,j,k)-Q_0(i,j,k))^2]}{\sum_{j=1}^{L_P}\sum_{k\in S}[I_0(i,j,k)^2+Q_0(i,j,k)^2]} \tag{164}$$

where

L_P is the length of the packet
N_f is the number of frames for the measurement
(I_0 (*i*,*j*,k), Q_0 (*i*,*j*,k))denotes the ideal symbol point of the *i*-th frame, *j*-th OFDMA symbol of the frame, *k*-th subcarrier of the OFDMA symbol in the complex plane
(I(*i*,*j*,k), Q(*i*,*j*,k))denotes the observed point of the *i*-th frame, *j*-th OFDMA symbol of the frame
k-th is the subcarrier of the OFDMA symbol in the complex plane
S is the group of modulated data subcarriers where the measurement is performed

8.4.13.3.4 Unmodulated subcarrier errors for SS

Unmodulated subcarrier errors is a measure of the amount of noise emitted by the SS on the unmodulated subcarriers (within the used subcarriers range). The measure is relative to the power emitted by the SS on the modulated subcarriers.

a) The SS under test shall transmit on part of the UL subchannels.
b) The tester will locate a complete UL subframe.
c) Perform timing and frequency estimation.
d) Compensate the timing offset as estimated.
e) The received signal shall be de-rotated according to estimated frequency offset.
f) The unmodulated subcarrier errors (relative to the transmitted power) shall be measured according to Equation (165).
g) The value of the unmodulated subcarrier error shall not exceed the maximum values defined in Table 544 and $10 \times \log_{10}(S_u/S)$.

$$\text{Error}_{RMS}{}^2 = \frac{1}{N_f}\sum_{i=1}^{N_f}\frac{\sum_{j=1}^{L_P}\sum_{k\in S_u}[I(i,j,k)^2+Q(i,j,k)^2]}{\sum_{j=1}^{L_P}\sum_{k\in S}[I_0(i,j,k)^2+Q_0(i,j,k)^2]} \tag{165}$$

where

L_P is the length of the packet
N_f is the number of frames for the measurement
(I_0 (*i*,*j*,k), Q_0 (*i*,*j*,k))denotes the ideal symbol point of the *i*-th frame, *j*-th OFDMA symbol of the frame, *k*-th subcarrier of the OFDMA symbol in the complex plane
(I(*i*,*j*,k), Q(*i*,*j*,k))denotes the observed point of the *i*-th frame, *j*-th OFDMA symbol of the frame
k-th is the subcarrier of the OFDMA symbol in the complex plane
S is the group of modulated data subcarriers where the measurement is performed

S_u is the group of the unmodulated data subcarriers. It includes all subcarriers in the range 0 ... $N_{used}-1$, except the DC subcarrier and the modulated subcarriers (in S)

8.4.13.4 Transmitter reference timing accuracy

At the BS, the transmitted DL radio frame shall be time-aligned with the 1pps timing pulse (8.4.10.1.1). The start of the preamble symbol, excluding the CP duration, shall be time aligned with 1pps timing pulse when measured at the antenna port.

At the MS, upon close-loop adjustments of Tx and Rx timings from BS through CDMA ranging methods during network entry and periodic ranging, the MS obtains the system time reference. Thereafter, the MS shall maintain the relative time reference when measured at the antenna port.

8.4.14 Receiver requirements

All requirements on the receiver apply to the RF input connector of the equipment. For equipment with internal antennas only, a reference antenna with 0 dBi gain shall be assumed.

8.4.14.1 OFDMA PHY requirements for enhanced HO performance

8.4.14.1.1 Receiver sensitivity

The BER measured after FEC shall be less than 10^{-6} at the power levels given by Equation (166) for standard message and test conditions. The minimum input levels are measured as follows:

— Using the defined standardized message packet formats.
— Using an AWGN channel.

The receiver minimum sensitivity level, R_{SS}, is derived according to Equation (166).

$$R_{SS} = -114 + SNR_{Rx} - 10 \times \log_{10}(R) + 10 \times \log_{10}\left(\frac{F_S \times N_{Used} \times 10^{-6}}{N_{FFT}}\right) + ImpLoss + NF \quad (166)$$

where

SNR_{Rx} is the receiver SNR as per Table 545
R is the repetition factor as described in 8.4.9
F_S is the sampling frequency in Hz
$ImpLoss$ is the implementation loss, which includes nonideal receiver effects such as channel estimation errors, tracking errors, quantization errors, and phase noise. The assumed value is 5 dB.

NF is the receiver noise figure, referenced to the antenna port. The assumed value is 8 dB.

Table 545—Receiver SNR assumptions

Modulation	Coding rate	Receiver SNR (dB)
QPSK	1/2	5
	3/4	8
16-QAM	1/2	10.5
	3/4	14
64-QAM	1/2	16
	2/3	18
	3/4	20

Note that these SNR values are derived in an AWGN environment, and assume that a tail-biting convolutional code is used.

Test messages for measuring Receiver Sensitivity shall be based on a continuous stream of MAC PDUs, each with a payload consisting of a $\boldsymbol{R}$ times repeated sequence $\boldsymbol{S_{modulation}}$. For each modulation, a different sequence applies:

$\boldsymbol{S_{QPSK}}$ = [0xE4, 0xB1, 0xE1, 0xB4]

$\boldsymbol{S_{16\text{-}QAM}}$ = [0xA8, 0x20, 0xB9, 0x31, 0xEC, 0x64, 0xFD, 0x75] (167)

$\boldsymbol{S_{64\text{-}QAM}}$ = [0xB6, 0x93, 0x49, 0xB2, 0x83, 0x08, 0x96, 0x11, 0x41, 0x92, 0x01, 0x00,
0xBA, 0xA3, 0x8A, 0x9A, 0x21, 0x82, 0xD7, 0x15, 0x51, 0xD3, 0x05,
0x10, 0xDB, 0x25, 0x92, 0xF7, 0x97, 0x59, 0xF3, 0x87, 0x18, 0xBE,
0xB3, 0xCB, 0x9E, 0x31, 0xC3, 0xDF, 0x35, 0xD3, 0xFB, 0xA7,
0x9A, 0xFF, 0xB7, 0xDB]

For each mandatory test message, the ($\boldsymbol{R}$,$\boldsymbol{S_{modulation}}$) tuples that shall apply are as follows:

Short length test message payload (288 data bytes): (72,S_{QPSK}), (36,$S_{16\text{-}QAM}$), (6,$S_{64\text{-}QAM}$)
Mid length test message payload (864 data bytes): (216,S_{QPSK}), (108,$S_{16\text{-}QAM}$), (18,$S_{64\text{-}QAM}$)
Long length test message payload (1536 data bytes): (384,S_{QPSK}), (192,$S_{16\text{-}QAM}$), (32,$S_{64\text{-}QAM}$)

The test condition requirements are as follows:

— Ambient room temperature
— Shielded room
— Conducted measurement at the RF port if available
— Radiated measurement in a calibrated test environment if the antenna is integrated
— CC FEC is enabled

The test shall be repeated for each test message length and for each ($\boldsymbol{R}$,$\boldsymbol{S_{modulation}}$) tuple as identified above, using the mandatory FEC scheme. The results shall meet or exceed the sensitivity requirements set out in Equation (166).

8.4.14.1.2 MS UL Tx time tracking accuracy

With the time reference MS maintained in 8.4.13.4, MS shall autonomously adjust UL Tx timing according to the timing advances and retards of the DL in the preamble detected at the MS antenna port. The autonomous timing reference shall be tracked at antenna port without BS close-loop timing control.

At the MS, the transmitted radio frame shall be time-aligned with the network specified UL frame boundary. At zero timing advance and retard setting, the start of the first UL data symbol, excluding the CP duration, shall be time aligned with the specified UL frame boundary relative to the DL arrival time when measured at the antenna port without BS close-loop control.

8.4.14.1.3 MS autonomous neighbor cell scanning

If an MS supports FBSS/MDHO capability as defined in 11.7.12.5, the MS shall support autonomous neighbor cell scanning procedure according to the following. The MS may also perform normal scanning procedures as defined in 6.3.21.1.2. Autonomous scanning may be initiated by the MS with or without a trigger.

For autonomous scanning procedure, the MS shall perform neighbor cell scanning via preamble detection for neighbor cells in the same carrier frequency. The MS shall maintain the signal quality database for neighbor cells without being instructed by the BS.

8.4.14.2 Receiver adjacent and nonadjacent channel rejection

The adjacent channel rejection and alternate channel rejection shall be measured by setting the desired signal's strength 3 dB above the rate dependent receiver sensitivity [see Equation (166)] and raising the power level of the interfering signal until the specified error rate is obtained. The power difference between the interfering signal and the desired channel is the corresponding adjacent channel rejection. The interfering signal in the adjacent channel shall be a conforming OFDMA signal, not synchronized with the signal in the channel under test. For nonadjacent channel testing the test method is identical except the interfering channel shall be any channel other than the adjacent channel or the co-channel.

For the PHY to be compliant, the minimum rejection shall exceed the limits in Table 546.

Table 546—Adjacent and nonadjacent channel rejection

Modulation/coding	Adjacent channel rejection (dB)	Nonadjacent channel rejection (dB)
16-QAM-3/4	10	29
64-QAM-3/4	4	23

The requirements of Table 546 are applicable only to the mandatory Convolutional Encoding mode.

8.4.14.3 Receiver maximum input signal

8.4.14.3.1 SS receiver maximum input signal

The SS receiver shall be capable of decoding a maximum on-channel signal of –30 dBm.

8.4.14.3.2 BS receiver maximum input signal

The BS receiver shall be capable of decoding a maximum on-channel signal of –45 dBm.

8.4.14.4 Receiver maximum tolerable signal

8.4.14.4.1 SS receiver maximum tolerable signal

The SS receiver shall tolerate a maximum signal of 0 dBm without damage.

8.4.14.4.2 BS receiver maximum tolerable signal

The BS receiver shall tolerate a maximum signal of –10 dBm without damage.

8.4.15 Frequency control requirements

8.4.15.1 Center frequency and symbol clock frequency tolerance

At the BS, the transmitted center frequency, receive center frequency, and the symbol clock frequency shall be derived from the same reference oscillator. At the BS, the reference frequency accuracy shall be better than $\pm 2 \times 10^{-6}$.

At the SS, both the transmitted center frequency and the sampling frequency shall be derived from the same reference oscillator. Thereby, the SS UL transmission shall be locked to the BS so that its center frequency shall deviate no more than 2% of the subcarrier spacing compared to the BS center frequency.

During the synchronization period, the SS shall acquire frequency synchronization within the specified tolerance before attempting any UL transmission. During normal operation, the SS shall track the frequency changes by estimating the DL frequency offset and shall defer any transmission if synchronization is lost. To determine the Tx frequency, the SS shall accumulate the frequency offset corrections transmitted by the BS (e.g., in RNG-RSP message) and may add to the accumulated offset an estimated UL frequency offset based on the DL signal.

8.4.16 Optional HARQ support

The following optional modes exist for HARQ

— Incremental redundancy for CTC—specified in 6.3.17 and in 8.4.9.2.3.5.
— Incremental redundancy for CC (convolutional code)—specified in 8.4.16.2 and 8.4.9.2.1.1.
— Chase combining for all coding schemes specified in 8.4.16.1

These modes can be supposed by the normal map and the HARQ map.

8.4.16.1 Optional Chase HARQ support

The optional Chase HARQ scheme enables BS and SS to enhance performance of HARQ-enabled connection by means of chase combining scheme. This scheme is supported for all coding schemes. Each burst is appended with a CRC that is checked by the receiver. An UL and a DL ACK channels are defined (see 8.4.16.3 and 8.4.5.4.22). The receiver replies with an ACK in the corresponding ACK channel if the decoding succeeded and with a NACK if the decoding failed.

If the burst was not ACK-ed, the transmitter may transmit a burst with exactly the same data contents again. The receiver may combine the newly received burst with the formerly received burst(s) to enhance decoding performance.

8.4.16.1.1 HARQ retransmission process

The process of retransmissions is controlled by the BS using the ACID (ARQ Channel ID) and AI_SN fields in the DL and UL maps. Each HARQ channel (indicated by specific ACID of 0–15) is managed separately.

When the AI_SN field in the HARQ channel remains the same between two HARQ burst allocations, it indicates retransmission. In this case, the transmitter is required to retransmit the same data that was transmitted using the same ACID and AI_SN. The burst profile of the retransmission shall be the same as in the first transmission; however, the level of boosting and repetition may be changed.

When the AI_SN field in the HARQ channel is changed, it indicates transmission of new data. In this case, the data stored in the transmitter and receiver for this ACID and the previously used AI_SN may be discarded.

8.4.16.1.2 CRC

Bursts transmitted using Chase HARQ shall include CRC of 16 bits. The CRC is appended to MAC data after padding (before partitioning to FEC blocks and encoding as defined in 8.4.9). Padding is done so that the total length after CRC concatenation matches the size of the burst indicated by the map.

The CRC shall be CRC16-CCITT, as defined in ITU-T Recommendation X.25, and it is calculated over all the bits in the burst, including data and padding. After adding CRC, the packet shall be partitioned into FEC blocks and applied to the randomizer. The randomization is performed on each FEC block including CRC, which means that for each FEC encoder block the randomizer shall be initialized independently.

This CRC shall be used for error detection and for ACK/NACK transmission.

8.4.16.1.3 Concurrent transmission of UL HARQ bursts

The BS may allocate more than one UL HARQ burst for an SS (see 8.4.4.6). The maximal number of UL bursts supported by an HARQ-enabled SS is indicated by the capability field in 11.8.3.5.13 and includes both HARQ and non-HARQ bursts.

8.4.16.1.4 Encoding

When using Chase-HARQ with HARQ DL/UL IE in the normal maps, the encoding scheme is indicated by DIUC/UIUC code and the encoding process shall be the same as in non-HARQ transmission with the same DIUC/UIUC.

8.4.16.2 Optional IR HARQ for convolutional code

This mode of operation is similar to Chase HARQ (see 8.4.16.1). The specifications in 8.4.16.1 apply to this mode, except for the following differences:

a) An SPID field is supplied by the HARQ DL/UL MAP IE.
b) The value of SPID may be arbitrarily changed by the BS between retransmissions.
c) The encoding process is based on the non-HARQ coding scheme, except for the changes indicated in 8.4.9.2.1.1.

8.4.16.3 UL ACK channel

The UL ACK (Acknowledgment) provides feedback for DL Hybrid ARQ. This channel shall only be supported by SS supporting HARQ. The SS transmits ACK or NAK feedback for DL packet data. One ACK

channel occupies a half subchannel, which is three pieces of 3×3 UL tile in the case of optional PUSC or three pieces of 4×3 UL tile in the case of PUSC. The even half subchannel consists of Tile(0), Tile(2), and Tile(4). The odd half subchannel consists of Tile(1), Tile(3), and Tile(5).

The Acknowledgment bit of the *n*-th ACK channel shall be 0 (ACK) if the corresponding DL packet has been successfully received; otherwise, it shall be 1 (NAK). This 1 bit is encoded into a length 3 codeword over 8-ary alphabet for the error protection as shown in Table 547.

Table 547—ACK channel subcarrier modulation

ACK 1-bit symbol	Vector indices per Tile Tile(0), Tile(2), Tile(4) for even half subchannel Tile(1), Tile(3), Tile(5) for odd half subchannel
0	0, 0, 0
1	4, 7, 2

The UL ACK channel is orthogonally modulated with QPSK symbols. Let $M_{n,8m+k}$ ($0 \le k \le 7$) be the modulation symbol index of the *k*-th modulation symbol in the *m*-th UL tile of the *n*-th UL ACK channel. The possible modulation patterns composed of $M_{n,8m}$, $M_{n,8m+1}$, … ,$M_{n,8m+7}$ in the *m*-th tile of the *n*-th UL ACK channel are defined in Table 548.

Table 548—Orthogonal modulation index in UL ACK channel

Vector index	$M_{n,8m}, M_{n,8m+1}, \ldots, M_{n,8m+7}$
0	P0, P1, P2, P3, P0, P1, P2, P3
1	P0, P3, P2, P1, P0, P3, P2, P1
2	P0, P0, P1, P1, P2, P2, P3, P3
3	P0, P0, P3, P3, P2, P2, P1, P1
4	P0, P0, P0, P0, P0, P0, P0, P0
5	P0, P2, P0, P2, P0, P2, P0, P2
6	P0, P2, P0, P2, P2, P0, P2, P0
7	P0, P2, P2, P0, P2, P0, P0, P2

where

$$P0 = \exp\left(j \cdot \frac{\pi}{4}\right)$$

$$P1 = \exp\left(j \cdot \frac{3\pi}{4}\right)$$

$$P2 = \exp\left(-j \cdot \frac{3\pi}{4}\right)$$

$$P3 = \exp\left(-j \cdot \frac{\pi}{4}\right)$$

$M_{n,8m+k}$ is mapped to UL ACK channel tile as shown in Figure 304 for PUSC UL subchannel and in Figure 305 for optional PUSC UL subchannel. An UL ACK channel is mapped to half subchannel composed of 3 tiles. In the figures, subcarrier index increases from left to right.

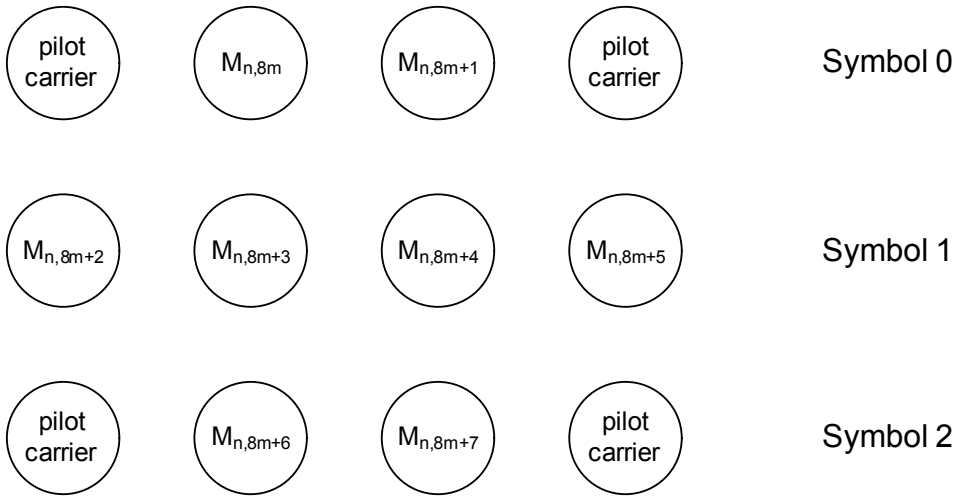

Figure 304—Subcarrier mapping of UL ACK modulation symbols for PUSC

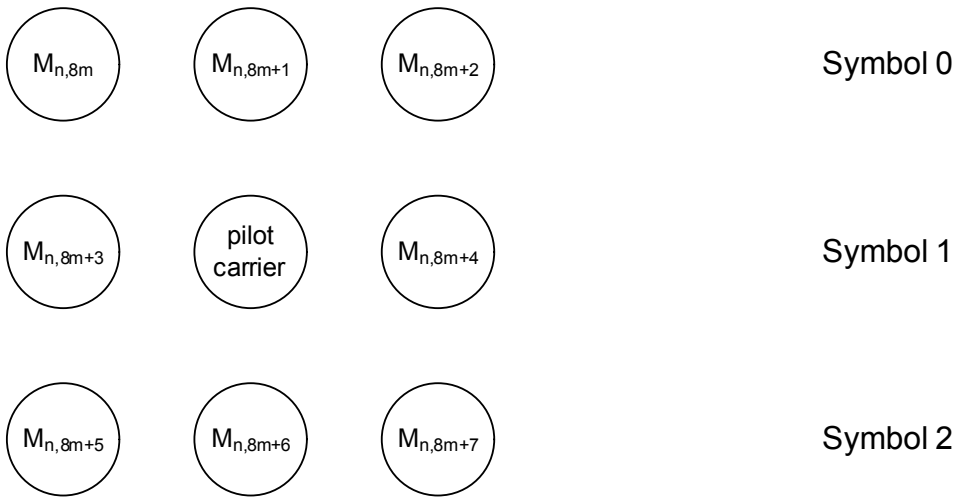

Figure 305—Subcarrier mapping of UL ACK modulation symbols for optional PUSC

8.5 WirelessHUMAN specific components

8.5.1 Channelization

The channel center frequency shall follow Equation (168):

$$\text{Channel center frequency (MHz)} = 5000 + 5\, n_{ch} \tag{168}$$

where n_{ch} = 0,1,...199 is the Channel Nr. This definition provides an 8-bit unique numbering system for all channels, with 5 MHz spacing, from 5 GHz to 6 GHz. This provides flexibility to define channelization sets for current and future regulatory domains. The set of allowed channel numbers is shown in Table 549 for

two regulatory domains. The support of any individual band in the table is not mandatory, but all channels within a band shall be supported.

Figure 306 depicts the 20 MHz channelization scheme listed in Table 549. Channelization has been defined to be compatible with IEEE Std 802.11a-1999 for interference mitigation purposes, even though this results in less efficient spectrum usage in the middle Unlicensed National Information Infrastructure (U-NII) band.

Table 549—Channelizations

Regulatory domain	Band (GHz)	Channelization (MHz)	
		20	10
USA	U-NII middle 5.25–5.35	56, 60, 64	55, 57, 59, 61, 63, 65, 67
	U-NII upper 5.725–5.825	149, 153, 157, 161, 165[a]	148, 150, 152, 154, 156, 158, 160, 162, 164[a],166[a]
Europe	CEPT band B[b] 5.47–5.725	100, 104, 108, 112, 116, 120, 124, 128, 132, 136	99, 101, 103, 105, 107, 109, 111, 113, 115, 117, 119, 121, 123, 125, 127, 129, 131, 133, 135, 137
	CEPT band C[b] 5.725–5.875	148, 152, 156, 160, 164, 168	147, 149, 151, 153, 155, 157, 159, 161, 163, 165, 167, 169

[a]See CFR 47 Part 15.247.
[b]Current applicable regulations do not allow this standard to be operated in the indicated band.

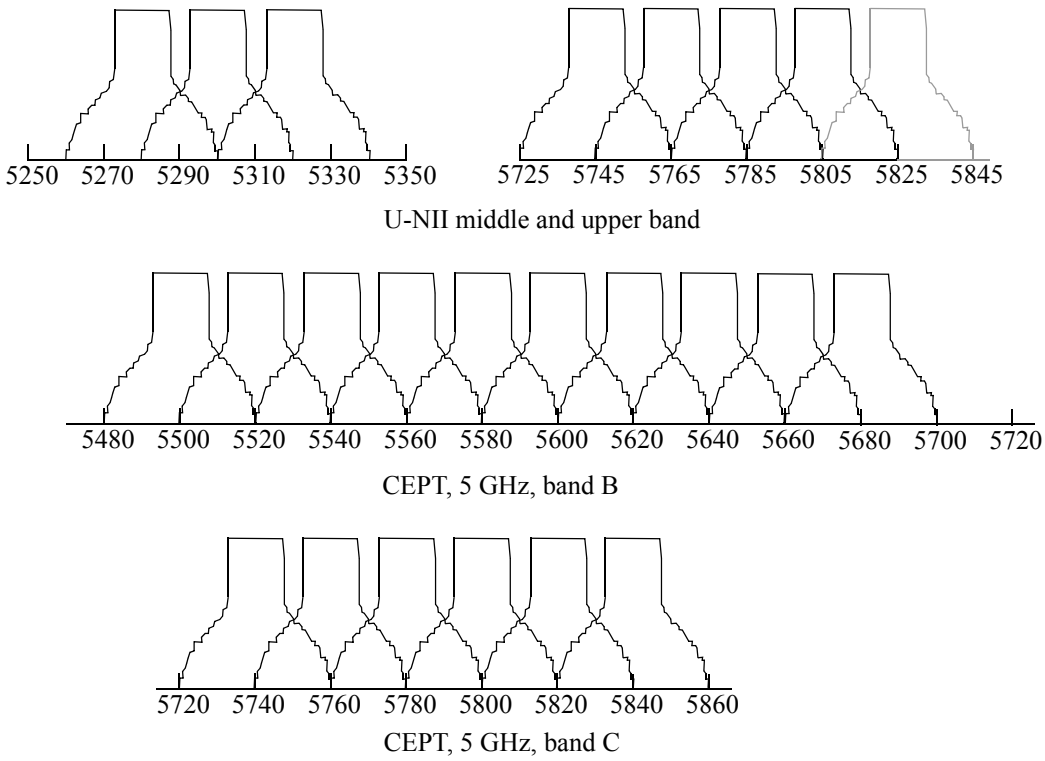

Figure 306—Channelization, 20 MHz

8.5.2 Tx spectral mask

The transmitted spectral density of the transmitted signal shall fall within the spectral mask as shown Figure 307 and Table 550. The measurements shall be made using 100 kHz resolution bandwidth and a 30 kHz video bandwidth. The 0 dBr level is the maximum power allowed by the relevant regulatory body.

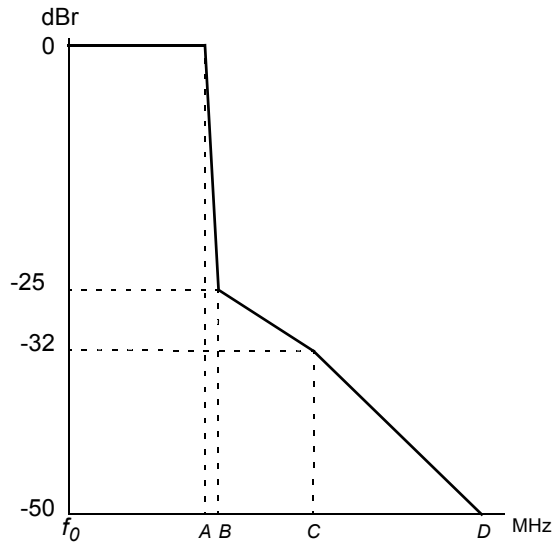

Figure 307—Tx spectral mask (see Table 550)

Table 550—Tx spectral mask parameters

Channelization (MHz)	A	B	C	D
20	9.5	10.9	19.5	29.5
10	4.75	5.45	9.75	14.75

9. Configuration

9.1 SS IP addressing used on secondary management connection

9.1.1 DHCP fields used by the SS

The following fields shall be present in the DHCP request from the SS and shall be set as described below and encoded as per IETF RFC 2131:

— The hardware type (htype) shall be set to 1 (Ethernet).
— The hardware length (hlen) shall be set to 6.
— The client hardware address (chaddr) shall be set to the 48-bit MAC address associated with the RF interface of the SS.
— The "client identifier" option shall be included, with the hardware type set to 1, and the value set to the same MAC address as the chaddr field.
— The "parameter request list" option shall be included. The option codes that shall be included in the list are follows:
  — Option code 1 (Subnet Mask)
  — Option code 2 (Time Offset)
  — Option code 3 (Router Option)
  — Option code 4 (Time Server Option)
  — Option code 7 (Log Server Option)
  — Option code 60 (Vendor Class Identifier)—A compliant SS shall send the following ASCII coded string in Option code 60: "802.16."

The following fields are expected in the DHCP response returned to the SS. The SS shall configure itself based on the DHCP response.

— The IP address to be used by the SS (yiaddr).
— The IP address of the TFTP server for use in the next phase of the bootstrap process (siaddr).
— If the DHCP server is on a different network (requiring a relay agent), then the IP address of the relay agent (giaddr).
  NOTE—This may differ from the IP address of the first hop router.
— The name of the SS configuration file to be read from the TFTP server by the SS (file).
— The subnet mask to be used by the SS (Subnet Mask, option 1).
— The time offset of the SS from UTC (Time Offset, option 2). This is used by the SS to calculate the local time for use in time-stamping error logs.
— A list of addresses of one or more routers to be used for forwarding SS-originated IP traffic (Router Option, option 3). The SS is not required to use more than one router IP address for forwarding.
— A list of time servers (IETF RFC 868) from which the current time may be obtained (Time Server Option, option 4).
— A list of SYSLOG servers to which logging information may be sent (Log Server Option, option 7).

9.1.2 Mobile IP v4 fields used by the MS

If Mobile IP v4 is used to obtain an address for the secondary management connection, the following fields shall be present in the Mobile IP registration request sent from the MIP client residing in the MS and shall be set as described below and encoded according to IETF RFC 3344.

a) When the MS (or Mobile Node) attempts to obtain an IP address dynamically, the home address field shall be set to "0.0.0.0".

b) When the MS attempts to obtain an IP address in the visited network, the home agent address field shall be set to “0.0.0.0”. On the other hand, when the MS attempts to obtain an IP address in the home network, the home agent address field shall be set to “255.255.255.255”.

c) The Network Access Identifier (NAI) extension [IETF RFC 2789] shall be included for identifying the Mobile IP user.

d) The Challenge extension shall be included [IETF RFC 3012], if the Challenge extension is included in the Agent Advertisement message.

e) A 128-bit key may be shared between an MS and an ASA server during the initial Mobile IP registration, and the MS-ASA Authentication extension may be generated based on the shared key [IETF RFC 3012].

The following fields are expected in the Mobile IP registration response returned to the MIP Client residing in the MS. The MS shall configure itself based on the Mobile IP registration response.

— The home address to be used by the MS.
— The MS’s NAI extension to identify a Mobile IP user [IETF RFC 2789].
— The challenge extension if the foreign agent supports more strong security.
— The MS and home agent authentication extension for authenticating the home agent.
— The Key Reply extensions for security between the MS and the home agent, and between the MS and foreign agent, if the MS requests keys between the MS and the home agent, and between the MS and the foreign agent.

9.2 SS Configuration file

9.2.1 SS binary configuration file format

The SS-specific configuration data shall be contained in the SS configuration file that is downloaded to the SS via TFTP. It shall consist of a number of configuration settings (1 per parameter), each in a TLV encoded form (see Clause 11). Note that SSs are not required to need a configuration file. In this case, the configuration file name will not be present in the DHCP response.

Configuration settings are divided into three types as follows:

— Standard configuration settings that shall be present
— Standard configuration settings that may be present
— Vendor-specific configuration settings

SSs shall be capable of processing all standard configuration settings. SSs shall ignore any configuration setting in the configuration file that it cannot interpret. To allow uniform management of SSs conformant to this specification, conformant SSs shall support a 8192 byte configuration file at a minimum.

Integrity of the configuration file information is provided by the SS message integrity check (MIC). The SS MIC is a digest that ensures the data sent from the provisioning server were not modified en route. This is not an authenticated digest (i.e., it does not include any shared secret).

The SS MIC shall immediately be followed by the End of Data marker equal to 0xFF.

In case the file is a noninteger number of 32-bit words, the file shall be padded with zeros until the next 32-bit boundary.

The file structure is shown in Figure 308.

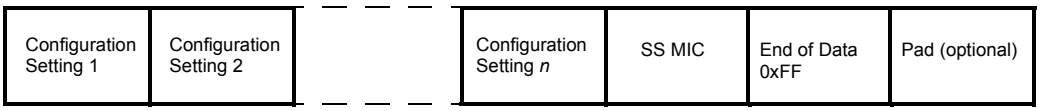

Figure 308—Configuration file structure

9.2.2 Configuration file settings

The following configuration settings shall be included in the configuration file and shall be supported by all SSs:

— SS MIC Configuration Setting
— TFTP Server Timestamp

The following configuration settings may be included in the configuration file and if present shall be supported by all SSs:

— Software Upgrade Filename Configuration Setting (see 11.2.2)
— Software Server IP Address (see 11.2.3)
— Vendor-specific configuration settings

9.2.3 Configuration file creation

The sequence of operations required to create the configuration file is as shown in Figure 309, Figure 310, and Figure 311.

a) Create the TLV entries for all the parameters required by the SS.

type, length, value for parameter 1
type, length, value for parameter 2
type, length, value for parameter *n*

Figure 309—Create TLV entries for parameters required by the SS

b) Calculate the SS MIC configuration setting as defined in 9.2.3.1 and add to the file following the last parameter using code and length values defined for this field.

type, length, value for parameter 1
type, length, value for parameter 2
type, length, value for parameter *n*
type, length, value for SS MIC

Figure 310—Add SS MIC

c) Add the end of data marker and pad with zeros to next 32-bit boundary if necessary.

type, length, value for parameter 1	
type, length, value for parameter 2	
type, length, value for parameter *n*	
type, length, value for SS MIC	
end of data marker	**pad (optional)**

Figure 311—Add end of data marker and pad

9.2.3.1 SS MIC calculation

The SS MIC configuration setting shall be calculated by performing a SHA-1 digest over the bytes of the configuration setting fields. It is calculated over the bytes of these settings as they appear in the TFTPed image, without regard to TLV ordering or contents. There are two exceptions to this disregard of the contents of the TFTPed image:

— The bytes of the SS MIC TLV itself are omitted from the calculation. This includes the type, length, and value fields.
— On receipt of a configuration file, the SS shall recompute the digest and compare it to the SS MIC configuration setting in the file. If the digests do not match, then the configuration file shall be discarded.

9.3 ASN.1 Management Information Base

The Management Information Base for BSs and SSs is defined as ASN.1 (refer to [ISO/IEC ASN.1]) MIB modules, in conformance with IETF RFC 2578. The implementation of the ASN.1 MIB modules is mandatory for all BSs. The implementation of the ASN.1 MIB modules is mandatory for SSs that are managed using the SNMP protocol.

The specific requirements for implementation of individual MIB modules are defined in 9.3.3. The specific requirements for implementation of individual MIB objects in each MIB module are defined in conformance statements of the MIB modules.

Table 551 lists all defined ASN.1 MIB modules, their status and module identity OID. The subsequent subclauses give more details about each defined MIB module.

Table 551—List of ASN.1 MIB Modules

MIB module name	Module identity name	Revision	Status	Module Identity OID	Relevant subclause
WMAN-IF-MIB	wmanIfMib	1	Obsolete	iso(1).org(3).dod(6).internet(1).mgmt(2).mib-2(1).transmission(10).wmanIfMib(184)	13.2.1
WMAN-DEV-MIB	wmanDevMib	1	Active	iso(1).std(0).iso8802(8802).wman(16).wmanDevMib(1)	13.2.2
WMAN-IF2-BS-MIB	wimanIf2BsMib	1	Active	iso(1).std(0).iso8802(8802).wman(16).wmanIf2BsMib(2)	13.2.3
WMAN-IF2M-BS-MIB	wmanIf2mBsMib	1	Active	iso(1).std(0).iso8802(8802).wman(16).wmanIf2mBsMib(3)	13.2.4
WMAN-IF2F-BS-MIB	wmanIf2fBsMib	1	Active	iso(1).std(0).iso8802(8802).wman(16).wmanIf2fBsMib(4)	13.2.5
WMAN-IF2-SS-MIB	wmanIf2SsMib	1	Active	iso(1).std(0).iso8802(8802).wman(16).wmanIf2SsMib(5)	13.2.6
WMAN-IF2-TC-MIB	wmanIf2TcMib	1	Active	iso(1).std(0).iso8802(8802).wman(16).wmanIf2TcMib(6)	13.2.7

9.3.1 WMAN-IF-MIB module

The WMAN-IF-MIB MIB module is obsolete. Equipment compliant to this standard shall implement the WMAN-IF2-BS-MIB, WMAN-IF2M-BS-MIB, WMAN-IF2F-BS-MIB, WMAN-IF2-SS-MIB, and WMAN-IF2-TC-MIB modules rather than the WMAN-IF-MIB MIB module. The WMAN-IF-MIB MIB module was originally introduced in the amendment IEEE Std 802.16f-2005 to define management objects relevant to a fixed broadband wireless access system specified in IEEE Std 802.16-2004.

The WMAN-IF-MIB MIB module is identified by the module identity name wmanIfMib and is accessible through the following OID:

iso(1).org(3).dod(6).internet(1).mgmt(2).mib-2(1).transmission(10).wmanIfMib(184)

9.3.2 WMAN-DEV-MIB module

The WMAN-DEV-MIB MIB module defines management objects relevant to devices implementing the broadband wireless access air interface defined in this standard. The objects of this MIB module may refer explicitly to terms defined in the standard (e.g., configuration file encodings) but mainly provide the mandatory support required to manage the devices implementing the IEEE 802.16 interface.

The BS shall implement this MIB module. SS shall implement this MIB module if it is managed using SNMP protocol.

The WMAN-DEV-MIB MIB module is identified by module identity name wmanDevMib and shall be accessed through the following OID:

iso(1).std(0).iso8802(8802).wman(16).wmanDevMib(1)

9.3.3 WMAN-IF2-BS-MIB module

The WMAN-IF2-BS-MIB MIB module defines all management objects that are common to all broadband wireless interfaces as defined in this standard.

The BS shall implement this MIB module.

The WMAN-IF2-BS-MIB MIB module is identified by module identity name wmanIf2BsMib and shall be accessed through the following OID:

iso(1).std(0).iso8802(8802).wman(16).wmanIf2BsMib(2)

9.3.4 WMAN-IF2M-BS-MIB module

The WMAN-IF2M-BS-MIB MIB module defines all management objects that are specific to mobile broadband wireless interfaces as defined in this standard.

The BS shall implement this MIB module if it supports mobility.

The WMAN-IF2M-BS-MIB MIB module is identified by module identity name wmanIf2mBsMib and shall be accessed through the following OID:

iso(1).std(0).iso8802(8802).wman(16).wmanIf2mBsMib(3)

9.3.5 WMAN-IF2F-BS-MIB module

The WMAN-IF2F-BS-MIB MIB module defines all management objects that are specific to fixed broadband wireless interfaces as defined in this standard.

The BS shall implement this MIB module if it supports fixed BWA.

The WMAN-IF2F-BS-MIB MIB module is identified by module identity name wmanIf2fBsMib and shall be accessed through the following OID:

iso(1).std(0),iso8802(8802).wman(16).wmanIf2fBsMib(4)

9.3.6 WMAN-IF2-SS-MIB module

The WMAN-IF2-SS-MIB MIB module defines all management objects for all broadband wireless interfaces as defined in this standard for direct management of SS.

The SS shall implement this MIB module if it is managed using SNMP protocol.

The WMAN-IF2-SS-MIB MIB module is identified by module identity name wmanIf2SsMib and shall be accessed through the following OID:

iso(1).std(0).iso8802(8802).wman(16).wmanIf2SsMib(5)

9.3.7 WMAN-IF2-TC-MIB module

The WMAN-IF2-TC-MIB MIB module defines TEXTUAL-CONVENTIONS to be imported by WMAN-IF2 MIBs.

The WMAN-IF2-TC-MIB MIB module is identified by module identity name wmanIf2TcMib and shall be accessed through the following OID:

iso(1).std(0).iso8802(8802).wman(16).wmanIf2TcMib(6)

9.4 Management protocols

The protocols used for management purposes between an external entity and an IEEE 802.16 entity are not in the scope of this standard. Refer to Annex L for example deployments of management frameworks. Whichever framework is deployed, the ASN.1 MIBs serve the purpose of a protocol neutral reference model of the management operations that may be performed on an IEEE 802.16 entity.

9.4.1 SNMP

SNMP is a protocol to access the managed objects in a BS and SS. BSs and SSs implementing SNMP management protocol are assumed to comply with the following requirements.The support of SNMP is compliant to SNMPv2, but is backward compatible to SNMPv1 through appropriate translation. The SNMP agent optionally supports for SNMPv3. If an agent implements SNMPv3, it is assumed to implement at least all the mandatory groups of the standard MIBs required for SNMPv3: RFC3410, RFC3411, RFC3412, RFC3413, RFC3414, and RFC3415 as well as the MIB defining coexistence between SNMPv1, v2 and v3 in RFC3584. The SNMPv3 framework may be considered as a mechanism to flexibly control access to this MIB module, and mitigate security vulnerability. The SNMP agent is assumed to support RFC3418.

9.4.1.1 Relationship with interface MIB

This subclause describes the integration with MIB-II under Interface Group MIB defined in IETF RFC 2863.

9.4.1.1.1 MIB-2 integration

The Internet Assigned Number Authority (IANA) has assigned the following ifTypes:

```
IANAifType ::= TEXTUAL-CONVENTION
        SYNTAX INTEGER {
                propBWAp2Mp (184),      -- prop broadband wireless access point to multipoint
                                        -- use of this ifType for IEEE 802.16 WMAN
                                        -- interface as per IEEE Std 802.16f is deprecated,
                                        -- and ifType ieee80216WMAN should be used
                                        -- instead.
                ieee80216WMAN (237),    -- IEEE 802.16 WMAN interface
        }
```

The interface type "propBWAp2Mp" (ifType 184) originally introduced in the amendment IEEE 802.16f-2005 is deprecated. All new implementations of SNMP agents should use the interface type "ieee80216WMAN" (ifType 237). For backwards compatibility purposes, SNMP managers shall accept the deprecated interface type.

9.4.1.1.2 Usage of MIB-II tables

"Interfaces" group of MIB-II, in RFC2863, has been designed to manage various sub-layers (e.g., MAC and PHY) beneath the internetwork-layer for numerous media-specific interfaces. The implementation of ifTable in SNMP managed BS and SS is mandatory.

The implementation of the ifTable for BS shall create one row for each BS sector. Each BS sector shall support a different MAC version (see 11.1.3). The following recommendations must be applied to each row defining a BS sector:

— ifIndex value is implementation specific
— ifType shall be set to ieee80216WMAN (value of 237 as defined in 9.4.1.1.1)
— ifSpeed shall be set to "0"[24]
— ifPhysAddress shall be set to the Base Station ID of the BS sector
— ifOperStatus is "up(1)" as soon as the BS has started to transmit DCD messages allowing an SS to synchronize to a downlink channel. IfOperStatus "dormant(5)," does not apply to a BS
— All other columnar objects shall be initialized as specified in IETF RFC 2863

Table 552—Example of the Usage of ifTable objects for base station

ifTable	ifIndex	ifType (IANA)	ifSpeed	ifPhysAddress	ifAdminStatus	ifOperStatus
BS Sector 1	1	ieee80216WMAN	0	BS station ID	Administration Status	Operational Status
BS Sector 2	2	ieee80216WMAN	0	BS station ID	Administration Status	Operational Status
BS Sector 3	3	ieee80216WMAN	0	BS station ID	Administration Status	Operational Status
Ethernet	4	ethernetCsmacd	Interface Speed	MAC address	Administration Status	Operational Status

Table 552 shows an example of the usage of ifTable for BS that supports multiple sectors. Each sector may support one of the MAC/PHY interfaces as defined in 11.1.3.

The implementation of the ifTable for SS shall create one row for each SS WirelessMAN interface. Additional rows may be necessary to support other network interfaces, such as Ethernet. The following recommendations shall be applied to each row:

— ifIndex value is implementation specific
— ifType shall be set to ieee80216WMAN (value of 237 as defined in subclause 9.4.1.1.1)
— ifSpeed shall be set to "0"
— ifPhysAddress shall be set to the SS MAC Address (of the WirelessMAN interface)
— ifOperStatus is "up(1)" as soon as the SS is capable of detecting downlink PHY frames
— All other columnar objects shall be initialized as specified in IETF RFC 2863

[24]The data rate in bits/s varies dynamically between zero and a theoretical maximum and there is no concept of an interface speed in the IEEE 802.16 standards. In such cases, according the IETF RFC 2863, the ifSpeed should be set to zero.

Table 553—Example of the Usage of ifTable objects for subscriber station

ifTable	ifIndex	ifType (IANA)	ifSpeed	ifPhysAddress	ifAdminStatus	ifOperStatus
SS	1	ieee80216WMAN	0	SS MAC address	Administration Status	Operational Status
Ethernet	2	ethernetCsmacd	Interface Speed	MAC address	Administration Status	Operational Status

Table 553 shows an example of the usage of ifTable for SS that may support one of the MAC / PHY interfaces as defined in 11.1.3.

Figure 312 shows a procedure describing how the BS can determine the MAC / PHY standard interface and capability a SS can support.

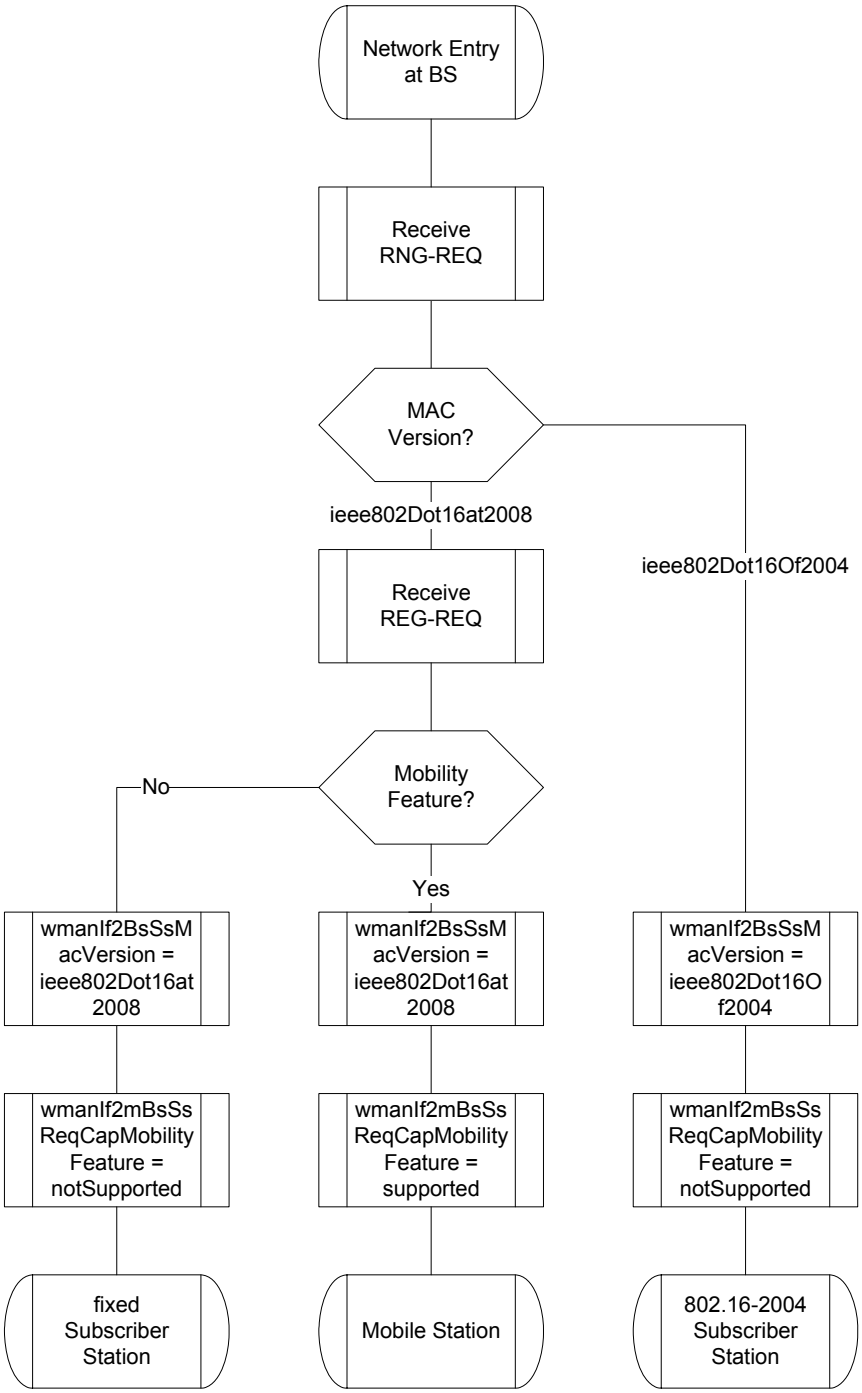

Figure 312—SS/MS Network Entry

1) Receive RNG-REQ from SS / MS
2) If MAC version is IEEE Std 802.16-2004, then
   a) wmanIfBsSsMacVersion = ieee802Dot16Of2004
   b) wmanIf2mBsSsReqCapMobilityFeature = Not Supported
   c) Go to step 5)

3) Receive REG-REQ from SS/MS
4) If Mobility Feature is supported, then
   a) wmanIfBsSsMacVersion = ieee802Dot16at2009
   b) wmanIf2mBsSsReqCapMobilityFeature = Supported

   otherwise
   c) wmanIfBsSsMacVersion = ieee802Dot16at2009
   d) wmanIf2mBsSsReqCapMobilityFeature= Not Supported
5) Continue network entry procedure

9.4.1.2 Events and traps

IEEE 802.16 WMAN MIBs defines objects for reporting events through mechanisms, such as traps and non-volatile logging. However, the definition and coding of events is vendor-specific. In order to assist the network operators who must troubleshoot multi-vendor equipment, the circumstances and meaning of each event should be reported as human-readable text. Therefore, the trap definitions should include the event reason encoded as display String, and is shown in the following example.

```
trapName NOTIFICATION-TYPE
      OBJECTS     {ifIndex,
                  eventReason,
                  other useful objects
                  }
      MAX-Access   read-only
      STATUS       current
      DESCRIPTION
            "trap description"
 ::= { Object Id }.
```

10. Parameters and constants

10.1 Global values

The BS and SS shall meet the requirements contained in Table 554.

Table 554—Parameters and constants

System	Name	Time reference	Minimum value	Default value	Maximum value
BS	DCD Interval	Time between transmission of DCD messages.	—	—	10 s
BS	UCD Interval	Time between transmission of UCD messages.	—	—	10 s
BS	UCD Transition Interval	The time the BS shall wait after repeating a UCD message with an incremented Configuration Change Count before issuing a UL-MAP message referring to Uplink_Burst_Profiles defined in that UCD message.	20 ms following the last fragment of the message	—	—
BS	DCD Transition Interval	The time the BS shall wait after repeating a DCD message with an incremented Configuration Change Count before issuing a DL-MAP message referring to Downlink_Burst_Profiles defined in that DCD message.	20 ms following the last fragment of the message	—	—
BS	Max MAP Pending	Maximum validity of map.	—	—	End of next frame
BS	Initial Ranging Interval	Time between Initial Ranging regions assigned by the BS.	—	—	2 s
BS	CLK-CMP Interval	Time between the clock compare measurements used for the generation of CLK-CMP messages.	50 ms	50 ms	50 ms
SS	Lost DL-MAP Interval	Time since last received DL-MAP message before DL synchronization is considered lost.	—	—	600 ms (during initial network entry) 655 s (after initial network entry)
SS	Lost UL-MAP Interval	Time since last received UL-MAP message before UL synchronization is considered lost.	—	—	600 ms (during initial network entry) 655 s (after initial network entry)
SS	Contention Ranging Retries	Number of retries on contention Ranging Requests.	16	—	—

Table 554—Parameters and constants *(continued)*

System	Name	Time reference	Minimum value	Default value	Maximum value
BS	Invited Ranging Retries	Number of retries on inviting Ranging Requests.	16	—	—
SS	Request Retries	Number of retries on bandwidth allocation requests.	16	—	—
SS	Registration Request Retries	Number of retries on registration requests.	3	—	—
BS, SS	T_{proc}	Time provided between arrival of the last bit of a UL-MAP at an SS and effectiveness of that map. For OFDMA mode, the time shall be counted starting from the end of the burst carrying the UL-MAP.	SC: 200 µs OFDM: 1 ms OFDMA: $T_{proc} = T_f$	—	—
BS	SS Ranging Response Processing Time	Time allowed for an SS following receipt of a ranging response before it is expected to reply to an invited ranging request.	10 ms	—	—
SS, BS	Minislot size (SC only)	Size of minislot for UL transmission. Shall be a power of 2 (in units of PS).	1 PS	—	—
SS, BS	DSx Request Retries	Number of Timeout Retries on DSA/DSC/DSD Requests.	—	3	—
SS, BS	DSx Response Retries	Number of Timeout Retries on DSA/DSC/DSD Responses.	—	3	—
SS	TFTP Backoff Start	Initial value for TFTP backoff.	1 s	—	—
SS	TFTP Backoff End	Last value for TFTP backoff.	16 s	—	—
SS	TFTP Request Retries	Number of retries on TFTP request.	16	—	—
SS	TFTP Download Retries	Number of retries on entire TFTP downloads.	3	—	—
SS	TFTP Wait	The duration between two consecutive TFTP retries.	2 min	—	—
SS	Time of Day Retries	Number of Retries per Time of Day Retry Period.	3	—	—
SS	Time of Day Retry Period	Time period for Time of Day retries.	5 min	—	—
SS	T1	Wait for DCD timeout.	—	—	5 × DCD interval maximum value
SS	T2	Wait for broadcast ranging timeout.	—	—	5 × ranging interval

Table 554—Parameters and constants *(continued)*

System	Name	Time reference	Minimum value	Default value	Maximum value
SS, MS	T3	Ranging response reception timeout following the transmission of a ranging request.	—	OFDMA: 60 msec: RNG-RSP after CDMA ranging or RNG-REQ during initial or periodic ranging 50 msec: RNG-RSP after RNG-REQ during HO to negotiated target BS 200 msec: RNG-RSP after RNG-REQ during HO to non-negotiated target BS 200 msec: RNG-RSP after RNG-REQ during location update or re-entry from idle mode	200 ms
SS	T4	Wait for ranging opportunity or data grant. If the pending-until-complete field was used earlier by this SS, then the value of that field shall be added to this interval. For OFDMA, it is a timer to start Periodic Ranging.	—	—	35 s
SS	T6	Wait for registration response.	—	—	3 s
SS, BS	T7	Wait for DSA/DSC/DSD Response timeout.	—	—	1 s
SS, BS	T8	Wait for DSA/DSC Acknowledge timeout.	—	—	300 ms
BS	T9	The time allowed between the BS sending a RNG-RSP (include Basic CID + Primary CID) to an SS, and receiving a SBC-REQ from that same SS.	300 ms	300 ms	—

Table 554—Parameters and constants *(continued)*

System	Name	Time reference	Minimum value	Default value	Maximum value
SS, BS	T10	Wait for Transaction End timeout	—	—	3 s
SS	T12	Wait for UCD descriptor	—	—	5 × UCD Interval maximum value
BS	T13	The time allowed for an SS, following receipt of a REG-RSP message to send a TFTP-CPLT message to the BS.	15 min	15 min	—
SS	T14	Wait for DSX-RVD Timeout.	—	—	200 ms
BS	T15	Wait for MCA-RSP.	20 ms	20 ms	—
BS	T17	Time allowed for SS to complete SS Authorization and Key Exchange.	5 min	5 min	—
SS	T18	Wait for SBC-RSP timeout.	—	50 ms	<< T9
SS	T20	Time the SS searches for preambles on a given channel	2 MAC frames	—	—
SS	T21	Time the SS searches for decodable DL-MAP on a given channel.	—	—	11 s
SS, BS	T22	Wait for ARQ-Reset.	—	—	0.5 s
SS	SBC Request Retries	Number of retries on SBC Request.	3	3	16
SS	TFTP-CPLT Retries	Number of retries on TFTP-CPLT.	3	3	16
SS	T26	Wait for TFTP-RSP.	10 ms	200 ms	200 ms
BS	T27 as Idle Timer	Maximum time between unicast grants to SS when BS believes SS UL transmission quality is *good enough.*	SS Ranging Response Processing Time	—	—
BS	T27 as Active Timer	Maximum time between unicast grants to SS when BS believes SS UL transmission quality is *not good enough.*	SS Ranging Response Processing Time	—	—
SS	FPC Processing Time	The earliest start time of an UL allocation to which the MS shall apply the FPC correction.	2.5 ms	2.5 ms	2.5 ms
BS	Ranging Correction Retries	Number of Ranging Correction Retries.	—	16	—

Table 554—Parameters and constants *(continued)*

System	Name	Time reference	Minimum value	Default value	Maximum value
SS	RNG-RSP Processing Time	Time allowed for an SS following receipt of a RNG-RSP before it is expected to apply the corrections instructed by the BS Minimum value.	—	—	2.5 ms from the start of the frame (*n*+1) were frame n is the frame containing the RNG-RSP. If there is an UL allocation to the SS before the 2.5 ms in frame *n*+1, then the power change shall be applied before the end of the frame *n*+1.
SS	Power Control IE Processing Time	Time allowed for an SS following receipt of a UL-MAP including a Power Control IE before it is expected to apply the corrections instructed by the BS.	—	—	2.5 ms from the start of the frame (*n*+1) were frame *n* is the frame containing the UL map containing the Power Control IE. If there is an UL allocation to the SS before the 2.5 ms in frame *n*+1, then the power change shall be applied before the end of the frame *n*+1.
SS	T28	DBPC-REQ retry timer for requesting less robust burst profile after rejection by the BS.	200 ms	1 s	1 min
SS	T29	RNG-REQ/DBPC-REQ retry timer for requesting more robust burst profile after rejecting by the BS.	200 ms	1 s	30 s

Table 554—Parameters and constants *(continued)*

System	Name	Time reference	Minimum value	Default value	Maximum value
SS	T30	DBPC-RSP reception timeout following the transmission of a DBPC-REQ.	200 ms	200 ms	200 ms
MS	Min_Sleep_Interval	Minimum sleeping time allowed to MS.	1 frame	—	—
MS	Max_Sleep_Interval	Maximum sleeping time allowed to MS.	—	—	1024 frames
MS	Listening_Interval	The time duration during which the MS, after waking up and synchronizing with the DL transmissions, can demodulate DL transmissions and decide whether to stay awake or go back to sleep.	—	—	64 frames
BS	MOB_NBR-ADV Interval	Nominal time between transmission of MOB_NBR-ADV messages.	—	—	30 s
BS, MS	ASC-AGING-TIMER	Nominal time for aging of MS associations	0.1 s	—	10 s
MS	Serving BSID AGING-TIMER	Nominal time for aging of serving BS association. Timer recycles on successful serving BS DL-MAP read	—	—	655 s
MS	T42	MOB_HO-IND timeout when sent with HO_IND_type = 0b10.	—	—	—
BS	Paging Retry Count	Number of retries on paging transmission. If the BS does not receive RNG-REQ from the MS until this value decreases to zero, it determines that the MS is unavailable.	—	3	16
BS, MS	Mode Selection Feed-back Processing Time	The time allowed between the end of the burst carrying the mode selection feedback sub-header and the start of the UL subframe carrying the mode selection feedback response.	TDD: Frame duration FDD: 1/2 frame duration	—	—
MS	Idle Mode Timer	MS timed interval to conduct location update. Set timer to MS idle mode timeout capabilities setting. Timer recycles on suc-cessful idle mode location update.	128 s	4096 s	65 536 s

Table 554—Parameters and constants *(continued)*

System	Name	Time reference	Minimum value	Default value	Maximum value
BS	Idle Mode System Timer	For BS acting as paging controller, timed interval to receive notification of MS idle mode location update. Set timer to MS Idle Mode Timeout. Timer recycles on successful idle mode location update.	128 s	4096 s	65 536 s
MS	T43	Time the MS waits for MOB_SLP-RSP or DL sleep control extended subheader.	—	—	—
MS	T44	Time the MS waits for MOB_SCN-RSP.	—	—	—
MS	T45	Time the MS waits for DREG-CMD.	—	250 ms	500 ms
BS	Management Resource Holding Timer	Time the BS maintain connection information with the MS after the BS send DREG-CMD to the MS.	—	500 ms	1 s
MS	DREG Request Retry Count	Number of retries on DREG Request message.	3	3	16
BS	DREG Command Retry Count	Number of retries on DREG Command message.	3	3	16
BS	T46	Time the BS waits for DREG-REQ in case of unsolicited idle mode initiation from BS.	—	—	—
MS	HO Process Optimization MS Timer Retries	Number of SBC-REQ and/or REG-REQ retries while waiting for unsolicited SBC-RSP and/or REG-RSP as part of MS network reentry and as indicated by HO Process Optimization message element of RNG-RSP.	3	—	—
BS	T47	PMC_RSP Timer: BS may send the PMC_RSP before T47 + 1 frames after BS receives PMC_REQ (Confirmation = 0) correctly.	8 frames	64 frames	1024 frames
MS, BS	Paging Interval Length	Time duration of paging interval of the BS.	1 frame	—	5 frames
MS	Max Dir Scan Time	Maximum scanning time of neighbor BSs by MS before reporting any results.	—	—	—
BS, MS	SAChallengeTimer	Time prior to resend of SA-TEK-Challenge.	0.5 s	1.0 s	2.0 s
BS, MS	SAChallengeMax-Resends	Maximum number of transmissions of SA-TEK-Challenge.	1	3	3

Table 554—Parameters and constants *(continued)*

System	Name	Time reference	Minimum value	Default value	Maximum value
MS, BS	SATEKTimer	Time prior to resend of SA-TEK-Request.	0.1 s	0.3 s	1.0 s
MS, BS	SATEKRequestMax-Resends	Maximum number of transmissions of SA-TEK-Request.	1	3	3
MS	MS Handover Retransmission Timer	MS Handover Retransmission Timer.	—	—	—
MS	Max Report Processing Time	Maximum time allowed from reception of REP-REQ until transmission of corresponding REP-RSP.	—	—	60 ms
MS	T48	Maximum duration that MS shall wait to receive UL transmission opportunities allocated by BS after keep-alive check operation starts in the frame specified by Next Periodic Ranging TLV encoding (refer to 6.3.20.7.1).	5 s	—	50 s
BS	T49	Maximum duration that BS shall wait to receive RNG-REQ messages from MS on UL transmission opportunities after keep-alive check operation starts in the frame specified by Next Periodic Ranging TLV encoding (refer to 6.3.20.7.1).	5 s	—	50 s
BS, MS	T55	This timer starts in the frame where the MS expects to receive the Fast Ranging IE. Upon expiration of this timer, the MS shall not expect the Target BS to grant an UL allocation via the Fast Ranging IE and shall release the HO ID.	8 frames	—	—
BS	LBS-ADV interval	Nominal time between transmission of LBS-ADV messages.	2 s	10 s	1800 s
BS	SII-ADV interval	Nominal time between transmission of SII-ADV messages.	—	10 s	30 s
BS	T56	The time allowed between the SBC response and PKM-REQ.	—	—	—
BS	T57	The time allowed between the PKM-REQ (Code=31) and PKM-REQ for security procedure initiation.	—	—	—
BS	DL_radio_resources_window_size	The number of frames over which the Available DL Radio Resources are calculated.	—	200	—

Table 554—Parameters and constants *(continued)*

System	Name	Time reference	Minimum value	Default value	Maximum value
BS	UL_radio_resources_ window_size	The number of frames over which the Available UL Radio Resources are calculated.	—	200	—
BS	MIH max cycles	The maximum number of cycles that an MS waits for an MIH response during initial entry. Refer to 6.3.24.	3	3	—
SS	Ranging Request Retries	Number of retries on ranging requests by RNG-REQ messages (OFDMA only)	3	—	16
MS	$N_{MS\_max\_neighbors}$	Maximum size of neighbor list.	32	—	255

10.2 PKM parameter values

Table 555 defines the ranges and default values for the PKM configuration and operational parameters.

Table 555—Operational ranges for privacy configuration settings

System	Name	Description	Minimum value	Default value	Maximum value
BS	AK Lifetime	Lifetime, in seconds, BS assigns to new AK	1 day (86 400 s)	7 days (604 800 s)	70 days (6 048 000 s)
BS	TEK Lifetime	Lifetime, in seconds, BS assigns to new TEK	30 min (1800 s)	12 h (43 200 s)	7 days (604 800 s)
SS	Authorize Wait Timeout	Auth Req retransmission interval from Auth Wait state	2 s	10 s	30 s
SS	Reauthorize Wait Timeout	Auth Req retransmission interval from Reauth Wait state	2 s	10 s	30 s
SS	Authorization Grace Time	Time prior to Authorization expiration SS begins reauthorization	5 min (300 s)	10 min (600 s)	35 days (3 024 000 s).
SS	Operational Wait Timeout	Key Req retransmission interval from Op Wait state	1 s	1 s	10 s
SS	Rekey Wait Timeout	Key Req retransmission interval from Rekey Wait state	1 s	1 s	10 s
SS	TEK Grace Time	Time prior to TEK expiration SS begins rekeying	5 min (300 s)	1 h (3600 s)	3.5 days (302 399 s)
SS	Authorize Reject Wait Timeout	Delay before resending Auth Request after receiving Auth Reject	10 s	60 s	10 min (600 s)

Table 556 defines the ranges and default values for the PKMv2 configuration and operational parameters.

Table 556—Operational ranges for privacy configuration settings for PKMv2

System	Name	Description	Minimum value	Default value	Maximum value
MS, BS	PMK or PAK prehandshake lifetime	The lifetime assigned to PMK when created	5 s	10 s	15 min
BS	PMK lifetime	If MSK lifetime is unspecified (i.e., by AAA server), PMK lifetime shall be set to this value	60 s	3600 s	86 400 s
BS, MS	SAChallenge-Timer	Time prior to resend of SA-TEK-Challenge	0.5 s	1.0 s	2.0 s
BS, MS	SaChallenge-MaxResends	Maximum number of transmissions of SA-TEK-Challenge	1	3	3
MS, BS	SATEKTimer	Time prior to resend of SA-TEK-Request	0.1 s	0.3 s	1.0 s
MS, BS	SATEKRequest-MaxResends	Maximum number of transmissions of SA-TEK-Request	1	3	3
BS	PAK Lifetime	Lifetime, in seconds, BS assigns to new PAK	1 day (86 400 s)	7 days (604 800 s)	70 days (6 048 000 s)
BS	TEK Lifetime	Lifetime, in seconds, BS assigns to new TEK	30 min (1800 s)	12 h (43 200 s)	7 days (604 800 s)
MS	Authorize Wait Timeout	PKMv2 RSA-Request retransmission interval from Auth Wait state	2 s	10 s	30 s
MS	Reauthorize Wait Timeout	PKMv2 RSA-Request retransmission interval from Reauth Wait state	2 s	10 s	30 s
MS	Authorization Grace Time	Time prior to Authorization expiration SS begins reauthorization	5 min (300 s)	10 min (600 s)	1 h (3 600 s)
MS	Operational Wait Timeout	PKMv2 Key-Request retransmission interval from Op Wait state	1 s	1 s	10 s
MS	Rekey Wait Timeout	PKMv2 Key-Request retransmission interval from Rekey Wait state	1 s	1 s	10 s
MS	TEK Grace Time	Time prior to TEK expiration SS begins rekeying	1 min (60 s)	5 min (300 s))	1 h (3 600 s)
MS	Authorize Reject Wait Timeout	Delay before resending PKMv2 RSA-Request after receiving PKMv2 RSA-Reject	10 s	60 s	10 min (600 s)
MS	EAP start timeout	Timer between resend of EAP start if reauthentication was not completed	10 s	10 s	60 s

For the purposes of protocol testing, it is useful to run the privacy protocol with timer values well below the low end of the operational ranges. The shorter timer values "speed up" privacy's clock, causing privacy protocol state machine events to occur far more rapidly than they would under an "operational" configuration. While privacy implementations need not be designed to operate efficiently at this accelerated privacy pace, the protocol implementation should operate correctly under these shorter timer values. Table 557 provides a list of shortened parameter values that are likely to be employed in protocol conformance and certification testing.

Table 557—Values for privacy configuration setting for protocol testing

Parameter	Shortened value [min (s)]
AK Lifetime	5 (300)
TEK Lifetime	3 (180)
Authorization Grace Time	1 (60)
TEK Grace time	1 (60)

The TEK Grace Time shall be less than half the TEK lifetime.

10.3 PHY-specific values

10.3.1 WirelessMAN-SC parameter and constant definitions

10.3.1.1 PS

For the WirelessMAN-SC PHY, a PS is the duration of four modulation symbols at the symbol rate of the DL transmission.

10.3.1.2 Symbol rate

The symbol rate shall be in the range 10–44.8 MBd, in increments of 100 kBd.

10.3.1.3 UL center frequency

The UL center frequency shall be a multiple of 250 kHz.

10.3.1.4 DL center frequency

The DL center frequency shall be a multiple of 250 kHz.

10.3.1.5 Tolerated poll jitter

For the 10–66 GHz PHY, the minimum value of the Tolerated Poll Jitter (see 11.13.12) shall be 3000 µs.

10.3.1.6 Allocation Start Time

Unit of Allocation Start Time shall be minislots from the start of the DL frame in which the UL-MAP message occurred.

10.3.1.7 Timing Adjust Units

The timing adjust units shall be 1/4 modulation symbols. During periodic ranging, the range of the value of this parameter shall be limited to ±2 modulation symbols.

10.3.2 *Reserved*

10.3.3 WirelessMAN-OFDM parameters and constant definitions

10.3.3.1 Uplink Allocation Start Time

The unit of allocation start time shall be PSs from the start of the DL frame in which the UL-MAP message occurred or from the start of the AAS zone if the UL MAP was transmitted in AAS zone. The minimum value specified for this parameter shall correspond to a point in the frame 1 ms after the last symbol of the UL-MAP.

10.3.3.2 PS

PSs are defined as in Equation (169).

$$PS = 4/F_s \tag{169}$$

10.3.3.3 Timing adjust units

The timing adjust units shall be $1/F_s$.

10.3.4 WirelessMAN-OFDMA parameters and constant definitions

10.3.4.1 Uplink Allocation Start Time

The unit of allocation start time shall be PSs from the start of the DL frame in which the UL-MAP message occurred. The minimum value specified for this parameter shall refer to the time indicated by T_{proc}, defined in Table 554.

F_s is the sampling frequency of the downlink.

10.3.4.2 PS

PSs are defined as Equation (170).

$$PS = 4/F_s \tag{170}$$

10.3.4.3 Timing adjust units

The timing adjust units shall be $1/F_s$.

10.4 Well-known addresses and identifiers

There are several CIDs defined in Table 558 that have specific meaning. These identifiers shall not be used for any other purposes.

It is noted that the multicast CID may have a format with Reduced CID on HARQ region.

Table 558—CIDs

CID	Value	Description
Ranging CID	0x0000	Used by SS and BS during ranging process.
Basic	0x0001– *m*	The same value is assigned to both the DL and UL connection.
Primary Management	*m*+1 – 2*m*	The same value is assigned to both the DL and UL connection.
Transport; Secondary Management	*2m*+1–0xFE9F	For the secondary management connection, the same value is assigned to both the DL and UL connection.
Multicast CIDs	0xFEA0–0xFEFE	For the DL multicast service, the same value is assigned to all MSs on the same channel that participate in this connection.
AAS Initial Ranging	0xFEFF	A BS supporting AAS shall use this CID when allocating an AAS ranging period (using AAS Ranging Allocation IE).
Multicast Polling	0xFF00–0xFFF9	A MS may be included in one or more multicast polling groups for the purpose of obtaining bandwidth via polling. These connections have no associated service flow.
Normal Mode Multicast	0xFFFA	Used in DL-MAP to denote bursts for transmission of DL broadcast information to normal mode MS.
Sleep Mode Multicast	0xFFFB	Used in DL-MAP to denote bursts for transmission of DL broadcast information to sleep mode MS. May also be used in MOB_TRF-IND messages.
Idle Mode Multicast	0xFFFC	Used in DL-MAP to denote bursts for transmission of DL broadcast information to idle mode MS. May also be used in MOB_PAG-ADV messages.
Fragmentable Broadcast	0xFFFD	Used by the BS for transmission of management broadcast information with fragmentation. The fragment subheader shall use 11-bit FSN on this connection.
Padding	0xFFFE	Used for transmission of padding information by SS and BS.
Broadcast	0xFFFF	Used for broadcast information that is transmitted on a DL to all SS.

11. TLV encodings

The following TLV encodings shall be used for parameters in both the configuration file (Clause 9) and MAC Management messages (6.3.2.3). TLV tuples with Type values not specified in this standard or specified as "*reserved*" shall be silently discarded. The SS and BS shall silently discard any TLV with an unknown type number. The length of the Type field shall be one byte.

The format of the Length field shall be per the "definite form" of ITU-T X.690. Specifically, if the actual length of the Value field is less than or equal to 127 bytes, then

— The length of the Length field shall be one byte,
— The MSB of the Length field shall be set to 0, and
— The other 7 bits of the Length field shall be used to indicate the actual length of the value field in bytes.

If the length of the Value field is more than 127 bytes, then

— The length of the Length field shall be one byte more than what is actually used to indicate the length of the value field in bytes,
— The MSB of the first byte of the Length field shall be set to 1,
— The other 7 bits of the first byte of the Length field shall be used to indicate the number of additional bytes of the Length field (i.e., excluding the first byte), and
— The remaining bytes (i.e., excluding the first byte) of the Length field shall be used to indicate the actual length of the Value field.

NOTE—Uniqueness of TLV Type values is assured by identifying the groups of IEEE 802.16 entities (configuration file and/or MAC management messages) that share references to specific TLV encodings. Disjoint collections of TLVs are formed that correspond to each such functional grouping. Each set of TLVs that are explicitly defined to be members of a compound TLV structure form additional collections. Unique type values are assigned to the member TLV encodings of each collection.

An additional collection, the Common encodings, is defined that consists of TLV encodings that are referenced by more than one of the functional groups. The Type values of the TLV members of this collection are assigned to assure uniqueness across all collections. This is the only collection for which global uniqueness is guaranteed.

In cases where a collection contains TLV encodings that are PHY-specification-specific, subcollections are formed that contain these TLV encodings. Type values assigned to members of each subcollection are assigned so that the values are unique within the subcollection and with non-PHY-specification-specific members of the collection. Type values are not unique across PHY-specific subcollections.

TLV Type values are assigned in accordance with the following rules:

— Common encodings start at 149, subsequent values are assigned in descending order.
— For individual collections, non-PHY-specification-specific encodings start at 1, subsequent values are assigned in ascending order.
— For individual collections, PHY-specification-specific encodings start at 150, subsequent values are assigned in ascending order.

Unless otherwise indicated, bit 0 is the LSB of the least significant byte for all TLVs with length of multiple bytes.

11.1 Common encodings

Common TLV fields and their associated type codes are presented in Table 559.

Table 559—Type values for common TLV encodings

Type	Name
149	HMAC Tuple
148	MAC Version Encoding
147	Current Transmit Power
146	Downlink Service Flow
145	Uplink Service Flow
144	Vendor ID Encoding
143	Vendor-Specific Information
142	SA-TEK-Update
141	CMAC tuple
140	Short-HMAC tuple
139	Enabled-Action-Triggered
138	SLPID_Update
137	Next Periodic Ranging
136	MAC Hash Skip Threshold
135	Paging Controller ID
134	Paging Information
133	NSP List
132	Verbose NSP Name List
131	MIHF frame
130	MIHF frame type
129	Query ID
128	MCID Pre-allocation and Transmission info
127	MCID Continuity and Transmission Info

11.1.1 Current Tx power

This parameter indicates the transmitted power used for the burst that carried the message. The parameter is reported in dBm and is quantized in 0.5 dBm steps ranging from –84 dBm (encoded 0x00) to 43.5 dBm (encoded 0xFF). Values outside this range shall be assigned the closest extreme. The parameter is only applicable to systems supporting the OFDM, or OFDMA PHY specifications. However, for the OFDM or OFDMA PHY, this value indicates the average transmitted power of each subcarrier for the burst that carried the message.

Type	Length	Value	Scope
147	1	Current transmit power	SBC-REQ, REP-RSP

11.1.2 Authentication tuples

An authentication tuple shall be the last item in identified management messages.

When no authorization is negotiated between an MS and a BS as an authorization policy, all authentication tuples (i.e., CMAC-Tuple, HMAC-Tuple, and short HMAC-Tuple) shall be omitted from MAC management messages unless otherwise required by the negotiated authorization policy support (see 11.8.4.2).

11.1.2.1 HMAC tuple

This parameter contains the HMAC Key Sequence Number concatenated with an HMAC Digest used for message authentication. The HMAC Key Sequence Number is stored in the 4 LSBs of the first byte of the HMAC Tuple, and the 4 MSBs are reserved. The HMAC-Tuple attribute format is shown in Table 560 and Table 561. When PKM is disabled (see 11.7.8.6), the content of this field shall be ignored and the message considered authenticated.

Table 560—HMAC Tuple definition

Type	Length	Value	Scope
149	21	See Table 561	DSx-REQ, DSx-RSP, DSx-ACK, REG-REQ, REG-RSP, RES-CMD, DREG-CMD, TFTP-CPLT, MOB_SLP-REQ, MOB_SLP-RSP, MOB_SCN-REQ, MOB_SCN-RSP, MOB_BSHO-REQ, MOB_MSHO-REQ, MOB_BSHO-RSP,MOB HO-IND, DREG-REQ, MOB_MIH-MSG

Table 561—HMAC tuple value field

Field	Length	Notes
reserved	4 bits	
HMAC Key Sequence Number	4 bits	
HMAC-Digest	160 bits	HMAC with SHA-1

11.1.2.2 CMAC Tuple

The CMAC Tuple attribute format is shown in Table 562 and Table 563.

A message received, that contains an CMAC Tuple, shall not be considered authentic if the length field of the tuple is incorrect, or if the locally computed value of the digest does not match the digest in the message.

NOTE—It would be appropriate for a MIB to increment an error count on receipt of a nonauthentic message so that management can detect an active attack.

Table 562—CMAC Tuple

Type	Length	Value	Scope
141	13 or 19	See Table 563	DSx-REQ, DSx-RSP, DSx-ACK, REG-REQ, REG-RSP, RES-CMD, DREG-CMD, TFTP-CPLT, MOB_SLP-REQ, MOB_SLP-RSP, MOB_SCN-REQ, MOB_SCN-RSP, MOB_BSHO-REQ, MOB_MSHO-REQ, MOB_BSHO-RSP, MOB_HO-IND, DREG-REQ, RNG-REQ, RNG-RSP, MOB_MIH-MSG, SBC-REQ, SBC-RSP, MOB_SCN-REP

The CMAC tuple is added to the RNG-REQ message only during handover, secure location update or network re-entry from idle mode. This tuple shall be included in the messages if the MS and the BS share a valid AK.

Table 563—CMAC Tuple definition

Field	Length (bits)	Note
Reserved	4	Set to 0
Key Sequence Number	4	AK sequence number
BSID	48	Only used in case of MDHO zone—optional
CMAC Packet Number Counter, CMAC_PN_*	32	This context is different UL, DL
CMAC Value	64	CMAC with AES-128

11.1.2.3 Short-HMAC tuple

This parameter contains the HMAC Key Sequence Number concatenated with an HMAC Digest used for message authentication. The HMAC Key Sequence Number is stored in the 4 LSBs of the first byte of the HMAC Tuple, and the 4 MSBs are reserved. The HMAC Tuple attribute format is shown in Table 564 and Table 565.

Table 564—Short-HMAC tuple

Type	Length	Value	Scope
140	*variable*	See Table 565	MOB_SLP-REQ, MOB_SLP-RSP, MOB_SCN-REQ, MOB_SCN-RSP, MOB_MSHO-REQ, MOB_BSHO-RSP, MOB_HO-IND, RNG-REQ, RNG-RSP, PKM-REQ, PKM-RSP

Table 565—Short-HMAC tuple definition

Field	Length (bits)	Note
Reserved	4	—
HMAC Key Sequence Number	4	—
HMAC Packet Number Counter HMAC_PN_*	32	Replay counter
Short-HMAC Digest	*variable*	0—Truncate HMAC to 8 bytes in Short HMAC Tuple 1—Truncate to 10 bytes 2—Truncate to 12 bytes

11.1.3 MAC version encoding

This parameter specifies the version of IEEE 802.16 to which the message originator conforms.

If the MAC version values exchanged between a BS and SS during network entry differ such that the BS version is greater than the SS version, the SS may attempt to perform normal operations. The BS may attempt to communicate with the SS per the version specified by the SS, or may decline to interoperate with the SS.

If the MAC version values exchanged between a BS and SS during network entry differ such that the BS version is smaller than the SS version, the BS may attempt to perform normal operations. The SS may attempt to communicate with the BS per the version specified by the BS, or may decline to interoperate with the BS.

Type	Length	Value	Scope
148	1	Version number of IEEE 802.16 supported on this channel. 0: *Reserved* 1–7: Indicates conformance with an earlier and/or obsolete version of IEEE Std 802.16 8: Indicates conformance with IEEE Std 802.16-2009 9–255: *Reserved*	PMP: DCD, RNG-REQ

11.1.4 Service flow descriptors

Information regarding the attributes of an UL or DL service flow shall be encapsulated in a compound structure identified by the appropriate TLV Type value. The contents of the compound structure are defined in 11.13.

Type	Length	Value	Scope
146	*variable*	Compound: DL service flow	DSx-REQ, DSx-RSP, DSx-ACK
145	*variable*	Compound: UL service flow	DSx-REQ, DSx-RSP, DSx-ACK

11.1.5 Vendor ID encoding

The value field contains the vendor identification specified by the 3-byte, vendor-specific organizationally unique identifier of the SS or BS MAC address.

When used as a subfield of the TLVs Vendor-specific information, Vendor-specific QoS parameters, Vendor-specific classification rule parameters, Vendor-specific PHS parameters, or Software upgrade descriptors, the Vendor ID encoding identifies the Vendor ID of the SSs that are intended to use this information. A vendor ID used in a Registration Request shall be the Vendor ID of the SS sending the request. A vendor ID used in a Registration Response shall be the Vendor ID of the BS sending the response.

Type	Length	Value	Scope
144	3	v1, v2, v3	REG-REQ (see 6.3.2.3.7), REG-RSP (see 6.3.2.3.8) SBC-REQ (see 6.3.2.3.23) SBC-RSP (see 6.3.2.3.24) DSx-REQ, DSx-RSP, DSx-ACK, Configuration File

11.1.6 Vendor-specific information

Vendor-specific information for SSs, if present, shall be encoded in the vendor-specific information field (VSIF) (type 143) using the Vendor ID field (11.1.5) to specify which tuples apply to which vendor's products. The Vendor ID shall be the first TLV embedded inside VSIF. If the first TLV inside VSIF is not a Vendor ID, then the TLV shall be discarded.

This configuration setting may appear multiple times. The same Vendor ID may appear multiple times. This configuration setting may be nested inside a Packet Classification Configuration Setting, a Service Flow Configuration Setting, or a Service Flow Response. However, there shall not be more than one Vendor ID TLV inside a single VSIF.

Type	Length	Value	Scope
143	*variable*	Per vendor definition	MAC Management message per vendor

Example: Configuration with vendor-A-specific fields and vendor-B-specific fields:

VSIF (143) + *n* (number of bytes inside this VSIF)
144 (Vendor ID Type) + 3 (length field) + Vendor ID of Vendor A
Vendor A Specific Type #1 + length of the field + Value #1
Vendor A Specific Type #2 + length of the field + Value #2

VSIF (143) + *n* (number of bytes inside this VSIF)
144 (Vendor ID Type) + 3 (length field) + Vendor ID of Vendor B
Vendor B Specific Type + length of the field + Value

11.1.7 Sleep mode specific information

11.1.7.1 Enabled-Action-Triggered

This value indicates the enabled action that MS performs upon reaching trigger condition in sleep mode. MS may include this TLV item in MOB_SLP-REQ message to request an activation of type of Power Saving Class. BS shall include this TLV in MOB_SLP-RSP message transmitted in response to the MOB_SLP-REQ message.

Type	Length	Value	Scope
139	1	Indicates action performed upon reaching trigger condition in sleep mode If bit 0 is set to 1, respond on trigger with MOB_SCN-REP If bit 1 is set to 1, respond on trigger with MOB_MSHO-REQ If bit 2 is set to 1, on trigger, MS starts neighboring BS scanning process by sending MOB_SCN-REQ Bit 3–bit 7: *Reserved*. Shall be set to 0.	MOB_SLP-REQ/RSP RNG-REQ/RSP

11.1.7.2 SLPID_Update

The SLPID_Update TLV specifies a new SLPID that replaces an old SLPID. This TLV may include multiple Old_New_SLPID values for the MSs negatively indicated in MOB_TRF-IND message.

Type	Length	Value	Scope
138	*variable*	See following table	RNG-RSP MOB_TRF-IND

Field	Length (bits)	Note
Old New SLPID	20	First 10 bits indicates old SLPID and the second 10 bits indicates new SLPID

11.1.7.3 Next Periodic Ranging

This value indicates the offset of the frame in which the periodic ranging will be performed with respect to the frame where MOB_SLP-RSP or RNG-RSP with ranging status = ‘success’ is transmitted. If MS receives MOB_SLP-RSP or RNG-RSP message with ‘Next Periodic Ranging’ = 0, it shall deactivate all active Power Saving Classes and return to Normal Operation.

Type	Length	Value	Scope
137	2	Offset in frames	MOB_SLP-RSP, RNG-RSP

11.1.8 Idle mode specific information

11.1.8.1 MAC Hash Skip Threshold

"MAC Hash Skip Threshold" indicates the maximum number of successive MOB_PAG-ADV messages without individual notification to the MS. If the value is 0xFF, the BS shall omit the MS MAC address hash of the MS with Action Code=0x00 in MOB_PAG-ADV messages. If the value is zero, the BS shall include the MS MAC address hash of the MS in every MOB_PAG-ADV message.

Type	Length	Value	Scope
136	1	0x00-0xFE: Initial value of the MAC Hash Skip Threshold Counter (refer to 6.3.23.6) 0xFF: This BS shall omit the MS MAC Address hash in MOB_PAG-ADV messages and MS does not start MAC Hash Skip Counter. (6.3.23.6 and 6.3.23.8.1.4)	RNG-REQ/RSP, DREG-REQ/CMD

11.1.8.2 Paging Controller ID

Type	Length	Value	Scope
135	6	This is a logical network identifier for the serving BS or other network entity retaining MS service and operational information and/or administering paging activity for the MS while in IDLE Mode.	RNG-REQ RNG-RSP DREG-CMD

11.1.8.3 Paging information

In case of RNG-RSP message, Paging Information shall be included if Location Update Response is set to 0x00 (Success of Idle Mode Location Update) and Paging Information has changed.

Type	Length	Value	Scope
134	7	Bits 0–15: PAGING_CYCLE—Cycle in which the paging message is transmitted within the paging group. Bits 16–31: PAGING_OFFSET—Determines the frame within the cycle from which the paging interval starts. Shall be smaller than PAGING_CYCLE value. Bits 32–47: Paging-group-ID—ID of the paging group to which the MS is assigned. Bits 48–55: Paging Interval Length—Max duration in frames of Paging Listening interval. Used in calculation of Paging listening interval; value shall be between 1 and 5 frames (default=2).	RNG-RSP DREG-CMD

11.1.9 SA-TEK-Update

The "SA-TEK-Update" field provides a translation table that allows an MS to update its security associations and TEK pairs so that it may continue security service after a handover to a new serving BS.

The "SA-TEK-Update" field is a compound TLV list where each entry identifies the primary and static SAs, their SA identifiers (SAID) and additional properties of the SA (e.g., type, cryptographic suite) that the MS is authorized to access. In case of HO, the details of any Dynamic SAs that the requesting MS was authorized in the previous serving BS are also included.

Additionally, in case of HO, for each active SA in previous serving BS, corresponding TEK, GTEK, and GKEK parameters are also included. Thus, SA_TEK_Update provides a shorthand method for renewing active SAs used by the MS in its previous serving BS. The TLVs specify SAID in the target BS that shall replace active SAID used in the previous serving BS and also "older" TEK-Parameters and "newer" TEK Parameters relevant to the active SAIDs. The update may also include multicast/broadcast Group SAIDs (GSAIDs) and associated GTEK-Parameter pairs. The new SAID field shall refer to SAID assignments by the new BS. The mapping of these new SAIDs to the SAIDs assigned by the previous serving BS is controlled by the SAID Update TLV (11.7.17) and is further controlled by the rules for SAID updating outlined in 6.3.21.2.8.1.6.6.

In case of unicast SAs, the TEK-Parameters attribute contains all of the keying material corresponding to a particular generation of a SAID's TEK. THis would include the TEK, the TEK's remaining key lifetime, its key sequence number, and the cipher block chaining (CBC) initialization vector. The TEKs are encrypted with KEK.

In case of group or multicast SAs, the TEK-Parameters attribute contains all of the keying material corresponding to a particular generation of a GSAID's GTEK. This would include the newer GTEK parameter pairs, GTEK's remaining key lifetime, the GTEK's key sequence number, and the cipher block chaining (CBC) initialization vector. The type and length of the GTEK are equal to the ones of the TEK. The GKEK should be identically shared within the same multicast group or the broadcast group. The GTEKs are encrypted with GKEK and GKEKs are encrypted with KEK.

Multiple iterations of these TLVs may occur suitable to re-creating and reassigning all active SAs and their (G)TEK pairs for the MS from its previous serving BS. If any of the Security Associations parameters change, then those Security Associations parameters encoding TLVs that have changed will be added.

This TLV may be sent in a single frame along with unsolicited REG-RSP.

The following TLV values shall appear in each SA TEK Update TLV.

Name	Type	Length (1 byte)	Value	Scope
SA TEK Update	142	*variable*	Compound	PKM-RSP REG-RSP

Name	Type	Length (byte)	Value
SA-TEK-Update-Type	142.1	1	1: TEK parameters for an SA 2: GTEK parameters for a GSA 3–255: Reserved
New SAID	142.2	2	New SAID after handover to new BS

Name	Type	Length (byte)	Value
Old TEK/GTEK-Parameters	142.4	*variable*	"Older" generation of key parameters relevant to (G)SAID. The compound fields contains the sub-attributes as defined in Table 595.
New TEK/GTEK-Parameters	142.5	*variable*	"Newer" generation of key parameters relevant to (G)SAID. The compand fields contains the sub-attributes as defined in Table 595.
GKEK-Parameters	142.6	*variable*	GKEK, its lifetime, and its sequence number for the corresponding GSAID.

All sub-attributes included in the TEK-Parameters (Old TEK/GTEK-Parameters, New TEK/GTEK-Parameters and GKEK-Parameters are defined in 11.9.

11.1.10 NSP List encodings

11.1.10.1 NSP List

The NSP LIST TLV contains one or more 24-bit Network Service Provider Identifiers.

Name	Type	Length	Value	Scope
NSP List TLV	133	$3 \times n$	Including *n*, 24 bit Network Service Provider IDs, n is greater than or equal to 1.	SBC-RSP, SII-ADV

11.1.10.2 Verbose NSP Name List

The Verbose NSP Name List is a compound list of the verbose names of the Network Service Providers as indicated by the NSP List.

Name	Type	Length	Value	Scope
Verbose NSP Name List	132	*variable*	List of verbose names of the Network Service Provider(s). The value of Verbose NSP Name List is a compound list of verbose NSP name lengths and verbose NSP names. The order of the Verbose NSP Name Lengths and Verbose NSP Names presented in the Verbose NSP Name List TLV shall be in the same order as the NSP IDs presented in the NSP List TLV.	SBC-RSP, SII-ADV

Field	Length	Value
Verbose NSP Name Length	1	Length of the Verbose NSP Name.
Verbose NSP Name	*variable*	The verbose name of the NSP. The Verbose NSP Name shall have the length as presented by the correspond-ing Verbose NSP Name Length.

11.1.11 MIH message encodings

11.1.11.1 MIHF frame

This TLV is used to carry an MIHF frame. MIHF frames are specified in IEEE Std 802.21.

Type	Length	Value	Scope
131	variable	An MIHF frame. MIHF frames are specified in IEEE Std 802.21.	MOB_MIH-MSG PKM-REQ PKM-RSP SII-ADV

11.1.11.2 MIHF frame type

This TLV indicates the service type of MIHF frame.

Type	Length	Value	Scope
130	1	0: ES/CS MIH Capability Discovery 1: Event Service 2: Command Service 3: Information Service 4–255: *Reserved*	MOB_MIH-MSG PKM-REQ PKM-RSP SII-ADV

11.1.11.3 Query ID

The BS sends this TLV to the MS when it acknowledges receipt of an MIH Initial Request message encapsulating an MIH query, and sends it again when it sends the MIH response to the MIH query. The MS uses this TLV to correlate the MIH response with the MIH query.

Type	Length	Value	Scope
129	1	This value uniquely identifies a pending MIH query at the BS. Since MIH responses may be broadcast, the value of Query ID shall be unique per BS.	PKM-RSP SII-ADV

11.1.12 MCID Update Management encoding

The TLV encodings defined in this subclause are specific to the MBS_MAP (6.3.2.3.52) and MOB_NBR-ADV (6.3.2.3.42) MAC management message. These TLVs provide information regarding several MBS zones and the MCID used in them.

11.1.12.1 MCID pre-allocation and transmission info

This TLV indicates the mapping of MCIDs used in the current MBS Zone ID to new MCID within a neighboring MBS zone and information regarding the MBS map transmission in the neighboring MBS zone.

Type	Length (bytes)	Value	Scope
128	*variable* $(3 + N \times 4)$	See Table 566	MBS_MAP, MOB_NBR-ADV

Table 566—MCID Pre-allocation and Transmission Info definition

Field	Length (bits)	Note
MBS_ZONE_ID	8	MBS zone identifier for current MBS Zone (bit 7 is not part of identifier and set to 0)
Neighboring_MBS_ZONE_ID	7	MBS zone identifier for neighboring MBS Zone
Neighboring zone type	1	0 – Neighbor MBS zone supports macro-diversity 1 – Neighbor MBS zone does not support macro-diversity
Next_MBS_Frame_Offset_Delta	4	Signed integer: –8 to +7. This value is added to the Next_MBS_Frame_Offset in MBS_DATA_IE, Extended_MBS_DATA_IE, or MBS_DATA_Time_Diversity_IE to obtain the frame offset to the next MBS MAP message in the neighboring MBS Zone. The range of this value is –7 to 7 frames. The value of –8 indicates that there is no indication regarding the transmission in the neighboring zone.

Table 566—MCID Pre-allocation and Transmission Info definition *(continued)*

Time + Frequency Diversity Supported	1	0 MBS burst transmissions in neighboring MBS Zones not guaranteed to be useful for time and frequency diversity reception. – MBS burst transmissions in neighboring MBS Zones carry the same SDU/SDU-fragments in allocations for corresponding MBS MAP messages and therefore may be used for time and frequency diversity reception.
Reserved	3	Set to 0
List of MCID Mappings	*variable* (*N*×4)	Current_MCID(1), New_MCID(1), ... Current_MCID(N), New_MCID(N)

A value of 0xFFFF in the New_MCID field indicates that the service flow corresponding to Current_MCID is not available in the MBS Zone indicated by the TLV.

To receive the MBS MAP in the neighboring MBS zone, the MS is required to receive the MBS_MAP_IE in the DL MAP in the neighboring MBS zone. This is performed using the information in the "Next MBS frame offset" field in the MBS data allocation IE (i.e., MBS_DATA_IE, Extended_MBS_DATA_IE, and MBS_DATA_Time_Diversity_IE) and the Next_MBS_Frame_Offset_Delta field in the TLV. The MBS_MAP_IE is located in the frame offset indicated by the sum of the two fields (Next MBS frame offset field in the MBS data allocation IE and Next_MBS_Frame_Offset_Delta field in the TLV).

11.1.12.2 MCID Continuity and Transmission Info

This field indicates a certain MCID stays the same in one or more MBS Zones and information regarding the MBS map transmission in the neighboring MBS zone.

Type	Length (bytes)	Value	Scope
127	*Variable* (3+*N*×2)	See Table 567	MBS_MAP, MOB_NBR-ADV

Table 567—MCID Continuation List definition

Field	Length (bits)	Note
MBS_ZONE_ID	8	MBS zone identifier for current MBS Zone (bit 7 is not part of identifier and set to 0)
Neighboring_MBS_ZONE_ID	7	MBS zone identifier for neighboring MBS Zone
Neighboring zone type	1	0 – Neighbor MBS zone supports macro-diversity 1 – Neighbor MBS zone does not support macro-diversity

Table 567—MCID Continuation List definition *(continued)*

Next_MBS_Frame_Offset_Delta	4	Signed integer: –8 to +7. This delta value is added to the Next_MBS_Frame_Offset in MBS_DATA_IE, Extended_MBS_DATA_IE, and MBS_DATA_Time_Diversity_IE to obtain the frame offset to the next MBS MAP message in the neighboring MBS Zone. The range of this value is –7 to 7 frames. Value of –8 indicates that there is no indication regarding the transmission in the neighboring zone.
Time + Frequency Diversity Supported	1	0 MBS burst transmissions in neighboring MBS Zones not guaranteed to be useful for time and frequency diversity reception. – MBS burst transmissions in neighboring MBS Zones carry the same data bursts in allocations for corresponding MBS MAP messages and therefore may be used for time and frequency diversity reception.
No_MCID_Update_Info_Present	1	If N is not equal to 0 this flag is not valid and shall be set to 0 In case N = 0: 1 – This TLV does not carry any information regarding MCID update 0 – All current MCIDs are valid also in new MBS zone
Reserved	2	Set to 0
List of MCIDs Continued	*Variable* (N×2)	Current_MCID(1), …, Current_MCID(N)

To receive the MBS MAP in the neighboring MBS zone, the MS is required to receive the MBS_MAP_IE in the DL MAP in the neighboring MBS zone. This is performed using the information in the "Next MBS frame offset" field in the MBS data allocation IE (i.e., MBS_DATA_IE, Extended_MBS_DATA_IE, and MBS_DATA_Time_Diversity_IE) and the Next_MBS_Frame_Offset_Delta field in the TLV. The MBS_MAP_IE is located in the frame offset indicated by the sum of the two fields (Next MBS frame offset field in the MBS data allocation IE and Next_MBS_Frame_Offset_Delta field in the TLV).

If there are no MCIDs listed in this TLV and "No MCID Update Info Present" field is set to zero then all MCIDs within the current MBS Zone stay the same in the neighboring MBS Zone indicated by the TLV and the "Next_MBS_Frame_Offset_Delta" applies to all MCIDs.

11.2 Configuration file encodings

These settings are found only in the configuration file. They shall not be forwarded to the BS in the Registration Request.

11.2.1 SS MIC configuration setting

This value field contains the SS MIC code. This is used to detect unauthorized modification or corruption of the configuration file.

Type	Length	Value
1	20	d1 d2..... d20

11.2.2 Software upgrade descriptors

This field defines the parameters associated with software upgrades. It is composed of one or more upgrade descriptors. An upgrade descriptor is defined by the set of all encapsulated tags defined in 11.2.2.1 through 11.2.2.4, occurring in order in the TFTP file. A new upgrade descriptor begins with the occurrence of the Vendor ID TLV.

Type	Length	Value
2	*Variable*	Compound

When a managed SS decodes a descriptor with a matching Vendor ID, Hardware ID, and Software version different than the one currently running, it may initiate a TFTP transfer to upgrade its software.

11.2.2.1 Vendor ID

This value identifies the managed SS vendor to which the software upgrade is to be applied. Its format and value is described in 11.1.5.

Type	Length	Value
2.144	3	v1, v2, v3

11.2.2.2 Hardware ID

This value identifies the hardware version to which the software upgrade is to be applied. This value is administered by the vendor identified by the Vendor ID field.

Type	Length	Value
2.1	*n*	Hardware ID (string)

11.2.2.3 Software version

This value identifies the software version of the software upgrade file. The value is administered by the vendor identified in the Vendor ID field. It should be defined by the vendor to be unique with respect to a given Hardware ID.

Type	Length	Value
2.2	*n*	Software version (string)

11.2.2.4 Upgrade filename

The filename of the software upgrade file for the managed SS. The filename is a fully qualified directory-path name that is in a format appropriate to the server. There is no requirement that the character string be null-terminated; the length field always identifies the end of the string. The file is expected to reside on a TFTP server identified in a configuration setting option defined in 11.2.3.

Type	Length	Value
2.3	*n*	Filename

11.2.3 Software upgrade TFTP server

This object is the IP address of the TFTP server on which the software upgrade file for the SS resides.

Type	Length	Value
3	4 or 16	IP Address

11.2.4 TFTP Server Timestamp

This is the sending time of the configuration file in seconds. The definition of time is as in IETF RFC 868.

Type	Length	Value
4	4	Number of seconds since 00:00 1 January 1900

NOTE—The purpose of this parameter is to prevent replay attacks with old configuration files.

11.2.5 MIB object write-access control

SS support of MIB object write-access control is recommended. This object makes it possible for an operator to disable SNMP “Set” access to individual Management Information Base (MIB) objects while a SS is connected to that operator network. This behavior is not persistent and terminates when the SS deregisters or loses connection to the BS. Each instance of this object controls access to all of the writable

MIB objects whose Object ID (OID) prefix matches. The object may be repeated to disable access to any number of MIB objects, where, n is the size of the ASN.1 Basic Encoding Rules [ISO 8825] encoding of the OID prefix plus one byte for the control flag.

Type	Length	Value
10	*n*	OID prefix plus control flag

The control flag may take the following values:

Value	Description
0	allow write-access
1	disallow write-access

Any OID prefix may be used. The Null OID 0.0 may be used to control access to all MIB objects with MAX-ACCESS as writable.

When multiple instances of this object are present and overlap, the longest (most specific) prefix has precedence. Thus, one example might be as follows:

someTable	disallow write-access
someTable.1.3	allow write-access

This example disallows MAX-ACCESS write-access to all writable objects in someTable except for someTable.1.3.

An attempt to set the MAX-ACCESS write-access of an unsupported MIB element or prefix shall be silently discarded.

11.2.6 Set MIB Object

This object allows arbitrary MIB objects to be Set via the TFTP configuration file, where the value is an ASN.1 VarBind as defined in IETF RFC 1157. The VarBind is encoded in ASN.1 Basic Encoding Rules (just as it would be if part of an SNMP Set request, for example).

Type	Length	Value
11	*n*	variable binding

SS support of Set MIB Object is recommended, but is not required. The SS shall treat this object as if it were part of an “Set” Request for the applicable MIB variable with the following caveats:

a) It shall treat the request as fully authorized (it shall not refuse the request for lack of privilege).
b) Attempt to write to MAX-ACCESS read-only MIB variables will be disallowed and silently discarded. Temporary MAX-ACCESS write restriction due to application of MIB object write-access control 11.2.5 shall not be considered when evaluating attempt to write to MIB objects for this purpose.
c) Writes to persistent MIB variables shall only update the "working" copy. A MIB value that supports persistence shall not update its nonvolatile store for the indicated MIB object; such updates are only supported when the SS is connected and registered to the BS.

This object may be repeated with different VarBinds to "Set" a number of MIB objects. All such Sets shall be treated as if simultaneous.

Each VarBind shall be limited to 255 bytes.

11.3 UCD management message encodings

The UCD message encodings are specific to the UCD message (see 6.3.2.3.3).

11.3.1 UCD channel encodings

UCD channel encodings shared across PHY specifications are provided in Table 568.

For FDD/H-FDD operation, if two TLVs for a particular type occur in the UCD, the first TLV corresponds to H-FDD group 1, while the second TLV corresponds to H-FDD group 2.

Table 568—UCD channel encodings

Name	Type (1 byte)	Length	Value
Uplink_Burst_Profile	1		May appear more than once (see 6.3.2.3.3). The length is the number of bytes in the overall object, including embedded TLV items.
Contention-based reservation timeout	2	1	Number of UL-MAPs to receive before contention-based reservation is attempted again for the same connection.
Frequency	5	4	UL center frequency (kHz).
HO_ranging_start[a]	7	1	Initial backoff window size for MS performing initial ranging during HO process, expressed as a power of 2. Range: 0–15 (the highest order bits shall be unused and set to 0).

Table 568—UCD channel encodings *(continued)*

Name	Type (1 byte)	Length	Value
HO_ranging_end[a]	8	1	Final backoff window size for MS performing initial ranging during HO process, expressed as a power of 2. Range: 0–15 (the highest order bits shall be unused and set to 0).
Available UL Radio Resources	24	1	Indicates the average ratio of non-assigned UL radio resources to the total usable UL radio resources. The average ratio shall be calculated over a time interval defined by the UL_radio_resources_window_size parameter (Table 342). The reported average ratio will serve as a relative load indicator. This value can be biased by the operator provided it reflects a consistent representation of the average loading condition of BSs across the operator network. 0x00: 0% 0x01: 1% ... 0x64: 100% 0x65–0xFE : reserved, 0xFF indicates no information available

[a] OFDM, OFDMA (mobile only)

The UCD channel encodings unique to each PHY specifications are provided in Table 569, Table 570, and Table 571.

Table 569—UCD PHY-specific channel encodings—WirelessMAN-SC

Name	Type (1 byte)	Length	Value
Symbol rate	150	2	Symbol rate, in increments of 10 kBd.
SSTG	151	1	The time, as measured at the BS and expressed in PSs, between the end of an SS burst and the beginning of the subsequent SS burst. The SS shall take this into account when determining the length of the burst. The SSTG consumes the last *n* PS of the intervals allocated in the UL-MAP. In other words, UL-MAP entries include the time for a burst's ramp down.
Roll-off factor	152	1	2 = 0.25 0, 1, 3–255 *Reserved*
Power adjustment rule	153	1	0 = Preserve Peak Power 1 = Preserve Mean Power Describes the power adjustment rule when performing a transition from one burst profile to another.
Minislot Size	154	1	The size *n* of the minislot for this UL channel in units of physical slots (PSs). Allowable values are $n = 2^m$, where *m* is an integer ranging from 0 through 7.
UL channel ID	155	1	The identifier of the UL channel to which this message refers. This identifier is arbitrarily chosen by the BS and is only unique within the MAC domain.

Table 569—UCD PHY-specific channel encodings—WirelessMAN-SC *(continued)*

Name	Type (1 byte)	Length	Value
Bandwidth request opportunity size	157	2	Size (in units of PS) of PHY payload that SS may use to format and transmit a BR message in a contention request opportunity. The value includes all PHY overhead as well as allowance for the MAC data the message may hold.
Contention ranging request opportunity size	158	2	Size (in units of PS) of the transmission opportunity that an SS may use to transmit a RNG-REQ message in a contention ranging request opportunity. The value includes all PHY overhead as well as the maximum SS/BS round trip propagation delay.
Contention ranging request burst size	159	2	Size (in units of PS) of PHY bursts that an SS shall use to transmit a RNG-REQ message in a contention ranging request opportunity.

Table 570—UCD PHY-specific channel encodings—WirelessMAN-OFDM

Name	Type (1 byte)	Length	Value
Subchannelization REQ Region-Full Parameters	150	1	Bits 0…2 Number of subchannels used by each Tx opportunity when REQ Region-Full is allocated in subchannelization region, per the following enumeration: 0: 1 subchannel. 1: 2 subchannels. 2: 4 subchannels. 3: 8 subchannels. 4: 16 subchannels. 5–7: Shall not be used. Bits 3…7: Number of OFDM symbols used by each Tx opportunity when REQ Region-Full is allocated in subchannelization region.
Subchannelization focused contention codes	151	1	Number of contention codes (C_{SE}) that shall only be used to request a subchannelized allocation. Default value 0. Allowed values 0–8.
Subchannelized initial ranging capable BS	152	1	Indicator that the BS is capable of receipt of subchannelized initial ranging requests (see 8.3.7.2). Value 0 (default) indicates the BS is not capable of receiving subchannelized initial ranging request. Value 1 indicates the BS is capable of receiving subchannelized initial ranging request. All subchannelization capable BSs shall be capable of receiving the subchannelized initial ranging request. Values 2–255 *Reserved.*
Contention ranging request opportunity size	153	2	Size (in units of PS) of the transmission opportunity that an SS may use to transmit a RNG-REQ message in a contention ranging request opportunity. The value includes all PHY overhead as well as the maximum SS/BS round trip propagation delay.
Contention ranging request burst size	154	2	Size (in OFDM symbols) of PHY bursts that an SS shall use to transmit a RNG-REQ message in a contention ranging request opportunity. Default value: 4.

Table 571—UCD PHY-specific channel encodings—WirelessMAN-OFDMA

Name	Type (1 byte)	Length	Value
UL AMC Allocated physical bands bitmap	18	6	A bitmap describing the physical bands allocated to the segment in the UL. When using the optional AMC permutation with regular MAPs (see 8.4.6.3). The LSB of the least significant byte shall correspond to the physical band 0. For any bit that is not set, the corresponding physical bands shall not be used by the SS on that segment. When this TLV is not present, BS may allocate any physical bands to an SS.
Initial ranging codes	150	1	Number of initial ranging CDMA codes. Possible values are 0–255.[a]
Periodic ranging codes	151	1	Number of periodic ranging CDMA codes. Possible values are 0–255.[a]
Bandwidth request codes	152	1	Number of BR codes. Possible values are 0–255.[a]
Periodic ranging backoff start	153	1	Initial backoff window size for periodic ranging contention, expressed as a power of 2. Range: 0–15 (the highest order bits shall be unused and set to 0).
Periodic ranging backoff end	154	1	Final backoff window size for periodic ranging contention, expressed as a power of 2. Range: 0–15 (the highest order bits shall be unused and set to 0).
Start of ranging codes group	155	1	Indicates the starting number, S, of the group of codes used for this UL. If not specified, the default value shall be set to zero. All the ranging codes used on this UL shall be between S and ((S+O+N+M+L) mod 256) where N is the number of initial ranging codes M is the number of periodic ranging codes L is the number of BR codes O is the number of HO ranging codes The range of values is $0 \le S \le 255$.
Permutation base	156	1	Determines the UL_PermBase parameter for the subcarrier permutation to be used on this UL channel. UL_PermBase = 7 LSBs of Permutation base.
UL allocated subchannels bitmap	157	9	This is a bitmap describing the physical subchannels allocated to the segment in the UL, when using the UL PUSC permutation. The LSB of the least significant byte shall correspond to subchannel 0. For any bit that is not set, the corresponding subchannel shall not be used by the SS on that segment. When this TLV is not present, BS may allocate any subchannels to an SS.
Optional permutation UL Allocated subchannels bitmap	158	13	This is a bitmap describing the physical subchannels allocated to the segment in the UL, when using the UL optional PUSC permutation (see 8.4.6.2.5). The LSB of the least significant byte shall correspond to subchannel 0. For any bit that is not set, the corresponding subchannel shall not be used by the SS on that segment. When this TLV is not present, BS may allocate any subchannels to an SS.
Band AMC Allocation Threshold	159	1	Decibel unit. Threshold of the maximum of the standard deviations of the individual bands CINR measurements over time to trigger mode transition from normal subchannel to band AMC. Range: –128 to +127 dB

Table 571—UCD PHY-specific channel encodings—WirelessMAN-OFDMA *(continued)*

Name	Type (1 byte)	Length	Value
Band AMC Release Threshold	160	1	Decibel unit. Threshold of the maximum of the standard deviations of the individual bands CINR measurements over time to trigger mode transition from band AMC to normal subchannel. Range: –128 to +127 dB
Band AMC Allocation Timer	161	1	Frame unit. Minimum required number of frames to measure the average and standard deviation for the event of band AMC triggering. Range: 0 to 255 frames
Band AMC Release Timer	162	1	Frame unit. Minimum required number of frames to measure the average and standard deviation for the event triggering from band AMC to normal subchannel. Range: 0 to 255 frames
Band Status Reporting MAX Period	163	1	Frame unit. Maximum period between refreshing the band CINR measurement by the unsolicited REP-RSP. Range: 0 to 255 frames
Band AMC Retry Timer	164	1	Frame unit. Backoff timer between consecutive mode transitions from normal subchannel to band AMC when the previous request is failed. Range: 0 to 255 frames
Safety Channel Allocation Threshold	165	1	Decibel unit.
Safety Channel Release Threshold	166	1	Decibel unit.
Safety Channel Allocation Timer	167	1	Frame unit.
Safety Channel Release Timer	168	1	Frame unit.
Bin Status Reporting MAX Period	169	1	Frame unit.
Safety Channel Retry Timer	170	1	Frame unit.
HARQ ACK delay for DL burst	171	1	1 = One frame offset. 2 = Two frames offset. 3 = Three frames offset.
CQICH Band AMC-Transition Delay	172	1	Frame unit. Range: 0 to 255 frames
Maximum retransmission	174	1	Maximum number of retransmission in UL HARQ. Default value shall be 4 retransmissions.
Normalized C/N override	175	8	This is a list of numbers, where each number is encoded by one nibble, and interpreted as a signed integer. The nibbles correspond in order to the list define by Table 514, starting from the second line, so that the LS nibble of the least significant byte corresponds to the second line in the table. The number encoded by each nibble represents the difference in normalized C/N relative to the previous line in the table.

Table 571—UCD PHY-specific channel encodings—WirelessMAN-OFDMA *(continued)*

Name	Type (1 byte)	Length	Value
Size of CQICH_ID field	176	1	0 = 0 bits(default) 1 = 3 bits 2 = 4 bits 3 = 5 bits 4 = 6 bits 5 = 7 bits 6 = 8 bits 7 = 9 bits 8...255 = *Reserved*
Normalized C/N override 2	177	8	Bits 0–7: It shall be interpreted as signed integer in dB. It corresponds to the normalized C/N value in the first line (counting except for header cell of table). Bits 8–63: This is a list of numbers, where each number is encoded by one nibble, and interpreted as a signed integer. The nibbles correspond to the order of the list define by Table 514, starting from the second line (counting except for the header cell of table), so that the LS nibble of the least significant byte corresponds to the second line in the table. The number encoded by each nibble represents the difference in normalized C/N relative to the previous line in the table and shall be interpreted as a signed integer in dB.
Band AMC Entry Average CINR	185	1	Decibel unit. Threshold of the average CINR of the whole bandwidth to trigger mode transition from normal subchannel to AMC. Range: –128 to +127 dB
$\text{UpperBound}_{\text{AAS\_PREAMBLE}}$	186	1	Signed in units of 0.25 dB.
$\text{LowerBound}_{\text{AAS\_PREAMBLE}}$	187	1	Signed in units of 0.25 dB.
Allow AAS Beam Select Messages	188	1	Boolean to indicate whether unsolicited AAS Beam Select messages (see 6.3.2.3.36) may be sent by the MS. The default value is 1, with possible values of 0–1: 0 – MS should not send AAS Beam Select Messages 1 – MS may send AAS Beam Select Messages
Use CQICH indication flag	189	1	The *N* MSB values of this field represents the *N*-bit payload value on the fast-feedback channel reserved as indication flag for MS to initiate feedback on the feedback header, where *N* is the number of payload bits used for S/N measurement feedback on the fast-feedback channel. The value shall not be set to all zeros.
MS-specific up power offset adjustment step	190	1	Unsigned in units of 0.01 dB.
MS-specific down power offset adjustment step	191	1	Unsigned in units of 0.01 dB.
Minimum level of power offset adjustment	192	1	Signed in units of 0.1 dB.
Maximum level of power offset adjustment	193	1	Signed in units of 0.1 dB

Table 571—UCD PHY-specific channel encodings—WirelessMAN-OFDMA *(continued)*

Name	Type (1 byte)	Length	Value
Handover Ranging Codes	194	1	Number of HO ranging CDMA codes. Possible values are 0–255.
Initial ranging interval	195	1	Number of frames between initial ranging interval allocation.
Tx Power Report	196	3	Bits 0–3: Tx_Power_Report_Threshold, It is unsigned integer and shall be read in dB scale. When “0b1111” it means infinite. Bits 4–7: It is unsigned integer whose value is d. Its value *d* shall be interpreted as Tx_Power_Report_Interval =2^d. When “0b1111” it means infinite. Bits 8–11: α_{p_avg} in multiples of 1/16 (range [1/16,16/16]) Bits 12–15: Tx_Power_Report_Threshold, It is unsigned integer and shall be read in dB scale. When “0b1111” it means infinite. It shall be used when CQICH is allocated to the SS. Bits 16–19: It is unsigned integer whose value is d. Its value *d* shall be interpreted as Tx_Power_Report_Interval =2^d frames. When “0b1111” it means infinite. It shall be used when CQICH is allocated to the SS. Bits 20–23: α_{p_avg} in multiples of 1/16 (range [1/16,16/16]), It shall be used when CQICH is allocated to the SS.
Normalized C/N for Channel Sounding	197	1	Signed integer for the required C/N (dB) for Channel Sounding. This value shall override C/N for the channel sounding in Table 515.
Initial_ranging_back off_start	198	1	Initial backoff window size for initial ranging contention, expressed as a power of 2. Values of *n* range 0–15 (the highest order bits shall be unused and set to 0) This TLV shall be used in NBR-ADV message only to represent corresponding values that appear in UCD message fields.
Initial_ranging_back off_end	199	1	Final backoff window size for initial ranging contention, expressed as a power of 2. Values of *n* range 0–15 (the highest order bits shall be unused and set to 0) This TLV shall be used in NBR-ADV message only to represent corresponding values that appear in UCD message fields.
Bandwidth_request_ backoff_start	200	1	Initial backoff window size for contention BRs, expressed as a power of 2. Values of *n* range 0–15 (the highest order bits shall be unused and set to 0). This TLV shall be used in NBR-ADV message only to represent corresponding values that appear in UCD message fields.
Bandwidth_request_ backoff_end	201	1	Final backoff window size for contention BRs, expressed as a power of 2. Values of *n* range 0–15 (the highest order bits shall be unused and set to 0). This TLV shall be used in NBR-ADV message only to represent corresponding values that appear in UCD message fields.
Uplink_burst_profile for multiple FEC types	202	1	May appear more than once (see 6.3.2.3.3 and 8.4.5.5). The length is the number of bytes in the overall object, including embedded TLV items.

Table 571—UCD PHY-specific channel encodings—WirelessMAN-OFDMA *(continued)*

Name	Type (1 byte)	Length	Value
UL PUSC Subchannel Rotation	203	1	Value: Indicates the default setting of subchannel rotation in the UL frame. Value 0 (default) indicates UL PUSC subchannel rotation is enabled. Value 1 indicates UL PUSC subchannel rotation is disabled. The default setting of subchannel rotation is only valid in zones that are not preceded by an OFDMA uplink Zone IE. If this TLV is not present, the default setting of UL PUSC subchannel rotation is enabled.
Relative_Power_Offset_For_UL_HARQ_burst	205	1	Bits 0–3: Offset for HARQ burst relative to non-HARQ burst (signed integer in 0.5 dB unit) Bits 4–7: reserved (Shall be set to zero) If this TLV is not present, the default value of power offset shall be equal to zero.
Relative Power Offset for UL Burst Containing MAC Management Message	206	1	Bits 0–2: Power offset for UL burst containing a MAC management message relative to the normal traffic burst (unsigned integer in 0.5 dB units). Bits 3–7: reserved (Shall be set to zero). If this TLV is not present, the default value of the power offset shall be equal to zero.
UL_initial_transmit_timing	207	1	0 b00000000 : The timing is referenced to the 'UL_Allocation_Start_Time' 0 b00000001 -0 b11111110 : Timing offset in unit of 2 PSs (two physical slots) before 'UL_Allocation_Start_Time' to which the MS timing shall be referenced. If this value is larger than 'TTG-SSRTG', then MS shall consider this value as 'TTG-SSRTG'. For example, 0 b00000001 means 'initial timing reference = UL_Allocation_Start_Time – 2 PSs' 0 b11111111 : The timing is referenced to the 'UL_Allocation_Start_Time-TTG+SSRTG'. If this TLV is not present, the default value of initial timing at MS shall be 'UL_Allocation_Start_Time'
UL PHY Mode ID	208	2	Bits 0–7: Channel bandwidth in units of 125 kHz; Bits 8–10: FFT size 0b000= 2048 0b001= 1024 0b010=512 0b011=128 0b100 – 0b111: *reserved* Bits 11–13: Cycle Prefix (CP) 0b000= 1/4 0b001= 1/8 0b010=1/16 0b011=1/32 0b100 – 0b111: *reserved* Bits 14–15: *reserved* NOTE—This TLV shall only be used for FDD operation. This TLV shall be included only if the UL channel bandwidth is different from the DL channel bandwidth. When this TLV is part of the compound UCD_settings TLV (11.18.1), the PHY Mode ID (11.18.2) applies to the DL only

Table 571—UCD PHY-specific channel encodings—WirelessMAN-OFDMA *(continued)*

Name	Type (1 byte)	Length	Value
Fast Feedback Region	210	5	Bits 0–31, Contains same fields as in the FAST FEEDBACK Allocation IE in Table 390: Bits 0–2: *Reserved* Bits 3–9: num subchannels Bits 10–16: num OFDMA symbols Bits 17–23: subchannel offset Bits 24–31: OFDMA symbol offset Bits 32–34, Parameter d that defines periodicity of 2^d frames Bits 35–39, Allocation phase expressed in frames, 0 ≤ Allocation Phase < periodicity (=2^d) NOTE—Up to two TLVs may be used for FDD/H-FDD, to indicate two fast feedback regions in two groups.
HARQ Ack Region	211	4	Bits 0–3: num subchannels Bits 4–8: No. OFDMA symbols Bits 9–15: Subchannel offset Bits 16–23: OFDMA Symbol offset Bits 24–26, Parameter d that defines periodicity of 2^d frames Bits 27–31, Allocation phase expressed in frames, 0 ≤ Allocation Phase < periodicity (=2^d) NOTE—Up to two TLVs may be used for FDD/H-FDD, see 8.4.5.4.23.
Ranging Region	212	5/10/15/20	The value of TLV consists of up to four concatenated sections (one section per Ranging method), each having the following structure: Bit 0: dedicated ranging indicator Bits 1–2: ranging method Bits 3–9: num subchannels Bits 10–16: num OFDMA symbols Bits 17–23: subchannel offset Bits 24–31: OFDMA symbol offset Bits 32–34, Parameter d that defines periodicity of 2^d frames Bits 35–39, Allocation phase expressed in frames, 0 ≤ Allocation Phase < periodicity (=2^d)
Sounding Region	213	5/10	For 5 bytes per each sounding region Bit 0: reserved Bits 1–2: PAPR Reduction/Safety zone Bits 3–9: num subchannels Bits 10–16: num OFDMA symbols Bits 17–23: subchannel offset Bits 24–31: OFDMA symbol offset Bits 32–34, Parameter d that defines periodicity of 2^d frames Bits 35–39, Allocation phase expressed in frames, 0 ≤ Allocation Phase < periodicity (=2^d)
MS Transmit Power Limitation Level	214	1	Unsigned 8-bit integer. Specifies the maximum allowed MS transmit power. Values indicate power levels in 1 dB steps starting from 0 dBm.
H-FDD Group Switch Delay	215	1	The delay (in frames) of H-FDD Group Switching transition; in accordance with 8.4.4.2.1. If this parameter is not present, H-FDD Group Switching Delay shall default to H-ARQ ACK Delay. For H-FDD, either H-FDD Group Switch Delay or H-ARQ ACK Delay shall be present in the UCD.

Table 571—UCD PHY-specific channel encodings—WirelessMAN-OFDMA *(continued)*

Name	Type (1 byte)	Length	Value
Frame offset	216	1	Bits 0–3: Frame_offset_CQICH: The offset between the frame of the corresponding CQI channel and the current frame. 0x0 shall not be used. (See 8.4.5.4.27.) Bits 4–7: Frame_offset_Data: The offset between the frame of the corresponding UL burst and the current frame. 0x0 shall not be used. (See 8.4.5.4.27.)
No. PC command bits (B)	217	1	Bits 0–1: Bq (see 8.4.5.4.27) 0b00: 1 bits ‘0’:–0.5 dB, ‘1’:+0.5 dB; 0b01: 2 bits ‘00’:–0.5 dB, ‘01’: 0 dB, ‘10’:+0.5dB, ‘11’:+1.0 dB 0b10: 3 bits ‘000’:–1.5 dB ~ ‘111’:+2.0dB, step size=0.5 dB 0b11: 4 bits ‘0000’:–3.5 dB ~’1111’:+4.0dB, step size=0.5 dB Bits 2–3: Bd (see 8.4.5.4.27) 0b00: 1 bits, ‘0’:–0.5 dB, ‘1’:+0.5 dB; 0b01: 2 bits, ‘00’:–0.5 dB, ‘01’: 0 dB, ‘10’:+0.5 dB, ‘11’:+1.0 dB 0b10: 3 bits, ‘000’:–1.5 dB ~ ‘111’:+2.0 dB, step size=0.5 dB 0b11: 4 bits, ‘0000’:–3.5dB ~’1111’:+4.0 dB, step size=0.5 dB Bits 4–7: *Reserved*
Country Code	218	2	Country code according to List of Mobile Country or Geographical Area Codes—numerical order [ITU-T RECOMMENDATION E.212, Annex 897-1.XII.2007] Bits 0–3: 1st digit (from left to right) of the country code Bits 4–7: 2nd digit of the country code Bits 8–11: 3rd digit of the country code Bits 12–15: *Reserved*

[a]The total number of codes shall be equal or less than 256.

11.3.1.1 Uplink burst profile encodings

The uplink burst profile encodings unique to each PHY specification are provided in Table 572, Table 573, Table 574, and Table 575.

Table 572—UCD burst profile encodings—WirelessMAN-SC

Name	Type (1 byte)	Length	Value (variable length)
Modulation type	150	1	1=QPSK, 2=16-QAM, 3=64-QAM
Preamble length	151	1	The number of symbols in the preamble pattern. The preamble consumes the first *n* PS of the intervals allocated in the UL-MAP. In other words, UL-MAP entries include the bandwidth for a burst's preamble.
FEC Code Type	152	1	1 = Reed–Solomon only 2 = Reed–Solomon + Inner (24,16) Block Convolutional Code (BCC) 3 = Reed–Solomon + Inner (9,8) Parity Check Code 4 = BTC (Optional) 5–255 = *Reserved*
RS information bytes (K)	153	1	K = 6–255
RS parity bytes (R)	154	1	R = 0–32 (error correction capability T = 0–16)
BCC code type	155	1	1 = (24,16) 2–255 = *Reserved*
BTC row code type	156	1	1 = (64,57) Extended Hamming 2 = (32,26) Extended Hamming 3–255 = *Reserved*.
BTC column code type	157	1	1 = (64,57) Extended Hamming 2 = (32,26) Extended Hamming 3–255 = *Reserved*
BTC interleaving type	158	1	1 = No interleaver, 2 = Block Interleaving, 3–255 = *Reserved*.
Randomizer seed	159	2	The 15 bit seed value left-justified in the 2 byte field. Bit 15 is the MSB of the first byte, and the LSB of the second byte is not used.
Last codeword length	160	1	1 = fixed; 2 = shortened

Table 573—UCD burst profile encodings—WirelessMAN-OFDM

Name	Type (1 byte)	Length	Value (variable length)
FEC Code type and modulation type	150	1	0 = BPSK (CC) 1/2 1 = QPSK (RS+CC/CC) 1/2 2 = QPSK (RS+CC/CC) 3/4 3 = 16-QAM (RS+CC/CC) 1/2 4 = 16-QAM (RS+CC/CC) 3/4 5 = 64-QAM (RS+CC/CC) 2/3 6 = 64-QAM (RS+CC/CC) 3/4 7 = QPSK (BTC) 1/2 8 = QPSK (BTC) 3/4 9 = 16-QAM (BTC) 3/5 10 = 16-QAM (BTC) 4/5 11 = 64-QAM (BTC) 2/3 12 = 64-QAM (BTC) 5/6 13 = QPSK (CTC) 1/2 14 = QPSK (CTC) 2/3 15 = QPSK (CTC) 3/4 16 = 16-QAM (CTC) 1/2 17 = 16-QAM (CTC) 3/4 18 = 64-QAM (CTC) 2/3 19 = 64-QAM (CTC) 3/4 20–255 = *Reserved*
Focused contention power boost	151	1	The power boost in dB of focused contention carriers, as described in 8.3.7.3.3.
TCS_enable	152	1	0 = TCS disabled 1 = TCS enabled 2–255 = *Reserved*

Table 574—UCD burst profile encodings—WirelessMAN-OFDMA

Name	Type (1 byte)	Length	Value (variable length)
FEC Code type and modulation type	150	1	0 = QPSK (CC) 1/2 1 = QPSK (CC) 3/4 2 = 16-QAM (CC) 1/2 3 = 16-QAM (CC) 3/4 4 = 64-QAM (CC) 1/2 5 = 64-QAM (CC) 2/3 6 = 64-QAM (CC) 3/4 7 = QPSK (BTC) 1/2 8 = QPSK (BTC) 3/4 9 = 16-QAM (BTC) 3/5 10 = 16-QAM (BTC) 4/5 11 = 64-QAM (BTC) 5/8 12 = 64-QAM (BTC) 4/5 13 = QPSK (CTC) 1/2 14 = *Reserved* 15 = QPSK (CTC) 3/4 16 = 16-QAM (CTC) 1/2 17 = 16-QAM (CTC) 3/4 18 = 64-QAM (CTC) 1/2 19 = 64-QAM (CTC) 2/3 20 = 64-QAM (CTC) 3/4 21 = 64-QAM (CTC) 5/6 22 = QPSK (ZT CC) 1/2 23 = QPSK (ZT CC) 3/4 24= 16-QAM (ZT CC) 1/2 25= 16-QAM (ZT CC) 3/4 26= 64-QAM (ZT CC) 1/2 27= 64-QAM (ZT CC) 2/3 28= 64-QAM (ZT CC) 3/4 29 = QPSK (LDPC) 1/2 30= QPSK (LDPC) 2/3 A code 31= QPSK (LDPC) 3/4 A code 32 = 16-QAM (LDPC) 1/2 33 = 16-QAM (LDPC) 2/3 A code 34 = 16-QAM (LDPC) 3/4 A code 35 = 64-QAM (LDPC) 1/2 36 = 64-QAM (LDPC) 2/3 A code 37 = 64-QAM (LDPC) 3/4 A code 38 = QPSK (LDPC) 2/3 B code 39 = QPSK (LDPC) 3/4 B code 40= 16-QAM (LDPC) 2/3 B code 41 = 16-QAM (LDPC) 3/4 B code 42 = 64-QAM (LDPC) 2/3 B code 43 = 64-QAM (LDPC) 3/4 B code 44 = QPSK (CC with optional interleaver) 1/2 45 = QPSK (CC with optional interleaver) 3/4 46 = 16-QAM (CC with optional interleaver) 1/2 47 = 16-QAM (CC with optional interleaver) 3/4 48 = 64-QAM (CC with optional interleaver) 2/3 49= 64-QAM (CC with optional interleaver) 3/4 50 = QPSK (LDPC) 5/6 51 = 16-QAM(LDPC) 5/6 52 = 64-QAM(LDPC) 5/6 53..255 = *Reserved*
Ranging data ratio	151	1	Reducing factor in units of 1 dB, between the power used for this burst and power should be used for CDMA ranging. It shall be encoded as signed integer.
Group Switch Completion Time	152	1	The number of frames after which the MS is expected to go to Group 1 following failed attempts to execute the group switch instruction in accordance with 8.4.4.2. The reference point is the frame in which the first map is expected to be received in the new group in accordance to Figure 227.

11.4 DCD management message encodings

The DCD message encodings are specific to the DCD message (see 6.3.2.3.1).

11.4.1 DCD channel encodings

The DCD Channel Encodings are provided in Table 575.

For FDD/H-FDD operation, if two TLVs for a particular type occur in the DCD, the first TLV corresponds to H-FDD group 1, while the second TLV corresponds to H-FDD group 2.

Table 575—DCD channel encodings

Name	Type (1 byte)	Length	Value (variable length)	PHY scope
Downlink_Burst_ Profile	1	—	May appear more than once (see 6.3.2.3.1). The length is the number of bytes in the overall object, including embedded TLV items.	All
BS EIRP	2	2	Signed in units of 1 dBm.	All
Frame duration	3	4	The number of PSs contained in a Burst FDD or TDD frame. Required only for framed DLs.	SC
PHY Type	4	1	The PHY Type to be used.	SC
Power adjustment rule	5	1	0=Preserve Peak Power 1=Preserve Mean Power Describes the power adjustment rule when performing a transition from one burst profile to another.	SC
Channel Nr	6	1	DL channel number as defined in 8.5. Used for license-exempt operation only.	OFDM, OFDMA
TTG	7	2 for TDD, 4 for H-FDD	TTG (in PSs). Note: for H-FDD, the first set of 2 bytes corresponds to H-FDD Group 1, while the second set of 2 bytes corresponds to H-FDD Group 2	OFDMA
RTG	8	1 for TDD, 2 for H-FDD	RTG (in PSs). Note: for H-FDD, the first byte corresponds to H-FDD Group 1, while the second byte corresponds to H-FDD Group 2.	OFDMA
$EIRxP_{\mathrm{IR,max}}$	9	2	Initial ranging maximum equivalent isotropic received power at BS. Signed in units of 1 dBm.	All
Channel Switch Frame Number	10	3	Channel switch frame number as defined in 6.3.15.7, Used for license-exempt operation only.	OFDM, OFDMA
Frequency	12	4	DL center frequency (kHz).	All
BSID	13	6	Base station identifier. If Compressed DL-MAP is used, then this TLV shall be present in the DCD message.	OFDM, OFDMA
Frame Duration Code	14	1	The duration of the frame. The frame duration code values are specified in Table 270.	OFDM
Frame Number	15	3	The number of the frame containing the DCD message or the number of the frame of the last fragment of the DCD message if the DCD is fragmented.	OFDM
HARQ ACK delay for UL burst	17	1	1 = 1 frame offset 2 = 2 frame offset 3 = 3 frame offset	OFDMA

Table 575—DCD channel encodings *(continued)*

Name	Type (1 byte)	Length	Value (variable length)	PHY scope
Permutation type for broadcast region in HARQ zone	19	1	0 = PUSC 1 = FUSC 2 = Optional FUSC 3 = AMC	OFDMA
Maximum retrans-mission	20	1	Maximum number of retransmission in DL HARQ. Default value shall be 4 retransmissions.	OFDMA
Default RSSI and CINR averaging parameter	21	1	Bits 0–3: Default averaging parameter α_{avg} for physi-cal CINR measurements, in multiples of 1/16 (range [1/16, 16/16], 0x0 for 1/16, 0xF for 16/16). Bits 4–7: Default averaging parameter α_{avg} for RSSI measurements, in multiples of 1/16 (range [1/16, 16/16], 0x0 for 1/16, 0xF for 16/16). Default value shall be 0x3.	OFDMA
DL AMC allocated physical bands bitmap	22	6	A bitmap describing the physical bands allocated to the segment in the DL when allocating AMC sub-channels through the HARQ MAP, or through the normal MAP, or for band AMC CINR reports, or using the optional AMC permutation (see 8.4.6.3). The LSB of the least significant byte shall correspond to the physical band 0. For any bit that is not set, the corresponding physical band shall not be used by the SS on that segment. When this TLV is not present, BS may allocate any physical bands to an SS.	OFDMA
Available DL Radio Resources	23	1	Indicates the average ratio of non-assigned DL radio resources to the total usable DL radio resources. The average ratio shall be calculated over a time interval defined by the DL_radio_resources_window_size parameter (Table 554). The reported average ratio will serve as a relative load indicator. This value can be biased by the operator provided it reflects a consis-tent representation of the average loading condition of BSs across the operator network. 0x00 : 0% 0x01 : 1% ... 0x64 : 100% 0x65–0xFE : reserved, 0xFF indicates no information available	All
FDD DL gap	24	1	Bit 0(LSB): Indicates the location of the residual frame time (DL_residue) “0” – before DL Subframe 2 “1” – after DL Subframe 2 Bits 1–2: number of symbols, 0, 1, 2, 3, in DL_gap (See 8.4.4.2) Bits 3–7: reserved, set to 0	OFDMA
FDD frame partition change timer (M)	26	1	Number of frames (see 6.3.2.3.4 and 8.4.5.6.1)	OFDMA

Table 575—DCD channel encodings *(continued)*

Name	Type (1 byte)	Length	Value (variable length)	PHY scope
H_Add Threshold	31	1	Threshold used by the MS to add a neighbor BS to the diversity set. When the CINR of a neighbor BS is higher than H_Add, the MS should send MOB_MSHO-REQ to request adding this neighbor BS to the diversity set. This threshold is used for the MS that is perform MDHO/FBSS HO. It is in the unit of decibels. If the BS does not support FBSS HO/ MDHO, this value is not set.	OFDMA
H_Delete Threshold	32	1	Threshold used by the MS to drop a BS from the diversity set. When the CINR of a BS is lower than H_Delete, the MS should send MOB_MSHO-REQ to request dropping this BS from the diversity set. This threshold is used for the MS that is performing MDHO/FBSS HO. It is in the unit of decibels. If the BS does not support FBSS HO/MDHO, this value is not set.	OFDMA
ASR Slot Length (*M*) and Switching Period (*L*)	33	1	Bits 0–3: *M*, in units of frames. (0b0000=1 frame, ..., 0b1111=16 frames) Bits 4–7: *L*, in units of ASR slots. (0b0000=1 ASR slot,..., 0b1111=16 ASR slots)	OFDMA

DL region definition	34	*variable*	Num_ region (6 bits for the number of regions, 2 bits reserved)
			For (*i* = 0; *i* < Num_ region; *i*++){
			OFDMA symbol offset (8 bits)
			Subchannel offset (6 bits)
			No. OFDMA symbols (8 bits)
			No. subchannels (6 bits)
			}
			Padding bits to align boundary of byte.
				OFDMA

Paging Group ID	35	Length is defined as: (Num of Paging Group ID) × 2	One or more logical affiliation grouping of BS (see 6.3.2.3.51) List of Paging Group IDs with which the BS is logically affiliated. Starting from the first byte, every 2 bytes contains one Paging Group ID value. The Paging Group identifier shall not be ‘0’. When the Paging Group ID TLV is part of a compound DCD_settings TLV (refer to 11.18.1), a value of 0 means that the neighbor BS is not affiliated with any paging group.	OFDMA
TUSC1 permutation active subchannels bitmap	36	9	This is a bitmap describing the subchannels allocated to the segment in the DL, when using the TUSC1 permutation (see 8.4.6.1.2.4). The LSB of the least significant byte shall correspond to subchannel 0. For any bit that is not set, the MS on that segment shall not use the corresponding subchannel. The active subchannels are renumbered consecutively starting from 0.	OFDMA

Table 575—DCD channel encodings *(continued)*

Name	Type (1 byte)	Length	Value (variable length)	PHY scope
TUSC2 permutation active subchannels bitmap	37	13	This is a bitmap describing the subchannels allocated to the segment in the DL, when using the TUSC2 permutation (see 8.4.6.1.2.5). The LSB of the least significant byte shall correspond to subchannel 0. For any bit that is not set, the MS on that segment shall not use the corresponding subchannel. The active subchannels are renumbered consecutively starting from 0.	OFDMA
HO type support	50	1	Bit 0: HO Bit 1: MDHO Bit 2: FBSS HO Bit 3: BS_Controlled_HO; This bit can be set to one only if Bit 0 is also set to one. Bit 4–7: *Reserved*	OFDMA
Hysteresis margin	51	1	Hysteresis margin is used by the MS to include a neighbor BS to a list of possible target BSs. When the CINR of a neighbor BS is larger than the sum of the CINR of the current serving BS and the hysteresis margin for the time-to-trigger duration, then the neighbor BS is included in the list of possible target BSs in MOB_MSHO-REQ. It is the unit of dB and applicable for only HO.	All
Time-to-Trigger duration	52	1	Time-to-trigger duration is the time, measured in number of frames, used by the MS to decide to select a neighbor BS as a possible target BS. It is applicable only for HO.	All
Trigger	54	*variable*	The Trigger is a compound TLV value that indicates trigger metrics. The trigger in this encoding is defined for serving BS or commonly applied to neighbor BSs.	OFDMA
MIH Capability Support	55	1	Indicates the IEEE 802.21 Media Independent Handover Services capability of the BS. Each bit set to 1 indicates that the corresponding service is supported. - If bit 0 is set to 1, the MS is permitted to send MOB_MIH-MSG messages (see 6.3.2.3.57) as further indicated through bits 1–3. If bit 0 is set to 0, bits 1–3 shall be set to 0. - If bit 4 is set to be 1, the MS is allowed to transmit an MIH information service request in an MIH Initial Service Request message (see 6.3.2.3.9). - When bit 5 is set to be 1, the MS is allowed to transmit an MIH request for ES/CS Capability discovery in an MIH Initial Service Request message (see 6.3.2.3.9). Bit 0 = MIH (Media Independent Handover) support Bit 1 = Event Service support Bit 2 = Command Service support Bit 3 = Information Service support Bit 4 = Information Service support during network entry Bit 5 = ES/CS capability discovery support during network entry Bit 6–7: reserved	All

Table 575—DCD channel encodings *(continued)*

Name	Type (1 byte)	Length	Value (variable length)	PHY scope
NSP Change Count TLV	56	1	The value of NSP Change Count is programmable. NSP Change Count is an incrementing value. A change in NSP Change Count signals to an SS that NSP List and/or Verbose NSP Name List has changed. Inclusion of the NSP Change Count is only required if the base station transmits NSP List TLV in any SBC-RSP or SII-ADV message.	All
Cell Type TLV	57	1	Cell type TLV may be used by the MS in the network for cell selection and reselection. Cell Type is encoded as follows: Bits 0–3: Indicates class of BS a) if bits 0–3= 0000, it is a class-0 BS b) if bits 0–3= 0001, it is a class-1 BS c) if bits 0–3= 0010, it is a class-2 BS d) if bits 0–3= 0011, it is a class-3 BS e) if bits 0–3= 0100, it is a class-4 BS f) if bits 0–3= 0101, it is a class-5 BS g) if bits 0–3= 0110, it is a class-6 BS h) if bits 0–3= 0111, it is a class-7 BS i) if bits 0–3= 1000, it is a class-8 BS j) if bits 0–3= 1001, it is a class-9 BS k) if bits 0–3= 1010, it is a class-10 BS l) if bits 0–3= 1011, it is a class-11BS m) if bits 0–3= 1100, it is a class-12 BS n) if bits 0–3= 1101, it is a class-13BS o) if bits 0–3= 1110, it is a class-14 BS p) if bits 0–3= 1111, it is a class-15 BS The definition of these classes are out of scope of the specification Bits 4–7 of the cell Type are reserved.	All
$N + I$	60	1	The operator will define the $N + I$ (Noise + Interference) based on the related RF system design calculations.	OFDM
MBS zone identifier list	61	*variable*	This parameter shall include all MBS zone identifiers (i.e., $n \times$ MBS zone identifier) with which BS is associated. An MBS zone identifier is 1 byte long. bits 6 through 0 are the MBS Zone Identifier, bit 7 is set to 0 in each byte. The MBS Zone identifier shall not be ‘0’. When the parameter is part of a compound DCD_settings TLV (refer to 11.18.1), a value of 0 means that the neighbor BS is not affiliated with any MBS zone	All

Table 575—DCD channel encodings *(continued)*

Name	Type (1 byte)	Length	Value (variable length)	PHY scope
DL Coordinated Zone Indication	62	1	Bit 0: the coordinated first DL PUSC zone indication if set to 1, indicates the first DL PUSC zone is a coordinated zone. If set to 0, indicates the first DL PUSC zone is not a coordinated zone. Bit 1: the coordinated second DL zone indication, if set to 1, indicates the second DL zone is a coordinated zone. If set to 0, indicates the second DL zone does not exist or is not a coordinated zone. Bit 2: the coordinated third DL zone indication, if set to 1, indicates the third DL zone is a coordinated zone. If set to 0, indicates the third DL zone does not exist or is not a coordinated zone. Bit 3: the coordinated fourth DL zone indication, if set to 1, indicates the fourth DL zone is a coordinated zone. If set to 0, indicates the fourth DL zone does not exist or is not a coordinated zone. Bit 4: the coordinated fifth DL zone indication, if set to 1, indicates the fifth DL zone is a coordinated zone. If set to 0, indicates the fifth DL zone does not exist or is not a coordinated zone; Bit 5 to 7: *Reserved*	OFDMA
Emergency Service	63	*variable*	The Emergency Service is a compound TLV that defines the parameters required for Emergency Service (see Table 578)	All

Table 575—DCD channel encodings *(continued)*

Name	Type (1 byte)	Length	Value (variable length)	PHY scope
Default HO RSSI and CINR averaging parameter	121	2	Bit 0–3: Intra-FA HO Alpha averaging parameter for physical CINR measurements as follows: 0x0: 1 0x1: 1/2 0x2: 1/4 0x3: 1/8 0x4: 1/16 0x5: 1/32 0x6: 1/64 0x7: 1/128 0x8: 1/256 0x9: 1/512 0x10-0x15: Reserved Default value shall be 0x5 Bit 4–7: Intra-FA HO Alpha averaging parameter for physical RSSI measurements as follows: 0x0: 1 0x1: 1/2 0x2: 1/4 0x3: 1/8 0x4: 1/16 0x5: 1/32 0x6: 1/64 0x7: 1/128 0x8: 1/256 0x9: 1/512 0x10-0x15: *Reserved* Default value shall be 0x5 Bit 8–11: Inter-FA HO Alpha averaging parameter for physical CINR measurements as follows: 0x0: 1 0x1: 1/2 0x2: 1/4 0x3: 1/8 0x4: 1/16 0x5: 1/32 0x6: 1/64 0x7: 1/128 0x8: 1/256 0x9: 1/512 0x10–0x15: *Reserved* Default value shall be 0x2 Bit 12–15: Inter-FA HO Alpha averaging parameter for physical RSSI measurements as follows: 0x0: 1 0x1: 1/2 0x2: 1/4 0x3: 1/8 0x4: 1/16 0x5: 1/32 0x6: 1/64 0x7: 1/128 0x8: 1/256 0x9: 1/512 0x10–0x15: *Reserved* Default value shall be 0x2	OFDMA
MAC version	148	1	See 11.1.3.	All

Table 575—DCD channel encodings *(continued)*

Name	Type (1 byte)	Length	Value (variable length)	PHY scope
Downlink_burst_ profile for multiple FEC types	153	1	May appear more than once (see 6.3.2.3.1 and 8.4.5.5). The length is the number of bytes in the overall object, including embedded TLV items.	OFDMA
BS Restart Count	154	1	The value is incremented by one whenever BS restarts (see 6.3.9.11). The value rolls over from 0 to 255.	All
Connection identi-fier descriptor	155	2	Most significant 11 bits = *m* (see Table 558) Least significant 5 bits = *a* (number of reserved trans-port CIDs per MS)	OFDMA
CDD SISO/SIMO descriptor	156	*variable*	This TLV may be transmitted to specify CDD param-eters to the MS. It applies to the first PUSC zone, as well as zones with STC = 0b00 (1 logical antenna) and dedicated pilots = 0 in STC DL zone IE. Each byte represents one CDD parameter: 5 LSBs are for delay in samples (1 to 32) from physical antenna #0, 3 MSBs are reserved and shall be set to 0s. If the Length of this CDD descriptor is *n* bytes, then the number of Tx antenna is *n*+1. The power of each antenna is the same.	OFDMA
CDD STC descriptor	157	*variable*	This TLV may be transmitted to specify CDD param-eters to the MS. It applies to zones with STC = 0b01 and 2/3 antennas select = 0b00 (STC using 2 anten-nas), i.e., 2 logical antennas, and dedicated pilots = 0 in STC DL zone IE. Each byte represents one CDD parameter: 5 LSBs are for delay in samples (1 to 32) from physical antenna #0, 3 MSBs are reserved and shall be set to 0s. The same parameters shall apply to logical antenna 0 and 1. If the Length of this CDD descriptor is *n* bytes, then the number of Tx antenna is 2(*n*+1). The power of each antenna is the same.	OFDMA

The trigger TLV (type 54) in Table 575 is encoded using the description in Table 576.

Table 576—Trigger TLV description

Name	Type	Length (1 byte)	Value
Type/Function/Action	54.1	1	See Table 577 for description
Trigger value	54.2	1	Trigger value is the value used in comparing measured metric for determining a trigger condition
Trigger averaging duration	54.3	1	Trigger averaging duration is the time measured in number of frames over which the metric measurements are averaged.

The Type/function/action byte field of the trigger description in Table 576 is described in Table 577.

Table 577—Trigger; Type/function/action description

Name	Length (bit)	Value
Type	2 (MSB)	Trigger metric type: 0x0: CINR metric 0x1: RSSI metric 0x2: RTD metric 0x3: *Reserved*
Function	3	Computation defining trigger condition: 0x0: *Reserved* 0x1: Metric of neighbor BS is greater than absolute value 0x2: Metric of neighbor BS is less than absolute value 0x3: Metric of neighbor BS is greater than serving BS metric by relative value 0x4: Metric of neighbor BS is less than serving BS metric by relative value 0x5: Metric of serving BS greater than absolute value 0x6: Metric of serving BS less than absolute value 0x7: *Reserved* NOTE 1—0x1–0x4 not applicable for RTD trigger metric NOTE 2—When type 0x1 is used together with function 0x3 or 0x4, the threshold value shall range from –32 dB (0x80) to +31.75 dB (0x7F). When type 0x1 is used together with function 0x1, 0x2, 0x5 or 0x6, the threshold value shall be interpreted as an unsigned byte with units of 0.25 dB, such that 0x00 is interpreted as –103.75 dBm and 0xFF is interpreted as –40 dBm
Action	3 (LSB)	Action performed upon reaching trigger condition: 0x0: *Reserved* 0x1: Respond on trigger with MOB_SCN-REP after the end of each scanning interval 0x2: Respond on trigger with MOB_MSHO-REQ 0x3: MS shall start neighbor BS scanning process by sending MOB_SCN-REQ, by initiating Autonomous neighbor cell scanning (see 8.4.14.1.3) or both. 0x4–0x7: *Reserved* NOTE—0x3 is not applicable when neighbor BS metrics are defined (i.e., only Function values 0x5 or 0x6 are applicable).

If Trigger TLVs are included in the DCD message, the MS may ignore Trigger TLVs having a metric that the MS and BS have not agreed to support during SBC-REQ/RSP message exchange.

When the average value of the MS's measurements over the averaging interval of a trigger defined by a Trigger TLV meets the trigger condition as specified by the type, function, and value of the trigger, the MS shall invoke the trigger's specified action. For the metrics CINR and RSSI, the average values are computed using the formulae defined in 8.4.12. Whenever the trigger condition of a trigger is met, the MS shall invoke the action of the trigger. If more than one trigger conditions are met simultaneously the MS shall invoke the action of at least one of the triggers.

Triggers specified in this TLV may be overridden by triggers specified in the Neighbor BS Trigger TLV (see 6.3.2.3.42, Table 145).

The set of triggers defined by the Trigger TLVs in the DCD_settings compound TLV for a given neighbor BS shall be identical to the complete set of triggers in the DCD message of that BS. When this TLV does not occur in the DCD_settings compound TLV for a given neighbor BS, the set of Trigger TLVs in the neighbor BS's DCD message shall be identical to the set of Trigger TLVs in the current BS.

The CINR, RSSI, and RTD metric fields are encoded according to the descriptions found within 6.3.2.3.45 for the MOB_SCN-REP message and 6.3.2.3.48 for the MOB_MSHO-REQ message.

The RTD trigger shall be measured only on the serving BS rather than relative to or from neighbor BSs. The trigger functions 0x5 and 0x6 shall be the only applicable ones for the RTD trigger. When the type is set to RTD metric (i.e., 0x2), only either of the trigger functions 0x5 or 0x6 shall be applicable.

The MS may transmit MOB_MSHO-REQ and MOB_SCN-REQ messages autonomously, i.e., in addition to messages prompted by trigger conditions.

Table 578—Emergency service description

Name	Type (1 byte)	Length	Value (variable length)
CIDs for Emergency Service	63.1	Length is defined as: (Number of Multicast CIDS) × 2	One or more Multicast CIDs (see Table 558) used for DL Emergency Services. Emergency Service message shall be transmitted on these connections
CS type for Emergency Service	63.2	1	This TLV indicates CS type which is used for Emergency Service. If this field is omitted, MS shall regard the CS type as default CS type. 0. GPCS 1. Packet, IPv4 (default) 2. Packet, IPv6 3. Packet, IEEE802.3/Ethernet 4. Packet, IPv4 over IEEE 802.3/Ethernet 5. Packet, IPv6 over IEEE 802.3/Ethernet 6. ATM 7–255: *Reserved*

11.4.2 Downlink burst profile encodings

Downlink burst profile encodings that are unique to each PHY specification are provided in Table 579, Table 580, and Table 581.

Table 579—DCD burst profile encodings—WirelessMAN-SC

Name	Type (1 byte)	Length	Value (variable length)
Modulation Type	150	1	1 = QPSK 2 = 16-QAM 3 = 64-QAM
FEC Code Type	151	1	1 = Reed–Solomon only 2 = Reed–Solomon + Inner Block Convolutional Code (BCC) 3 = Reed–Solomon + Inner (9,8) Parity Check Code 4 = BTC (Optional) 5–255 = *Reserved*
RS information bytes (*K*)	152	1	*K* = 6–255
RS Parity Bytes (*R*)	153	1	*R* = 0–32 (error correction capability *T* = 0–16)
BCC code type	154	1	1 = (24,16) 2–255 = *Reserved*
BTC Row code type	155	1	1 = (64,57) Extended Hamming 2 = (32,26) Extended Hamming 3–255 = *Reserved*
BTC Column code type	156	1	1 = (64,57) Extended Hamming 2 = (32,26) Extended Hamming 3–255 = *Reserved*
BTC Interleaving type	157	1	1 = No interleaver, 2 = Block Interleaving, 3–255 = *Reserved*
Last codeword length	158	1	1=fixed; 2=shortened allowed (optional) This allows for the transmitter to shorten the last codeword, based upon the allowable shortened codewords for the particular code type.
Preamble presence	161	1	0 = burst not preceded with preamble 1 = burst preceded with preamble. If the preamble is present, it consumes the first PSs of the interval.
CID_In_DL_IE	162	1	0 – CID does not appear DL-MAP IE (default) 1 – CID does appear in DL-MAP IE 2..255 – *Reserved*

Table 580—DCD burst profile encodings—WirelessMAN-OFDM

Name	Type (1 byte)	Length	Value (variable length)
FEC Code type	150	1	0 = BPSK (CC) 1/2 1 = QPSK (RS+CC/CC) 1/2 2 = QPSK (RS+CC/CC) 3/4 3 = 16-QAM (RS+CC/CC) 1/2 4 = 16-QAM (RS+CC/CC) 3/4 5 = 64-QAM (RS+CC/CC) 2/3 6 = 64-QAM (RS+CC/CC) 3/4 7 = QPSK (BTC) 1/2 8 = QPSK (BTC) 3/4 or 2/3 9 = 16-QAM (BTC) 3/5 10 = 16-QAM (BTC) 4/5 11 = 64-QAM (BTC) 2/3 12 = 64-QAM (BTC) 5/6 13 = QPSK (CTC) 1/2 14 = QPSK (CTC) 2/3 15 = QPSK (CTC) 3/4 16 = 16-QAM (CTC) 1/2 17 = 16-QAM (CTC) 3/4 18 = 64-QAM (CTC) 2/3 19 = 64-QAM (CTC) 3/4 20–255 = *Reserved*
TCS_enable	153	1	0 = TCS disabled 1 = TCS enabled 2–255 = *Reserved*

Table 581—DCD burst profile encodings—WirelessMAN-OFDMA

Name	Type (1 byte)	Length	Value (variable length)
FEC Code type and modulation type	150	1	0 = QPSK (CC) 1/2 1 = QPSK (CC) 3/4 2 = 16-QAM (CC) 1/2 3 = 16-QAM (CC) 3/4 4 = 64-QAM (CC) 1/2 5 = 64-QAM (CC) 2/3 6 = 64-QAM (CC) 3/4 7 = QPSK (BTC) 1/2 8 = QPSK (BTC) 3/4 or 2/3 9 = 16-QAM (BTC) 3/5 10 = 16-QAM (BTC) 4/5 11 = 64-QAM (BTC) 2/3 or 5/8 12 = 64-QAM (BTC) 5/6 or 4/5 13 = QPSK (CTC) 1/2 14 = *Reserved* 15 = QPSK (CTC) 3/4 16 = 16-QAM (CTC) 1/2 17 = 16-QAM (CTC) 3/4 18 = 64-QAM (CTC) 1/2 19 = 64-QAM (CTC) 2/3 20 = 64-QAM (CTC) 3/4 21 = 64-QAM (CTC) 5/6 22 = QPSK (ZT CC) 1/2 23 = QPSK (ZT CC) 3/4 24= 16-QAM (ZT CC) 1/2 25= 16-QAM (ZT CC) 3/4 26= 64-QAM (ZT CC) 1/2 27= 64-QAM (ZT CC) 2/3 28= 64-QAM (ZT CC) 3/4 29 = QPSK (LDPC) 1/2 30 = QPSK (LDPC) 2/3 A code 31 = QPSK (LDPC) 3/4 A code 32 = 16-QAM (LDPC) 1/2 33 = 16-QAM (LDPC) 2/3 A code 34 = 16-QAM (LDPC) 3/4 A code 35 = 64-QAM (LDPC) 1/2 36 = 64-QAM (LDPC) 2/3 A code 37 = 64-QAM (LDPC) 3/4 A code 38 = QPSK (LDPC) 2/3 B code 39 = QPSK (LDPC) 3/4 B code 40 = 16-QAM (LDPC) 2/3 B code 41 = 16-QAM (LDPC) 3/4 B code 42 = 64-QAM (LDPC) 2/3 B code 43 = 64-QAM (LDPC) 3/4 B code 44 = QPSK (CC with optional interleaver) 1/2 45 = QPSK (CC with optional interleaver) 3/4 46 = 16-QAM (CC with optional interleaver) 1/2 47 = 16-QAM (CC with optional interleaver) 3/4 48 = 64-QAM (CC with optional interleaver) 2/3 49 = 64-QAM (CC with optional interleaver) 3/4 50 = QPSK (LDPC) 5/6 51 = 16-QAM(LDPC) 5/6 52 = 64-QAM(LDPC) 5/6 53...255 = *Reserved*

11.5 RNG-REQ management message encodings

The encodings in Table 582 are specific to the RNG-REQ message (6.3.2.3.5).

Table 582—RNG-REQ message encodings

Name	Type (1 byte)	Length	Value (variable length)	PHY scope
Requested Downlink Burst Profile	1	1	Bits 0–3: DIUC of the DL burst profile requested by the SS for DL traffic. Bits 4–7: 4 LSB of Configuration Change Count value of DCD defining the burst profile associated with DIUC.	All
SS MAC Address	2	6	The MAC address of the SS.	All
Ranging Anomalies	3	1	A parameter indicating a potential error condition detected by the SS during the ranging process. Setting the bit associated with a specific condition indicates that the condition exists at the SS. Bit 0 — SS already at maximum power. Bit 1 — SS already at minimum power. Bit 2 — Sum of commanded timing adjustments is too large.	All
AAS broadcast capability	4	1	0 = SS can receive broadcast messages. 1 = SS cannot receive broadcast messages.	OFDM, OFDMA
Serving BSID	5	6	The unique identifier of the former serving BS.	—
Ranging Purpose Indication	6	1	Bit 0: HO indication (when this bit is set to 1 in combination with other included information elements indicates the MS is currently attempting to HO or network reentry from idle mode to the BS) Bit 1: Location update request (when this bit is set to 1, it indicates MS action of idle mode location update process) Bit 2: Seamless HO indication (when this bit is set to 1 in combination with other included information elements indicates the MS is currently initiating ranging as part of the seamless HO procedure) Bit 3: Ranging Request for Emergency Call Setup (when this bit is set to 1, it indicates MS action of Emergency Call Process) Bit 4: MBS update. When this bit is set to 1, the MS is currently attempting to perform location update due to a need to update service flow management encodings for MBS flows. Bits 5–7: *Reserved*	—
HO ID	7	1	ID assigned by the target BS for use in initial ranging during MS HO to it (see 6.3.21).	—
Power down Indicator	8	1	Presence of item in message indicates the MS is currently attempting to switch power off, regardless of value.	—

Table 582—RNG-REQ message encodings *(continued)*

Name	Type (1 byte)	Length	Value (variable length)	PHY scope
Requested downlink repetition coding level	12	1	This parameter indicates repetition coding level Indication requested by the MS for DL traffic. If this TLV is not present in the RNG-REQ, it shall be assumed that repetition coding is not requested. Bit 0–1: Repetition coding level: 0b00 – No repetition 0b01 – Repetition coding of 2 0b10 – Repetition coding of 4 0b11 – Repetition coding of 6 The BS shall ignore this field if the DIUC requested in the Requested Downlink Burst Profile TLV refers to modulations higher than QPSK. Bits 2–7: *Reserved*	—
CMAC_KEY_COUNT	13	2	CMAC_KEY_COUNT A 16-bit counter used in the generation of the CMAC keys (refer to 7.2.2.2.9.1).	—
Power_Saving_Class_Parameters	21	*variable*	Compound TLV to specify Power Saving Class definition and/or operation.	—
Unified TLV encoding for Power Saving Class Parameters	22	*variable*	MS may use this TLV encoding instead of the Power_Saving_Class_Parameters TLV encoding to specify a Power Saving Class (see Table 580).	—
Paging Cycle Change	23	2	Requested Paging Cycle length expressed in number of frames. An MS in Idle Mode may use this TLV encoding to request a change of the MS's Paging Cycle.	—

The Power_Saving_Class_Parameters Value field is composed from a number of encapsulated TLV fields as specified in Table 583.

Table 583—Power saving class parameters

Name	Type (1 byte)	Length	Value (variable length)
Flags	1	1	Bit 0: Definition: 0 = Definition of Power Saving Class absent 1 = Definition of power saving class present. Bit 1: Operation: 0 = Deactivation of power saving class. 1 = Activation of Power Saving Class. Bit 2: TRF-IND_Required flag for power saving class type I only This bit shall be set to 0 for other types. Bit 3: Stop_CQI_Allocation_Flag 1 = Any CQICH allocations to this MS are cancelled. 0 = CQICH allocations to this MS are still allocated and the MS shall continue to transmit channel quality information on them during its availability intervals. Bits 4–7: *Reserved*
Power_Saving_Class_ID	2	1	Assigned power saving class identifier. Not used for RNG-REQ message.

Table 583—Power saving class parameters

Power_Saving_ Class_Type	3	1	Power saving class type as specified in 6.3.2.3.39.
Start_frame_ number	4	1	Start frame number for first sleep window. Not used for RNG-REQ message.
initial-sleep window	5	1	Initial sleep window.
listening window	6	1	Assigned duration of MS listening interval (measured in frames).
final-sleep window base	7	1	Assigned final value for sleep interval (measured in frames)—base.
final-sleep win-dow exponent	8	1	Assigned final value for sleep interval (measured in frames)—exponent.
SLPID	9	1	A number assigned by the BS whenever an MS is instructed to enter sleep mode.
CID	10	2	Connection identifier to be included into the power saving class. There may be several TLVs of this type in a single compound Power Saving Class Parameters TLV.
Direction	11	1	Direction for management connection, which is added to power saving class.

Table 584—Unified TLV encoding for Power Saving Class Parameters

Syntax	Bits
Operation	1
Definition	1
Power_Saving_ClassID	6
if(Operation == 1){	—
Start Frame Number	7
Stop_CQI_Allocation_Flag	1
}	—
if(Definition){	—
Power Saving Class Type	2
TRF-IND_Required	1
Traffic_Triggered_Wakening_flag	1
Direction	2
MDHO/FBSS_Support	1
Initial-Sleep Window	8
Listening-Window	8
Final Sleep Window base	10
Final Sleep Window exponent	3

Table 584—Unified TLV encoding for Power Saving Class Parameters *(continued)*

Syntax	Bits
if(TRF-IND_Required == 1){	—
SLPID	10
Reserved	2
}	—
Number_of_CIDs	4
for(*i* = 0; *i* < Number_of_CIDs; *i*++){	—
CID	16
}	—
if(MDHO/FBSS_Support == 1){	—
MDHO/FBSS duration(s)	3
Reserved	1
}	—
}	—
Padding for byte alignment	0 or 4

11.6 RNG-RSP management message encodings

CID update encodings (11.7.9) and SAID update encodings (11.7.17) may be used in RNG-RSP for reestablishing connections. When CID update encodings or SAID update encodings are used in RNG-RSP, those will be included in the compound REG-RSP encodings TLV. When the compound SBC-RSP encodings and REG-RSP encodings are included in RNG-RSP for HO optimization, the target BS shall only include TLV fields which values are different from what are used in the serving BS. For the TLV fields that are not included in the compound SBC-RSP and REG-RSP encodings, the MS shall set the values according to what are used in the serving BS. The encodings in Table 585 are specific to the RNG-RSP message (6.3.2.3.6).

Table 585—RNG-RSP message encodings

Name	Type (1 byte)	Length	Value (variable length)	PHY scope
Timing Adjust	1	4	Tx timing offset adjustment (signed 32-bit). The amount of time required to adjust SS transmission so the bursts will arrive at the expected time instance at the BS. Units are PHY-specific (see 10.3). The SS shall advance its burst transmission time if the value is negative and delay its burst transmission if the value is positive.	All

Table 585—RNG-RSP message encodings *(continued)*

Name	Type (1 byte)	Length	Value (variable length)	PHY scope
Power Level Adjust	2	1	Tx Power offset adjustment (signed 8-bit, 0.25 dB units) Specifies the relative change in transmission power level that the SS is to make in order that transmissions arrive at the BS at the desired power. When subchannelization is employed, the subscriber shall interpret the power offset adjustment as a required change to the transmitted power density.	All
Offset Frequency Adjust	3	4	Tx frequency offset adjustment (signed 32-bit, hertz units) Specifies the relative change in transmission frequency that the SS is to make in order to better match the BS. If the value is less than half of the channel bandwidth, this is fine-frequency adjustment within a channel, otherwise, this is reassignment to a different channel. The SS shall increase its Tx frequency if the value is positive and decrease its Tx frequency if the value is negative.	All
Ranging Status	4	1	Used to indicate whether UL messages are received within acceptable limits by BS. 1 = continue, 2 = abort, 3 = success	All
Downlink frequency override	5	4	Center frequency, in kHz, of new DL channel where the SS should redo ranging. If this TLV is used, the Ranging Status value shall be set to 2. Shall be used for licensed bands only.	OFDM OFDMA
Uplink channel ID override	6	1	License-exempt bands: The Channel Nr (see 8.5.1) where the SS should redo initial ranging.	All
Downlink Operational Burst Profile	7	2	This parameter is sent in response to the RNG-REQ Requested Downlink Burst Profile parameter. Bit 0–7: Specifies the least robust DIUC that may be used by the BS for transmissions to the SS. Bit 8–15: Configuration Change Count value of DCD defining the burst profile associated with DIUC.	All
SS MAC Address	8	6	SS MAC Address in MAC-48 format.	All
Basic CID	9	2	Basic CID assigned by BS at initial access.	All
Primary Management CID	10	2	Primary Management CID assigned by BS at initial access.	All
AAS broadcast permission	11	1	0 = SS may issue contention-based BR permission. 1 = SS shall not issue contention-based BR.	OFDM OFDMA

Table 585—RNG-RSP message encodings *(continued)*

Name	Type (1 byte)	Length	Value (variable length)	PHY scope
Frame number	12	3	Frame number where the associated RNG-REQ message was detected by the BS. Usage is mutually exclusive with SS MAC Address (Type 8). The opportunity within the frame is assumed to be 1 (the first) if the Initial Ranging Opportunity field is not supplied.	OFDM
Initial ranging opportunity number	13	1	Initial ranging opportunity (1–255) in which the associated RNG-REQ message was detected by the BS. Usage is mutually exclusive with SS MAC Address (Type 8).	OFDM
Service Level Prediction	17	1	Indicates the level of service the MS can expect from this BS: 0 = No service possible for this MS. 1 = Some service is available for one or several service flows authorized for the MS. 2 = For each authorized service flow, a MAC connection can be established with QoS specified by the AuthorizedQoSParamSet. 3 = No service level prediction available.	All
Resource Retain Flag	20	1	Indicates whether the former serving BS retains the connection information of the MS: 0 = Connection information for the MS is deleted. 1 = Connection information for the MS is retained.	All

Table 585—RNG-RSP message encodings *(continued)*

Name	Type (1 byte)	Length	Value (variable length)	PHY scope
HO Process Optimization	21	2	For each Bit location, a value of '0' indicates the associated re-entry management messages shall be required, a value of '1' indicates the re-entry management message should be omitted. Bit 0: Omit SBC-REQ management messages during current re-entry processing (Bit 1, Bit 2) = (0,0): Perform re-authentication and SA-TEK 3-way handshake. BS shall not include SA-TEK-Update TLV in the SA-TEK-Response message. In addition, the RNG-RSP message does not include SA-TEK-Update TLV. (Bit 1, Bit 2) = (0,1): Reserved. (Bit 1, Bit 2) = (1,0): SA-TEK-Update TLV is included in the RNG-RSP message. In this case, SA-TEK 3-way handshake is avoided. (Bit 1, Bit 2) = (1, 1): Re-authentication and SA-TEK 3-way handshake is not performed. The RNG-RSP message does not include SA-TEK-Update TLV. All the TEKs received from the serving BS are reused. Bit 3: Omit Network Address Acquisition management messages during current reentry processing Bit 4: Omit Time of Day Acquisition management messages during current reentry processing Bit 5: Omit TFTP management messages during current re-entry processing Bit 6: If Bit 6 = 1, Full service and operational state transfer or sharing between Serving BS and Target BS (All static and dynamic context, e.g., ARQ windows, timers counters state machines) Bit 7: Omit REG-REQ management message during current re-entry processing Bit 8: If Bit 8 = 0, BS shall send an unsolicited SBC-RSP management message Bit 9: If Bit 9 = 1, post-HO re-entry MS DL data pending at target BS Bit 10: If Bit 10 = 0, BS shall send an unsolicited REG-RSP management message Bit 11: (Target) BS supports virtual SDU SN. If Bit 11=1 and MS supports SDU SN, it shall issue SN_REPORT upon completion of HO to this BS. Bit 12: If Bit 12 = 1, MS shall send a notification of MS's successful re-entry registration. Bit 13: If this bit is set to 1, MS shall trigger a higher layer protocol required to refresh its traffic IP address (e.g., DHCP Discover [IETF RFC 2131] or Mobile IPv4 re-registration [IETF RFC 3344]). Bits 14–15: *Reserved*	All
HO ID	22	1	Identifier assigned by the Target BS for use in initial ranging during MS HO to it (see 6.3.20.5).	All
Location Update Response	23	1	0x00= Success of Location Update 0x01= Failure of Location Update 0x02 = *Reserved* 0x03=Success of location update and DL traffic pending 0x04–0xFF: *Reserved*	All

Table 585—RNG-RSP message encodings *(continued)*

Name	Type (1 byte)	Length	Value (variable length)	PHY scope
Power_Saving_Class_ Parameters	27	*variable*	Compound TLV to specify power saving class definition and/or operation.	All
Unified TLV encoding for Power Saving Class Parameters	28	*variable*	BS may use this TLV encoding instead of the Power_Saving_Class_Parameters TLV encoding to specify a Power Saving Class (see Table 580).	
SBC-RSP encodings	29	*variable*	SBC-RSP TLV items for HO optimization.	All
REG-RSP encodings	30	*variable*	REG-RSP TLV items for HO optimization.	All
Downlink Operational Burst Profile for OFDMA	33	2	Is sent in response to the RNG-REQ Requested Downlink Burst Profile parameter. Bit 0–3: Specifies the least robust DIUC that may be used by the BS for transmissions to the MS. Bit 4–7: Specifies Repetition Coding Indication: 0b0000 – No repetition coding 0b0001 – Repetition coding of 2 0b0010 – Repetition coding of 4 0b0011 – Repetition coding of 6 The repetition coding indication shall be 0b0000 if the DIUC refers to modulations higher than QPSK. Bit 8–15: Configuration Change Count value of DCD defining the burst profile associated with DIUC.	OFDMA
Rendezvous time	36	1	This is offset, measured in units of frame duration, when the BS is expected to provide non-contention-based ranging opportunity for the MS. The offset is calculated from the frame where RNG-RSP message is transmitted. The BS is expected to provide non-contention-based Ranging opportunity at the frame specified by Rendezvous time parameter.	OFDMA
CDMA code	37	1	A unique code assigned to the MS, to be used for dedicated ranging. Code is from the initial ranging codeset.	OFDMA
Transmission opportunity offset	38	1	A unique transmission opportunity assigned to the MS, to be used for dedicated ranging in units of symbol duration.	OFDMA
Preamble Index Override	39	Length is defined as: (Num of Preamble Index) × 1	Preamble Indices of new target BS(s) where the MS should redo ranging. If this TLV is used, the Ranging Status value shall be set to 2. This TLV shall be used for licensed bands only.	All
Ranging Abort Timer	40	1	0–255: In units of seconds.	All
QoS Parameters	[145/146]	*variable*	Compound TLV incorporating one or more 11.13 QoS Parameter Set definition encodings.	All

Table 585—RNG-RSP message encodings *(continued)*

Name	Type (1 byte)	Length	Value (variable length)	PHY scope
SFID	[145/146].1	4	—	All
Global Service Class Name	[145/146].35	*variable*	Compound TLV incorporating one or more Global Service Class Name encodings (11.13.23).	All

Power_Saving_Class_Parameters Value field is composed from a number of encapsulated TLV fields as specified in Table 583.

In addition to the RNG-RSP TLVs listed in Table 585, which are applicable to multiple PHY specifications, sets of PHY specification specific RNG-RSP TLVs are provided in Table 586 and Table 587.

Table 586—OFDM-specific RNG-RSP message encodings

Name	Type	Length	Value
Ranging subchannel	150	1	Used to indicate the OFDM subchannel reference that was used to transmit the initial ranging message (OFDM with subchannelization). Ranging subchannels are numbered from 01 to 0x1F according to Table 248.

Table 587—OFDMA-specific RNG-RSP message encodings

Name	Type	Length	Value
Ranging code attributes	150	4	Bits 31:22—Used to indicate the OFDM time symbol reference that was used to transmit the ranging code. Bits 21:16—Used to indicate the OFDMA subchannel reference that was used to transmit the ranging code. Bits 15:8—Used to indicate the ranging code index that was sent by the SS. Bits 7:0—The 8 LSBs of the frame number of the OFDMA frame where the SS sent the ranging code.

11.7 REG-REQ/RSP management message encodings

The TLV encodings defined in Table 584 and in 11.7.1 through 11.7.22 are specific to the REG-REQ (6.3.2.3.7) and REG-RSP (6.3.2.3.8) MAC management messages.

Type	Parameter	Type	Parameter
1	ARQ Parameters	27	Handover Supported Field
2	SS Management Support	28	System Resource Retain Timer

Type	Parameter	Type	Parameter
3	IP Management Support	29	HO Process Optimization MS Timer
4	IP Version	30	MS Handover Retransmission Timer
5	Secondary Management CID	31	Mobility Features Supported
6	The Number of Uplink TransportCID Supported	32	Sleep Mode Recovery Time
7	Classification, PHS Options, SDU Encapsulation Support	33	MS-PREV-IP-ADDR
8	Maximum Number of Classifiers	34	SKIP-ADDR-ACQUISTION
9	PHS Support	35	SAID Update Encodings
10	ARQ Support	36	Total Number of Provisional Service Flow
11	DSx Flow Control	37	Idle Mode Timeout
12	*Reserved*	38	*Reserved*
13	MCA Flow Control	39	*Reserved*
14	Multicast Polling Group CID Support	40	ARQ-ACK Type
15	The Number of Downlink Transport CID Supported	41	MS HO Connections Parameters Processing Time
16	ROHC Support	42	MS HO TEK Processing Time
17	*Reserved*	43	MAC Header and Subheader Support
18	*Reserved*	44	SN Reporting Base
19	*Reserved*	45	MS timer T4
20	Maximum MAC Data per Frame Support	46	Handover Indication Readiness Timer
21	Packing Support	47	BS Switching Timer
22	MAC Extended rtPS Support	48	Power Saving Class Capability
23	Maximum Number of Bursts Transmitted Concurrently to the MS	49	Extended capability
24	CID Update Encodings	50	Co-located Coexistence Capability Supported
25	Compressed CID Update Encodings	51	H-FDD sleep capabilities
26	Method for Allocating IP Address for the Secondary Management Connection	52	MBS capabilities

11.7.1 ARQ Parameters

This field provides the fragmentation and ARQ parameters applied during the establishment of the secondary management connection. For purposes of ARQ parameter negotiation, the appearance of the field

in the REG-REQ message is equivalent to its appearance in the DSA-REQ message. The appearance of the field in the REG-RSP message is equivalent to its appearance in the DSA-RSP message.

This field is a compound TLV that may take on any of the ARQ parameters described in 11.13.17. The subtype values defined for use within the 145/146 service flow definitions are applicable for this TLV as well.

Type	Length	Value	Scope
1	*variable*	Compound	REG-REQ, REG-RSP

11.7.2 SS management support

This field indicates whether the SS is managed by standard-based IP messages over the secondary management connection. When the SS indicates in the REG-REQ that it is managed, the BS shall respond with this field in the REG-RSP message to indicate if the BS supports SS management. If BS also supports SS management, the BS and SS shall perform stages g), h), and i) of the initial network entry process (see 6.3.9). Otherwise, if the BS or the SS does not support SS management, these stages shall be skipped by the BS and SS. If this TLV is not included in REG-REQ and REG-RSP message, it means that SS has no secondary management connection.

Type	Length	Value	Scope
2	1	0 = No secondary management connection (default) 1 = Secondary management connection	REG-REQ, REG-RSP

11.7.3 IP management mode

The IP management mode parameter dictates whether the provider intends to manage the SS on an ongoing basis via IP-based mechanisms. If this TLV is not included in REG-REQ and REG-RSP message, it means that SS is the unmanaged mode.

Type	Length	Value	Scope
3	1	0 = Unmanaged mode (default) 1 = IP-managed mode	REG-REQ (see 6.3.2.3.7), REG-RSP (see 6.3.2.3.8)

11.7.4 IP version

This field indicates the version of IP used on the secondary management connection.

Type	Length	Value	Scope
4	1	Bit 0: 4 (default) Bit 1: 6 Bits 2–7: *Reserved*; shall be set to zero	REG-REQ, REG-RSP

11.7.5 Secondary Management CID

This parameter contains the Secondary Management CID issued to an SS.

Type	Length	Value	Scope
5	2	Secondary Management CID	REG-RSP

11.7.6 Number of CIDs supported

11.7.6.1 Number of Uplink Transport CIDs Supported field

This field shows the number of UL transport CIDs the SS can support.

Type	Length	Value	Scope
6	2	Number of UL Transport CIDs the SS can support.	REG-REQ, REG-RSP

11.7.6.2 Number of Downlink Transport CIDs Supported field

This field shows the number of DL transport CIDs the SS can support.

Type	Length	Value	Scope
15	2	Number of DL Transport CIDs the SS can support.	REG-REQ, REG-RSP

11.7.7 CS capabilities

11.7.7.1 Classification/PHS options and SDU encapsulation support

This parameter indicates which classification/PHS options and SDU encapsulation the SS supports. By default, Packet, IPv4 and IEEE 802.3/Ethernet shall be supported, thus absence of this parameter in REG-REQ means that named options are supported by the SS. When the length field of the TLV is 2, it indicates that bits 16–31 should be considered to be equal to zero.

Type	Length	Bit	CS	CS subpart	Traffic constraint	Scope
7	2 or 4	0	ATM (5.1)	N/A	None	REG-REQ REG-RSP
		1	Packet (5.2)	IP (5.2.5)	IPv4 Traffic Only	
		2	Packet (5.2)	IP (5.2.5)	IPv6 Traffic Only	
		3	Packet (5.2)	IEEE 802.3/ Ethernet (5.2.4)	None	
		4	*Reserved*			
		5	Packet (5.2)	IEEE 802.3/ Ethernet (5.2.4)	IPv4 Traffic Only	
		6	Packet (5.2)	IEEE 802.3/ Ethernet (5.2.4)	IPv6 Traffic Only	
		7	*Reserved*			
		8	*Reserved*			
		9	*Reserved*			
		10	*Reserved*			
		11	*Reserved*			
		12	*Reserved*			
		13: GPCS	GPCS (5.3)	N/A	Determined by GPCS_PROTOCOL_ TYPE TLV (11.13.18.5)	
		14	Packet (5.2)	IP (5.2.5)	None	
		15–31: *Reserve*d; shall be set to zero	*Reserved*			

11.7.7.2 Maximum number of classification rules

This is the maximum number of admitted classification rules that the SS supports.

Type	Length	Value	Scope
8	2	Maximum number of simultaneous admitted classification rules	REG-REQ, REG-RSP

The default value is 0 (no limit).

11.7.7.3 PHS support

This parameter indicates the level of PHS support.

Type	Length	Value	Scope
9	1	Bit 0: ATM PHS Bit 1: Packet PHS Bit 2: GPCS PHS Bit 3–7: *Reserved*; shall be set to zero	REG-REQ, REG-RSP

A bit value of 1 indicates the associated PHS feature is supported.

The default value is 0 (no PHS).

11.7.7.4 ROHC support

This parameter is used by the SS or BS to indicate support for ROHC.

Type	Length	Value	Scope
16	1	0: ROHC not supported 1: ROHC supported 2–255: *Reserved*	REG-REQ, REG-RSP

11.7.8 SS capabilities encodings

11.7.8.1 ARQ Support

This field indicates the availability of SS support for ARQ.

Type	Length	Value	Scope
10	1	0: No ARQ support capability 1: ARQ supported 2–255: *Reserved*	REG-REQ, REG-RSP

11.7.8.2 DSx flow control

This field specifies the maximum number of concurrent DSA, DSC, or DSD transactions that may be outstanding. An SS shall maintain only one outstanding DSA, DSC or DSD transaction for any service flow.

Type	Length	Value	Scope
11	1	0 indicates no limit (default) 1–255 indicate maximum concurrent transactions	REG-REQ, REG-RSP

11.7.8.3 MCA flow control

This field specifies the maximum number of concurrent MCA transactions that may be outstanding.

Type	Length	Value	Scope
13	1	0 indicates no limit (default) 1–255 indicate maximum concurrent transactions	REG-REQ, REG-RSP

11.7.8.4 Multicast polling group CID support

This field indicates the maximum number of simultaneous multicast polling groups to which the SS is capable of belonging.

Type	Length	Value	Scope
14	1	0–255 Default = 0	REG-REQ, REG-RSP

11.7.8.5 Maximum MAC data per frame support

This compound TLV defines the maximum amount of MAC level data including MAC headers and HARQ retransmission bursts the MS is capable of processing in the DL/UL part of a single MAC frame. A value of 0 indicates such limitation does not exist, except the limitation of the physical medium. If those TLVs are absent then the default value (0) should be used.

Name	Type	Length	Value	Scope
Maximum MAC Data Per Frame Support	20	*variable*	Compound	REG-REQ, REG-RSP (OFDMAPHY only)

11.7.8.5.1 Maximum amount of MAC level data per DL frame

Name	Type	Length	Value	Scope
Maximum amount of MAC level data per DL frame	20.1	2	Maximum amount of MAC level data per DL frame (in unites of 256 bytes). A value of 0 means unlimited.	REG-REQ, REG-RSP (OFDMAPHY only)

11.7.8.5.2 Maximum amount of MAC level data per UL frame

Name	Type	Length	Value	Scope
Maximum amount of MAC level data per UL frame	20.2	2	Maximum amount of MAC level data per UL frame (in unites of 256 bytes). A value of 0 means unlimited.	REG-REQ, REG-RSP (OFDMAPHY only)

11.7.8.6 Packing support

The Packing Support field indicates the availability of MS support for packing. Packing support for the BS is mandatory.

Type	Length	Value	Scope
21	1	0: No packing support capability 1: Packing supported 2–255: Reserved	REG-REQ, REG-RSP

11.7.8.7 MAC Extended rtPS support

The MAC Extended rtPS Support field indicates the availability of SS support for extended rtPS.

Type	Length	Value	Scope
22	1	0 = No Extended rtPS support (default) 1 = Extended rtPS support	REG-REQ, REG-RSP

11.7.8.8 Maximum number of bursts transmitted concurrently to the MS

Type	Name	Length (1 byte)	Value (variable length)
23	Max_Num_Bursts	1	Valid values: 1–16 Maximum number of bursts transmitted concurrently to the MS. Includes all bursts without CID or with CIDs matching then MS's CIDs.

11.7.8.9 Co-located coexistence capability supported

The Co-located Coexistence Capability Supported TLV indicates if co-located coexistence is supported. MSs and BSs that support co-located coexistence shall identify themselves by including this TLV. For each bit, a value of 0 indicates "not supported" while 1 indicates "supported."

Type	Length	Value	Scope
50	1	Bit 0: PSC-based co-located coexistence mode 1 Bit 1: PSC-based co-located coexistence mode 2 Bit 2: Sleep mode follows the MAP relevance for PSC-based co-located coexistence Bit 3: Uplink band AMC for PSC-based co-located coexistence Bit 4–7: *Reserved*	REG-REQ, REG-RSP

11.7.8.10 H-FDD sleep capabilities

H-FDD sleep capabilities TLV indicates if sleep mode is supported in HFDD mode. For each bit, a value of 0 indicates "not supported" while 1 indicates "supported."

Type	Length	Value	Scope
51	1	Bit 0: Support for sleep mode following MAP relevance for H-FDD Bits 1–7: *Reserved*	REG-REQ, REG-RSP

11.7.8.11 Extended capability

The extended capability field specifies extended capability support for the specified features. For each bit, a value of 0 indicates "not supported" while 1 indicates "supported." If the TLV is not transmitted, the default value of each mentioned capability is "not supported."

Type	Length	Value	Scope
49	1	Bit 0: Indicates the capability to support ARQ Map Last Bit concept and the optimized Sequence Block as defined in Table 170. The feature is enabled only in case both MS and BS support it. Bit 1: Indicates the capability to sup-port BS_Controlled_HO (see 6.3.21.2.2). If the MS does not support this capability, it may ignore the BS_Controlled_HO flag in the DCD. Bit 2: Indicates support for Group parameter Create/Change TLV (11.13.39) Bits 3–7: *Reserved*, set to zero.	REG-REQ, REG-RSP

11.7.9 CID Update Encodings field

The CID Update Encodings field provides a translation table that allows an MS to update its service flow and connection information so that it may continue service after an HO to a new serving BS.

Name	Type (1 byte)	Length (1 byte)	Value (variable length)	Scope
CID_update	24	*variable*	Compound	REG-RSP

These TLV values shall appear in each CID Update TLV.

Name	Type (1 byte)	Length (1 byte)	Value (variable length)
New_CID	24.1	2	New CID after HO to new BS.
SFID	24.2	4	Service flow ID

The following TLV element may appear in a CID Update TLV.

Name	Type (1 byte)	Length (1 byte)	Value (variable length)
Connection Info	24.3	*variable*	If any of the service flow parameters change, then those service flow parameter encoding TLVs that have changed will be added. Connection Info is a compound TLV value that encapsulates the service flow parameters that have changed for the service. All the rules and settings that apply to the parameters when used in the DSC-RSP message apply to the contents encapsulated in this TLV.

11.7.9.1 Compressed CID Update Encodings field

The Compressed CID Update Encodings field provides a translation table that allows an MS to update its CID. Only CIDs that have no parameter change can be translated by this TLV.

Name	Type	Length	Value	Scope
Compressed CID update	25	*variable*	The first byte indicates the length of the following BITMAP in bytes. The *n*-th bit, starting from the MSB of the BITMAP is set to 1 when the *n*-th SFID is to be updated to a new CID. Where, the SFIDs are sorted with increasing order. After the BITMAP, a list of new CID follows. The number of new CID is equal to the number of ones in the BITMAP.	REG-RSP

11.7.10 Method for allocating IP address for the secondary management connection

Type	Length	Value	Scope
26	1	Bit 0: DHCP Bit 1: Mobile IPv4 Bit 2: DHCPv6 Bit 3: IPv6 Stateless Address Autoconfiguration Bits 4–7: *Reserved;* shall be set to zero	REG-REQ, REG-RSP

11.7.11 Reserved

11.7.12 HO Support

11.7.12.1 System Resource_Retain_Time

The Resource_Retain_Time is the duration for MS's connection information that will be retained in serving BS. BS shall start Resource_Retain_Time timer at MS notification of pending HO attempt through MOB_HO-IND or by detecting an MS drop. The unit of this value is 100 ms.

Type	Length	Value	Scope
28	2	0–65535: In units of 100 milliseconds 300 (30 000 ms) is the default	REG-RSP

11.7.12.2 HO Process Optimization MS Timer

During network reentry, the HO Process Optimization MS Timer is the duration in frames the MS shall wait until receipt of the next unsolicited network reentry MAC management message as indicated in the HO Process Optimization element of the RNG-RSP message. MS shall start HO Process Optimization MS Timer on receipt of RNG-RSP with HO Process Optimization message element indicating one or more unsolicited network reentry MAC management messages are pending and required to complete network reentry and establish MS Normal Operation with target BS. HO Process Optimization MS Timer shall recycle on MS receipt of any unsolicited network reentry MAC management message and shall terminate on MS establishment of Normal Operation with the target BS. On HO Process Optimization MS Timer timeout and while HO Process Optimization MS Timer Retries is valid, MS shall send the network reentry MAC management request message corresponding to the expected and pending network reentry MAC management response message as indicated in HO Process Optimization and recycle HO Process Optimization MS Timer.

Type	Length	Value	Scope
29	1	In frames	REG-REQ, REG-RSP

11.7.12.3 MS Handover Retransmission Timer

After an MS transmits MOB_MSHO-REQ to initiate an HO process, it shall start MS Handover Retransmission Timer and shall not transmit another MOB_MSHO-REQ until the expiration of the MS Handover Retransmission Timer.

Type	Length	Value	Scope
30	1	In frames	REG-RSP

11.7.12.4 HO parameters processing time

Name	Type	Length	Value	Scope
MS HO connections parameters processing time	41	1	Time in ms the MS needs to process information on connections provided in RNGRSP or REG-RSP message during HO	REG-REQ, REG-RSP
MS HO TEK processing time	42	1	Time in ms the MS needs to completely process TEK information during HO	REG-REQ, REG-RSP

11.7.12.5 Handover Supported field

The Handover Supported field indicates what type(s) of HO the BS and the MS supports. A bit value of 0 indicates “not supported” while 1 indicates it is supported.

Type	Length	Value	Scope
27	1	Bit 0: MDHO/FBSS HO supported when it is set to 1. When this bit is set to 0, the BS shall ignore Bits 1–4. Bit 1: MDHO DL RF Combining supported with monitoring MAPs from active BSs when this bit is set to 1 Bit 2: MDHO DL soft Combining supported with monitoring single MAP from anchor BS when this bit is set to 1. Bit 3: MDHO DL soft combining supported with monitoring MAPs from active BSs when this bit is set to 1 Bit 4: MDHO UL Multiple transmission is supported when this bit is set to 1 Bit 5: Seamless HO is supported when this bit is set to 1. Bit 6: Additional action time is supported when this bit is set to 1 Bits 7: *Reserved*, shall be set to zero	REG-REQ REG-RSP

11.7.12.6 Handover indication readiness timer

During HO preparation phase, after transmitting the MOB_BSHO-REQ or the MOB_BSHO-RSP messages, the serving BS may allocate an unsolicited UL grant to enable MS to transmit MOB-HO-IND without issuing BW request.

During initial network entry, MS may transmit REG-REQ with Handover Indication Readiness Timer TLV, which is used to declare the minimum time it may require to process MOB_BSHO-REQ or MOB_BSHO-RSP messages.

The BS shall respond in REG-RSP with Handover Indication Readiness Timer TLV. The value included in REG-RSP shall be the greater of the MS supported value and the BS supported value (The BS value is the minimum time required to allocate an unsolicited UL grant. Handover Indication Readiness Timer is relative to the frame in which MOB_BSHO-REQ/RSP message is transmitted.

A value of 1 means the HO indication may be sent in the frame succeeding MOB_BSHO-REQ/RSP.

Type	Length	Value	Scope
46	1	In frames. Default =2	REG-REQ, REG-RSP

11.7.12.7 BS switching timer

The serving BS uses Handover Indication Readiness Timer (11.7.12.6) and BS Switching Timer to determine Action Time in MOB_BSHO-REQ/RSP messages.

BS Switching Timer is the minimum time the MS requires between transmission of MOB_HO-IND message at the serving BS, until it is able to receive Fast_Ranging_IE at the target BS.

Type	Length	Value	Scope
47	1 or 2	Minimum time from transmission of MOB_HO-IND at the serving BS until proper reception of Fast_Ranging_IE at the target BS [in frames, minimum value is 1] Bits 0–3: minimum time for intra-FA HO default = 2 Bits 4–7: minimum time for inter-FA HO default =3 Bits 8–15: minimum time for inter-FFT HO; 0xFF = coordinated handover not supported when FFT changes; default = 0xFF NOTE—Bits 8 –15 shall only be sent if length = 2.	REG-REQ

11.7.13 Mobility parameters support

The parameters in 11.7.13.1 are associated with mobile operations.

11.7.13.1 Mobility features supported

The Mobility Features Supported field indicates whether the MS supports mobility HO, sleep mode, and idle mode. A bit value of 0 indicates “not supported” while 1 indicates “supported.”

Type	Length	Value	Scope
31	1	Bit 0: Mobility (HO) support Bit 1: Sleep mode support Bit 2: Idle mode support	REG-REQ, REG-RSP

11.7.13.2 Power saving class capability

For MS supporting sleep mode, this parameter defines the capability of the MS supporting power saving class in sleep mode.

Type	Length	Value	Scope
48	2	Bit 0: Power saving class type I supported Bit 1: Power saving class type II supported. Bit 2: Power saving class type III supported Bit 3: Multiple active power saving classes supported. Bits 4–9: Total number of power saving class instances of all types supported by the MS. Bits 10–15: *Reserved*	REG-REQ REG-RSP

11.7.14 Sleep mode recovery time

The Sleep Mode Recovery Time field indicates the time required for an MS that is in a sleep mode to return to awake mode. This parameter is optional and may be used by the BS to determine sleep interval window sizes when initiating sleep mode with an MS.

Type	Length	Value	Scope
32	1	Number of frames required for the MS to switch from sleep mode to awake mode.	REG-REQ

11.7.15 MS-PREV-IP-ADDR

The MS-PREV-IP-ADDR parameter specifies the IP address that the MS was assigned on the secondary management connection based on an association with its last serving BS. An IPv4 address shall be specified in conventional dotted format, e.g., 134.234.2.3. An IPv6 address may be expressed in abridged or unabridged form; however, the form chosen shall be consistent with RFC 2373.

Type	Length	Value	Scope
33	*variable*	String	REG-REQ

11.7.16 SKIP-ADDR-ACQUISITION

The SKIP-ADDR-ACQUISITION parameter indicates to an MS whether it should reacquire its IP address on the secondary management connection and related context or reuse its prior context.

Type	Length	Value	Scope
34	1	0: No IP address change 1: Reacquire IP address	REG-RSP

11.7.17 SAID Update Encodings field

The SAID Update Encodings field provides a translation table that allows an MS to update its security associations so that it may continue security service after an HO to a new serving BS.

Name	Type	Length (1 byte)	Value	Scope
SAID update	35	*variable*	Compound	REG-RSP

The following TLV values shall appear in each SAID Update TLV.

Name	Type (1 byte)	Length (1 byte)	Value (variable length)
New SAID	35.1	2	New SAID after HO to new BS
Old SAID	35.2	2	Old SAID before HO from old BS

11.7.18 Total number of provisioned service flow

When a BS shall transmit multiple DSA transactions for provisioned service flows, BS may include this TLV in REG-RSP message for provisioned service flows in order to indicate how many DSA transactions with provisioned service flows will be transmitted.

Type	Length	Value	Scope
36	1	Total number of DSA transactions for provisioned service flows for an MS	REG-RSP

11.7.19 Idle mode

11.7.19.1 Idle mode timeout

This value is the MS-reported default timer value for MS idle mode timer.

Type	Length	Value	Scope
37	2	Maximum time interval between MS idle mode location updates in seconds (default = 4096 s)	REG-REQ, REG-RSP

11.7.20 ARQ-ACK Type

The value of this parameter specifies the ARQ ACK type supported by the MS. The MS shall transmit this parameter if ARQ is supported. The requester includes its desired setting in the REQ message. The receiver of the REQ message shall take the common part of the values it prefers and values in the REQ message. Those common values are included in the RSP message and become the agreed upon the values set. Absence of the parameter during a REG dialog shall indicate the originator of the message desires all the possible ACK type to be supported.

Type	Length	Value	Scope
40	1	Bit 0:Selective ACK entry Bit 1:Cumulative ACK entry Bit 2:Cumulative with Selective ACK entry Bit 3:Cumulative ACK with Block Sequence ACK Bit 4: Sequence block ACK entry (valid only if extended capability is supported) Bits 5–7: *Reserved*	REG-REQ, REG-RSP

11.7.21 MAC header and extended subheader support

The MAC Header and Subheader Support field indicates whether the MS and BS support various types of MAC header and extended subheaders. This field may be sent by either BS or MS. Omission of this field from the REG-REQ/RSP message indicates that none of the headers or subheaders are supported.

Type	Length	Value	Scope
43	3	Bit 0: BR and UL Tx power report header support Bit 1: BR and CINR report header support Bit 2: CQICH allocation request header support Bit 3: PHY channel report header support Bit 4: BR and UL sleep control header support Bit 5: SN report header support Bit 6: Feedback header support Bits 7–10: SDU_SN extended subheader support and parameter Bit 7: SDU_SN extended subheader support Bits 8–10 (=p): period of SDU_SN transmission for connection with ARQ disabled = once every 2^p MAC PDUs Bit 11: DL sleep control extended subheader Bit 12: Feedback request extended subheader Bit 13: MIMO mode feedback extended subheader Bit 14: UL Tx power report extended subheader Bit 15: Mini-feedback extended subheader Bit 16: SN request extended subheader Bits 17–23: *Reserved*	REG-REQ, REG-RSP

A bit value of 0 indicates “not supported” while 1 indicates “supported.”

11.7.22 SN Reporting Base

SN Reporting Base indicates the (negative of the) base value that the MS shall use in sending fast DL measurement feedback on an enhanced fast-feedback channel.

Type	Length	Value	Scope
44	1	A positive integer in the range 0–255; the base value used in reporting shall be the negative of this value	REG-RSP

11.7.23 MS periodic ranging timer information

This value indicates MS value of T4 timer, used for triggering the periodic ranging as described in 6.3.2.3.24 and illustrated in Figure 102.

Type	Length	Value	Scope
45	1	Unsigned integer representing MS timer T4 in seconds	REG-REQ

11.7.24 MBS capabilities

The MBS capability parameter indicates type of supported MBS service. If this TLV is included with all bits set to 0, then this shall indicate that the MS or BS does not support MBS services. A bit value of 1 indicates the associated MBS service type is supported.

Type	Length	Value	Scope
52	1	Bit 0: MBS in Serving BS Only is supported Bit 1: Macro diversity Multi BS MBS is supported Bit 2: Non-macro-diversity Multi BS MBS is supported Bit 3–7: *Reserved*	REG-REQ, REG-RSP

11.8 SBC-REQ/RSP management message encodings

The TLV encodings defined in Table 588 through Table 591 and this subclause are specific to the SBC-REQ (6.3.2.3.23) and SBC-RSP (6.3.2.3.24) MAC management message dialog.

Table 588—SBC-REQ/RSP management message encodings

Type	Parameter	Type	Parameter
1	Bandwidth allocation support	29	Service Information Query (SIQ)
4	Capabilities for construction and transmission of MAC PDUs	46	MIH capability support
15	PKM flow control	147	Current TX power
17	Maximum number of security associations	167	Association type support
25	Security negotiation subattributes	180	Visited NSP ID
25.1	PKM version support	181	Auth type for single EAP
25.2	Authorization policy support	182	Visited NSP Realm
25.3	MAC (message authentication) mode	183	SII-ADV message pointer
25.4	PN window size	184	SDU MTU capability
27	Extended subheader capability		
28	HO trigger metric support		

Table 589—SBC-REQ/RSP management message encodings (SC PHY-specific)

Type	Parameter	Type	Parameter
150	SC SS demodulator types	152	SC SS downlink FEC types fields
151	SS SS modulator type	153	SC SS uplink FEC types fields

Table 590—SBC-REQ/RSP management message encodings (OFDM PHY-specific)

Type	Parameter	Type	Parameter
2	Subscriber transition gaps	152	OFDM SS modulator
3	Maximum TX power	154	OFDM SC TC sublayer support
150	OFDM SS FFT sizes	155	OFDM private map support
151	OFDM SS demodulator	156, 157	OFDM SS UL power control support

Table 591—SBC-REQ/RSP management message encodings (OFDMA PHY-specific)

Type	Parameter	Type	Parameter
2	Subscriber transition gaps	163	HARQ Chase combining and CC-IR buffer capability
3	Maximum TX power	170, 171	OFDMA SS UL power control support
150	OFDMA MS FFT sizes	172	OFDMA MAP capability
151	OFDMA SS demodulator	173	UL control channel support
152	OFDMA SS modulator	174	OFDMA MS CSIT capability
153	Number of UL HARQ channels	175	Maximum number of bursts per frame capability in HARQ
154	OFDMA SS permutation support	176	OFDMA SS demodulator for MIMO support
158	OFDMA AAS private map support	177	OFDMA SS modulator for MIMO support
159	OFDMA AAS capabilities	178	SDMA pilot capability
160	OFDMA SS CINR measurement capability	179	OFDMA multiple DL burst profile capability
161	Number of DL HARQ channels	204	OFDMA parameters sets
162	HARQ incremental redundancy buffer capability	205	Extended OFDMA SS CINR measurement capability

11.8.1 Bandwidth Allocation Support

This field indicates properties of the SS that the BS needs to know for bandwidth allocation purposes. If the BS indicates Half-Duplex capability (Bit 1 = 0) during SBC-RSP, a full-duplex MS shall operate as an H-FDD MS and follow H-FDD procedures (see 8.4.4.2).

Type	Length	Value	Scope
1	1	Bit 0: *Reserved*; shall be set to zero Bit 1 = 0: Half-Duplex (FDD only) Bit 1 = 1: Full-Duplex (FDD only) Bits 2–7: *Reserved*; shall be set to zero	SBC-REQ (see 6.3.2.3.23) SBC-RSP (see 6.3.2.3.24)

11.8.2 Capabilities for Construction and Transmission of MAC PDUs

Type	Length	Value	Scope
4	1	Bit 0: Ability to receive requests piggybacked with data Bit 1: Ability to use 3-bit FSN values used when forming MAC PDUs on non-ARQ connections Bits 2–7: *Reserved*; shall be set to zero	SBC-REQ (see 6.3.2.3.23) SBC-RSP (see 6.3.2.3.24)

11.8.3 Physical Parameters Supported

11.8.3.1 Subscriber transition gaps

This field indicates the transition gap SSTTG and SSRTG for TDD and H-FDD SSs. This parameter is not used by WirelessMAN-SC. Instead, performance is mandated in Table 244.

Type	Length	Value	Scope
2	2	Bits 0–7: SSTTG (µs) Bits 8–15: SSRTG (µs) Allowed values: OFDM mode: TDD and H-FDD 0...100. Other modes: TDD: 0…50; H-FDD: 0…100	SBC-REQ (see 6.3.2.3.23) SBC-RSP (see 6.3.2.3.24)

11.8.3.2 Maximum Tx power

The maximum available power for BPSK, QPSK, 16-QAM, and 64-QAM constellations. The maximum power parameters are reported in dBm and quantized in 0.5 dBm steps ranging from -64 dBm (encoded 0x00) to 63.5 dBm (encoded 0xFF). Values outside this range shall be assigned the closest extreme. SSs that do not support QAM64 shall report the value of 0x00 in the maximum QAM64 power field. This parameter is only applicable to systems supporting the OFDM or OFDMA PHY specifications.

Type	Length	Value	Scope
3	4	Bit 0–7: Maximum transmitted power for BPSK. Bit 8–15: Maximum transmitted power for QPSK. Bit 15–23: Maximum transmitted power for 16-QAM. Bit 24–31: Maximum transmitted power for 64-QAM. SSs that do not support 64-QAM shall report the value 0x00.	SBC-REQ

An OFDMA MS that supports Uplink Channel Sounding shall use the BSPK value to report the maximum transmit power for the Uplink Channel Sounding Transmission.

11.8.3.3 WirelessMAN-SC specific parameters

11.8.3.3.1 SC SS demodulator types

This field indicates the different modulation types supported by an SS for DL reception. This field is not used for other PHY specifications. A bit value of 0 indicates "not supported" while 1 indicates "supported."

Type	Length	Value	Scope
150	1	Bit 0: QPSK Bit 1: 16-QAM Bit 2: 64-QAM Bit 3–7: *Reserved*; shall be set to zero	SBC-REQ (see 6.3.2.3.23) SBC-RSP (see 6.3.2.3.24)

11.8.3.3.2 SC SS modulator types

This field indicates the different modulation types supported by an SS for UL transmission. This field is not used for other PHY specifications. A bit value of 0 indicates "not supported" while 1 indicates "supported."

Type	Length	Value	Scope
151	1	Bit 0: QPSK Bit 1: 16-QAM Bit 2: 64-QAM Bit 3–7: *Reserved*, shall be set to 0	SBC-REQ (see 6.3.2.3.23) SBC-RSP (see 6.3.2.3.24)

11.8.3.3.3 SC SS Downlink FEC Types field

This field indicates the different FEC types supported by an SS for DL reception. This field is not used for other PHY specifications. A bit value of 0 indicates "not supported" while 1 indicates "supported."

Type	Length	Value	Scope
152	1	Bit 0: Code Type 1 as in Table 221 Bit 1: Code Type 2 as in Table 221 Bit 2: Code Type 3 as in Table 184 Bits 3–7: *Reserved*, shall be set to 0	SBC-REQ (see 6.3.2.3.23) SBC-RSP (see 6.3.2.3.24)

11.8.3.3.4 SC SS Uplink FEC Types field

This field indicates the different FEC types supported by an SS for UL transmission. This field is not used for other PHY specifications. A bit value of 0 indicates "not supported," while 1 indicates "supported."

Type	Length	Value	Scope
153	1	Bit 0: Code Type 1 as in Table 221 Bit 1: Code Type 2 as in Table 221 Bit 2: Code Type 3 as in Table 184 Bits 3–7: *Reserved*, shall be set to 0	SBC-REQ (see 6.3.2.3.23) SBC-RSP (see 6.3.2.3.24)

11.8.3.4 WirelessMAN-OFDM specific parameters

11.8.3.4.1 OFDM SS FFT sizes

This field indicates the FFT sizes supported by the SS. For each FFT size, a bit value of 0 indicates "not supported" while 1 indicates "supported."

Type	Length	Value	Scope
150	1	Bit 0: 256-FFT Bit 1: 2048-FFT Bits 2–7: *Reserved*, shall be set to zero	SBC-REQ (see 6.3.2.3.23) SBC-RSP (see 6.3.2.3.24)

11.8.3.4.2 OFDM SS demodulator

This field indicates the different demodulator options supported by a WirelessMAN-OFDM PHY SS for DL reception. This field is not used for other PHY specifications. A bit value of 0 indicates "not supported" while 1 indicates "supported."

Type	Length	Value	Scope
151	1	Bit 0: 64-QAM Bit 1: BTC Bit 2: CTC Bit 3: STC Bit 4: AAS Bit 5: Subchannelization Bit 6: *Reserved*; shall be set to zero	SBC-REQ (see 6.3.2.3.23) SBC-RSP (see 6.3.2.3.24)

11.8.3.4.3 OFDM SS modulator

This field indicates the different modulator options supported by a WirelessMAN-OFDM PHY SS for UL transmission This field is not used for other PHY specifications. A bit value of 0 indicates "not supported" while 1 indicates "supported."

Type	Length	Value	Scope
152	1	Bit 0: 64-QAM Bit 1: BTC Bit 2: CTC Bit 3: Subchannelization Bit 4: Focused contention BR Bit 5: UL preamble/midamble cyclic delay Bits 6–7: *Reserved*; shall be set to zero	SBC-REQ (see 6.3.2.3.23) SBC-RSP (see 6.3.2.3.24)

11.8.3.4.4 OFDM SS TC sublayer support

This field indicates whether the SS supports the TC sublayer (see 8.3.4). A bit value of 0 indicates "not supported" while 1 indicates "supported."

Type	Length	Value	Scope
154	1	Bit 0: TC sublayer support; default value = 0 Bits 1–7: *Reserved*; shall be set to zero	SBC-REQ (see 6.3.2.3.23) SBC-RSP (see 6.3.2.3.24)

11.8.3.4.5 OFDM private map support

The OFDM Private Map Support field indicates the private map parameters supported by a WirelessMAN-OFDM SS.

Type	Length	Value	Scope
155	1	Bit 0: regular private map support Bit 1: compressed and reduced private map support Bit 2–7: *Reserved*	SBC-REQ (see 6.3.2.3.23) SBC-RSP (see 6.3.2.3.24)

11.8.3.4.6 OFDM SS UL power control support

The OFDM SS UL Power Control Support field indicates the UL power control options supported by a WirelessMAN-OFDM PHY SS for UL transmission. This field is not used for other PHY specifications. A bit value of 0 indicates "not supported" while 1 indicates "supported."

Type	Length	Value	Scope
156	1	Bit 0: UL open-loop power control support Bit 1: UL AAS preamble power control support. Bit 2–7: *Reserved*; shall be set to zero.	SBC-REQ (see 6.3.2.3.23) SBC-RSP (see 6.3.2.3.24)
157	1	The minimum number of frames that SS takes to switch from the open-loop power control scheme to the closed-loop power control scheme or vice versa.	SBC-REQ (see 6.3.2.3.23) SBC-RSP (see 6.3.2.3.24)

11.8.3.5 WirelessMAN-OFDMA specific parameters

11.8.3.5.1 OFDMA MS FFT sizes

The OFDMA MS FFT Sizes field indicates the FFT sizes supported by the MS. For each FFT size, a bit value of 0 indicates "not supported" while 1 indicates "supported." This TLV also indicates which FFTs the MS can support for scanning and handover purposes. When an MS indicates it supports more than one BW, the MS shall be able to scan and handover to that BS even if the serving Bs is using a different FFT.

Type	Length	Value	Scope
150	1	Bit 0: *Reserved*, set to zero Bit 1: 2048-FFT Bit 2: 128-FFT Bit 3: 512-FFT Bit 4: 1024-FFT Bits 5–7: *Reserved*, set to zero	SBC-REQ (see 6.3.2.3.23) SBC-RSP (see 6.3.2.3.24)

11.8.3.5.2 OFDMA SS demodulator

This field indicates the different demodulator options supported by a WirelessMAN-OFDMA PHY SS for DL reception. This field is not used for other PHY specifications. A bit value of 0 indicates "not supported" while 1 indicates "supported." The SS or BS may include bits 0–7 only and set the TLV length field to 1, in which case the receiving entity shall assume that the options represented by bits 8–15 are not supported.

Type	Length	Value	Scope
151	*variable*	Bit 0: 64-QAM Bit 1: BTC Bit 2: CTC Bit 3: STC Bit 4: CC with optional interleaver Bit 5: HARQ Chase Bit 6: HARQ CTC_IR Bit 7: *Reserved*; shall be set to zero Bit 8: HARQ CC IR Bit 9: LDPC Bit 10 Dedicated pilots Bits 11–15: *Reserved*; shall be set to zero.	SBC-REQ (see 6.3.2.3.23) SBC-RSP (see 6.3.2.3.24)

This field specifies the number of DL H-ARQ channels (n) the SS supports, where n = 1..16. The value of the TLV shall be set to (n – 1).

Type	Length	Value	Scope
161	1	The number of DL H-ARQ channels	SBC-REQ (see 6.3.2.3.23) SBC-RSP (see 6.3.2.3.24)

11.8.3.5.3 OFDMA SS modulator

This field indicates the different modulator options supported by a WirelessMAN-OFDMA PHY SS for UL transmission. This field is not used for other PHY specifications. A bit value of 0 indicates “not supported” while 1 indicates “supported.”

Type	Length	Value	Scope
152	1	Bit 0: 64-QAM Bit 1: BTC Bit 2: CTC Bit 3: STC Bit 4: HARQ chase Bit 5: CTC_IR Bit 6: CC_IR Bit 7: LDPC	SBC-REQ (see 6.3.2.3.23) SBC-RSP (see 6.3.2.3.24)

This field specifies the number of UL H-ARQ channels (n) the SS supports, where n = 1..16. The value of the TLV shall be set to (n – 1).

Type	Length	Value	Scope
153	1	The number of UL_HARQ channels	SBC-REQ (see 6.3.2.3.23) SBC-RSP (see 6.3.2.3.24)

11.8.3.5.4 OFDMA SS permutation support

This field indicates the different optional OFDMA permutation modes (optional PUSC, optional FUSC, and AMC) supported by a WirelessMAN-OFDMA SS. A bit value of 0 indicates "not supported" while 1 indicates "supported."

Type	Length	Value	Scope
154	1	Bit 0: Optional PUSC support Bit 1: Optional FUSC support Bit 2: AMC 1x6 support Bit 3: AMC 2x3 support Bit 4: AMC 3x2 support Bit 5: AMC support with HARQ map Bit 6: TUSC1 support Bit 7: TUSC2 support	SBC-REQ (see 6.3.2.3.23) SBC-RSP (see 6.3.2.3.24)

NOTE—AMC support (bits 2–4) refers to support of AMC subchannelization using DL-MAP IE or ULMAP IE. When AMC support using HARQ map (bit 5) is indicated, all AMC types indicated in Format Configuration IE (6.3.2.3.38.2) are supported when using AMC with HARQ map.

11.8.3.5.5 OFDMA SS demodulator for MIMO support

The OFDMA SS Demodulator for MIMO Support field indicates the different MIMO options supported by a WirelessMAN-OFDMA PHY SS in the DL. This field is not used for other PHY specifications. A bit value of 0 indicates "not supported" while 1 indicates "supported."

The OFDMA SS Demodulator for MIMO Support field that follows indicates the MIMO capability of OFDMA MS demodulator. A bit value of 0 indicates "not supported" while 1 indicates "supported."

Type	Length	Value	Scope
176	3	Bit 0 2-antenna STC Matrix A Bit 1 2-antenna STC Matrix B, vertical coding Bit 2 2-antenna STC Matrix B, horizontal coding Bit 3: 4-antenna STC Matrix A Bit 4: 4-antenna STC Matrix B, vertical coding Bit 5: 4-antenna STC Matrix B, horizontal coding Bit 6: 4-antenna STC Matrix C, vertical coding Bit 7: 4-antenna STC Matrix C, horizontal coding Bit 8: 3-antenna STC Matrix A Bit 9: 3-antenna STC Matrix B Bit 10: 3-antenna STC Matrix C, vertical coding Bit 11: 3-antenna STC Matrix C, horizontal coding Bit 12: Capable of calculating precoding weight Bit 13: Capable of adaptive rate control Bit 14: Capable of calculating channel matrix Bit 15: Capable of antenna grouping Bit 16: Capable of antenna selection Bit 17: Capable of codebook based precoding Bit 18: Capable of long-term precoding Bit 19: Capable of MIMO Midamble Bit 20: Allocation granularity in a DL PUSC STC zone with dedicated pilots Bit 21: Concurrent allocation support in a DL PUSC STC zone with dedicated pilots Bit 22: Allocation granularity in a DL AMC STC zone with dedicated pilots for Matrix B Bit 23: Concurrent allocation support in a DL AMC STC zone with dedicated pilots for bursts with different ranks	SBC-REQ (see 6.3.2.3.23) SBC-RSP (see 6.3.2.3.24)

Bits 20, 21,22, and 23 define allocation granularity support for PUSC and AMC STC zones with dedicated pilots, respectively. They do not apply to single antenna or single stream operation. In AMC STC zone bit 22 applies only to bursts with Matrix B and bit 23 applies only to bursts with different ranks (different number of streams).

The granularity is a function of the slot duration and the pilot period. For PUSC-STC with 2 antennas, the slot duration equals 2 symbols and the pilot period equals 4 symbols. For AMC 2x3 in STC zone the slot duration equals 3 symbols and the pilot period equals 6 symbols.

If bit 20 or bit 22 are set to 1, the allocations for an MS in a DL PUSC or AMC STC zone with dedicated pilots respectively shall meet the following constraints, applicable to both non-HARQ and HARQ subbursts:

1) The allocation shall be a rectangle.
2) The smallest OFDMA symbol number of the allocation shall be a multiple the pilot period relative to the smallest OFDMA symbol number of the zone.
3) The time duration of the allocation shall be a multiple of the pilot period.

If bit 20 or bit 22 are set to 0, it indicates that the MS supports a granularity of one slot-duration (2 symbols for DL PUSC or 3 symbols for DL AMC, respectively) for an allocation in DL STC zones with dedicated pilots so long as the allocation in each subchannel in AMC and/or in each major group in PUSC is equal to or larger than the pilot period.

If bit 21 or bit 23 are set to 1, no two allocations for the MS may occupy the same slot duration in a DL PUSC or AMC STC zones with dedicated pilots respectively. For AMC, this restriction applies only to bursts with different ranks, i.e., bursts with the same rank may be concurrent. If bit 21 or bit 23 are set to 0, the MS can support multiple allocations in a given slot duration in DL PUSC or AMC STC zones with dedicated pilots respectively.

11.8.3.5.6 OFDMA AAS private map support

This field indicates the AAS private map parameters supported by a WirelessMAN-OFDMA SS.

— Private map chain enable indicates if a private map is allowed to point to another private map. If not enabled, private map chains are not allowed.
— The frame offset value indicates the frame offset the SS can support with private maps. A value of 0 indicates the private map allocations are for the subsequent frame (one frame in the future), a value of 1 indicates it is for two frames in the future. When used with compressed private maps, these fields are required to be used. When used with reduced private maps, these are minimum values and the actual frame offset is defined by the frame offset field in the private map.
— The concurrency field indicates how many parallel private map chains can be supported by an SS.

Type	Length	Value	Scope
158	1	Bit 0: HARQ MAP capability Bit 1: private map support Bit 2: Reduced private map support Bit 3: Private Map Chain Enable Bit 4: Private Map DL frame offset 0 = Support compressed private maps with Frame Offset = 0 1 = Support compressed private maps with Frame Offset = 1 Bit 5: Private Map UL frame offset 0 = Support compressed private maps with Frame Offset = 0 1 = Support compressed private maps with Frame Offset = 1 Bits 6–7: private map chain concurrency 0 = No limit 1–3 = Maximum concurrent private map chains	SBC-REQ (see 6.3.2.3.23) SBC-RSP (see 6.3.2.3.24)

11.8.3.5.7 OFDMA AAS capabilities

This field indicates the different AAS options supported by a WirelessMAN-OFDMA PHY SS in the DL. This field is not used for other PHY specifications. A bit value of 0 indicates “not supported” while 1 indicates “supported.”

Type	Length	Value	Scope
159	2	Bit 0: AAS Zone Bit 1: AAS Diversity Map Scan (AAS-DLFP) Bit 2: AAS-FBCK-RSP support Bit 3: DL AAS preamble Bit 4: UL AAS preamble Bits 5–15: *Reserved*	SBC-REQ (see 6.3.2.3.23) SBC-RSP (see 6.3.2.3.24)

A subscriber supporting any mode of AAS should set bit 0 to indicate support of AAS zone (as specified in 8.4.5.3.3). It may, in addition, use bit 1 to indicate use of the AAS-DLFP channel specified in 8.4.4.7. The

SS may indicate support of AAS preamble. An SS not supporting the preamble in DL/UL expects a preamble length of 0. Support of the AAS zone as well as support of the signaling methods "AAS Diversity Map Scan" and "AAS Direct Signaling" is relevant to both UL and DL.

11.8.3.5.8 OFDMA SS CINR measurement capability

Type	Length	Value	Scope
160	1	Bit 0: Physical CINR measurement from the preamble Bit 1: Physical CINR measurement for a permutation zone from pilot subcarriers Bit 2: Physical CINR measurement for a permutation zone from data subcarriers Bit 3: Effective CINR measurement from the preamble Bit 4: Effective CINR measurement for a permutation zone from pilot subcarriers Bit 5: Effective CINR measurement for a permutation zone from data subcarriers Bit 6: Support for 2 concurrent CQI channels Bit 7: Frequency selectivity characterization report	SBC-REQ (see 6.3.2.3.23) SBC-RSP (see 6.3.2.3.24)

11.8.3.5.9 OFDMA SS UL power control support

The OFDMA SS UL Power Control Support field indicates the UL power control options supported by a WirelessMAN-OFDMA PHY SS for UL transmission. This field is not used for other PHY specifications. A bit value of 0 indicates "not supported" while 1 indicates "supported."

Type	Length	Value	Scope
170	1	Bit 0: UL open-loop power control support Bit 1: UL AAS preamble power control support. Bit 2–7: *Reserved*; shall be set to zero	SBC-REQ (see 6.3.2.3.23) SBC-RSP (see 6.3.2.3.24)
171	1	Bits 0–5: The minimum number of frames that SS takes to switch from the open-loop power control scheme to the closed-loop power control scheme or vice versa Bits 6–7: *Reserved*	SBC-REQ (see 6.3.2.3.23) SBC-RSP (see 6.3.2.3.24)

11.8.3.5.10 OFDMA MAP capability

The OFDMA MAP Capability field indicates the different MAP options supported by a WirelessMAN-OFDMA PHY. This field is not used for other PHY specifications. A bit value of 0 indicates "not supported" while 1 indicates "supported."

Support for Extended HARQ IE mandates a support for SUB-DL-UL-MAP for first zone.

Type	Length	Value	Scope
172	1	Bit 0: HARQ MAP Capability Bit 1: Extended HARQ IE capability Bit 2: Sub MAP capability for first zone Bit 3: Sub MAP capability for other zones Bit 4: DL region definition support Bits 5–7: *Reserved*	SBC-REQ (see 6.3.2.3.23) SBC-RSP (see 6.3.2.3.24)

11.8.3.5.11 UL control channel support

The UL Control Channel Support field indicates the different UL control channels supported by a WirelessMAN-OFDMA PHY MS for UL transmission. A bit value of 0 indicates "not supported" while 1 indicates "supported."

Type	Length	Value	Scope
173	1	Bit 0: 3-bit MIMO fast feedback Bit 1: Enhanced fast feedback Under negotiation for SBC fast feedback, if enhanced feature is enabled, the SS should use only the enhanced fast-feedback channel in the CQICH allocation IE (see 8.4.5.4.13 and 8.4.5.4.14). Bit 2: UL ACK Bit 3: *Reserved.* Shall be set to zero. Bit 4: UEP fast-feedback Bit 5: A measurement report shall be performed on the last DL burst, as described in 8.4.11.1 Bit 6: Primary/Secondary fast-feedback Bit 7: DIUC-CQI fast-feedback	SBC-REQ (see 6.3.2.3.23) SBC-RSP (see 6.3.2.3.24)

11.8.3.5.12 OFDMA MS CSIT capability

The OFDMA MS CSIT Capability field indicates MS capability of supporting CSIT (UL sounding). A bit value of 0 indicates "not supported" while 1 indicates "supported." If this field is omitted, then by default MS is considered not supporting CSIT. Capability type A indicates sounding that does not use subcarrier permutations of the DL.

Capability type B indicates sounding over subcarriers distributed according to permutations of the DL.

Type	Length	Value	Scope
174	2	Bit 0: CSIT compatibility type A. Bit 1: CSIT compatibility type B. Bit 2: Power assignment capability (indicates support for nonequal power assignment) Bits 3–5: Sounding response time capability Bits 6–9: Maximum number of simultaneous sounding instructions (0 = unlimited) Bit 10: SS does not support P values of 9 and 18 when supporting CSIT type A Bits 11–15: *Reserved*	SBC-REQ (see 6.3.2.3.23) SBC-RSP (see 6.3.2.3.24)

The sounding response time capability encodings are as follows:

Bits 3–5 Time needed for SS to respond to a sounding command transmitted by the BS
000 0.5 ms
001 0.75 ms
010 1 ms
011 1.25 ms
100 1.5 ms
101 min(2 ms, Next Frame)
110 min(5ms, Next Frame)
111 Next Frame

11.8.3.5.13 Maximum number of bursts per frame capability in HARQ

The Maximum Number of Bursts Per Frame Capability field indicates the maximum number of UL/DL data burst allocations for the SS in a single UL/DL subframe (note that the number of UL non-HARQ burst is always limited to 1). Bursts allocated using the HARQ UL MAP IE or Persistent HARQ UL MAP IE with the ACK disable field set to 1 and bursts allocated using the HARQ DL MAP IE or Persistent HARQ DL MAP IE with the ACK disable field set to 1 shall be treated as non-HARQ bursts when counting the number of UL/DL bursts per frame per MS.

Type	Length	Value	Scope
175	1	Bits 0–2: One less than the maximum number of UL HARQ bursts per HARQ-enabled MS per frame. (0b000 = 1, default) Bit 3: Indicates whether the maximum number of UL HARQ bursts per frame (i.e., bits 0–2) includes the one non-HARQ burst. (0 = not included, default) Bits 4–7: One less than the maximum number of DL HARQ bursts per HARQ-enabled MS per frame. (0b0000 = 1, default)	SBC-REQ (see 6.3.2.3.23) SBC-RSP (see 6.3.2.3.24)

11.8.3.5.14 OFDMA SS modulator for MIMO support

The OFDMA SS Modulator For MIMO Support field indicates the MIMO capability of OFDMA SS modulator. A bit value of 0 indicates “not supported” while 1 indicates “supported.”

Type	Length	Value	Scope
177	2	Bit 0: Capable of 2-antenna STC Matrix A Bit 1: Capable of 2-antenna STC Matrix B, Vertical coding Bit 2: Capable of 2-antenna STC Matrix B, Horizontal coding Bit 3: Capable of beamforming Bit 4: Capable of adaptive rate control Bit 5: Capable of single antenna transmission Bit 6: Capable of collaborative SM with one antenna Bit 7: collaborative SM with two antennas Bit 8: Capable of disabling UL subchannel rotation Bit 9–15: *Reserved*	SBC-REQ (see 6.3.2.3.23) SBC-RSP (see 6.3.2.3.24)

11.8.3.5.15 SDMA Pilot capability

Type	Length	Value	Scope
178	1	Bits 0–1: SDMA pilot pattern support for AMC zone: 0b00 – No support 0b01 – Support SDMA pilot patterns #A and #B 0b11 – Support all SDMA pilot patterns 0b10 – *Reserved* Bits 2–7: *Reserved*	SBC-REQ, SBC-RSP

11.8.3.5.16 OFDMA multiple DL burst profile capability

This value indicates DL/UL Burst Profile that shall be used for MS and BS. If this TLV is not included in SBC-REQ message, BS shall not include this TLV in SBC-RSP message.

Type	Length	Value	Scope
179	1	Bit 0: DL burst profile for multiple FEC types (Table 429) Bit 1: UL burst profile for multiple FEC types (Table 430) Bits 2–7: *Reserved*; shall be set to 0	SBC-REQ (see 6.3.2.3.23) SBC-RSP (see 6.3.2.3.24)

11.8.3.5.17 HARQ buffer capability

DL/UL HARQ buffering capability indicates the maximal number of data bits the SS is able to store for DL/UL HARQ. The buffering capability is separately indicated for N_{EP}/N_{SCH} based incremental redundancy used for CTC, and for DIUC/duration based HARQ methods (Chase combining and CC-IR), and separately for UL and DL transmissions. The buffering capability is indicated by the following two parameters:

— *Number of bits per channel.* This is the total number of data bits that the SS may buffer per HARQ channel.
— *Aggregation flag.* When this flag is clear, the number of bits is counted separately for each channel. When the flag is set, buffering capability may be shared between channels, as explained below.

The number of bits per channel is indicated as follows:

— For incremental redundancy CTC (N_{EP} based): Number of bits is indicated by N_{EP} code, according to Table 506.
— For Chase combining and CC-IR (DIUC based): Number of encoded bits is indicated by a value K=0..63 according to the following equation: Number of encoded bits = floor(512 × 2^(K/4)) Bits.

When aggregation flag is clear, the number of bits that were allocated in each HARQ channel in the last transmission shall not exceed “Number of bits per channel.”

When aggregation flag is set, the sum over all HARQ channels, of the number of bits that were allocated in the HARQ channel in the last transmission, shall not exceed the “Number of bits per channel” multiplied by the maximum number channels supported by the SS. Note that sum total of the data bits supported is the same in both cases is the same. The number of channels supported by the SS is indicated in 11.8.3.5.3.

The IR-CTC HARQ buffer capability shall also be applied to bursts for which ACK channel is not allocated (ACK disable is set).

11.8.3.5.17.1 HARQ incremental redundancy buffer capability

Type	Length	Value	Scope
162	2	Bits 0–3: N_{EP} value indicating DL HARQ buffering capability for incremental redundancy CTC. Bit 4: Aggregation flag for DL Bits 5–7: *Reserved* Bits 8–11: N_{EP} value indicating UL HARQ buffering capability for incremental redundancy CTC. Bit 12: Aggregation flag for UL Bits 13–15: *Reserved*	SBC-REQ, SBC-RSP

11.8.3.5.17.2 HARQ Chase combining and CC-IR buffer capability

Type	Length	Value	Scope
163	2	Bits 0–5: DL HARQ buffering capability for chase combining (K) Bit 6: Aggregation flag for DL Bit 7: *Reserved*. Bits 8–13: UL HARQ buffering capability for chase combining (K) Bit 14: Aggregation flag for UL Bit 15: *Reserved*	SBC-REQ, SBC-RSP

11.8.3.5.18 OFDMA parameters sets

This field indicates different parameter sets supported by a WirelessMAN-OFDMA PHY MS. This field is not used for other PHY specifications. If necessary, MS and BS may send additional TLVs to override functions and values defined in the parameter sets of this TLV.

Type	Length (bytes)	Value	Scope
204	1	Bit 0: support OFDMA PHY parameter set A Bit 1: support OFDMA PHY parameter set B Bit 2–4: HARQ parameters set 0b000: HARQ set 1 0b001: HARQ set 2 0b010: HARQ set 3 0b011: HARQ set 4 0b100: HARQ set 5 0b101-0b111: reserved Bit 5: support OFDMA MAC parameters set A Bit 6: support OFDMA MAC parameters set B Bit 7: reserved NOTE—Bit 0 and 1 shall not be set to 1 together. Bit 5 and 6 shall not be set to 1 together.	SBC-REQ SBC-RSP

The following tables define OFDMA PHY parameter set A, OFDMA PHY parameter set B, HARQ set 1, HARQ set 2, HARQ set 3, HARQ set 4 and HARQ set 5, respectively.

Sets	Items	Sub-items	References
OFDMA PHY parameter set A	Subscriber transition gap	SSTTG = 50 µsec	11.8.3.1
		SSRTG = 50 µsec	
	OFDMA SS demodulator	64 QAM	11.8.3.5.2
		CTC	
		HARQ chase	
	OFDMA SS modulator	CTC	11.8.3.5.3
		HARQ chase	
	OFDMA SS CINR measurement capability	Physical CINR measurement from the preamble	11.8.3.5.8
		Physical CINR measurement for a permutation zone from pilot subcarriers	
	OFDMA SS uplink power control support	Uplink open loop power control support	11.8.3.5.9
	OFDMA MAP capability	Extended HARQ IE capability	11.8.3.5.10
		Sub MAP capability for first zone	
	Uplink control channel support	Enhanced FAST_FEEDBACK	11.8.3.5.11
	OFDMA SS modulator for MIMO support	Capable of single antenna transmission	11.8.3.5.14

Sets	Items	Sub-items	References
OFDMA PHY parameter set B	Subscriber transition gap	SSTTG = 50 µsec	11.8.3.1
		SSRTG = 50 µsec	
	OFDMA SS demodulator	64 QAM	11.8.3.5.2
		CTC	
		STC	
		HARQ chase	
		Dedicated pilot	
	OFDMA SS modulator	CTC	11.8.3.5.3
		HARQ chase	
	OFDMA SS permutation support	AMC 2 × 3 support	11.8.3.5.4
	OFDMA SS CINR measurement capability	Physical CINR measurement from the preamble	11.8.3.5.8
		Physical CINR measurement for a permutation zone from pilot subcarriers	
		Effective CINR measurement for a permutation zone from pilot subcarriers.	
		Support for 2 concurrent CQI channels	
	OFDMA SS uplink power control support	Uplink open loop power control support	11.8.3.5.9
	OFDMA MAP capability	Extended HARQ IE capability	11.8.3.5.10
		Sub MAP capability for first zone	
	Uplink control channel support	Enhanced FAST_FEEDBACK	11.8.3.5.11
		UL ACK	
	OFDMA MS CSIT capability	CSIT compatibility type A	11.8.3.5.12
		Sounding response time capability = next frame	
		Max number of simultaneous sounding instructions = 2	
		SS does not support P values of 9 and 18 when supporting CSIT type A = 0 (SS supports P values of 9 and 18)	
	OFDMA SS demodulator for MIMO support	2-antenna STC Matrix A	11.8.3.5.5
		2-antenna STC Matrix B vertical coding	
	OFDMA SS modulator for MIMO support	Capable of collaborative SM with one antenna	11.8.3.5.14
		Capable of disabling UL subchannel rotation	
		Capable of single antenna transmission	

HARQ parameters	Items	Sub-items	References
HARQ set 1	The number of UL HARQ channel	Number of UL HARQ channels = 4	11.8.3.5.3
	The number of DL HARQ channel	Number of DL HARQ channels = 4	11.8.3.5.2
	HARQ Chase combining and CC-IR buffer capability	Downlink HARQ buffering capability for chase combining: K = 20	11.8.3.5.17.2
		Aggregation Flag for DL = 0 (OFF)	
		Uplink HARQ buffering capability for chase combining: K = 20	
		Aggregation Flag for UL = 0 (OFF)	
	Maximum number of burst per frame capability in HARQ	Maximum number of UL HARQ bursts per HARQ enabled MS per frame = 2	11.8.3.5.13
		Indicates whether the maximum number of UL HARQ bursts per frame = not included	
		Maximum number of DL HARQ bursts per HARQ enabled MS per frame = 2.	

HARQ parameters	Items	Sub-items	References
HARQ set 2	The number of UL HARQ channel	Number of UL HARQ channels = 4	11.8.3.5.3
	The number of DL HARQ channel	Number of DL HARQ channels = 4	11.8.3.5.2
	HARQ Chase combining and CC-IR buffer capability	Downlink HARQ buffering capability for chase combining: K = 20	11.8.3.5.17.2
		Aggregation Flag for DL = 1 (ON)	
		Uplink HARQ buffering capability for chase combining: K = 20	
		Aggregation Flag for UL = 0 (OFF)	
	Maximum number of burst per frame capability in HARQ	Maximum number of UL HARQ bursts per HARQ enabled MS per frame = 2	11.8.3.5.13
		Indicates whether the maximum number of UL HARQ bursts per frame = not included	
		Maximum number of DL HARQ bursts per HARQ enabled MS per frame = 2.	

HARQ parameters	Items	Sub-items	References
HARQ set 3	The number of UL HARQ channel	Number of UL HARQ channels = 8	11.8.3.5.3
	The number of DL HARQ channel	Number of DL HARQ channels = 16	11.8.3.5.2
	HARQ Chase combining and CC-IR buffer capability	Downlink HARQ buffering capability for chase combining: K = 16	11.8.3.5.17.2
		Aggregation Flag for DL = 1 (ON)	
		Uplink HARQ buffering capability for chase combining: K = 20	
		Aggregation Flag for UL = 1 (ON)	
	Maximum number of burst per frame capability in HARQ	Maximum number of UL HARQ bursts per HARQ enabled MS per frame = 2	11.8.3.5.13
		Indicates whether the maximum number of UL HARQ bursts per frame = not included	
		Maximum number of DL HARQ bursts per HARQ enabled MS per frame = 5	

HARQ parameters	Items	Sub-items	References
HARQ set 4	The number of UL HARQ channel	Number of UL HARQ channels = 8	11.8.3.5.3
	The number of DL HARQ channel	Number of DL HARQ channels = 16	11.8.3.5.2
	HARQ Chase combining and CC-IR buffer capability	Downlink HARQ buffering capability for chase combining: K = 20	11.8.3.5.17.2
		Aggregation Flag for DL = 1 (ON)	
		Uplink HARQ buffering capability for chase combining: K = 20	
		Aggregation Flag for UL = 1 (ON)	
	Maximum number of burst per frame capability in HARQ	Maximum number of UL HARQ bursts per HARQ enabled MS per frame = 2	11.8.3.5.13
		Indicates whether the maximum number of UL HARQ bursts per frame = not included	
		Maximum number of DL HARQ bursts per HARQ enabled MS per frame = 5	

HARQ parameters	Items	Sub-items	References
HARQ set 5	The number of UL HARQ channel	Number of UL HARQ channels = 8	11.8.3.5.3
	The number of DL HARQ channel	Number of DL HARQ channels = 16	11.8.3.5.2
	HARQ Chase combining and CC-IR buffer capability	Downlink HARQ buffering capability for chase combining: K = 22	11.8.3.5.17.2
		Aggregation Flag for DL = 1 (ON)	
		Uplink HARQ buffering capability for chase combining: K = 20	
		Aggregation Flag for UL = 1 (ON)	
	Maximum number of burst per frame capability in HARQ	Maximum number of UL HARQ bursts per HARQ enabled MS per frame = 2	11.8.3.5.13
		Indicates whether the maximum number of UL HARQ bursts per frame = not included	
		Maximum number of DL HARQ bursts per HARQ enabled MS per frame = 5	

The following tables define ‘OFDMA MAC parameter set A’ and ‘OFDMA MAC parameter set B’, respectively.

Sets	Items	Sub-items	References
OFDMA MAC parameter set A	Capabilities for construction and transmission of MAC PDUs	Ability to receive requests piggybacked with data	11.8.2
		No ability to use 3-bit FSN values used when forming MAC PDUs on non-ARQ connections	
	PKM Version Support	PKM version 2	11.8.4.1
	Authorization policy support	EAP-based authorization at the initial network entry	11.8.4.2
		EAP-based authorization at re-entry	
	MAC (Message Authentication Code) Mode	CMAC	11.8.4.3
	PN window size	PN Window Size in PNs = 128	11.8.4.4
	Extended subheader capability	No support of extended subheader format	11.8.5
	HO Trigger metric support	BS CINR mean = Yes	11.8.6
		BS RSSI mean = Yes	
		Relative delay = No	
		BS RTD = No	
	Association type support	No support of association	11.8.7

Sets	Items	Sub-items	References
OFDMA MAC parameter set B	Capabilities for construction and transmission of MAC PDUs	Ability to receive requests piggybacked with data	11.8.2
		No ability to use 3-bit FSN values used when forming MAC PDUs on non-ARQ connections	
	PKM Version Support	PKM version 2	11.8.4.1
	Authorization policy support	EAP-based authorization at the initial network entry	11.8.4.2
		EAP-based authorization at re-entry	
	MAC (Message Authentication Code) Mode	CMAC	11.8.4.3
	PN window size	PN Window Size in PNs = 128	11.8.4.4
	Extended subheader capability	Support of extended subheader format	11.8.5
	HO Trigger metric support	BS CINR mean = Yes	11.8.6
		BS RSSI mean = Yes	
		Relative delay = No	
		BS RTD = Yes	
	Association type support	No support of association	11.8.7

11.8.3.5.19 Extended OFDMA SS CINR measurement capability

This TLV identifies extended OFDMA SS CINR measurement capabilities. A bit value of 0 indicates the attribute is not supported, while a bit value of 1 indicates the attribute is supported.

If an MS sends this TLV, it shall set bit 0 to 0b1.

Type	Length	Value	Scope
205	1	Bit 0: CINR standard deviation calculation mode 0b0: linear mode 0b1: logarithmic mode Default is 0b0. Bits 1–7: *Reserved*, set to 0.	SBC-REQ, SBC-RSP

11.8.4 Security negotiation parameters

This field is a compound attribute indicating security capabilities to negotiate before performing the initial authorization procedure and the reauthorization procedure.

Type	Length	Value	Scope
25	*variable*	The compound field contains the subattributes as defined in the table below.	SBC-REQ, SBC-RSP PKM-REQ, PKM-RSP

Subattribute	Contents
PKM Version Support	Version of privacy sublayer supported
Authorization Policy Support	Authorization policy to support
Message Authentication Code Mode	Message authentication code to support
PN Window Size	Size capability of the receiver PN window per SAID
PKM Flow Control	Maximum number of concurrent PKM transactions
Maximum Number of Supported Security Associations	Maximum number of supported SA

11.8.4.1 PKM version support

The PKM Version Support field indicates a PKM version. A bit value of 0 indicates “not supported” while 1 indicates “supported.” Both an SS and a BS should negotiate only one PKM version.

Type	Length	Value
25.1	1	Bit 0: PKM version 1 Bit 1: PKM version 2 Bits 2–7: R*eserved*; shall be set to 0

11.8.4.2 Authorization policy support

The Authorization Policy Support field indicates authorization policy used by the MS and BS to negotiate and synchronize. A bit value of 0 indicates “not supported” while 1 indicates “supported.” If this field is omitted, then both SS and BS shall use the IEEE 802.16 security, constituting X.509 digital certificates and the RSA public key encryption algorithm, as authorization policy.

Type	Length	Value
25.2	1	Bit 0: RSA-based authorization at the initial network entry Bit 1: EAP-based authorization at the initial network entry Bit 2: *Reserved*, shall be set to 0 Bit 3: Set to 0 Bit 4: RSA-based authorization at reentry Bit 5: EAP-based authorization at reentry Bit 6: *Reserved*, shall be set to 0 Bit 7: *Reserved*; shall be set to 0

The PKMv2 Auth-Request/Reply/Reject/Acknowledgement messages shall be used in the RSA-based authorization procedure.

The PKMv2 EAP-Transfer message shall be used in the EAP-based authorization procedure.

Bits 4–5 are only applied to the SBC-REQ message. Those bits shall be set to 0 in the SBC-RSP message. MS and BS shall execute the reauthorization procedure according to the authorization policy negotiated in current BS when AK lifetime is expired and so on. After MS moves into another BS, MS and target BS shall execute the reauthorization procedure according to the authorization policy of HO reentry negotiated in the target BS when the lifetime of AK, which is negotiated between MS and target BS, is expired and so on.

The MS informs the BS of all supportable authorization policies by the SBC-REQ message. The BS negotiates the authorization policy. If all bits of this attribute included in the SBC-RSP message are 0, then no authorization is applied. Both the BS and the MS shall not use the authorization function.

The following table shows possible authorization policies that the MS can support.

The table shows the bit representation of Bits 0–2 and Bits 4–6 in Authorization Policy Support field in an SBC-REQ and a PKMv2 SA-TEK-Request messages.

Value		Description	Scope
Bit 0 / 4	Bit 1 / 5		
0	0	No Authorization (MS cannot support any authorization)	SBC-REQ, PKM-REQ
0	1	Only EAP-based authorization	
1	0	Only RSA-based authorization	
1	1	Only RSA-based authorization or Only EAP-based authorization or EAP-based authorization after RSA-based authorization	

The following table shows the bit representation of Bit 0–2 in Authorization Policy Support field in an SBC-RSP and a PKMv2 SA-TEK-Response messages.

Value		Description	Scope
Bit 0	Bit 1		
0	0	No Authorization	SBC-RSP, PKM-RSP
0	1	Only EAP-based authorization	
1	0	Only RSA-based authorization	
1	1	EAP-based authorization after RSA-based authorization	

If MS and BS decide "No authorization" as their authorization policy, the MS and BS shall perform neither SA-TEK handshake nor TEK exchange procedure.

11.8.4.3 MAC (message authentication code) mode

The MAC Mode field indicates a message authentication code mode that MS supports. Both MS and BS shall determine and use a message authentication code mode. A bit value of 0 indicates "not supported" while 1 indicates "supported." If this attribute is not present, only HMAC is supported.

Type	Length	Value
25.3	1	Bit 0: HMAC Bit 1: Reserved Bit 2: 64-bit short-HMAC[a] Bit 3: 80-bit short-HMAC[a] Bit 4: 96-bit short-HMAC[a] Bit 5: CMAC Bit 6–7: *Reserved.* Set to 0

[a]If the short-HMAC mode is selected, then the short-HMAC Tuple shall be applied to the following messages: MOB_SLP-REQ/RSP, MOB_SCN-REQ/RSP, MOB_MSHO-REQ, MOB_BSHO-REQ/RSP, MOB_HO-IND, RNG-REQ/RSP. Otherwise, the HMAC Tuple shall be applied.

The MS should support at least one message authentication code mode and inform BS of all supportable message authentication code modes by the SBC-REQ message. The BS negotiates the message authentication code mode. If all bits of this attribute included in the SBC-RSP message are 0, then no message authentication code is applied. Both the MS and the BS does not need to authenticate the MAC messages.

Short HMAC can be used only for HMAC is enabled.

11.8.4.4 PN window size

The PN Window Size field specifies the size capability of the receiver PN window for SAs and management connections. The receiver shall track PNs within this window to prevent replay attacks (see 7.5.1.2.4).

Type	Length	Value
25.4	2	PN Window Size in PNs

11.8.4.5 PKM flow control

This field specifies the maximum number of concurrent PKM transactions that may be outstanding.

Type	Length	Value	Scope
25.5	1	0 = No limit (default) 1–255 = Maximum concurrent transactions	SBC-REQ, SBC-RSP

11.8.4.6 Maximum number of supported security associations

This field specifies the maximum number of supported security association of the SS.

Type	Length	Value	Scope
25.6	1	Maximum number of security associations supported by the SS (default = 1)	SBC-REQ, SBC-RSP

11.8.5 Extended subheader capability

The Extension Capability field specifies extended subheader capability supports.

Type	Length	Value	Scope
27	1	Bit 0: Support extended subheader format Bit 1: PDU SN(short) extended subheader Bit 2: PDU SN(long) extended subheader Bits 3–7: Reserved	SBC-REQ, SBC-RSP

11.8.6 HO trigger metric support

The HO Trigger Metric Support field indicates trigger metrics that MS or BS supports. For each bit, a value of 0 indicates "not supported" while 1 indicates "supported."

Type	Length	Value	Scope
28	1	Bit 0: BS CINR mean Bit 1: BS RSSI mean Bit 2: Relative delay Bit 3: BS RTD Bit 4–7: *Reserved*; shall be set to zero	SBC-REQ, SBC-RSP

11.8.7 Association type support

The Association Type Support field indicates the association level supported by the MS or the BS.

Type	Length	Value	Scope
167	1	Bit 0: Scanning without Association: Association not supported Bit 1: Association level 0: Scanning or association without coordination. Bit 2: Association level 1: association with coordination. Bit 3: Association level 2: network assisted association. Bit 4: Directed association support. Bits 5–7: *Reserved*	SBC-REQ (see 6.3.2.3.23) SBC-RSP (see 6.3.2.3.24)

If a bit is set to 1, then MS or BS indicates support at the respective association type and level. The MS may associate according to arrangements by the BS at levels up to and including the one for which the MS has indicated support.

11.8.9 Service Information Query (SIQ)

Service Information Query is included by MS in SBC-REQ to request the Service Network Provider Identifier(s) supported by the Operator Network that includes the current BS.

Name	Type	Length	Value	Scope
SIQ	29	1	Bit 0: indicates that the SS requests transmittal of the NSP List TLV for the list of NSP IDs supported by the Operator Network that includes the current BS; Bit 1: indicates that the SS requests transmittal of the Verbose NSP Name List TLV, in addition to the NSP List TLV; bit 1 shall not be set to a value of '1' unless bit 0 is also set to a value of '1'; Bit 2–7: *Reserved*	SBC-REQ

11.8.10 MIH Capability Supported

The "MIH Capability Supported" TLV indicates if MIH Function is supported. MSs and BSs that support the MIHF shall identify themselves by including this TLV and setting at least bit 0 of its value field to 1. MSs and BSs that do not support the IEEE 802.21 MIHF shall not support the MOB_MIH-MSG management message. A BS may provide a network discovery query mechanism during network entry using MIH frames. A BS shall indicate support for this capability using bits 4 and 5.

Type	Length	Value	Scope
46	1	Indicates the capability of IEEE 802.21 Media Independent Handover Services. Each bit set to 1 indicates that the corresponding service is supported. — If bit 0 is set to 1 in the SBC-REQ/RSP message, the BS/MS is permitted to send MOB_MIH-MSG messages (see 6.3.2.3.57) as further indicated through bits 1–3. If bit 0 is set to 0, bits 1–3 shall be set to 0. — If bit 4 is set to be 1 in the SBC-RSP message, the MS is allowed to transmit an MIH information service request in an MIH Initial Service Request message (see 6.3.2.3.9). — When bit 5 is set to be 1 in the SBC-RSP message, the MS is allowed to transmit an MIH request for ES/CS Capability discovery in an MIH Initial Service Request message (see 6.3.2.3.9). Bit 0 = MIH (Media Independent Handover) support Bit 1 = Event Service support Bit 2 = Command Service support Bit 3 = Information Service support Bit 4 = Information Service support during network entry Bit 5 = ES/CS capability discovery support during network entry Bits 6–7: *Reserved*	SBC-REQ SBC-RSP

11.8.11 Visited NSP ID

When an MS attempts to connect to an operator network that is not the MS home network, and the roamed operator network has a relationship with the MS home network, and multiple Network Service Providers with differing AAA Services are available for authentication through the roamed operator network, the MS may include the Visited NSP ID in the SBC-REQ message to indicate to the roamed operator network which NSP the MS intends to be the conduit for authentication to the MS home network. If the BS requires the information provided by the Visited NSP ID in order to complete the initial network entry and the Visited NSP ID is not included in the SBC-REQ message, the BS may terminate the current attempt at initial network entry.

Name	Type	Length	Value	Scope
Visited NSP ID	180	3	NSP ID of the Network Service Provider the MS intends to be the conduit for authentication to the MS home network.	SBC-REQ

11.8.12 Auth Type for Single EAP

Auth Type for Single EAP identifies the authorization type used in initial network entry when the authorization method is single EAP. Auth Type for Single EAP identifies the authorization type as either device authorization or user authorization.

Name	Type	Length	Value	Scope
Auth Type for Single EAP	181	1	Auth Type for Single EAP shall only be included when bit 1 of MS Auth Policy support (see 11.8.4.2) has a value of '1'. Only one of the bit indicators, bit 0 or bit 1 of Auth Type for Single EAP, shall be set to a value of '1'. Bit 0: device authentication Bit 1: user authentication Bit 2–7: *Reserved*	SBC-REQ

11.8.13 Visited NSP Realm

When an MS attempts to connect to an operator network that is not the MS home network, and the roamed operator network has a relationship with the MS home network, and the MS authorization method is EAP, the BS may include the Visited NSP Realm in the SBC-RSP message to the MS to provide the realm of the AAA Services through which the MS intends to use to route the AAA messages for authentication to the MS home network. The MS may use the Visited NSP Realm to decorate an EAP NAI for the MS EAP transactions to its home network.

Name	Type	Length	Value	Scope
Visited NSP Realm	182	*variable*	Visited NSP Realm is a variable length string.	SBC-RSP

11.8.14 SII-ADV Message Pointer

When a BS elects to send information requested in an SBC-REQ message in an SII-ADV message rather than in the SBC-RSP message, this TLV is used to provide a pointer to the frame in which an SII-ADV message is transmitted.

Name	Type	Length	Value	Scope
SII-ADV Message Pointer	183	2	The 14 least significant bits of the frame number of the frame in which the SII-ADV message with requested information is transmitted. Bit 14–15: *Reserved*; shall be set to 0.	SBC-RSP

11.8.15 SDU MTU capability

The maximum MTU capability TLV specifies the upper bound for the SDU MTU size supportable on transport connections.

Name	Type	Length	Value	Scope
Maximum MTU capability	184	2	An unsigned 16 bit integer. When in SBC-REQ: The maximum SDU, in bytes, that the BS may send to the SS on transport connections. When in SBC-RSP: The maximum SDU, in bytes, that the SS may send to the BS or receive from the BS on transport connections.	SBC-REQ SBC-RSP

11.8.16 DL Coordinated Zone capability

The "DL coordinated zone capability" field indicates that MS can exploit the knowledge of interference if the zone is coordinated between BSs (i.e., the MS in the serving sector will experience interference from coordinated BS transmission that start from the same symbol, with the same zone type, and with the same pilot positions). This field is optional. A bit value of 0 indicates "not supported" while 1 indicates "supported."

Name	Type	Length	Value	Scope
DL Coordinated Zone Capability	186	1	Bit 0: Support DL coordinated zone for non-STC PUSC Bit 1: Support DL coordinated zone for STC PUSC Bit 2: Support DL coordinated zone for AMC Bit 3: Support DL coordinated zone for STC AMC Bits 4–7: *Reserved*	SBC-REQ

11.9 PKM-REQ/RSP management message encodings

A summary of the TLV encoding format is shown below. The fields are transmitted from left to right.

Type	Length	Value
1 byte	*variable*	Length bytes

The Type field is 1 byte. Values of the PKM Type field are specified in Table 592. Note that type values between 0 and 127 are defined within the PKM Specification, while values between 128 and 255 are vendor-assigned attribute types.

— A PKM server shall ignore attributes with an unknown type.
— A PKM client shall ignore attributes with an unknown type.

— PKM client and server (i.e., SS and BS) may log receipt of unknown attribute types.

The Length field indicates the length of this attribute's Value field, in bytes. The length field *does not include* the Type and Length fields.

The Value field is zero or more bytes and contains information specific to the attribute. The format and length of the Value field is determined by the Type and Length fields. The format of the Value field is one of the five data types shown in Table 593.

Table 592—PKM attribute types

Type	PKM attribute
0–5	*reserved*
6	Display-String
7	AUTH-Key
8	TEK
9	Key-Lifetime
10	Key-Sequence-Number
11	HMAC-Digest
12	SAID
13	TEK-Parameters
14	*Reserved*
15	CBC-IV
16	Error-Code
17	CA-Certificate
18	SS-Certificate
19	Security-Capabilities
20	Cryptographic-Suite
21	Cryptographic-Suite-List
22	*Reserved*
23	SA-Descriptor
24	SA-Type
25	*Reserved*
26	*Reserved*
27	PKM Configuration Settings
28	EAP Payload
29	Nonce
30	Auth result code
31	SA service type

Table 592—PKM attribute types *(continued)*

Type	PKM attribute
32	Frame number
33	SS RANDOM
34	BS RANDOM
35	Encrypted pre-PAK
36	*Reserved*
37	BS-Certificate
38	SigBS
39	MS-MAC Address
40	CMAC Digest
41	Key push modes
42	Key push counter
43	GKEK
44	SigSS
45	Authorized key identifier (AKID)
46	Associated GKEK Sequence Number
47	GKEK-Parameters
48	MIH Cycle
49	MIH Delivery Method and Status Code
50–255	*Reserved*

Table 593—Attribute value data types

Data type	Structure
string	0–*n* bytes
uint8	8-bit unsigned integer
uint16	16-bit unsigned integer
uint32	32-bit unsigned integer
compound	Collection of attributes

11.9.1 Display string

The Display-String attribute contains a textual message. It is typically used to explain a failure response and might be logged by the receiver for later retrieval by an SNMP manager. Display strings shall be no longer

than 128 bytes. A summary of the Display-String attribute format is shown below. The fields are transmitted from left to right.

Type	Length	Value (string)
6	> 0 and ≤ 128	A string of characters. The character string shall be null-terminated.

11.9.2 AUTH-Key

The AK (AUTH-Key) is a 20 byte quantity, from which a KEK, and two message authentication keys (one for UL requests, and a second for DL replies) are derived. This attribute contains a 128 byte quantity containing the AK RSA-encrypted with the SS's 1024 bit RSA public key. Details of the RSA encryption procedure are given in 7.5. The ciphertext produced by the RSA algorithm shall be the length of the RSA modulus, i.e., 128 bytes.

Type	Length	Value (string)
7	128	128-byte quantity representing an RSA-encrypted AK.

11.9.3 TEK

The TEK attribute contains a quantity that is a TEK key, encrypted with a KEK derived from the AK.

Type	Length	Value (string)
8	8 16 24 128	Encrypted TEK for DES Encrypted TEK for AES Encrypted TEK for AES key wrap Encrypted TEK for RSA

When the TEK encryption algorithm identifier in the SA is 0x01, the length shall be 8, and the TEK shall be encrypted with 3DES in EDE mode according to the procedure defined in 7.5.2.1.

When the TEK encryption algorithm identifier in the SA is 0x03, the length shall be 16, and the TEK shall be encrypted with AES in ECB mode according to the procedure in 7.5.2.3.

When the TEK encryption algorithm identifier in the SA is 0x04, the length shall be 24, and the TEK shall be encrypted with the AES key wrap algorithm according to the procedure in 7.5.2.4.

Table 594 shows all the TEK encryption algorithm indentifiers.

Table 594—TEK encryption algorithm identifiers

Value	Description
0	*Reserved*
1	3-DES EDE with 128-bit key
2	RSA with 1024-bit key
3	ECB mode AES with 128-bit key
4	AES key wrap with 128-bit key
5–255	*Reserved*

11.9.4 Key lifetime

The Key-Lifetime attribute contains the lifetime, in seconds, of an AK, a TEK, a PAK, or a PMK. It is a 32-bit unsigned quantity representing the number of remaining seconds for which the associated key shall be valid. Note that this attribute can be used as a single TLV or as part of a compound TLV.

Type	Length	Value (uint32)
9	4	32-bit quantity representing key lifetime. A key lifetime of zero indicates that the corresponding key is not valid.

11.9.5 Key sequence number

The Key-Sequence-Number attribute contains sequence number for a TEK, an AK, a PAK, or a PMK. The 2-bit or 4-bit quantity, however, is stored in a single byte, with the high-order 6 or 4 bits set to 0. A summary of the Key-Sequence-Number attribute format is shown below. Note that this attribute can be used as a single TLV or as part of a compound TLV.

Type	Length	Value (uint8)
10	1	2-bit sequence number (TEK, GTEK) 4-bit sequence number (AK, PAK, PMK, GKEK)

11.9.6 HMAC digest

The HMAC-Digest attribute contains a keyed hash used for message authentication. The HMAC algorithm is defined in IETF RFC 2104.

Type	Length	Value (string)
11	20 bytes	A 160-bit (20 byte) keyed SHA hash

11.9.6.1 Short-HMAC digest

The Short-HMAC-Digest attribute contains the highest order bytes of the keyed hash used for message authentication. The HMAC algorithm is defined in IETF RFC 2104. The 20-byte HMAC result is truncated to the length indicated by the BS in the Short-HMAC Digest Length parameter (see 11.1.2.3) or to 10 bytes if the Short-HMAC Digest Length parameter was not specified.

Type	Length	Value (uint16)
11	*variable* (8, 10, or 12 bytes as described in 11.1.2.3)	The highest order bytes of the truncated HMAC-SHA1 keyed hash

11.9.7 SAID

The SAID attribute contains a 16-bit SAID used by the Privacy Protocol to identify the SA. The SAID for the multicast service or the broadcast service is the GSAID. Null SAID shall be used when "No authorization" is applied. The value of Null SAID is 0xffff. When allocating SAID during handover re-entry, target BS should assign the same SAIDs which were used in serving BS and each newly assigned SAID shall match the cryptographic suite that was used in serving BS.

Type	Length	Value (uint16)
12	2	16-bit quantity representing an SAID

11.9.8 TEK parameters

The TEK-Parameters attribute is a compound attribute, consisting of a collection of subattributes. These subattributes represent all security parameters relevant to a particular generation of an SAID's TEK. A summary of the TEK-Parameters attribute format is shown below. The GTEK and GKEK are defined only for the multicast service or the broadcast service. The GTEK is the TEK for the multicast service or the broadcast service.

Type	Length	Value (compound)
13	*variable*	The Compound field contains the subattributes as defined in Table 595

Table 595—TEK-Parameters subattributes

Attribute	Contents
TEK	TEK, encrypted with the negotiated TEK encryption algorithm GTEK, encrypted with the GKEK
Key-Lifetime	TEK remaining lifetime
Key-Sequence-Number	TEK sequence number
CBC-IV	Cipher block chaining initialization vector
Associated GKEK Sequence Number	Associated GKEK sequence number with this TEK-Parameters

The CBC-IV attribute is required when the data encryption algorithm identifier in the SA ciphersuite is 0x01 (DES in CBC mode).

The CBC-IV attribute is not required when the data encryption algorithm identifier in the SA ciphersuite is 0x02 (AES).

The CBC-IV attribute is required when the data encryption algorithm identifier in the SA ciphersuite is 0x03 (AES in CBC mode).

11.9.9 CBC-IV attribute

The CBC-IV attribute contains a value specifying a CBC IV. A summary of the CBC-IV attribute format is shown below. The fields are transmitted from left to right.

Type	Length	Value (string)
15	Equal to Block length of cipher	CBC-IV

11.9.10 Error code

The Error-Code attribute contains a 1-byte error code providing further information about an Authorization Reject, Key Reject, Authorization Invalid, or TEK Invalid. A summary of the Error-Code attribute format is shown below. Table 596 lists code values for use with this attribute. The BS may employ the nonzero error codes (1–6) listed below; it may, however, return a code value of zero (0). Error code values other than those defined in Table 596 shall be ignored. Returning a code value of zero sends no additional failure information to the SS; for security reasons, this may be desirable.

Type	Length	Value (uint8)	Scope
16	1	Error-Code	Authorization Reject, Authorization Invalid, Key Reject, TEK Invalid

Table 596—Error-code attribute code values

Error code	Messages	Description
0	All	No information
1	Auth Reject, Auth Invalid	Unauthorized SS
2	Auth Reject, Key Reject	Unauthorized SAID
3	Auth Invalid	Unsolicited
4	Auth Invalid, TEK Invalid	Invalid Key Sequence Number
5	Auth Invalid	Message (Key Request) authentication failure
6	Auth Reject	Permanent Authorization Failure

Error Code 6 (Permanent Authorization Failure) is used to indicate a number of different error conditions affecting the PKM authorization exchange. These include the following:

a) An unknown manufacturer; i.e., the BS does not have the CA certificate belonging to the issuer of an SS certificate
b) SS certificate has an invalid signature
c) ASN.1 parsing failure during verification of SS certificate
d) SS certificate is on the “hot list”
e) Inconsistencies between certificate data and data in accompanying PKM attributes
f) SS and BS have incompatible security capabilities

The common property of these error conditions is that the failure condition is considered permanent; any reattempts at authorization would continue to result in Authorization Rejects. Details about the cause of a Permanent Authorization Failure may be reported to the SS in an optional Display-String attribute that may accompany the Error-Code attribute in Authorization Reject messages. Note that providing this additional detail to the SS should be administratively controlled within the BS. The BS may log these Authorization failures, or even trap them to an SNMP manager.

11.9.11 CA certificate

The CA-Certificate attribute is a string attribute containing an X.509 CA Certificate, as defined in 7.6. A summary of the CA-Certificate attribute format is shown below. The fields are transmitted from left to right.

Type	Length	Value (string)
17	*variable*. Length shall not cause resulting MAC management message to exceed the maximum allowed size.	X.509 CA Certificate (DER-encoded ASN.1)

11.9.12 SS certificate

The SS-Certificate attribute is a string attribute containing an SS's X.509 User Certificate, as defined in 7.6. A summary of the SS-Certificate attribute format is shown below. The fields are transmitted from left to right.

Type	Length	Value (string)
18	*variable*. Length shall not cause resulting MAC management message to exceed the maximum allowed size.	X.509 SS Certificate (DER-encoded ASN.1)

11.9.13 Security capabilities

The Security-Capabilities attribute contains the cryptographic suite(s) an SS supports.

Type	Length	Value (compound)
19	*variable*	The Compound field contains the subattributes as defined in Table 597

Table 597—Security-capabilities subattributes

Attribute	Contents
Cryptographic-Suite-List	List of supported cryptographic suites

11.9.14 Cryptographic suite

The following TLV and Table 598, Table 599, Table 600, and Table 601 define encodings for supported cryptographic suites

Type	Length	Value (uint8,uint8,uint8)
20	3	A 24-bit integer identifying the cryptographic suite properties. The most significant byte, as defined in Table 598, indicates the encryption algorithm and key length. The middle byte, as defined in Table 599 indicates the data authentication algorithm. The least significant byte, as defined in Table 600, indicates the TEK Encryption Algorithm.

Table 598—Data encryption algorithm identifiers

Value	Description
0	No data encryption
1	CBC mode, 56-bit DES
2	CCM mode, 128-bit AES
3	CBC mode, 128-bit AES
4–127	*Reserved*
128	CTR mode, 128-bit AES for MBS with 8-bit ROC
129–255	*Reserved*

Table 599—Data authentication algorithm identifiers

Value	Description
0	No data authentication
1	CCM mode, 128-bit AES
2–255	*Reserved*

Table 600—TEK encryption algorithm identifiers

Value	Description
0	*Reserved*
1	3-DES EDE with 128-bit key
2	RSA with 1024-bit key
3	ECB mode AES with 128-bit key
4	AES key wrap with 128-bit key
5–255	*Reserved*

The allowed cryptographic suites are itemized in Table 601.

Table 601—Allowed cryptographic suites

Value	Description
0x000000	No data encryption, no data authentication, no key encryption
0x010001	CBC mode 56-bit DES, no data authentication and 3-DES,128
0x000002	No data encryption, no data authentication and RSA, 1024
0x010002	CBC mode 56-bit DES, no data authentication and RSA, 1024
0x020003	CCM mode AES, no data authentication and AES, 128
0x020103	CCM mode 128-bit AES, CCM mode, 128-bit, ECB mode AES with 128-bit key
0x020104	CCM mode 128bits AES, CCM mode, AES key wrap with 128-bit key
0x030003	CBC mode 128-bit AES, no data authentication, ECB mode AES with 128-bit key
0x800003	MBS CTR mode 128 bits AES, no data authentication, AES ECB mode with 128-bit key
0x800004	MBS CTR mode 128 bits AES, no data authentication, AES key wrap with 128-bit key
All remaining values	*Reserved*

11.9.15 Cryptographic-Suite-List parameter

The Cryptographic-Suite-List parameter contains a list of supported cryptographic suites.

Type	Length	Value (compound)
21	$5 \times n$, where n equals number of cryptographic suites listed	A list of cryptographic suites

11.9.16 SA-Descriptor attributer

The SA-Descriptor attribute is a compound attribute whose subattributes describe the properties of a security association (SA). These properties include the SAID, the SA type, the SA service type, and the cryptographic suite employed within the SA.

Type	Length	Value (compound)
23	*variable*	The Compound field contains the subattributes shown in Table 602

Table 602—SA-Descriptor subattributes

Attribute	Contents
SAID	Security association identifier.
SA-Type	Type of security association.
SA Service Type	Service type of the corresponding security association type. This shall be defined only when SA type is Static SA or Dynamic SA.
Cryptographic-Suite	Cryptographic suite employed within the SA.

11.9.17 SA-Type attribute

The SA-Type attribute identifies the type of SA. Privacy defines three SA types: Primary, Static, Dynamic.

Type	Length	Value (uint8)
24	1	A 1-byte code identifying the value of SA type as defined in Table 603

Table 603—SA-type attribute values

Value	Description
0	Primary
1	Static
2	Dynamic
3–127	*Reserved*
128–255	Vendor-specific

11.9.18 PKM Configuration Settings field

The PKM Configuration Settings field defines the parameters associated with PKM operation. It is composed of a number of encapsulated TLV fields.

Type	Length	Value (compound)	Scope
27	*variable*	Compound	Auth Reply, PMKv2-RSA reply, PKMv2-SA-TEK response

11.9.18.1 Authorize Wait Timeout field

The value of the Authorize Wait Timeout field specifies retransmission interval, in seconds, of Authorization Request messages from the Authorize Wait state.

Type	Length	Value
27.1	4	Authorize Wait Timeout in seconds

11.9.18.2 Reauthorize Wait Timeout field

The value of the Reauthorize Wait Timeout field specifies retransmission interval, in seconds, of Authorization Request messages from Reauthorize Wait state.

Type	Length	Value
27.2	4	Reauthorize Wait Timeout in seconds

11.9.18.3 Authorization Grace Time field

The value of the Authorization Grace Time field specifies the grace period for reauthorization, in seconds.

Type	Length	Value
27.3	4	Authorization Grace Time in seconds

11.9.18.4 Operational Wait Timeout field

The value of the Operational Wait Timeout field specifies the retransmission interval, in seconds, of Key Requests from the Operational Wait state.

Type	Length	Value
27.4	4	Operational Wait Timeout in seconds

11.9.18.5 Rekey Wait Timeout field

The value of the Rekey Wait Timeout field specifies the retransmission interval, in seconds, of Key Requests from the Rekey Wait state.

Type	Length	Value
27.5	4	Rekey Wait Timeout in seconds

11.9.18.6 TEK Grace Time field

The value of the TEK Grace Time field specifies grace period, in seconds, for rekeying the TEK.

Type	Length	Value
27.6	4	TEK Grace time in seconds

11.9.18.7 Authorize Reject Wait Timeout field

The value of the Authorize Reject Wait Timeout field specifies how long (in seconds) an SS waits in the Authorize Reject Wait state after receiving an Authorization Reject.

Type	Length	Value
27.7	4	Authorize Reject Wait Timeout in seconds

11.9.19 Nonce attribute

The Nonce attribute contains a quantity used to protect message exchanges from Replay Attack. As always, values for nonces should be generated using reliable random or pseudo-random generators.

Type	Length	Value (string)
29	4	Randomly generated value

11.9.20 SS_RANDOM attribute

The SS_RANDOM attribute contains a quantity that is pseudo random number generated from the MS and used as fresh number for mutual authorization message handshake.

Type	Length	Value
33	8	MS-generated random number

11.9.21 BS_RANDOM attribute

The BS_RANDOM attribute contains a quantity that is pseudo random number generated from the BS and used as fresh number for mutual authorization message handshake.

Type	Length	Value
34	8	BS-generated random number

11.9.22 Encrypted Pre-PAK attribute

This pre-primary authorization key (PAK) is a 256 bit quantity, from which an AK, a KEK, two MAC message authentication keys, and two EAP message protection keys are derived. This attribute contains a 128 byte quantity containing the PAK RSA-encrypted with the MS's 1024-bit RSA public key. Details of the RSA encryption procedure are given in 7.2.2.2. The ciphertext produced by the RSA algorithm shall be the length of the RSA modulus, i.e., 128 bytes.

Type	Length	Value
35	128	128-byte quantity representing an RSA-encrypted pre-PAK, which generates PAK

11.9.23 BS-Certificate attribute

The BS-Certificate attribute is a string attribute containing an X.509 BS Certificate, as defined in 7.1.3.1. A summary of the BS-Certificate attribute format is shown below. The fields are transmitted from left to right.

Type	Length	Value
37	*variable* Length shall not cause resulting MAC management message to exceed the maximum allowed size.	X.509 BS Certificate (DER-encoded ASN.1)

11.9.24 SigBS attribute

The SigBS attribute contains a RSA signature computed over the PKMv2 RSA Reply message or the PKMv2 RSA Reject message with the BS's private key.

Type	Length	Value
38	128	An RSA signature computed over all attributes included in the PKMv2 RSA Reply message or the PKMv2 RSA Reject message with the BS's private key. This value is calculated using PKCS #1 OAEP 1.5 signing algorithm with SHA-1 hash.

11.9.25 MS-MAC Address attribute

The MS-MAC Address attribute is the MAC address of MS.

Type	Length	Value
39	6	The MAC address of the MS

11.9.26 CMAC Digest attribute

The CMAC Digest attribute contains a PN counter, CMAC_PN_*, incremented per packet on each direction and the Message Authentication Code value used for message authentication. The CMAC algorithm is defined in NIST Special Publication 800-38B.

The CMAC Digest includes the following:

Type	Length	Value
40	12	See that follows

Field	Length (bits)	Note
CMAC Packet Number Counter, CMAC_PN_*	32	This context is different in UL and DL.
CMAC Value	64	CMAC with AES-128.

11.9.27 Key push modes

The Key Push Modes field is used to distinguish usage code of a PKMv2 Group-Key-Update-Command message.

Type	Length	Value
41	1	0: GKEK update mode 1: GTEK update mode 2–255: *Reserved*

A PKMv2 Group-Key-Update-Command message for the GKEK update mode is to distribute new GKEK to each SS carried on the primary management connection. The BS transmits this message before the M&B TEK Grace Time starts.

A PKMv2 Group-Key-Update-Command message for the GTEK update mode is to distribute new GTEK to all SS carried on the broadcast connection. The BS transmits this message after the M&B TEK Grace Time starts.

Attributes of a PKMv2 Group-Key-Update-Command message are different according to the value of the Key Push Modes as shown in the following table.

Attribute	GKEK update mode	GTEK update mode
Key-Sequence-Number	AK Sequence Number	GKEK Sequence Number
GSAID	Yes	Yes
Key Push Modes	Yes	Yes

Attribute	GKEK update mode	GTEK update mode
Key Push Counter	Yes	Yes
GTEK-Parameters	No	Yes
GKEK-Parameters	Yes	No
HMAC/CMAC-Digest	Yes	Yes

Key-Sequence-Number, GSAID, Key Push Modes, and HMAC/CMAC-Digest fields are included in two PKMv2 Group-Key-Update-Command message regardless of the value of the Key Push Modes.

GKEK-Parameters attribute should be included in a PKMv2 Group-Key-Update-Command message for the GKEK update mode. And GTEK-Parameters attribute should be included in that message for the GTEK update mode.

The CBC-IV attribute can be included only when the TEK encryption algorithm identifier in the cryptographic suite equal to 0x01.

One of HMAC Digest or CMAC Digest shall be used to authenticate the Key Update Command messages.

11.9.28 Key push counter

The Key Push Counter field is used to protect for replay attack. This value is one greater than (modulo 65536) that of older generation.

Type	Length	Value
42	2	16-bit counter

11.9.29 GKEK

The 128-bit GKEK may be randomly generated in a BS or an ASA server. The GKEK field is used to encrypt the GTEK for the multicast service or the broadcast service.

Type	Length	Value
43	16	GKEK, encrypted with the KEK derived from AK

11.9.30 SigSS

The SigSS attribute contains an RSA signature computed over the PKMv2 RSA Request message or the PKMv2 RSA Acknowledgement message with the SS's private key.

Type	Length	Value
44	128	An RSA signature computed over all attributes included in the PKMv2 RSA Request message or the PKMv2 RSA Acknowledgement message with the SS's private key. This value is calculated using RSASSA-PKCS-v1_5-Sign algorithm with SHA-1 hash.

11.9.31 Authorization key identifier (AKID)

The AKID attribute identifies the AK as defined in Table 202.

Type	Length	Value
45	8	AKID as defined in Table 202

11.9.32 EAP payload

The EAP-Payload attribute contains the payload used in the upper EAP authorization layer. The security sublayer does not interpret this attribute.

Type	Length	Value
28	*variable*	EAP payload

11.9.33 Auth result code

The Auth-Result-Code attribute contains the result code of the RSA-based authorization (only for PKMv2).

Type	Length	Value
30	1	0: Success 1: Reject 2–255: *Reserved*.

11.9.34 SA service type

The SA-Service-Type attribute indicates service types of the corresponding SA type. This attribute shall be defined only when the SA type is Static SA or Dynamic SA. The GTEK shall be used to encrypt connection for group multicast service. The MTK shall be used to encrypt connection for MBS service.

Type	Length	Value
31	1	0: Unicast service 1: Group multicast service 2: MBS service 3–255: *Reserved*

11.9.35 Frame number

The Frame-Number attribute contains a 24-bit absolute frame number in which the old PMK and all its associate AKs should be discarded. The value is in MSB first order.

Type	Length	Value
32	3	24-bit Frame Number in MSB first order

11.9.36 Associated GKEK Sequence Number

This attribute indicates the GKEK Sequence Number of a GKEK-Parameters attribute under the same GSAID. When a BS transfers the GTEK, BS shall encrypt the GTEK using the GKEK corresponding to the Associated GKEK Sequence Number.

Type	Length	Value (Compound)
46	1	Associated GKEK sequence number

11.9.37 GKEK-Parameters

This attribute is a compound attribute, consisting of a collection of subattributes. These subattributes represent all the security parameters relevant to a particular generation of a GSAID for encrypting the GTEK in the multicast or broadcast service. A summary of the GKEK-Parameters attribute format is shown below.

Type	Length	Value (Compound)
47	*variable*	The Compound field contains the subattributes as defined in the following table.

Table 604—GKEK Parameters subattributes

Attributes	Contents
GKEK	Group Key Encryption Key, encrypted with KEK derived from AK
Key-Lifetime	GKEK's remaining lifetime
Key-Sequence-Number	GKEK's sequence number

The GKEK lifetime should be made by *n* times the GTEK lifetime as follows.

$$\text{GKEK lifetime} = n \times \text{GTEK lifetime}$$

where *n* is an integer (more than 1).

11.9.38 MIH Cycle

This TLV includes the 8 LSB of the absolute frame number of the first frame where the MIH response is expected to be ready for transmittal to the MS, and the interval between subsequent frames where the MIH response may be transmitted (refer to 6.3.24).

Type	Length	Value	Scope
48	2	Bit 8–15: Specify the 8 LSB of the absolute frame number when the BS may indicate that the MIH response is ready to be delivered to the MS by allocating bandwidth for the MS in the UL-MAP, if it is unicasting the MIH response, or when the BS may send an SII-ADV message including the MIH response (refer to 6.3.24), if the BS is broadcasting the MIH response. Bit 0–7: Specify the MIH Cycle Offset. The MIH Cycle Offset is used to indicate subsequent frames when the BS may allocate bandwidth for the MS in the UL-MAP or send an SII-ADV message including the MIH response. The subsequent frames are calculated by adding multiples of the MIH Cycle Offset to the original absolute frame number transmission opportunity.	PKM-RSP

11.9.39 MIH Delivery Method and Status Code

This TLV is used by the MS and BS to negotiate a preferred delivery method (broadcast or unicast). Only the BS may transmit a Status Code value different from 0x00 (Null).

Type	Length	Value	Scope
49	1	Bit 0: Unicast Bit 1: Broadcast Bit 2–6: Status code 0x00: Null 0x01: Requested information is not available. 0x02–0x1F: *Reserved* Bit 7: *Reserved*	PKM-REQ PKM-RSP

11.10 MCA-REQ management message encodings

The type values used shall be those defined in Table 605.

Table 605—Multicast assignment request message encodings

Name	Type (1 byte)	Length	Value (variable-length)
Multicast CID	1	2	
Assignment	2	1	0x00 = Leave multicast group 0x01 = Join multicast group
Multicast group type	3	1	0 = Regular (not AAS), default 1 = AAS
Periodic allocation parameters	4	4	Bit 0–7 = *m* Bit 8–15 = *k* Bit 16–23 = *n* Bit 24–31 = *Reserved*; shall be set to zero
Periodic allocation type	5	1	0 = REQ region Full 1 = REQ region Focused Applicable for OFDM PHY only.
Operation	6	1	0 = Allocate 1 = Deallocate
Reserved	7–255		Reserved for future use

Parameters *m, k* have the following meaning: multicast group gets a multicast polling allocation at the end of the frame #*N* if *N* mod *k* = *m*; size of the allocation is *n*.

11.11 REP-REQ management message encodings

Name	Type	Length	Value
Report request	1	*variable*	Compound

The Report Command consists of the following parameters:

Name	Type	Length	Value
Report type	1.1	1	Bit 0: 1 = Include DFS Basic report. Bit 1: 1 = Include CINR report. Bit 2: 1 = Include RSSI report. Bits 3–6: α_{avg} \ in multiples of 1/32 (range [1/32, 16/32]). Bit 7: 1 = Include current Tx power report.

Name	Type	Length	Value
Channel number	1.2	1	Physical channel number (see 8.5.1) to be reported on. (license-exempt bands only)
Channel Type request	1.3	1	00: Normal subchannel. 01: Band AMC channel. 10: Safety channel. 11: Sounding.
Zone-specific physical CINR request	1.4	3	Bits 0–2: Type of zone on which CINR is to be reported: 0b000: PUSC zone with Use All SC=0. 0b001: PUSC zone with Use All SC=1 / PUSC AAS zone. 0b010: FUSC zone. 0b011: Optional FUSC zone. 0b100: Safety channel region. 0b101: AMC zone for DL AAS zone or AMC Zone with dedicated pilots) 0b110–0b111: *Reserved.* Bit 3: 1: Zone for which CINR should be estimated is STC zone. 0: Otherwise. Bit 4: 1: Zone for which CINR should be estimated is AAS zone or zone with dedicated pilots. 0: Otherwise. Bits 5–6: PRBS_ID of the zone for which CINR should be estimated or the Segment number as indicated by the frame preamble for the first DL Zone or DL AAS zone with Diversity_Map support. Ignored for safety channel. Bit 7: Data/pilot-based CINR measurement: 0: Report the CINR estimate from pilot subcarriers. 1: Report the CINR estimate from data subcarriers. Bits 8–13: Reported CINR shall be estimated only for the subchannels of PUSC major groups for which the corresponding bit is set. Bit (k+7) refers to major group k. Only applicable for CINR measurement on a PUSC zone. Bits 14–17: α_{avg} in multiples of 1/16 (range is [1/16,16/16]). Bit 18: 0: Report only mean of CINR. 1: Report both mean and standard deviation of CINR. Bits 19–23: *Reserved*; shall be set to zero.
Preamble physical CINR request	1.5	1	Bits 0–1: Type of preamble physical CINR measurement: 0b00: Report the estimation of CINR measured from preamble for frequency reuse configuration = 1. 0b01: Report the estimation of CINR measured from preamble for frequency reuse configuration = 3. 0b10: Report the estimation of CINR measured from preamble for band AMC. 0b11: *Reserved.* Bits 2–5: α_{avg} in multiples of 1/16 (range is [1/16,16/16]). Bit 6: 0: Report only mean of CINR. 1: Report both mean and standard deviation of CINR. Bit 7: *Reserved*; shall be set to zero.

Name	Type	Length	Value
Zone-specific effective CINR request	1.6	2	Bits 0–2: Type of zone on which effective CINR is to be reported: 0b000: PUSC zone with Use All SC = 0. 0b001: PUSC zone with Use All SC = 1 / PUSC AAS zone. 0b010: FUSC zone. 0b011: Optional FUSC zone. 0b100: *Reserved*. 0b101: AMC zone (for DL AAS zone or AMC Zone with dedicated pilots) 0b110–0b111: *Reserved.* Bit 3: 1: Zone for which effective CINR should be reported is STC zone. 0: Otherwise. Bit 4: 1: Zone for which effective CINR should be estimated is AAS zone or zone with dedicated pilots. 0: Otherwise. Bits 5–6: PRBS_ID of the zone for which effective CINR should be reported. Ignored for Safety Channel. Bit 7: Data/pilot-based effective CINR measurement: 0: Report the CINR estimate from pilot subcarriers. 1: Report the CINR estimate from data subcarriers. Bits 8–13: Reported effective CINR shall only be estimated for the subchannels of PUSC major groups for which the corresponding bit is set. Bit (k+7) refers to major group k. Only applicable for CINR measurement on a PUSC zone. Bits 14–15: *Reserved*; shall be set to zero.
Preamble effective CINR request	1.7	1	Bits 0–1: Type of preamble-based effective CINR measurement: 0b00: Report the estimation of effective CINR measured from preamble for frequency reuse configuration = 1. 0b01: Report the estimation of effective CINR measured from preamble for frequency reuse configuration = 3. 0b10–0b11: *Reserved.* Bits 2–7: *Reserved*; shall be set to zero.
Channel selectivity report	1.8	1	Bit 0: 1 = Include frequency selectivity report. Bits 1–7: *Reserved*; shall be set to zero.
Midamble Physical CINR request	1.9	1	Midamble Physical CINR request is used with Channel Type Request = 0b01 (band AMC) to report CINR on the midamble. Bits 0–3: α_{avg} in multiples of 1/16 (range is [1/16, 16/16]). Bit 4: 0: Report only mean of CINR. 1: Report both mean and standard deviation of CINR. Bit 5–6 0b00: report CINR assuming 1 stream 0b01: report CINR assuming 2 streams 0b10: report CINR using number of streams determined by MS 0b11: reserved Bits 7: reserved; shall be set to zero.

Measurements according to Zone-specific physical CINR request TLV (1.4) and Preamble physical CINR request TLV (1.5) and Midable physical CINR request TLV (1.9) shall use the α_{avg} specified in these TLVs regardless of the value of the α_{avg} in Report Type TLV (1.1).

11.12 REP-RSP management message encodings

Name	Type	Length	Value
Report	1	*variable*	Compound
Channel Type Report in WirelessMAN OFDMA PHY	2	*variable*	Compound
Current transmitted power	147	1	See 8.3.7.4 and 11.1.1

The report consists of the following parameters (see also 8.3.9 or 8.4.12 for details).

REP-REQ report type	Name	Type	Length	Value
Bit 0 = 1	Channel number	1.1	1	Physical channel number (see 8.5.1) to be reported on
Bit 0 = 1	Start frame	1.2	2	16 LSBs of frame number in which measurement for this channel started
Bit 0 = 1	Duration	1.3	3	Cumulative measurement duration on the channel in multiples of T_S. For any value exceeding 0xFFFFFF, report 0xFFFFFF
Bit 0 = 1	Basic report	1.4	1	Bit 0: WirelessHUMAN detected on the channel Bit 1: Unknown transmissions detected on the channel Bit 2: Specific spectrum user detected on the channel Bit 3: Unmeasured. Channel not measured
Bit 1 = 1	CINR report	1.5	2	Bit 15–Bit 8: mean (see also 8.3.9, 8.4.12) for details) Bit 7–Bit 0: standard deviation
Bit 2 = 1	RSSI report	1.6	2	Bit 15–Bit 8: mean (see also 8.3.9, 8.4.12) for details) Bit 7–Bit 0: standard deviation

REP-REQ channel type request	Name	Type	Length	Value
Channel Type = 00	Normal Sub-channel Report	2.1	1	5 LSBs CINR measurement report. The rest of the bits are reserved (set to zero).
Channel Type = 01	Band AMC Report	2.2	4	Bit 31–Bit 20: Band Indication Bitmap (Bit 31 for Band with index 11, Bit 30 for Band with index 10, ... Bit 20 for Band with index 0) Bit 19–Bit 0: CINR reports for 4 selected Bands. (5 bits per each band. Band with lower index has lower significant 5 bits)
Channel Type = 01	Enhanced Band AMC Report	2.4	5	Bit 39–Bit 28: Band Indication Bitmap (Bit 39 for Band with index 11, Bit 38 for Band with index 10 ... Bit 28 for Band with index 0) Bit 27–Bit 3: CINR reports for 5 selected Bands. (5 bits per each band. Band with lower index has lower significant 5 bits) Bit 2–Bit 0: Reserved
Channel Type = 10	Safety Channel Report	2.3	5	Bit 39–Bit 20: Reported Bin Indication Bitmap (Bit 39 for Bin with index 19, Bit 38 for Bin with index 18 ... Bit 20 for Bin with index 0) Bit 19–Bit 0: CINR reports for 4 selected Bins. (5 bits per each bin. Bin with lower index has lower significant 5 bits)
Channel Type = 11	Sounding Report	2.5	1	Average SINR. 8 bits in the same format used in 8.4.12.3.

For REP-REQ Channel Type request type 1.3, with value 0b01 = Band AMC Channel, enhanced CQICH enabled MS shall report with type 2.4; otherwise, SS and MS shall report with type 2.2.

REP-REQ Zone-specific physical CINR request	Name	Type	Length	Value
Bits 0–2 = 0b000	PUSC zone with Use All SC = 0	2.6	1 or 2	Bits 0–4: Mean of physical CINR estimate for PUSC zone with Use All SC = 0 and PRBS_ID indicated in Zone-Specific Physical CINR Request. Bit 5: Report type: 0: CINR estimated from pilot subcarriers. 1: CINR estimated from data subcarriers. Bits 6–7: *Reserved*; shall be set to zero. Bits 8–12: Standard deviation of CINR estimate for PUSC zone with Use All SC = 0 and PRBS_ID indicated in Zone-Specific CINR Request. Bits 13–15: *Reserved*; shall be set to zero. NOTE—Bits 15–8 shall only be sent if length = 2.
Bits 0–2 = 0b001	PUSC zone with Use All SC = 1	2.7	1 or 2	Bits 0–4: Mean of physical CINR estimate for PUSC zone with Use All SC = 1 and PRBS_ID indicated in Zone-Specific Physical CINR Request. CINR reported corresponds to a subset of major groups as specified in CINR Type Request. Bit 5: Report type: 0: CINR estimated from pilot subcarriers. 1: CINR estimated from data subcarriers. Bits 6–7: *Reserved*; shall be set to zero. Bits 8–12: Standard deviation of CINR estimate for PUSC zone with Use All SC = 1 and PRBS_ID indicated in Zone-Specific CINR Request. CINR reported corresponds to a subset of major groups as specified in CINR Type Request. Bits 13–15: *Reserved*; shall be set to zero. NOTE—Bits 15–8 shall only be sent if length = 2.
Bits 0–2 = 0b010	FUSC zone	2.8	1 or 2	Bits 0–4: Mean of physical CINR estimate for FUSC zone with PRBS_ID indicated in Zone-Specific Physical CINR Request. Bit 5: Report type: 0: CINR estimated from pilot subcarriers. 1: CINR estimated from data subcarriers. Bits 6–7: *Reserved*; shall be set to zero. Bits 8–12: Standard deviation of CINR estimate for FUSC zone with PRBS_ID indicated in Zone-Specific CINR Request. Bits 13–15: *Reserved*; shall be set to zero. NOTE—Bits 15–8 shall only be sent if length = 2.

REP-REQ Zone-specific physical CINR request	Name	Type	Length	Value
Bits 0–2 = 0b011	Optional FUSC zone	2.9	1 or 2	Bits 0–4: Mean of physical CINR estimate for Optional FUSC with PRBS_ID indicated in Zone-Specific Physical CINR Request. Bit 5: Report type: 0: CINR estimated from pilot subcarriers. 1: CINR estimated from data subcarriers. Bits 6–7: *Reserved*; shall be set to zero. Bits 8–12: Standard deviation of CINR estimate for Optional FUSC with PRBS_ID indicated in Zone-Specific CINR Request. Bits 13–15: *Reserved*; shall be set to zero. NOTE—Bits 15–8 shall only be sent if length = 2.
Bits 0–2 = 0b100	Safety channel	2.10	5	The first 20 bits for the reported bin indices and the next 20 bits for CINR reports (5 bits for each bin).
Bits 0–2 = 0b101	AMC zone	2.11	1 or 2	Bits 0–4: Mean of physical CINR estimate for AMC AAS zone or AMC zone with dedicated pilots with PRBS_ID indicated in Zone-Specific Physical CINR Request. Bit 5: Report type: 0: CINR estimated from pilot subcarriers. 1: CINR estimated from data subcarriers. Bits 6–7: *Reserved*; shall be set to zero. Bits 8–12: Standard deviation of CINR estimate for AMC AAS zone or AMC zone with dedicated pilots. Bits 13–15: *Reserved*; shall be set to zero. NOTE—Bits 15–8 shall only be sent if length = 2.

REP-REQ Preamble physical CINR request	Name	Type	Length	Value
Bits 0–1 = 0b00	The estimation of physical CINR measured from preamble for frequency reuse configuration = 1	2.12	1 or 2	Bits 0–4: The mean of physical CINR estimation measured from preamble for frequency reuse configuration = 1. Bits 5–7: *Reserved*; shall be set to zero. Bits 8–12: The standard deviation of CINR estimation measured from preamble for frequency reuse configuration = 1. Bits 13–15: *Reserved*; shall be set to zero. NOTE—Bits 15–8 shall only be sent if length = 2.

REP-REQ Preamble physical CINR request	Name	Type	Length	Value
Bits 0–1 = 0b01	The estimation of physical CINR measured from preamble for frequency reuse configuration = 3	2.13	1 or 2	Bits 0–4: The mean of physical CINR estimation measured from preamble for frequency reuse configuration = 3. Bits 5–7: *Reserved*; shall be set to zero. Bits 8–12: The standard deviation of CINR estimation measured from preamble for frequency reuse configuration = 3. Bits 13–15: *Reserved*; shall be set to zero. NOTE—Bits 15–8 shall only be sent if length = 2.
Bits 0–1 = 0b10	The estimation of physical CINR measured from preamble for band AMC zone.	2.14	4	The estimation of physical CINR measured from preamble for band AMC subchannel. Bit 31–Bit 20: Band Indication Bitmap (Bit 31 for Band with index 11, Bit 30 for Bandwidth 10 ... Bit 20 for Band with index 0) Bit 19–Bit 0: CINR reports for 4 selected Bands. (5 bits per each band. Band with lower index has lower significant 5 bits)
Bits 0–1 = 0b10	The enhanced estimation of physical CINR measured from preamble for Band AMC zone.	2.15	5	The enhanced estimation of physical CINR measured from preamble for Band AMC subchannel. Bit 39–Bit 28 : Band Indication Bitmap (Bit 39 for Band with index 11, Bit 38 for Bandwidth index 10 .. Bit 28 for Band with index 0) Bit 27–Bit 3: CINR reports for 5 selected Bands. (5 bits per each band. Band with lower index has lower significant 5 bits) Bit 2–Bit 0: Reserved
Bits 0–1 = 0b10	The estimation of physical CINR measured from midamble in an STC zone with dedicated pilot	2.16	5	The estimation of physical CINR measured from midamble for Band AMC subchannel. Bit 39–Bit 28: Band Indication Bitmap (Bit 39 for Band with index 11, Bit 38 for Bandwidth index 10 .. Bit 28 for Band with index 0) Bit 27–Bit 3: CINR reports for 5 selected Bands. (5 bits per each band. Band with lower index has lower significant 5 bits) Bit 2–Bit 0: Reserved

For REP-REQ preamble physical CINR request type 1.5 with Bits 0–1=0b10, enhanced CQICH enabled MS shall report with type 2.15; otherwise, MS shall report with type 2.14.

REP-REQ zone specific effective CINR request	Name	Type	Length	Value
Bits 0–2 = 0b000	PUSC zone with Use All SC=0	2.16	1	Bits 0–3: Effective CINR for PUSC zone with Use All SC=0 and PRBS_ID indicated by Effective CINR Request. Encoding is defined in 8.4.11.5. Bit 4: Report type: 0: Effective CINR estimated from pilot subcarriers. 1: Effective CINR estimated from data subcarriers. Bits 5–7: 3 LSBs of CQICH_ID.
Bits 0–2 = 0b001	PUSC zone with Use All SC=1 / PUSC AAS zone	2.17	1	Bits 0–3: Effective CINR for PUSC zone with Use All SC=1 (or PUSC AAS zone) and PRBS_ID indicated by Effective CINR Request. Encoding is defined in 8.4.11.5. Bit 4: Report type: 0: Effective CINR estimated from pilot subcarriers. 1: Effective CINR estimated from data subcarriers. Bits 5–7: 3 LSBs of CQICH_ID.
Bits 0–2 = 0b010	FUSC zone	2.18	1	Bits 0–3: Effective CINR for FUSC zone with PRBS_ID indicated by Effective CINR Request. Encoding is defined in 8.4.11.5. Bit 4: Report type: 0: Effective CINR estimated from pilot subcarriers. 1: Effective CINR estimated from data subcarriers. Bits 5–7: 3 LSBs of CQICH_ID.
Bits 0–2 = 0b011	Optional FUSC zone	2.19	1	Bits 0–3: Effective CINR for Optional FUSC zone with PRBS_ID indicated by Effective CINR Request. Encoding is defined in 8.4.11.5. Bit 4: Report type: 0: Effective CINR estimated from pilot subcarriers. 1: Effective CINR estimated from data subcarriers. Bits 5–7: 3 LSBs of CQICH_ID.
Bits 0–2 = 0b101	AMC AAS zone	2.20	1	Bits 0–3: Effective CINR for AMC AAS zone or AMC zone with dedicated pilots with PRBS_ID indicated by Effective CINR Request. Encoding is defined in 8.4.11.5. Bit 4: Report type: 0: Effective CINR estimated from pilot subcarriers. 1: Effective CINR estimated from data subcarriers. Bits 5–7: 3 LSBs of CQICH_ID.

NOTE—CQICH_ID applies to triggered update (see 6.3.17.2) for CQI channel allocated with a CQICH_ID and shall be zero in all other cases.

REP-REQ preamble effective-CINR request	Name	Type	Length	Value
Bits 0–1 = 0b00	Estimated effective CINR measured from preamble for frequency reuse configuration = 1	2.21	1	Bits 0–3: Effective CINR based on measurement from preamble with frequency reuse configuration = 1. Encoding is defined in 8.4.11.5. Bits 4–7: 4 LSBs of CQICH_ID.
Bits 0–1 = 0b01	Estimated effective CINR measured from preamble for frequency reuse configuration = 3	2.22	1	Bits 0–3: Effective CINR based on measurement from preamble with frequency reuse configuration = 3. Encoding is defined in 8.4.11.5. Bits 4–7: 4 LSBs of CQICH_ID.

NOTE—CQICH_ID applies to triggered update (see 6.3.17.2) for CQI channel allocated with a CQICH_ID and shall be zero in all other cases.

REP-REQ Channel selectivity report	Name	Type	Length	Value
Bit 0 = 1	Frequency selectivity report	2.23	3	Bits 0–7: *a* Bits 8–15: *b* Bits 16–23: *c*

For the type 2.1 through 2.5, the 5-bit CINR measurement encoding shown in Equation (171) shall be used.

$$n = \begin{cases} 0 & CINR \le -3dB \\ n & (n-4)dB < CINR \le (n-3)dB,\ 0 < n < 31 \\ 31 & CINR > 27dB \end{cases} \tag{171}$$

For the TLVs with types 2.6 through 2.15, the 5-bit physical CINR measurement encoding shown in Equation (172) shall be used.

$$\text{Payload bits} = \begin{cases} 0 & CINR \le -3dB \\ n & (n-4) < CINR \le (n-3),\ 0 < n < 31 \\ 31 & CINR > 27dB \end{cases} \tag{172}$$

11.13 Service flow management encodings

Table 606 and 11.13.1 through 11.13.35 define the parameters associated with UL/DL scheduling for a service flow. It is somewhat complex in that it is composed from a number of encapsulated TLV fields.

Note that the encapsulated UL and DL flow classification configuration setting strings share the same subtype field numbering plan because many of the subtype fields defined are valid for both types of configuration settings except service flow encodings.

UL encodings use the type 145. DL encodings use the type 146. Entries of the form [145/146] indicate the encoding can be applied to either an UL or DL service flow.

Table 606—Service flow encodings

Type	Parameter
1	SFID
2	CID
3	Service Class Name
4	MBS
5	QoS Parameter Set Type
6	Traffic Priority
7	Maximum Sustained Traffic Rate
8	Maximum Traffic Burst
9	Minimum Reserved Traffic Rate
10	*Reserved*
11	Uplink Grant Scheduling Type
12	Request/Transmission Policy
13	Tolerated Jitter
14	Maximum Latency
15	Fixed-length versus Variable-length SDU Indicator
16	SDU Size
17	Target SAID
18	ARQ Enable
19	ARQ_WINDOW_SIZE
20	ARQ_RETRY_TIMEOUT - Transmitter Delay
21	ARQ_RETRY_TIMEOUT - Receiver Delay
22	ARQ_BLOCK_LIFETIME
23	ARQ_SYNC_LOSS_TIMEOUT
24	ARQ_DELIVER_IN_ORDER
25	ARQ_PURGE_TIMEOUT
26	ARQ_BLOCK_SIZE
27	RECEIVER_ARQ_ACK_PROCESSING TIME
28	CS Specification
29	Type of Data Delivery Services
30	SDU Inter-arrival Interval
31	Time Base

Table 606—Service flow encodings *(continued)*

Type	Parameter
32	Paging Preference
33	MBS zone identifier assignment
34	*Reserved*
35	Global Service Class Name
36	Reserved
37	SN Feedback Enabled
38	FSN size
39	CID allocation for Active BSs
40	Unsolicited Grant Interval
41	Unsolicited Polling Interval
42	PDU SN extended subheader for HARQ reordering
43	MBS contents ID
44	HARQ Service Flows
45	Authorization Token
46	HARQ Channel Mapping
47	ROHC Parameter Payload
48	Packet Error Rate
49	PSC assignment
50	Group parameter Create/Change
51	Aggregated HARQ Channels TLV
52	Emergency Indication
53	Regional Emergency Indication
143	Vendor-Specific QoS Parameter
99–113	Convergence Sublayer Types

The CC indicates the status for the dynamic service (DSx-xxx) messages. The value appears in the Confirmation Code field of a DSx message.

The CC values are specified in Table 607.

Table 607—CC values

CC	Status
0	OK/success
1	reject-other
2	reject-unrecognized-configuration-setting
3	reject-temporary / reject-resource
4	reject-permanent / reject-admin
5	reject-not-owner
6	reject-service-flow-not-found
7	reject-service-flow-exists
8	reject-required-parameter-not-present
9	reject-header-suppression
10	reject-unknown-transaction-id
11	reject-authentication-failure
12	reject-add-aborted
13	reject-exceeded-dynamic-service-limit
14	reject-not-authorized-for-the-requested-SAID
15	reject-fail-to-establish-the-requested-SA
16	reject-not-supported-parameter
17	reject-not-supported-parameter-value

11.13.1 SFID

The SFID is used by the BS as the primary reference of a service flow within the SS. Only the BS may issue a SFID for an SS. It uses this parameterization to issue SFIDs in BS-initiated DSA-REQ/DSC-REQ messages and in its DSA-RSP/DSC-RSP to SS-initiated DSA-REQ/DSC-REQ messages. The SS specifies the SFID of a service flow using this parameter in a DSC-REQ message.

Type	Length	Value	Scope
[145/146].1	4	1–4 294 967 295	DSx-REQ DSx-RSP DSx-ACK

11.13.2 CID

The value of this field specifies the CID assigned by the BS to a service flow with a non-null AdmittedQosParamSet or ActiveQosParamSet. The 16-bit value of this field is used in BRs and in MAC PDU headers. This field shall be present in a BS-initiated DSA-REQ or DSC-REQ message related to establishing an admitted or active service flow. This field shall also be present in DSA-RSP and DSC-RSP messages related to the successful establishment of an admitted or active service flow.

Even though a service flow has been successfully admitted or activated (i.e., has an assigned CID) the SFID shall be used for subsequent DSx message signalling as it is the primary handle for a service flow. If a service flow is no longer admitted or active (via DSC-REQ), its CID may be reassigned by the BS.

Type	Length	Value	Scope
[145/146].2	2	CID	DSx-REQ DSx-RSP DSx-ACK

11.13.3 Service Class Name

The value of this field refers to a predefined BS service configuration to be used for this service flow.

Type	Length	Value	Scope
[145/146].3	2 to 128	Null-terminated string of ASCII characters. The length of the string, including null-terminator may not exceed 128 bytes	DSx-REQ DSx-RSP DSx-ACK

When the Service Class Name is used in a service flow encoding, it indicates that all the unspecified QoS parameters of the service flow need to be provided by the BS. It is up to the operator to synchronize the definition of Service Class Names in the BS.

11.13.4 QoS parameter set type

This parameter shall appear within every service flow encoding. It specifies the proper application of the QoS parameter set to the Provisioned set, the Admitted set, and/or the Active set. The QoS parameter set is a subset of the following parameter sets:

— Traffic Priority (11.13.5)
— Maximum Sustained Traffic Rate (11.13.6)
— Maximum Traffic Burst (11.13.7)
— Minimum Reserved Traffic Rate (11.13.8)
— Vendor-specific QoS parameters (11.13.9)
— Tolerated Jitter (11.13.12)
— Maximum Latency (11.13.13)
— Unsolicited Grant Interval (11.13.19)
— Unsolicited Polling Interval (11.13.20)

When two QoS parameter sets are the same, a multibit value of this parameter may be used to apply the QoS parameters to more than one set. A single message may contain multiple QoS parameter sets in separate

type 145/146 service flow encodings for the same service flow. This allows specification of the QoS parameter sets when their parameters are different. Non-QoS parameters shall appear only in the first service flow management encodings. Bit 0 is the LSB of the Value field.

If the QoS parameter set type is included in a service flow encoding for MBS service, the QoS Parameter Set may be omitted in the service flow encoding.

For every service flow that is preprovisioned and for every provisioned service flow added after SS initialization, there shall be a service flow encoding that specifies a ProvisionedQoSParamSet. This service flow encoding, or other service flow encoding(s), may also specify an Admitted and/or Active set.

Type	Length	Value	Scope
[145/146].5	1	Bit 0: Provisioned Set Bit 1: Admitted Set Bit 2: Active Set Bits 3–7: *Reserved*	DSx-REQ DSx-RSP DSx-ACK

A BS shall handle a single update to each of the Active and Admitted QoS parameter sets. The ability to process multiple service flow encodings that specify the same QoS parameter set is not required and is left as a vendor-specific function. If a DSA/DSC contains multiple updates to a single QoS parameter set and the vendor does not support such updates, then the BS shall reply with CC 2 (reject-unrecognized-configuration-setting).

Table 608 lists values used in Dynamic Service messages.

Table 608—Values used in Dynamic Service messages

Value	Messages
001	Apply to Provisioned set only
011	Apply to Provisioned and Admitted set, and perform admission control
101	Apply to Provisioned and Active sets, perform admission control, and activate this service flow
111	Apply to Provisioned, Admitted, and Active sets; perform admission control; and activate this service flow
000	Set Active and Admitted sets to Null
010	Perform admission control and apply to Admitted set
100	Check against Admitted set in separate service flow encoding, perform admission control if needed, activate this service flow, and apply to Active set
110	Perform admission control and activate this service flow, apply parameters to both Admitted and Active sets

11.13.5 Traffic Priority parameter

The value of this parameter specifies the priority assigned to a service flow. Given two service flows identical in all QoS parameters besides priority, the higher priority service flow should be given lower delay and higher buffering preference. For otherwise nonidentical service flows, the priority parameter should not take precedence over any conflicting service flow QoS parameter. The specific algorithm for enforcing this parameter is not mandated here.

For UL service flows, the BS shall use this parameter when determining precedence in request service and grant generation.

Type	Length	Value	Scope
[145/146].6	1	0 to 7—Higher numbers indicate higher priority Default 0	DSx-REQ DSx-RSP DSx-ACK REG-RSP

11.13.6 Maximum Sustained Traffic Rate parameter

This parameter defines the peak information rate of the service. The rate is expressed in bits per second and pertains to the SDUs at the input to the CS. Hence, this parameter does not include IEEE 802.16 MAC overhead such as MAC headers or CRCs. At the BS and SS, the service shall be policed to conform to this parameter, on the average, over time. If this parameter is omitted or set to zero, then there is no explicitly mandated maximum rate. This field specifies only a bound, not a guarantee that the rate is available.

The algorithm for measuring whether a flow exceeds its maximum sustained traffic rate is left to vendor differentiation and is outside the scope of this standard.

SDUs deemed to exceed the maximum sustained traffic rate may be, for instance, delayed or dropped according to the discretion of the vendor.

Type	Length	Value	Scope
[145/146].7	4	Rate (in bits per second)	DSx-REQ, DSx-RSP, DSx-ACK, REG-RSP

11.13.7 Maximum Traffic Burst parameter

This parameter defines the maximum burst size that shall be accommodated for the service. Since the physical speed of ingress/egress ports, the air interface, and the backhaul will, in general, be greater than the maximum sustained traffic rate parameter for a service, this parameter describes the maximum continuous burst the system should accommodate for the service, assuming the service is not currently using any of its available resources.

Type	Length	Value	Scope
[145/146].8	4	Burst size (bytes)	DSx-REQ DSx-RSP DSx-ACK

11.13.8 Minimum Reserved Traffic Rate parameter

This parameter specifies the minimum rate reserved for this service flow. The rate is expressed in bits per second and specifies the minimum amount of data to be transported on behalf of the service flow when averaged over time. The specified rate shall only be honored when sufficient data is available for scheduling.

The BS and SS shall be able to transport traffic up to its minimum reserved traffic rate. If less than the minimum reserved traffic rate is available for a service flow, the BS and SS may reallocate the excess reserved bandwidth for other purposes. The data for this parameter are measured at the input of the CS. The aggregate minimum reserved traffic rate of all service flows may exceed the amount of available bandwidth. If this parameter is omitted, then it defaults to a value of 0 bits per second (i.e., no bandwidth is reserved for the flow).

Type	Length	Value	Scope
[145/146].9	4	Rate (in bits per second)	DSx-REQ DSx-RSP DSx-ACK REG-RSP

11.13.9 Vendor-specific QoS parameters

This allows vendors to encode vendor-specific QoS parameters. The Vendor ID shall be the first TLV embedded inside vendor-specific QoS parameters. If the first TLV inside vendor-specific QoS parameters is not a Vendor ID, then the TLV shall be discarded (see 11.1.6).

Type	Length	Value	Scope
[145/146].143	*variable*	Compound	DSx-REQ DSx-RSP DSx-ACK

11.13.10 UL Grant Scheduling Type parameter

The value of this parameter specifies the UL grant scheduling type that shall be enabled for the associated UL service flow (see 6.3.5.2). If the parameter is omitted, BE is assumed.

Type	Length	Value	Scope
145.11	1	0: *Reserved* 1: Undefined (BS implementation-dependent[a]) 2: BE (default) 3: nrtPS 4: rtPS 5: Extended rtPS 6: UGS 7–255: *Reserved*	DSA-REQ DSA-RSP DSA-ACK

[a]The specific implementation-dependent scheduling service type could be defined in a message of type 145.143 (vendor-specific QoS parameters).

11.13.11 Request/Transmission Policy parameter

The value of this parameter provides the capability to specify certain attributes for the associated service flow. These attributes include options for PDU formation and, for UL service flows, restrictions on the types of BR options that may be used. A value of 1 indicates that the action associated with the attribute bit overrides the default action.

Type	Length	Value	Scope
[145/146].12	1	Bit 0: If this bit is set to 1, the service flow shall not use broadcast BR opportunities. (UL only) (see 6.3.5 and 6.3.5) Bit 1: If this bit is set to 1, the service flow shall not use multicast BR opportunities. (UL only) (see 6.3.5 and 6.3.5) Bit 2: If this bit is set to 1, the service flow shall not piggyback requests with data. (UL only) (see 6.3.5 and 6.3.5) Bit 3: If this bit is set to 1, the service flow shall not fragment data. Bit 4: If this bit is set to 1, the service flow shall not suppress payload headers (CS parameter). If bit 4 is set to'0' and both the SS and the BS support PHS (according to 11.7.7.3), each SDU for this service flow shall be prefixed by a PHSI field, which may be set to 0 (see 5.2). If bit 4 is set to '1', none of the SDUs for this service flow shall have a PHSI field. Bit 5: If this bit is set to 1, the service flow shall not pack multiple SDUs (or fragments) into single MAC PDUs. Bit 6: If this bit is set to 1, the service flow shall not include CRC in the MAC PDU. Bit 7: If this bit is set to 1, the service flow shall not compress payload headers using ROHC. If bit 7 is set to'0' and both the SS and the BS support ROHC (according to 11.7.7.4), each SDU for this service flow shall be compressed using ROHC. If bit 7 is set to '1', none of the SDUs shall be compressed.	DSA-REQ DSA-RSP DSA-ACK

11.13.12 Tolerated Jitter parameter

This parameter defines the maximum delay variation (jitter) for the connection.

Type	Length	Value	Scope
[145/146].13	4	Milliseconds	DSx-REQ, DSx-RSP, DSx-ACK

11.13.13 Maximum Latency parameter

The value of this parameter specifies the maximum interval between the entry of a packet at the CS of the BS or the SS and the forwarding of the SDU to its Air Interface.

If defined, this parameter represents a service commitment (or admission criteria) at the BS or SS and shall be guaranteed by the BS or SS. A BS or SS does not have to meet this service commitment for service flows that exceed their minimum reserved rate.

Type	Length	Value	Scope
[145/146].14	4	Milliseconds	DSx-REQ, DSx-RSP, DSx-ACK, REG-RSP

11.13.14 Fixed-Length Versus Variable-Length SDU Indicator parameter

The value of this parameter specifies whether the SDUs on the service flow are fixed-length or variable-length. The parameter is used only if packing is on for the service flow. The default value is 0, i.e., variable-length SDUs.

Type	Length	Value	Scope
[145/146].15	1	0: Variable-length SDUs 1: Fixed-length SDUs Default = 0	DSA-REQ DSA-RSP DSA-ACK

11.13.15 SDU Size parameter

The value of this parameter specifies the length of the SDU for a fixed-length SDU service flow. This parameter is used only if packing is on and the service flow is indicated as carrying fixed-length SDUs. The default value is 49 bytes, i.e., VC-switched ATM cells with PHS. The parameter is relevant for both ATM and packet CSs.

Type	Length	Value	Scope
[145/146].16	1	Number of bytes. Default = 49.	DSA-REQ, DSA-RSP, DSA-ACK

11.13.16 Target SAID parameter

The target SAID parameter indicates the SAID onto which the service flow that is being set up shall be mapped.

Type	Length	Value	Scope
[145/146].17	2	SAID onto which service flow is mapped	DSA-REQ, DSA-RSP

11.13.17 ARQ TLVs for ARQ-enabled connections

11.13.17.1 ARQ Enable TLV

This TLV indicates whether ARQ use is requested for the connection that is being setup. A value of 0 indicates that ARQ is not requested and a value of 1 indicates that ARQ is requested. The DSA-REQ shall contain the request to use ARQ or not. The DSA-RSP message shall contain the acceptance or rejection of the request. ARQ shall be enabled for this connection only if both sides report this TLV to be nonzero. The connection shall be accepted with ARQ if both sides report the TLV to be nonzero. If only one side reports the TLV to be nonzero, the connection shall either be rejected or accepted without ARQ.

Type	Length	Value	Scope
[145/146].18 1.18	1	0 = ARQ Not Requested/Accepted 1 = ARQ Requested/Accepted	DSA-REQ, DSA-RSP REG-REQ, REG-RSP

11.13.17.2 ARQ_WINDOW_SIZE TLV

This parameter is negotiated upon connection setup or during operation. The DSA-REQ message shall contain the suggested value for this parameter. The DSA-RSP message shall contain the confirmation value or an alternate value for this parameter. The smaller of the two shall be used as the ARQ_WINDOW_SIZE TLV.

Type	Length	Value	Scope
[145/146].19 1.19	2	> 0 and ≤ (ARQ_BSN_MODULUS/2)	DSA-REQ, DSA-RSP REG-REQ, REG-RSP

11.13.17.3 ARQ_RETRY_TIMEOUT TLV

The ARQ_RETRY_TIMEOUT TLV should account for the transmitter and receiver processing delays and any other delays relevant to the system.

TRANSMITTER_DELAY: This is the total transmitter delay, including sending (e.g., MAC PDUs) and receiving (e.g., ARQ feedback) delays and other implementation dependent processing delays. If the transmitter is the BS, it may include other delays such as scheduling and propagation delay.

RECEIVER_DELAY: This is the total receiver delay, including receiving (e.g., MAC PDUs) and sending (e.g., ARQ feedback) delays and other implementation-dependent processing delays. If the receiver is the BS, it may include other delays such as scheduling and propagation delay.

The DSA-REQ message shall contain the values for these parameters, if the sender is requesting ARQ. The DSA-RSP message shall contain the values for these parameters if the sender of the corresponding DSA-REQ message requested ARQ and the sender of the DSA-RSP is accepting ARQ. When the DSA handshake is completed, each party shall calculate ARQ_RETRY_TIMEOUT TLV to be the sum of TRANSMITTER_DELAY and RECEIVER_DELAY.

Type	Length	Value	Scope
[145/146].20 1.20	2	TRANSMITTER_DELAY 0-6553500 µs (100 µs granularity)	DSA-REQ, DSA-RSP REG-REQ, REG-RSP
[145/146].21 1.21	2	RECEIVER_DELAY 0–6553500 µs (100 µs granularity)	DSA-REQ, DSA-RSP REG-REQ, REG-RSP

11.13.17.4 ARQ_BLOCK_LIFETIME TLV

The DSA-REQ message shall contain the value of this parameter as defined by the parent service flow. If this parameter is set to 0, then the ARQ_BLOCK_LIFETIME TLV value shall be considered infinite.

Type	Length	Value	Scope
[145/146].22 1.22	2	0 = Infinite 1–6553500 µs (100 µs granularity)	DSA-REQ, DSA-RSP REG-REQ, REG-RSP

11.13.17.5 ARQ_SYNC_LOSS_TIMEOUT TLV

The BS shall set this parameter. The DSA-REQ or DSA-RSP messages shall contain the value of this parameter as set by the BS. If this parameter is set to 0, then the ARQ_SYNC_LOSS_TIMEOUT TLV value shall be considered infinite.

Type	Length	Value	Scope
[145/146].23 1.23	2	0 = Infinite 1–6553500 µs (100 µs granularity)	DSA-REQ, DSA-RSP REG-REQ, REG-RSP

11.13.17.6 ARQ_DELIVER_IN_ORDER TLV

The DSA-REQ message shall contain the value of this parameter. This TLV indicates whether data is to be delivered by the receiving MAC to its client application in the order in which the data was handed off to the originating MAC.

Type	Length	Value	Scope
[145/146].24 1.24	1	0–Order of delivery is not preserved 1–Order of delivery is preserved	DSA-REQ, DSA-RSP REG-REQ, REG-RSP

If this flag is not set, then the order of delivery is not preserved. If this flag is set (to 1), then the order of delivery is preserved.

11.13.17.7 ARQ_RX_PURGE_TIMEOUT TLV

The DSA-REQ message shall contain the value of this parameter as defined by the parent service flow. If this parameter is set to 0, then the ARQ_RX_PURGE_TIMEOUT TLV value shall be considered infinite.

Type	Length	Value	Scope
[145/146].25 1.25	2	0 = Infinite 0–6553500 µs (100 µs granularity)	DSA-REQ, DSA-RSP REG-REQ, REG-RSP

11.13.17.8 ARQ_BLOCK_SIZE TLV

This value of this parameter specifies the size of an ARQ block. This parameter shall be established by negotiation during the connection creation dialog.

The requester includes its desired minimum and maximum setting in the DSA-REQ/REG-REQ message. The receiver of the DSA-REQ/REG-REQ message shall select the value it prefers within the range of the two values, inclusive, in the DSA-REQ/REG-REQ message. This selected value is included in selected block size of the DSA-RSP/REG-RSP message.

Absence of the parameter during a DSA dialog shall indicate the originator of the message desires the maximum value.

Type	Length	Value	Scope
[145/146].26 1.26	1	For DSA-REQ and REG-REQ: Bit 0–3: encoding for proposed minimum block size (M) Bit 4–7: encoding for proposed maximum block size (N) where: The minimum block size is equal to 2^(M+4) and the maximum block size is equal to 2^(N+4), M≤6, N≤6, and M≤N For DSA-RSP and REG-RSP: Bit 0–3: encoding for selected block size (P) Bit 4–7: set to 0 where: The selected block size is equal to 2^(P+4), P≤6 and M≤P≤N	DSA-REQ, DSA-RSP REG-REQ, REG-RSP

11.13.17.9 RECEIVER_ARQ_ACK_PROCESSING_TIME TLV

The BS or SS may provide this parameter. The DSA-REQ and DSA-RSP messages may contain the value of this parameter. This optional parameter indicates the number of ms required by the ARQ receiver to process the received ARQ blocks and provide a valid ACK or NAK. This does not mean that the receiver would actually transmit an ACK or NAK after this time, but rather it can be optionally used by the transmitter that

receives an ACK bit-map to determine which bits are retransmissions of historical NAKs or ACKs, that are not based on newly received ARQ blocks.

Type	Length	Value	Scope
[145/146].27 1.27	1	0–255	DSA-REQ, DSA-RSP REG-REQ, REG-RSP

11.13.18 CS-specific service flow encodings

11.13.18.1 CS Specification parameter

This parameter specifies the CS that the connection being set up shall use.

Type	Length	Value	Scope
[145/146].28	1	0: GPCS (Generic Packet Convergence Sublayer) 1: Packet, IPv4 2: Packet, IPv6 3: Packet, IEEE 802.3/Ethernet[a] 4: *Reserved* 5: Packet, IPv4 over IEEE 802.3/Ethernet[a] 6: Packet, IPv6 over IEEE 802.3/Ethernet[a] 7: *Reserved* 8: *Reserved* 9: ATM 10: *Reserved* 11: *Reserved* 12: *Reserved* 13: *Reserved* 14: Packet, IP[b] 15–255 *Reserved*	DSA-REQ

[a]Classifiers for IEEE 802.1Q VLAN tags may be applied to service flows of this CS type.
[b]SDUs for service flows of this CS type may carry either IPv4 or IPv6 in the header-compressed payload.

11.13.18.2 CS parameter encoding rules

Each CS defines a set of parameters that are encoded within a subindex under the “cst” values listed below. In the cases of IP over IEEE 802.3, the relevant IP and IEEE 802.3 parameters shall be included in the DSx-REQ message.

cst	CS
99	ATM
100	Packet, IPv4
101	Packet, IPv6
102	Packet, IEEE 802.3/Ethernet
103	*Reserved*

cst	CS
104	Packet IPV4 over IEEE 802.3/Ethernet
105	Packet IPV6 over IEEE 802.3/Ethernet
106	*Reserved*
107	*Reserved*
108	*Reserved*
109	*Reserved*
110	*Reserved*
111	*Reserved*
112	GPCS (Generic Packet Convergence Sublayer)
113	Packet IP

Type	Length	Value
[145/146].cst	variable	Compound

11.13.18.3 Packet CS encodings for configuration and MAC messaging

The following TLV encoded parameters shall be used in Dynamic Service messages. The CS specific type is denoted in the tables in the following subclauses by the variable "cst," which takes its value from the table in 11.13.18.2 (e.g., 100, 101, ...) depending upon the exact packet CS used for the service.

11.13.18.3.1 QoS-related encodings

The following TLV encodings shall be used in registration messages and Dynamic Service messages to encode parameters for packet classification and scheduling.

The following configuration settings shall be supported by all SSs that are compliant with this specification.

11.13.18.3.2 Classifier DSC Action

When received in a DSC-REQ, this indicates the action to be taken with this classifier.

Type	Length	Value
[145/146].cst.1	1	0: DSC Add Classifier 1: DSC Replace Classifier 2: DSC Delete Classifier

11.13.18.3.3 Packet Classification Rule parameter

This compound parameter contains the parameters of the classification rule. All parameters pertaining to a specific classification rule shall be included in the same Packet Classification Rule compound parameter. A

packet classification rule containing only the classification rule index (11.13.18.3.3.14) and with no other classification parameters matches all packets entering the convergence sublayer.

Type	Length	Value
[145/146].cst.3	*variable*	Compound

11.13.18.3.3.1 Classification Rule Priority field

The value of this field specifies the priority for the classification rule, which is used for determining the order of the classification rule. A higher value indicates higher priority.

Classification rule may have priorities in the range 0–255 with the default value being 0.

Type	Length	Value
[145/146].cst.3.1	1	0–255

11.13.18.3.3.2 *Reserved*

Type	Length	Value
[145/146].cst.3.2	3	*Reserved* (deprecated by [145/146].cst.3.20

11.13.18.3.3.3 Protocol field

The value of this field specifies a matching value for the IP Protocol field. For IPv6 (IETF RFC 2460), this refers to next header entry in the last header of the IP header chain. The encoding of the value field is that defined by the IANA document “Protocol Numbers.” If this parameter is omitted, then comparison of the IP Header Protocol field for this entry is irrelevant.

Type	Length	Value
[145/146].cst.3.3	1	protocol

11.13.18.3.3.4 IP Masked Source Address parameter

This parameter specifies an IP source address (designated “src”) and its corresponding address mask (designated “smask”). An IP packet with IP source address “ip-src” matches this parameter if src = (ip-src AND smask). If this parameter is omitted, then comparison of the IP packet source address for this entry is irrelevant.

Type	Length	Value
[145/146].cst.3.4	8 (IPv4) or 32 (IPv6)	src, smask

11.13.18.3.3.5 IP Masked Destination Address parameter

This parameter specifies an IP destination address (designated "dst") and its corresponding address mask (designated "dmask"). An IP packet with IP destination address "ip-dst" matches this parameter if dst = (ip-dst AND dmask). If this parameter is omitted, then comparison of the IP packet destination address for this entry is irrelevant.

Type	Length	Value
[145/146].cst.3.5	8 (IPv4) or 32 (IPv6)	dst, dmask

11.13.18.3.3.6 Protocol Source Port Range field

The value of this field specifies a range of protocol source port values. Classification rules with port numbers are protocol-specific; i.e., a rule on port numbers without a protocol specification shall not be defined. An IP packet with protocol port value "src-port" matches this parameter if src-port is greater than or equal to sportlow and src-port is less than or equal to sporthigh. If this parameter is omitted, the protocol source port is irrelevant. This parameter is irrelevant for protocols without port numbers.

Type	Length	Value
[145/146].cst.3.6	4	sportlow, sporthigh

11.13.18.3.3.7 Protocol Destination Port Range field

The value of this field specifies a range of protocol destination port values. Classification rules with port numbers are protocol-specific; i.e., a rule on port numbers without a protocol specification shall not be defined. An IP packet with protocol port value "dst-port" matches this parameter if dst-port is greater than or equal to dportlow and dst-port is less than or equal to dporthigh. If this parameter is omitted the protocol destination port is irrelevant. This parameter is irrelevant for protocols without port numbers.

Type	Length	Value
[145/146].cst.3.7	4	dportlow, dporthigh

11.13.18.3.3.8 IEEE 802.3/Ethernet Destination MAC Address parameter

This parameter specifies a MAC destination address (designated "dst") and its corresponding address mask (designated "msk"). An IEEE 802.3/Ethernet packet with MAC destination address "etherdst" corresponds to this parameter if dst = (etherdst AND msk). If this parameter is omitted, then comparison of the IEEE 802.3/Ethernet destination MAC address for this entry is irrelevant.

Type	Length	Value
[145/146].cst.3.8	12	dst, msk

11.13.18.3.3.9 IEEE 802.3/Ethernet Source MAC Address parameter

This parameter specifies a MAC source address (designated "src") and its corresponding address mask (designated "msk"). An IEEE 802.3/Ethernet packet with MAC source address "ethersrc" corresponds to this parameter if src = (ethersrc AND msk). If this parameter is omitted, then comparison of the IEEE 802.3/Ethernet source MAC address for this entry is irrelevant.

Type	Length	Value
[145/146].cst.3.9	12	src, msk

11.13.18.3.3.10 Ethertype/IEEE 802.2 SAP

The format of the Layer 3 protocol ID in the Ethernet packet is indicated by type, eprot1, and eprot2 as follows:

— If type = 0, the rule does not use the Layer 3 protocol type as a matching criteria. If type = 0, eprot1, eprot2 are ignored when considering whether a packet matches the current rule.
— If type = 1, the rule applies only to SDUs that contain an Ethertype value. Ethertype values are contained in packets using the DEC-Intel-Xerox (DIX) encapsulation or the Sub-Network Access Protocol (SNAP) encapsulation (IEEE 802.2, IETF RFC 1042) format. If type = 1, then eprot1, eprot2 gives the 16 bit value of the Ethertype that the packet shall match in order to match the rule.
— If type = 2, the rule applies only to SDUs using the IEEE 802.2 encapsulation format with a Destination Service (DSAP) other than 0xAA (which is reserved for SNAP). If type = 2, the lower 8 bits of the eprot1, eprot2 shall match the DSAP byte of the packet in order to match the rule.

If the Ethernet SDU contains an IEEE 802.1D and IEEE 802.1Q tag header (i.e., Ethertype 0x8100), this object applies to the embedded Ethertype field within the IEEE 802.1D and IEEE 802.1Q header.

Other values of type are reserved. If this TLV is omitted, then comparison of either the Ethertype or IEEE 802.2 DSAP for this rule is irrelevant.

Type	Length	Value
[145/146].cst.3.10	3	type, eprot1, eprot2

11.13.18.3.3.11 IEEE 802.1D User Priority field

The values of this field specify the matching parameters for the IEEE 802.1D user_priority bits. An Ethernet packet with IEEE 802.1D user_priority value "priority" matches these parameters if priority is greater than or equal to pri-low and priority is less than or equal to pri-high. If this field is omitted, then comparison of the IEEE 802.1D user_priority bits for this entry is irrelevant.

If this parameter is specified for an entry, then Ethernet packets without IEEE 802.1Q encapsulation shall NOT match this entry. If this parameter is specified for an entry on an SS that does not support forwarding of IEEE 802.1Q encapsulated traffic, then this entry shall not be used for any traffic.

Type	Length	Value
[145/146].cst.3.11	2	pri-low, pri-high Valid range: 0–7 for pri-low and pri-high

11.13.18.3.3.12 IEEE 802.1Q VLAN ID field

The value of this field specifies the matching value for the IEEE 802.1Q vlan_id bits. Only the first (i.e., leftmost) 12 bits of the specified vlan_id field are significant; the final four bits shall be ignored for comparison. If this field is omitted, then comparison of the IEEE 802.1Q vlan_id bits for this entry is irrelevant.

If this parameter is specified for an entry, then Ethernet packets without IEEE 802.1Q encapsulation shall not match this entry. If this parameter is specified for an entry on an SS that does not support forwarding of IEEE 802.1Q encapsulated traffic, then this entry shall not be used for any traffic.

Type	Length	Value
[145/146].cst.3.12	2	vlan_id1, vlan_id2

11.13.18.3.3.13 Associated PHSI field

The Associated PHSI field has a value between 1 and 255, which shall mirror the PHSI value of a PHS rule. Packets matching the Packet Classification Rule containing the Associated PHSI parameter shall undergo PHS according to the corresponding PHS rule.

Type	Length	Value
[145/146].cst.3.13	1	Index value

11.13.18.3.3.14 Packet Classification Rule Index field

The Packet Classification Rule Index field identifies a packet classification rule. The packet classification rule index is unique per service flow. The BS shall assign all Packet Classifier Rule Index values.

Type	Length	Value
[145/146].cst.3.14	2	Packet Classification Rule Index

11.13.18.3.3.15 Vendor-specific classification parameters

This allows vendors to encode vendor-specific classification rule parameters. The Vendor ID shall be the first TLV embedded inside vendor-specific classification rule parameters. If the first TLV inside vendor-specific classification rule parameters is not a Vendor ID, then the TLV shall be discarded (see 11.1.6).

Type	Length	Value
[145/146].cst.3.143	*variable*	Compound

11.13.18.3.3.16 IPv6 Flow Label field

The value of this field specifies a matching value for the IPv6 Flow Label field. As the Flow Label field has a length of 20 bits, the first 4 bits of the most significant byte shall be set to 0x0 and disregarded.

Type	Length	Scope
[145/146].cst.3.15	3	Flow Label

11.13.18.3.3.17 Classification Action Rule

The value of this field specifies an action associate with the classifier rule.

If this classification action rule exists, its action shall be applied on the packets that match this classifier rule.

Type	Length	Value
[145/146].cst.3.19	1	See below

Bit 0:
0 = none.
1 = Discard packet
Bit 1–7: *Reserved*.

11.13.18.3.3.18 IP Type of Service

The value of this TLV specifies the matching parameters for the IP Type of Service (TOS) octet. The 6 MSBs shall be set to a Differentiated Service Codepoint (DSCP), as specified by RFC 2474, and the 2 LSBs shall be reserved and set to 0b00. The DSCP values are managed by IANA under the Differentiated Services Field Codepoints registry. If this field is omitted, then comparison of the IP packet TOS octet for this entry is irrelevant.

Type	Length	Value
[145/146].cst.3.20	1	Bit 0–Bit 1: *reserved*. Shall be set to 0b00 Bit 2–Bit 7: DSCP value

11.13.18.3.4 PHS DSC Action field

When received in a DSC-REQ, this field indicates the action that shall be taken with this PHS byte string.

Type	Length	Value
[145/146].cst.4	1	0: Add PHS Rule 1: Set PHS Rule 2: Delete PHS Rule 3: Delete all PHS Rules

The Set PHS Rule command is used to add the specific TLVs for an undefined PHS rule. It shall NOT be used to modify existing TLVs.

When deleting all PHS Rules, any corresponding PHSI shall be ignored.

An attempt to add a PHS Rule that already exists is an error condition.

11.13.18.3.5 PHS Rule field

This field defines the parameters associated with a PHS Rule.

Type	Length	Value
[145/146].cst.6	*n*	

11.13.18.3.5.1 PHSI field

The PHSI has a value between 1 and 255, which uniquely references the suppressed byte string. The index is unique per service flow.

Type	Length	Value
[145/146].cst.6.1	1	Index value

11.13.18.3.5.2 PHSF field

The PHSF is a string of bytes containing the header information to be suppressed by the sending CS and reconstructed by the receiving CS. The most significant byte of the string corresponds to the first byte of the CS-SDU.

Type	Length	Value
[145/146].cst.6.2	*n*	String of bytes suppressed

The length *n* shall always be the same as the value for PHSS.

11.13.18.3.5.3 PHSM field

The value of this field is used to interpret the values in the PHSF. It is used at both the sending and receiving entities on the link. The PHSM allows fields, such as sequence numbers or checksums (which vary in value), to be excluded from suppression with the constant bytes around them suppressed.

Type	Length	Value
[145/146].cst.6.3	*n*	Bit 0: 0 = Don't suppress first byte of the suppression field 1 = Suppress first byte of the suppression field Bit 1: 0 = Don't suppress second byte of the suppression field 1 = Suppress second byte of the suppression field Bit *x*: 0 = Don't suppress (*x* + 1) byte of the suppression field 1 = Suppress (*x* + 1) byte of the suppression field

The length *n* is ceiling (PHSS/8). Bit 0 is the MSB of the Value field. The value of each sequential bit in the PHSM is an attribute for the corresponding sequential byte in the PHSF.

If the bit value is a 1, the sending entity should suppress the byte, and the receiving entity shall restore the byte from its cached PHSF. If the bit value is a 0, the sending entity shall not suppress the byte, and the receiving entity shall restore the byte by using the next byte in the packet.

If this TLV is not included, the default is to suppress all bytes.

11.13.18.3.5.4 PHSS field

The value of this field is the total number of bytes in the header to be suppressed and then restored in a service flow that uses PHS.

Type	Length	Value
[145/146].cst.6.4	1	Number of bytes in the suppression string

For all packets that get classified and assigned to a service flow with PHS enabled, suppression shall be performed over the specified number of bytes as indicated by the PHSS and according to the PHSM. A PHS Rule shall only be used if it has been completely defined by the PHSS TLV. The range of valid values for PHSS is 1–255.

11.13.18.3.5.5 PHSV field

The value of this field indicates to the sending entity whether the packet header contents are to be verified prior to performing suppression. If PHSV is enabled, the sender shall compare the bytes in the packet header with the bytes in the PHSF that are to be suppressed as indicated by the PHSM.

Type	Length	Value
[145/146].cst.6.5	1	0: Verify 1: Don't verify

If this TLV is not included, the default is to verify. Only the sender shall verify suppressed bytes. If verification fails, the payload header shall NOT be suppressed.

11.13.18.3.5.6 Vendor-specific PHS parameters

This allows vendors to encode vendor-specific PHS parameters. The Vendor ID shall be the first TLV embedded inside vendor-specific PHS parameters. If the first TLV inside vendor-specific PHS parameters is not a Vendor ID, then the TLV shall be discarded.

Type	Length	Value
[145/146].cst.6.143	*variable*	Compound

11.13.18.4 ATM CS encodings for configuration and MAC messaging

The TLV encodings listed in 11.13.18.4.1 through 11.13.18.4.3 shall be used in the configuration file, in SS registration requests (when applicable), and in Dynamic Service messages (when applicable). All ATM specific TLVs are prefixed to begin with a Type value of [145/146].99.

11.13.18.4.1 ATM Switching Encoding field

This field defines the switching methodology for the service. If the field = 0, at least one VPI/VCI Classifier pair shall be defined for classifying the service. If the field = 1, exactly one VPI Classifier and zero or one VCI Classifier shall be specified for classifying the service. If the field = 2, exactly one VPI Classifier and one VCI Classifier shall be defined for classifying the service. If the field = 0, PHS is not allowed and the SDU size TLV shall equal 52. If the field = 1 and PHS is on for the service, the SDU size TLV shall equal 51; otherwise it shall be set equal to 52. If the field = 2 and PHS is on for the service, the SDU size TLV shall equal 49; otherwise it shall be set equal to 52.

Type	Length	Value
[145/146].99.1	1	0: No switching methodology applied 1: VP switching 2: VC switching

11.13.18.4.2 ATM Classifier TLV field

This field defines an ATM classifier. It is a compound TLV used to describe the VPI and associated VCIs for ATM classification.

Type	Length	Value
[145/146].99.2	*variable*	Compound

It shall have the following form:

Field	Note
ATM Classifier ID	Always present
VPI Classifier	Always present except for DSC Change action deleting classifier
VCI Classification	0 or more instances (number apparent from ATM Classifier length field) if VPI Classifier is present

11.13.18.4.2.1 VPI Classifier field

This field defines the VPI on which to classify ATM cells for the service flow.

Type	Length	Value
[145/146].99.2.1	2	8-bit or 12-bit VPI field value

11.13.18.4.2.2 VCI Classification field

This field defines the VCI on which to classify ATM cells for the service flow.

This TLV shall immediately follow the VPI TLV with which it is associated.

Type	Length	Value
[145/146].99.2.2	2	16-bit VCI field value

11.13.18.4.2.3 ATM Classifier ID field

This field is used to identify an ATM classifier.

Type	Length	Value
[145/146].99.2.3	2	16-bit classifier ID

11.13.18.4.3 ATM Classifier DSC Action field

When received in a DSC-REQ message, this field indicates the action to be taken on a classifier. If the action TLV is Add or Replace, the action is followed by a complete ATM Classifier compound TLV. If the action is delete, the action TLV is followed by the ATM Classifier compound TLV composed only of the ATM Classifier ID TLV.

Type	Length	Value
[145/146].99.3	1	0: DSC Add Classifier 1: DSC Replace Classifier 2: DSC Delete Classifier

11.13.18.5 GPCS CS encodings for configuration and MAC messaging

11.13.18.5.1 GPCS PROTOCOL_TYPE encoding

The GPCS_PROTOCOL_TYPE TLV indicates the type of protocol layer that sits above the GPCS service. This allows the remote end to be able to correctly parse the payload contents of GPCS PDUs.

Type	Length	Value	Scope
[145/146].cst.7.1	2	Two byte upper layer protocol number	DSx-REQ, DSx-RSP

The value field is 16 bits and its encoding is defined in the following table.

GPCS_PROTOCOL_TYPE	Layer above GPCS	Notes
0x0000	Ethernet MAC Service	An upper layer that sinks and sources Ethernet formatted frames consistent with those used in the Ethernet CS.
0x0001	MPLS	Raw MPLS packets with MPLS label and payload.
0x0002	PPP	The Point to Point Protocol.
0x0003	Raw IP	Raw IP packets. This is necessary for a point to point IP link since ARP cannot be supported. Note that the first byte of every IP packet allows the distinction between IPv4, IPv6 and ROHC (RFC 3095) IP packets so these protocols may be multiplexed over the same GPCS connection.
0x0004	ECRTP	ECRTP (Enhanced Compressed RTP) encapsulated packets (IETF RFC 3545).
0x0005-0xEFFF	*Reserved*	Reserved for future additional encodings. These encodings shall not be used.
0xF000-0xFFFF	*Reserved Playpen*	These encodings shall not be used in deployed equipment and are reserved for experimental use.

For a connection using Generic Packet CS, this TLV shall be used to indicate the protocol carried over the connection. For other packet CS types, GPCS_PROTOCOL_TYPE is not used.

11.13.19 Unsolicited Grant Interval parameter

The value of this parameter specifies the nominal interval between successive data grant opportunities for this service flow. The ideal schedule for enforcing this parameter is defined by a reference time t_0, with the desired transmission time $t_i = t_0 + i \times$ interval. The actual grant time, t'_i shall be in the range $t_i \le t'_i \le t_i +$ jitter, where interval is the value specified with this TLV, and jitter is the Tolerated Jitter.

Type	Length	Value	Scope
[145].40	2	Milliseconds	DSA-REQ, DSA-RSP, DSC-REQ, DSC-RSP

11.13.20 Unsolicited Polling Interval parameter

The value of this parameter specifies the maximal nominal interval between successive polling grants opportunities for this Service Flow. The ideal schedule for enforcing this parameter is defined by a reference time t_0, with the desired polling time $t_i = t_{(i-1)} +$ interval.

Type	Length	Value	Scope
[145].41	2	Milliseconds	DSA-REQ, DSA-RSP, DSC-REQ, DSC-REP

11.13.21 FSN size TLV

This TLV indicates the size of the FSN for the connection that is being setup. A value of 0 indicates that FSN is 3-bit long and a value of 1 indicates that FSN is 11-bit long.

Type	Length	Value	Scope
[145/146].38	1	0: 3-bit FSN 1: 11-bit FSN Default = 1	DSA-REQ, DSA-RSP, DSA-ACK

11.13.22 MBS service TLV

This TLV indicates whether the MBS service is being requested or provided for the connection that is being setup. A value of 1 indicates that an MBS service limited to the serving BS is being requested and a value of 2 indicates multi-BS-MBS with macro-diversity is being requested. A value of 3 indicates that multi-MBS without macro-diversity is being requested or provided. If MS or BS wants to initiate MBS service, DSA-REQ with MBS service TLV shall be used. The DSA-RSP message shall contain the acceptance or rejection of request and if there is no available MBS, MBS service value shall be set to 0.

Type	Length	Value	Scope
[145/146].4	1	0: No available MBS 1: MBS in Serving BS Only 2: MBS in a multi-BS Zone supporting macro-diversity 3: MBS in a multi-BS Zone not supporting macro-diversity 4–255: *Reserved*	DSA-REQ DSA-RSP DSA-ACK DSC-REQ, DSC-RSP

The MBS service TLV shall only be updated in conjunction with an inter-MBS-zone transition.

The BS shall not establish an MBS service type that is incompatible with MS capabilities (refer to 11.7.24) or which is not supported at the BS.

11.13.23 Global Service Class Name field

The value of this field refers to a predefined BS service configuration to be used for this service flow. The Global Service Class Name itself contains coded references to extensible tables defining QoS Parameters.

Type	Length	Value	Scope
[145/146].35	*variable* (see 6.3.14.4.1)	Variable: Refer to Table 186 of 6.3.14.4.1	DSx-REQ DSx-RSP DSx-ACK RNG-RSP

When the Global Service Class Name is used in a service flow encoding, it indicates that all the unspecified QoS Parameters of the service flow need to be provided by the BS. Global Service Class Names are by definition synchronized among all BS.

11.13.24 Type of Data Delivery Services parameter

The value of this parameter specifies type of Data Delivery Service as defined in 6.3.19. This TLV shall apply only to DL Service Flows.

Type	Length	Value	Scope
[146].29	1	0: Unsolicited Grant Service 1: Real-Time Variable Rate Service 2: Non-Real-Time Variable Rate Service 3: Best Effort Service 4: Extended Real-Time Variable Rate Service	DSA-REQ, DSA-RSP REG-REQ, REG-RSP

11.13.25 SDU Inter-Arrival Interval parameter

This parameter specifies nominal interval between consequent SDU arrivals as measured at MAC SAP.

Type	Length	Value	Scope
[145/146].30	2	SDU inter-arrival interval in the resolution of 0.5 ms	DSA-REQ, DSA-RSP DSC-REQ, DSC-RSP REG-REQ, REG-RSP

11.13.26 Time Base parameter

This parameter specifies time base for rate measurement as defined in 6.3.19.

Type	Length	Value	Scope
[145/146].31	2	Time base in milliseconds	DSA-REQ, DSA-RSP DSC-REQ, DSC-RSP REG-REQ, REG-RSP

11.13.27 MBS Zone Identifier Assignment parameter

The DSA-REQ/RSP message may contain the value of this parameter to specify a MBS Zone identifier. This parameter indicates a MBS zone through which the connection or virtual connection for the associated service flow is valid.

Type	Length	Value	Scope
[145/146].33	1	MBS zone identifier (bits 6 through 0 are the MBS Zone Identifier, bit 7 is set to 0)	DSA-REQ DSA-RSP DSC-REQ DSC-RSP

11.13.28 Paging Preference parameter

This parameter specifies whether a service flow may generate paging.

Type	Length	Value	DSX
[145/146].32	1	0: No paging generation 1: Paging generation	DSx-REQ, DSx-RSP, DSx-ACK

11.13.29 SN Feedback Enabled field

The SN Feedback Enabled field indicates whether SN feedback is enabled for the given connection. A value of 0 indicates that SN feedback is not enabled. A value of 1 indicates that SN feedback is enabled.

Type	Length	Value	Scope
[145/146].37	1	0: SN feedback is disabled (default) 1: SN feedback is enabled	DSA-REQ, DSA-RSP, DSC-REQ, DSC-REP

11.13.30 HARQ Service Flows field

The HARQ Service Flows field specifies whether the connection uses HARQ.

The relevant connections of this parameter when it appears in SBC-REQ/RSP messages are Basic, Primary, and Secondary CIDs. HARQ is enabled independently in the UL and DL directions. For the UL management connections, this TLV is encapsulated in the compound UL service flow TLV Type = 145. For the DL management connections, this TLV is encapsulated in the compound DL service flow TLV Type = 146.

The MS and BS shall transmit MAC PDUs on transport connections for which HARQ has been enabled in HARQ subbursts only, and shall transmit MAC PDUs on transport connections for which HARQ has not been enabled in non-HARQ bursts only. Unless HARQ has been enabled for the management connections, the BS shall transmit MAC management PDUs in non-HARQ bursts only. The MS should not discard a MAC management PDU received in a non-HARQ burst, even if HARQ has been enabled for the management connection. The BS should not discard a MAC management PDU without payload received in a HARQ allocation irrespectively of whether HARQ has been enabled for the management connection. The BS should not discard a MAC management PDU received in a non-HARQ allocation irrespectively of whether HARQ has been enabled for the management connection.

A non-HARQ burst is a burst for which the receiver cannot expect a HARQ retransmission.

Type	Length	Value	Scope
[145/146].44	1	0: Non-HARQ (default) 1: HARQ connection	DSA-REQ, DSA-RSP, SBC-REQ, SBC-RSP

11.13.31 .CID Allocation for Active BSs field

The value of this field specifies a list of CIDs assigned by active BSs in the diversity set except for the anchor BS for the service flow with non-null AdmittedQoSParamSet or ActiveQoSParamSet. There is one CID per active BS and the CID is used when the active BS becomes the anchor BS. If CID assignment is sent for each active BS in MOB_BSHO-RSP and MOB_BSHO-REQ messages, the DSx messages shall contain CID allocation for Active BSs. The CID for anchor BS is defined by 11.13.2. The value of (Num of active BS) is used to calculate length is the number of BSs in the diversity set.

Type	Length	Value	Scope
[145/146].39	*variable* Length is defined as: (Num of active BS – 1) × 2	List of CIDs for the active BSs. Starting from the first byte, every 2 bytes contains one CID value per active BS. CIDs are listed based on the TEMP_BS_ID of the active BS. The BS. The TEMP_BS_IDs are sorted in an ascending order	DSA-REQ/RSP DSC-REQ/RSP

11.13.32 Authorization Token field

The value of the Authorization Token field specifies an authorization token that may be used when MS creates or modifies a service flow by sending DSA-REQ or DSC-REQ message. An authorization token identifies a session and its QoS parameters, and is used for authorizing the QoS for one or more IP flows generated by higher level service creation/modification procedures. The token is provided to the MS by the higher level service through some mechanism that is outside the scope of this specification. The MS shall include the token in this TLV exactly as received from the higher level service and shall treat the token as an opaque octet string whose meaning is of significance only to those higher level services. The field should not be included in the DSA-REQ or DSC-REQ messages that are sent by BS.

Type	Length	Value	Scope
[145/146].45	*variable*	Authorization token that is used for authorizing the QoS for one or service flows generated by MS-initiated higher level service flow creation or modification procedures.	DSA-REQ DSC-REQ

11.13.33 HARQ Channel Mapping TLV

This TLV is valid only for HARQ-enabled connection. It specifies the set of HARQ channels for carrying data on this connection acceptable to the sender of this TLV. A HARQ channel may be shared by more than one connection.

The absence of this TLV in any of the REQ or RSP messages relevant for the connection means that the sender of the message accepts that all HARQ channels from ‘0’ up to the number of HARQ channels supported may be used by this connection. Only the HARQ channels commonly accepted for the connection by the MS and the BS may be used.

The relevance of this parameter when it appears in the SBC-REQ/RSP messages is the Basic, Primary, and Secondary connections. HARQ Channel mapping is enabled independently in the UL and DL directions. For the UL management connections, this TLV is encapsulated in the compound UL service flow TLV Type =

145. For the DL management connections, this TLV is encapsulated in the compound DL service flow TLV Type = 146.

Type	Length	Value	Scope
[145/146].46	*variable*	HARQ channel index (1 byte each)	DSA-REQ, DSA-RSP, SBC-REQ, SBC-RSP

11.13.34 PDU SN Extended Subheader for HARQ Reordering TLV

This TLV is valid only in HARQ-enabled connection. It specifies whether PDU SN extended subheader should be applied by the transmitter on every PDU on this connection. This SN may be used by the receiver to ensure PDU ordering.

This counter should start at 0 and should be reset after HO/FBSS operations

The relevance connections of this parameter when appears in SBC-REQ/RSP messages are Basic, Primary, and Secondary CIDs (each should have its own PDU numbering). PDU SNs are enabled independently in the UL and DL directions. For the UL management connections, this TLV is encapsulated in the compound UL service flow TLV Type = 145. For the DL management connections, this TLV is encapsulated in the compound DL service flow TLV Type = 146.

Value of 0 in either of the messages means the endpoint does not support the PDU SN number for the specific connection. If both end points support PDU SN for the connection, the larger SN number should be chosen.

Type	Length	Value	Scope
[145/146].42	1	0: No support for PDU SN in this connection (default). 1: PDU SN (short) extended SH. 2: PDU SN (long) extended SH. 3–255: *Reserved*.	DSA-REQ, DSA-RSP, SBC-REQ, SBC-RSP

11.13.35 MBS contents IDs

MBS contents IDs values shall be composed of 2 byte-long MBS Contents IDs to distinguish the logical MBS connection for each MBS contents. MBS Contents IDs is vendor-specific and dependent on application-level implementation and is not specified in this standard.

A 1 byte-long Logical Channel ID, which pairs with Multicast CID in Extended_MBS_DATA_IE, is allocated to each 2 byte-long MBS Contents IDs in order that it is included in MBS content IDs value. For example, Logical Channel ID 0 is allocated to MBS Contents ID(0), Logical Channel ID 1 is allocated to MBS Contents ID(1) and so on. Logical Channel ID is used for MS to discriminate the MBS message in MBS data burst.

Type	Length	Value	Scope
[145/146].43	*variable* ($2 \times n$)	MBS Contents ID(0), MBS Contents ID(1), ... MBS Contents ID(n–1)	DSA-REQ DSA-RSP DSC-REQ DSC-RSP

11.13.36 ROHC Parameter

This compound parameter contains the ROHC channel parameters. All parameters pertaining to a specific ROHC channel shall be negotiated through a single ROHC Parameter compound TLV. Refer to RFC3095, 5.1.1, for the definition of these parameters.

Type	Length	Value	Scope
[145/146].47	*variable*	Compound	DSA-REQ, DSA-RSP DSC-REQ, DSC-RSP

11.13.36.1 ROHC Max Context ID

This TLV contains the ROHC parameter MAX_CID. Both entities may include this TLV. The responder shall not send a value that is larger than the value sent by the requestor. If the requestor omits this parameter, the responder shall include this parameter. If only one entity includes this parameter, then that value is the negotiated value. Otherwise, the negotiated value is the lesser of the two values sent by the entities.

Type	Length	Value	Scope
[145/146].47.1	2	Non-negative integer	DSA-REQ, DSA-RSP

11.13.36.2 Large Context IDs

This TLV contains the ROHC parameter LARGE_CIDS. Both entities may include this TLV. The responder shall not send a value that is larger than the value sent by the requestor. If the requestor omits this parameter, the responder shall include this parameter. If only one entity includes this parameter, then that value is the negotiated value. Otherwise, the negotiated value is the lesser of the two values sent by the entities.

Type	Length	Value	Scope
[145/146].47.2	1	0: FALSE (Small Context ID) 1: TRUE (Large Context ID) 2–255: *Reserved*	DSA-REQ, DSA-RSP

11.13.36.3 ROHC Profiles

This TLV contains the ROHC parameter PROFILES. Both entities may include this TLV. The responder shall not include profiles that are not included by the requestor. If the requestor omits this parameter, the responder shall include this parameter. If only one entity includes this parameter, then that set is the negotiated value. Otherwise, the negotiated set of profiles is the smallest set of two the sets sent by entities.

11.13.36.4 ROHC Feedback Channel

This TLV contains the ROHC parameter FEEDBACK_FOR. The value of this parameter is an SFID. If provided, this parameter indicates to which service flow the FEEDBACK_FOR channel is mapped. Only the BS may send this TLV containing a non-zero value. The MS indicates a request for a FEEDBACK_FOR

Type	Length	Value	Scope
[145/146].47.3	2n	A set of nonnegative integers, where each integer indicates a 16 bit profile identifier of a ROHC profile supported by the decompressor.	DSA-REQ, DSA-RSP

channel by omitting this TLV. If the BS receives a request for a FEEDBACK_FOR channel, it may respond with a new DSC transaction containing a proper value.

Type	Length	Value	Scope
[145/146].47.4	4	0x00000000: no associated ROHC feedback Otherwise: SFID for ROHC feedback.	DSA-REQ, DSA-RSP, DSC-REQ, DSC-RSP

11.13.36.5 ROHC MRRU

This TLV contains the ROHC parameter MRRU. Both entities may include this TLV. The responder shall not send a value that is larger than the value sent by the requestor. If either entity sends a value = 0, or if both entities omit this TLV, then segmentation shall not apply. If only one entity includes this value, then that value is the negotiated value. Otherwise, the negotiated value is the lesser of the two values sent by the entities.

Type	Length	Value	Scope
[145/146].47.5	2	0: no segmentation Otherwise: MRRU	DSA-REQ, DSA-RSP

11.13.37 Packet Error Rate (PER)

This TLV indicates the target packet error rate (PER) for the service flow as defined below. This PER could either be the PER as seen by the application (post ARQ and/or HARQ processing) or as seen on the airlink (before the application of ARQ and/or HARQ). The particular use of this TLV is left open to implementations and vendor differentiations. Some usage scenarios, however could be: to determine whether to enable HARQ or not; to determine whether to enable ARQ or not; to choose a more aggressive or more robust burst profile etc. Support for setting the PER using this TLV is optional for both BS and MS.

Type	Length	Value	Scope
[145/146].48	1	MSB (bit 7): 0 – PER measured by the application, post-ARQ and post-HARQ process 1 – PER measured on the airlink, before the application of ARQ and HARQ Bit 6: 0 – Interpret bits 0–5 as an integer %, i.e., if bits 0–5 are the binary representation of the integer N, then the PER = N/100 (= N%) 1–Interpret bits 0–5 as 10 times a negative exponent of 10, i.e., if bits 0–5 are the binary representation of the integer N, then the PER = $10^{-N/10}$ LSB 6 bits (bits 0–5): PER value If bit 6 =0, [0 to 63%] PER If bit 6=1, [~$5x10^{-7}$ to $1x10^{-0}$] PER	DSA-REQ/RSP, DSC-REQ/RSP

11.13.38 PSC assignment

The PSC Assignment value specifies the Power_Saving_Class_ID of an existing PSC to which the CID of the service flow shall be assigned. This TLV may be included only when the DSA or DSC protocol message activates the service flow (i.e., includes an active QoS parameter set).

If the DSA or DSC protocol activates the service flow and the PSC Assignment TLV is present in the BS's DSA/DSC-REQ/RSP and specifies the Power_Saving_Class_ID of an existing PSC, then the CID of the service flow is added immediately to the PSC at the time the service flow is activated. No explicit PSC re-definition is needed.

Type	Length	Value	Scope
[145/146].49	1	Bit 0–5: The Power_Saving_Class_ID of the PSC to which the CID of this service flow is to be added. Bit 6–7: *Reserved*	DSA-REQ, DSA-RSP, DSC-REQ DSC-RSP

11.13.39 Group parameter Create/Change TLV

Group Parameter Create/Change provides a method to allow an MS or BS to create or change a number of service flows, in a single DSx message exchange.

Name	Type	Length	Value	Scope
Group parameter Create/ Change	[145/146].50	*variable*	Compound Only one instance of the Group parameter Create/Change TLV may be included in any DSx message	DSA-REQ, DSA-RSP, DSC-REQ DSC-RSP

Name	Type	Length	Value
Common Parameters	[145/146].50.1	*variable*	Common Parameters is a compound TLV value that encapsulates the common related service flow management encodings that are common to all service flows specified in this Group parameter Create/Change TLV. Only common related service flow encodings shall be included in this TLV. All the rules and settings that apply to the service flow management encodings when used in a DSA or DSC message apply to the contents encapsulated in this TLV. If included in the Group parameter Create/Change TLV, Common Parameters shall be the first attribute of the Group parameter Create/Change TLV. Common Parameters shall be included only once in a Group parameter Create/Change TLV.

Name	Type	Length	Value
Qty SFID request	[145/146].50.2	1	Qty SFID request is the quantity of service flows, of the same common parameter set configuration, that the MS is requesting. Qty SFID request shall only be sent by the MS, only as the last attribute of a Group parameter Create/Change TLV, and only in a DSA-REQ.

Name	Type	Length	Value
SFID List	[145/146].50.3	n×4	List of n SFIDs. See 11.13.1.

Name	Type	Length	Value
SFID parameter list	[145/146].50.4	*variable*	SFID parameter list is a compound TLV value that encapsulates an SFID and associated noncommon service flow management encodings for that service flow, specified in this Group parameter Create/Change TLV. See the following Table for the format of the SFID parameter list. All the rules and settings that apply to the service flow management encodings when used in a DSA or DSC message apply to the contents encapsulated in this TLV. If included in the Group parameter Create/Change TLV, SFID parameter list shall be the last attribute. SFID parameter list may be included more than once in a DSx Group Create/Change TLV.

Name	Length	Value
SFID	4	See 11.13.1 If the SFID value is unassigned, the MS shall use an SFID value of '0', though each iteration of 'SFID' in SFID parameter list represents a separate and individual service flow.
non-Common Parameters	*variable*	non-Common Parameters is a compound TLV value that encapsulates the non-common related service flow management encodings that are specific to individual service flows specified in this Group parameter Create/Change TLV. Only non-common related service flow management encodings shall be included in this TLV. All the rules and settings that apply to the service flow management encodings when used in a DSA or DSC message apply to the contents encapsulated in this TLV.

Packet Classification Rules and PHS Rules may be specified partly in the Common Parameters TLV (common part) and partly in the SFID parameter list TLV (specific part). In this case both parts of a rule are related to each other by means of their Index, Packet Classification Rule Index (11.13.18.3.3.14) and PHSI (11.13.18.3.5.1) respectively, that is to be included in both parts

11.13.40 Aggregated HARQ channels TLV

The Aggregated HARQ channels TLV defines the HARQ channels which are used for aggregation in group 1 and group 2 of the H-FDD frame structure. The HARQ channels which are defined to be aggregated are encoded/decoded as a single burst.

Type	Length	Value	Scope
[145/146].51	*variable*	$ACID_1$, $ACID_2$ (1 byte for each pair of ACIDs)	DSA-REQ, DSA-RSP, DSC-REQ, DSC-RSP

$ACID_1$, $ACID_2$
The HARQ channel identifier corresponding to ACID1 is used for the first part of the burst, while the HARQ channel identifier corresponding to ACID2 is used for the second part of the burst.

When BS and MS negotiate the aggregated HARQ channels, the transmitter shall separate a single burst into the resources corresponding to the aggregated HARQ channels at the physical layer, and the receiver shall aggregate the resources corresponding to the HARQ channels at the physical layer as a single burst prior to decoding.

11.13.41 Priority indication

The value of this TLV, if present, indicates the associated flow is used for emergency purposes defined by local regulations. The exact conditions for when this TLV shall be included and the value that it shall convey are outside the scope of this standard. The behavior of the MS and BS when receiving this TLV is also outside the scope of this standard.

11.13.42 Regional Emergency Indication parameter

The value of this parameter, if present, indicates the associated flow is used for emergency purposes. The emergency indication parameter shall take precedence over any conflicting service flow QoS parameter.

Type	Length	Value	Scope
[145/146].52	1	Bit 0: Emergency indication Bits 1–7: *Reserved*	DSx-REQ, DSx-RSP

Type	Length	Value	Scope
[145/146].53	1	Bit 0–3: indicates the class of un-scheduled alert. When the bit is set to 1, it indicates the type of alert to be transmitted in this service flow. Bit 0: Priority 0 Bit 1: Priority 1 Bit 2: Priority 2 Bit 3: Priority 3 Bits 4–7: *Reserved*	DSx-REQ, DSx-RSP DSx-ACK

11.14 DREG-CMD/REQ message encodings

Name	Type	Length	Value	Scope
REQ-duration	2	1	See 6.3.2.3.26	DREG-CMD
Idle Mode Retain Information	4	1	Provided as part of this message indicative only. Network reentry from idle mode process requirements may change at time of actual reentry. For each bit location, a value of 0 indicates the information for the associated reentry management messages shall not be retained and managed; a value of 1 indicates the information for the associated reentry management message shall be retained and managed. Bit 0: Retain MS service and operational information associated with SBC-REQ/RSP messages. Bit 1: Retain MS service and operational information associated with PKM-REQ/RSP messages. Bit 2: Retain MS service and operational information associated with REG-REQ/RSP messages. Bit 3: Retain MS service and operational information associated with network address. Bit 4: Retain MS service and operational information associated with time of day. Bit 5: Retain MS service and operational information associated with TFTP messages. Bit 6: Retain MS state information. The information retained by setting bit 6 does not include the information associated with SBC-REQ/RSP messages, PKM-REQ/RSP messages, REG-REQ/RSP messages, network address, time of day, and TFTP messages unless otherwise specified by setting one or more bits 0–5. This information does not include blocks currently in the ARQ window or associated timers. The MS state information does include SFIDs and related description (QoS descriptors and CS classifier information) for all Service Flows that the MS has currently established as well as any SAs with their related keying information. Bit 7: Consider Paging Preference of each Service Flow in resource retention. Bit 7 is meaningful when Bit 2 and Bit 6 have a value of 1. If Bit 2, Bit 6 and Bit 7 is 1, is retained for Service Flows with positive Paging Preference. If Bit 2 and Bit 6 are 1 and Bit 7 is 0, MS service and operational information associated with MS state information is retained for all Service Flows.	DREG-CMD, DREG-REQ
Paging Cycle Request	52	2	Requested cycle in which the paging message is transmitted within the paging group.	DREG-REQ

11.15 HO management encodings

11.15.1 Resource_Retain_Time

The Resource_Retain_Time is the duration for MS's connection information that will be retained in serving BS. This value is measured in 100 ms. If this value is set to 0, the serving BS shall retain the MS's connection information during Resource Retain Time negotiated at early registration stage. If this value is set to nonzero, it is the proposed Resource Retain Time by serving BS and the serving BS shall retain the MS's connection information during that time after reception of MOB_HO-IND message (HO_IND_type=0b00).

Type	Length	Value	Scope
1	2	0: The serving BS shall retain the MS's connection information during Resource Retain Time negotiated at registration stage. 1–65535: Resource Retain Time (100 ms unit)	MOB_BSHO-REQ MOB_BSHO-RSP

11.15.2 Alternate Target BS

The MS may include the Alternate_Target_BS TLV in a MOB_HO-IND message in which the HO_IND_type is set to 0b10 (HO reject, see 6.3.2.3.50) in order to indicate its preferred HO target. If the MS includes this TLV, the MS shall set bits 63-16 to the BS_ID of the proposed HO target, and shall set bits 15-0 to the preamble of the target BS.

Type	Length	Value	Scope
2	8	Bits 63–16: Target_BS_ID Bits 15–0: Preamble Index/Subchannel Index	MOB_HO-IND

11.15.3 Additional Action Time

Instead of providing a single action time, the network may offer specific action times according to the Neighbor BS listed in MOB_BSHO-REQ or MOB_BSHO-RSP to increase the likelihood of successful fast ranging at a Target BS. In this case, the BS may include the "Additional Action Time" TLV in the MOB_BSHO-REQ or MOB_BSHO-RSP messages that the MS may use in addition to the Action Time indicated in the message. If this TLV is not present in the message, then the single Action Time value applies. An Action Time value of zero indicates no opportunity to allocate Fast Ranging IE at the respective target BS.

Type	Length	Value	Scope
3	*variable;* *N_Recommended* × *8* bits	Compound action time values for *N_Recommended* target base stations in the same sequence as presented in the message. Unit = frames.	MOB_BSHO-REQ, MOB_BSHO-RSP

The transmission order of Additional Action Time shall match the order of Neighbor BSID listed in the message.

11.16 Sleep mode management encodings

11.16.1 Co-located-coexistence-enabled

MS may include the Co-located-Coexistence-Enabled TLV in the MOB_SLP-REQ to indicate if coexistence behavior of the PSC is requested when the PSC is activated. If the BS supports the Co-located Coexistence Capability, the BS shall include this TLV in the MOB_SLP-RSP message transmitted in response to the MOB_SLP-REQ message containing this TLV.

Type	Length	Value	Scope
1	1	Bit 0: Co-located coexistence mode 1 Bit 1: Co-located coexistence mode 2 Bit 2: Sleep mode follows the MAP relevance for co-located coexistence. Bit 3: Uplink band AMC for co-located coexistence Bit 4: Indication for band AMC subchannel allocations 0b0: Subchannel allocation shall be to the lowermost frequencies. 0b1: Subchannel allocation shall be to the uppermost frequencies. Bit 5–7: reserved	MOB_SLP-REQ, MOB_SLP-RSP

Bit 2 can be set to 1 only if bit 0 is set to 1 and bit 1 is set to 0.

Bit 4 shall be interpreted by the BS only if bit 3 is set to 1.

Only one instance of this Co-located-Coexistence-Enabled TLV should be added to the MOB_SLP-REQ and MOB_SLP-RSP messages.

11.16.2 Sleep mode functions enabled in H-FDD

Type	Length (bits)	Value	Scope
2	1	Bit 0: Sleep mode follows MAP relevance enabled Bit 1–7: *Reserved*	MOB_SLP-REQ, MOB_SLP-RSP

When bit 0 is set to 1, then the sleep mode follows MAP relevance (see 6.3.20.9). This bit is only relevant when MS and BS have successfully negotiated support for this feature during registration.

11.17 MOB_PAG-ADV management message encodings

The encoding described in this subclause is specific to the MOB_PAG-ADV message (6.3.2.3.51).

11.17.1 CDMA code and transmission opportunity assignment

The CDMA Code And Transmission Opportunity Assignment field indicates the assigned code and transmission opportunity for an MS that is paged to use over dedicated CDMA ranging region.

Type	Length (bits)	Value	Scope

150	variable;
	8 + N_assign × 16)
		Bits 0–7: N_assign
		Subsequent (N_assign × 16) bits:
		for (*i* = 0, *i* < N_assign, *i*++) {
		8-bits code index assigned to an MS that is paged
		8-bits transmission opportunity offset assigned to an MS that is paged
		}
			OFDMA

11.17.2 Page-Response window

The Page-Response Window field TLV indicates the Page-Response window for an MS who is paged to transmit the assigned code for CDMA ranging channel.

Type	Length	Value	PHY scope
152	1	Page-Response window, in frames	OFDMA

11.18 MOB_NBR-ADV management message encodings

The encodings described in this subclause are specific to the MOB_NBR-ADV message (6.3.2.3.42).

11.18.1 MOB_NBR-ADV message encodings

Table 609—MOB_NBR-ADV encodings

Name	Type (1 byte)	Length (1 byte)	Notes
DCD_settings	1	*variable*	The DCD_settings is a compound TLV value that encapsulates TLVs from the neighbor BS' DCD message that may be transmitted in the advertised BS downlink channel. This information is intended to enable fast synchronization of the MS with the advertised BS downlink. The DCD settings fields shall contain only neighbor's DCD TLV values that are different from the serving BS corresponding values. Neighbor BS DCD TLVs that are already represented within the fixed fields of he MOB_NBR-ADV message (e.g., BS_EIRP, DCD configuration change count, neighbor BSID) shall be excluded. For values that are not included, the MS shall assume they are identical to the serving BSs corresponding values. If DCD/UCD Reference Indicator = 0 and the set of Triggers defined in the neighbor BS's DCD is different from the set of Triggers in the Serving BS's DCD, the serving BS includes the complete set of Trigger TLVs in the DCD settings compound TLV for the neighbor BS in the MOB_NBR-ADV. The MS uses this set of triggers defined in the DCD settings compound TLV when constructing the new DCD once the MS completes handover to the target. If no trigger TLVs are defined, the MS uses the trigger TLVs defined in the serving BS's DCD. If DCD/UCD Reference Indicator = 1 and the set of Triggers defined for a neighbor BS's DCD is different from the set of Triggers defined for the BS preceding the neighbor's BS in the MOB_NBR-ADV, the serving BS includes the complete set of Trigger TLVs in the DCD settings compound TLV for the neighbor BS in the MOB_NBR-ADV. When the MS constructs the DCD once the MS completes handover to the target. It uses one of the following sets of triggers: 1. MS uses the set of triggers defined in the DCD settings TLV for the neighbor BS in the MOB_NBR-ADV. 2. If no triggers are defined in the DCD settings TLV for the neighbor BS in the MOB_NBR-ADV, the MS uses the triggers defined in the DCD settings TLV for the previous neighbor BS in the MOB_NBR-ADV (only if DCD/UCD Reference Indicator = 1). 3. If no triggers are defined in the DCD settings TLV for the neighbor BS or the previous neighbor BS (if DCD/UCD Reference Indicator = 1) in the MOB_NBR-ADV, the MS uses the set of triggers defined in the DCD settings TLV for the serving BS.

UCD_settings	2	*variable*	The UCD_settings is a compound TLV that encapsulates TLVs from the neighbor BS' UCD message that may be transmitted in the advertised BS downlink channel. This information is intended to enable fast synchronization of the MS with the advertised BS uplink. The UCD settings fields shall contain only neighbor's UCD TLV values that are different from the serving BS's corresponding values or from the UCD_settings of the previous neighbor BS, whichever is referenced by the DCD/ UCD Reference Indicator in the PHY Profile ID. Neighbor BS UCD TLVs that are already represented within the fixed fields of he MOB_NBR-ADV message (e.g., UCD configuration change count) shall be excluded. For values that are not included, the MS shall assume they are identical to the serving BS's corresponding values.
Neighbor BS trigger	4	*variable*	The Neighbor BS trigger is a compound TLV that defines a trigger (Table 610). The resulting set of triggers that the MS shall apply to this neighbor BS is specified in 6.3.2.3.42, Table 145. Neighbor BS trigger TLVs are included in MOB_NBR-ADV message, only if the resulting set of triggers is different from trigger set that is defined in the serving BS's DCD message or from the Neighbor BS trigger set for the preceding neighbor BS, whichever is referenced by the Trigger Reference Indicator in the PHY Profile ID.

The neighbor BS trigger TLV (type 4) in Table 609 is encoded using the description in Table 610.

Table 610—Neighbor BS Trigger TLV description

Name	Type	Length (1 byte)	Value
Type/function/action	4.1	1	See Table 611 for description.
Trigger value	4.2	1	Trigger value is the value used in comparing measured metric for determining a trigger condition.
Trigger averaging duration	4.3	1	Trigger averaging duration is the time measured in number of frames over which the metric measurements are averaged.

Table 611—Neighbor BS Trigger; Type/Function/Action

Name	Length (1 byte)	Value
Type	2 bits (MSB)	Trigger metric type: 0x0: CINR metric 0x1: RSSI metric 0x2: RTD metric 0x3: *Reserved*
Function	3 bits	Computation defining trigger condition: 0x0: *Reserved* 0x1: Metric of neighbor BS is greater than absolute value 0x2: Metric of neighbor BS is less than absolute value 0x3: Metric of neighbor BS is greater than sum of serving BS metric and relative value 0x4: Metric of neighbor BS is less than sum of serving BS metric and relative value 0x5–0x7: *Reserved* NOTE—When type 0x1 is used together with function 0x3 or 0x4, the threshold value shall range from -32 dB (0x80) to +31.75 dB (0x7F). When type 0x1 is used together with function 0x1 or 0x2, the threshold value shall be interpreted as an unsigned byte with units of 0.25 dB, such that 0x00 is interpreted as –103.75 dBm and 0xFF is interpreted as –40 dBm.
Action	3 bits (LSB)	Action performed upon reaching trigger condition: 0x0: *Reserved* 0x1: Respond on trigger with MOB_SCN-REP 0x2: Respond on trigger with MOB_MSHO-REQ 0x3–0x7: *Reserved*

If Neighbor BS Trigger TLVs are included in the MOB_NBR-ADV message, the MS may ignore Neighbor BS Trigger TLVs having a metric that the MS and BS have not agreed to support during SBC-REQ/RSP message exchange.

When the mean value of the MS's measurements over the averaging interval of a trigger defined by a Neighbor BS Trigger TLV meets the trigger condition as specified by the type, function, and value of the trigger, the MS shall invoke the trigger's specified action. Whenever the trigger condition of a trigger is met, the MS shall invoke the action of the trigger. If more than one trigger conditions are met simultaneously the MS shall invoke the action of at least one of the triggers.

The MS may transmit MOB_MSHO-REQ and MOB_SCN-REQ messages autonomously, i.e., in addition to messages prompted by trigger conditions.

11.18.2 PHY mode ID

The PHY Mode ID field is shown in the following table.

Name	Type	Length	Value	PHY scope
PHY Mode ID	22	2	Refer to Table 612 and Table 613 for the PHY Mode ID fields description of the other PHYs	OFDM, OFDMA

The PHY Mode ID fields for OFDM PHYs and for OFDMA PHYs are described in Table 612 and Table 613, respectively.

Table 612—PHY Mode ID fields for OFDM PHY

Item	Size (bit)	Notes
Bandwidth	7	Channel bandwidth in units of 125 kHz.
FFT Size	3	0b011: 256 0b000-0b010, 0b100-0b111: *Reserved*
Cyclic Prefix (CP)	2	0b00: 1/4 0b01: 1/8 0b10: 1/16 0b11: 1/32
Frame duration code	4	0b0000: 2.0 ms 0b0001: 2.5 ms 0b0010: 4 ms 0b0011: 5 ms 0b0100: 8 ms 0b0101: 10 ms 0b0110: 12.5 ms 0b0111: 20 ms 0b1000–0b1111: *Reserved*

Table 613—PHY Mode ID fields for OFDMA PHY

Item	Size (bit)	Notes
Bandwidth	8	Channel bandwidth in units of 125 kHz.
FFT Size	2	0b00=2048, 0b01=1024, 0b10=512, 0b11=128

Table 613—PHY Mode ID fields for OFDMA PHY *(continued)*

Item	Size (bit)	Notes
Cycle prefix (CP)	2	0b00: 1/4 0b01: 1/8 0b10: 1/16 0b11: 1/32
Frame duration code	4	0b0000: 2.0 ms 0b0001: 2.5 ms 0b0010: 4 ms 0b0011: 5 ms 0b0100: 8 ms 0b0101: 10 ms 0b0110: 12.5 ms 0b0111: 20 ms 0b1000–0b1111: *Reserved*

11.19 MOB_SCN-REP message encodings

Name	Type	Length	Value
Ranging_Parameters_Validity_Time	1	1	Estimated number of frames starting from the frame following the reception of the MOB_SCN-REP message, in which channel parameters learned by the MS during Association of specific BS stay valid and can be reused during future Network Reentry to the BS without additional CDMA-based initial ranging. A value of zero in this parameter signifies that this parameter should be ignored

11.20 MOB_SCN-REQ/RSP message encodings

11.20.1 Recommended start frame

Name	Type	Length	Value	Scope
Recommended start frame	1	1	Represents the 8 least significant bits of the absolute frame number for which the MS recommends the first Scanning Interval to start.	MOB_SCN-REQ

11.20.2 Sleep mode reactivation information

When the start of the scanning procedure deactivates the Power Saving Class of Type I associated with the MS's Basic CID, the MS may request the BS to automatically reactivate the PSC after completion of the scanning procedure, and the BS shall specify the frame offset from the end of the scanning procedure to the start of the reactivated sleep mode operation. The BS shall not include Sleep Mode Reactivation Information TLV in the MOB_SCN-RSP if the MS has not requested it. Also, if the BS wants to deny the MS request for

automatic PSC reactivation, the BS shall not include the Sleep Mode Reactivation Information TLV in the MOB_SCN-RSP.

Type	Length	Value	Scope
2	2	Bit 0–15: The frame offset from the end of the last scanning interval in scan mode to the start frame of the reactivated PSC as recommended by the MS or configured by the BS, where offset 0 specifies the first frame following the last scanning interval..	MOB_SCN-REQ MOB_SCN-RSP

11.21 LBS-ADV message encodings

11.21.1 Absolute Position TLV (Long Format)

This TLV is used to provide the absolute position of a BS.

Name	Type	Length (bytes)	Value
Absolute Position (Long Format)	1	15	See Table 614

Table 614—Contents of the Absolute Position (Long Format) TLV

Field	Size	Description
Longitude	40 bits	Bits 0–5: longitude resolution 1-34 - number of valid bits in fixed-point value of longitude value 35 - LBS not supported Others - *Reserved* Bits 6–14: longitude integer Bits 15–39: longitude fraction
Latitude	40 bits	Bits 0–5: latitude resolution 1-34 - number of valid bits in fixed-point value of latitude value 35 - LBS not supported Others - *Reserved* Bits 6–14: latitude integer Bits 15–39: latitude fraction
Altitude	40 bits	Bits 0–3: altitude type 1-meters 2-floors Others - *Reserved* Bits 4–9: altitude resolution 1-30 - number of valid bits in fixed-point value of altitude value 31 - LBS not supported Others - *Reserved* Bits 10–31: altitude integer Bits 32–39: altitude fraction

The latitude, longitude and altitude within the Absolute Position (Long Format) TLV indicate the BS location in latitude, longitude, and altitude that are based on the LCI (Location Configuration Information) format as defined in IETF RFC 3825. Latitude and longitude are each represented as a 34 bit fixed-point

2s-complement number, consisting of 9 bits of integer and 25 bits of fraction. Altitude is represented as a 30 bit fixed-point 2s-complement number with 22 bits of integer and 8 bits of fraction. Latitude and longitude should be normalized to within ± 90 degrees and ± 180 degrees, respectively. Each field also includes resolution bits that define the number of valid bits in the fixed-point value. Here are the definition of 2s-complement number.

— Positive numbers
  1) Latitude - North
  2) Longitude - East
  3) Altitude - above ground
— Negative numbers
  1) Latitude - South
  2) Longitude - West
  3) Altitude - below ground

11.21.2 Absolute Position TLV (Short Format)

This TLV is used to provide the absolute position of a BS.

Name	Type	Length (bytes)	Value
Absolute Position (Short Format)	2	6 or 8	See Table 615

Table 615—Contents of the Absolute Position (Short Format) TLV

Field	Size	Description
Longitude	24 bits	Longitude expressed in 2^{-15} parts of a degree
Latitude	24 bits	Latitude expressed in 2^{-16} parts of a degree
Altitude	16 bits	Bits 0–15: altitude in meters above sea level

In the Absolute Position (Short Format) TLV, longitude and latitude are expressed as 2^{-15} and 2^{-16} parts of a degree respectively using 2's complement notation to express negative (West or South) values. The altitude field is optionally included. The MS can determine the presence of the Altitude field by using the length field. Altitude is expressed in meters above sea level using 2's complement notation to express negative (below sea level) values.

11.21.3 Relative Position TLV

This TLV shall be used to provide the absolute position of a BS relative to a reference point.

Name	Type	Length (bytes)	Value
Relative Position	3	4 or 6	See Table 616

Table 616—Contents of the Relative Position TLV

Field	Size	Description
Longitude	16 bits	Distance east of reference point in meters
Latitude	16 bits	Distance north of reference point in meters
Altitude	16 bits	Distance above reference point in meters

The Relative Position TLV is used to indicate the positions of additional BSs as offsets in meters from the Latitude, Longitude and Altitude values of the first Absolute Position TLV in the message. The altitude field is optionally included. The MS can determine the presence of the Altitude field by using the length field. Negative values are expressed using 2's complement notation to denote positions South, West and below the reference position. The scaling of these numbers allows the position of a BS within 32 km from the first BS to be described.

11.21.4 GPS Time TLV

This TLV shall be used to provide the GPS time.

Name	Type	Length (bytes)	Value
GPS Time	4	5	See Table 617

Table 617—Contents of the GPS Time TLV

Field	Size (bits)	Description
GPS time in units of frame duration	22	GPS time, expressed in units of frame duration T_f, modulo 2^{22}
GPS frame transmission time offset	10	A signed integer expressing the difference between the OFDMA frame transmission time and the nearest integer multiple of T_f, expressed in units of 2 nanoseconds (ns). Negative values express late transmission. This integer is encoded in two's complement notation. The value 0x200 signals that the offset in absolute value is greater than $(2^9 - 1) \times 2$ ns.
GPS time accuracy	5	This fields encodes an upper bound of the accuracy $\alpha = 2^p$ picoseconds, by providing the binary representation of p. For example, 0b01110 encodes an accuracy less than or equal to $\alpha = 2^{14}$ ps =16.384 ns. Conversely, if the accuracy is 8 ns, a minimal upper bound is encoded by the bit representation of $p = \lceil \log_2(8000) \rceil = 13$, i.e., 0b01101
Reserved	3	

In the following equations:

— T_f is the frame duration;
— t_{TX} is the time in units of seconds relative to GPS time (i.e., where time 0 denotes January 6th, 1980, 12:00 AM GMT) of the start time of the frame that carries this TLV;

— t_{MS} is the time in units of seconds at the MS according to its internal clock when it receives the LBS-ADV message;
— n_f is the frame number in which the LBS-ADV message is transmitted;
— m is the modulus used, i.e., $m = 2^{22} \times T_f$;
— n_0 is the value transmitted in the "GPS time in units of frame duration" field;
— k is the value transmitted in the "GPS frame transmission offset" field;
— α is the value transmitted in the "GPS time accuracy" field.

GPS time in units of frame duration

This parameter shall be set to a value n_0, where $n_0 = \lfloor t_{TX}/T_f - n_f + 0.5 \rfloor \times mod(m/T_f)$.

GPS frame transmission offset

This parameter shall be set to a value k, where $|2k \text{ ns} + t_{TX} - \lfloor t_{TX}/T_f + 0.5 \rfloor T_f| < \alpha$. If $||k| > 2^9 - 1$, the BS shall set this field to 0x200.

GPS time accuracy

This parameter shall be set to a value α, where $n_0 = \lfloor t_{TX}/T_f - n_f + 0.5 \rfloor \times mod(m/T_f)$.

The GPS Time TLV informs the receiving MS of the precise time at which the BS transmits frame number 0, which the MS may use to calibrate its own internal clock in reference to the GPS time standard. If $|t_{TX} - t_{MS}| < m/2$, the MS computes t_{TX} as follows: $t_{TX} = (n_0 + n_f)T_f + 2k \text{ ns} + \varepsilon + Nm$, where

$$N = \left\lfloor \frac{t_{MS} - (n_0 + n_f)T_f}{m} + 0.5 \right\rfloor, \text{ and } |\varepsilon| < \alpha .$$

The GPS Time TLV is used if the BS's frame time is synchronized with the GPS clock. This may be particularly valuable for determining GPS satellite signal search windows in mobiles equipped to detect GPS satellites. GPS frame transmission time offset allows the MS to use DL Frame arrival times as timing signals aligned with GPS time. GPS Time Accuracy aids the MS in estimating how much error with respect to GPS time the BS may have when using this calibration.

11.21.5 Frequency Accuracy TLV

This TLV shall be used to provide the frequency accuracy information.

Name	Type	Length (bytes)	Value
Frequency information	5	1	BS transmit frequency accuracy in ppm. For values in range 0x00-0xFE, frequency max error is ± [(value+1)×0.01 ppm]. For example, if value = 0x20, max TX frequency error is ± 0.33 ppm. The BS shall send the value 0xFF to indicate that it does not specify transmit frequency accuracy for location-based service.

12. System profiles

This clause defines system profiles listing sets of features to be used in typical implementation cases. Each profile is assigned an identifier for use in documents such as PICS proforma statements. These profiles do not alter the mandatory or optional nature of features specified elsewhere in this standard. Compliance to a profile depends on compliance with the underlying radio interface specification in the appropriate variant. In addition, features specified as "required" in a profile are required for compliance to that profile. Likewise, features specified as "conditionally required" in a profile are required for compliance to that profile under the specified conditions.

12.1 WirelessMAN-SC Release 1.0

Table 618 defines system profiles for systems operating with the WirelessMAN-SC air interface.

Table 618—Profile definitions

Identifier	Description
profM1	Basic ATM MAC profile
profM2	Basic packet MAC profile
profP1	25 MHz channel PHY profile
profP1f	25 MHz channel PHY profile – FDD
profP1t	25 MHz channel PHY profile – TDD
profP2	28 MHz channel PHY profile
profP2f	28 MHz channel PHY profile – FDD
profP2t	28 MHz channel PHY profile – TDD

12.1.1 WirelessMAN-SC MAC system profiles

This subclause defines MAC profiles for systems operating with the WirelessMAN-SC air interface.

12.1.1.1 Basic ATM MAC system profile

Profile identifier: profM1.

Mandatory features:

— Support of PVCs.
— Support of VC-switched connections.
— Support of VP-switched connections.
— ATM PHS is mandatory as a capability, but may be turned on or off on a per-connection basis.
— IPv4 on the secondary management connection.
— Packing of multiple ATM cells into a single MAC PDU is mandatory as a capability, but may be turned on or off on a per-connection basis.
— SDU fragmentation on the primary management and secondary management connections.

Conditionally mandatory features:

— If nrtPS or BE service is supported, then the SS responding to broadcast polling is mandatory.
— If multicast polling groups are supported, multicast polling shall be supported.

12.1.1.2 Basic Packet MAC system profile

Profile identifier: profM2.

Mandatory features:

— Support of provisioned connections.
— IPv4 support on transport connection.
— Classification of packets in the SS based on the incoming physical port.
— Reception of multiple SDUs packed into a single MAC PDU is mandatory as a capability, but may be turned on or off on a per-connection basis.
— Fragmentation of SDUs is mandatory as a capability, but may be turned on or off on a per-connection basis.

Conditionally mandatory features:

— If nrtPS or BE service is supported, then the SS responding to broadcast polling is mandatory.
— If multicast polling groups are supported, multicast polling shall be supported.

12.1.1.3 Conventions for MAC management messages for profiles profM1 and profM2

The following rules shall be followed when reporting parameters in MAC Management messages:

— Service Class Names should not be used.
— No TLVs besides HMAC Tuples shall be reported back in DSA-RSP and DSC-RSP messages.
— No TLVs besides HMAC Tuples shall be reported back in DSA-ACK messages.
— DSC-REQ messages shall not contain Request/Transmission Policy, Fixed vs. Variable Length SDU Indicator, SDU Size, ATM Switching, or Convergence Sublayer Specification TLVs.

12.1.1.4 MAC management message parameter transmission order

The following subclauses define the order in which systems meeting profiles profM1 and profM2 shall transmit the TLV encoded parameters for mandatory features in the respective messages. Systems implementing either profile shall only include the parameters listed under the respective message in its transmission of these messages plus any parameters necessary for optional features. Parameters for optional features shall occur after those listed for support of mandatory features. Parameters with defined default values should be omitted if the desired value coincides with the default one. PHY specific messages are described in 12.1.2.

12.1.1.4.1 DCD

The parameters of the DCD message are PHY profile specific.

12.1.1.4.2 DL-MAP

This message contains no TLV encoded information.

12.1.1.4.3 UCD

The parameters of the UCD message are PHY profile specific.

12.1.1.4.4 UL-MAP

This message contains no TLV encoded information.

12.1.1.4.5 RNG-REQ

— Requested Downlink Burst Profile
— SS MAC Address
— Ranging Anomalies

12.1.1.4.6 RNG-RSP

If ranging status equals “success” or “continue”

— Ranging Status
— Timing Adjust (default to 0)
— Power Adjust (default to 0)
— Downlink Operational Burst Profile (only if changed)
— SS MAC Address (only on CID 0x0000)
— Basic CID (only on CID 0x0000)
— Primary Management CID (only on CID 0x0000)
— Uplink Channel Override (only if allowed by PHY profile)

If ranging status equals “abort”

— Ranging Status
— SS MAC Address (only on CID 0x0000)
— Downlink Frequency Override (if needed)

12.1.1.4.7 REG-REQ

— Vendor ID Encoding (optional)
— CID Support
— DSx Flow Control (default = no limit)
— MCA Flow Control (default = no limit)
— IP version (default = IPv4)
— MAC CRC support (default = support)
— Multicast Polling Group CID support (default = 4)
— Convergence Sublayer Support (1 instance for each CS supported)
— Maximum number of classifiers (default = 0, no limit)
— PHS support (default = 0, no PHS support)
— HMAC Tuple

12.1.1.4.8 REG-RSP

— Secondary Management CID
— Uplink CID Support
— Vendor ID Encoding (if present in REG-REQ)
— PKM Flow Control (if present in REG-REQ or changed from default)
— DSx Flow Control (if present in REG-REQ or changed from default)

— MCA Flow Control (if present in REG-REQ or changed from default)
— IP version (if present in REG-REQ or changed from default)
— MAC CRC support (if present in REG-REQ or changed from default)
— Multicast Polling Group CID support (if present in REG-REQ or changed from default)
— Vendor-specific information (Compound, only allowed if Vendor ID present in REG-REQ, and extensions provided)
— Vendor ID
— Vendor-specific extensions
— HMAC Tuple

12.1.1.4.9 PKM-REQ: Auth Info

— CA-Certificate

12.1.1.4.10 PKM-REQ: Auth Request

— SS-Certificate
— Security Capabilities
— Version (default = 1)
— Cryptographic-Suite-List (default is that both no encryption and 56-bit DES are supported, no data authentication, and 3-DES EDE with 128-bit key)
— SAID

12.1.1.4.11 PKM-REQ: Key Request

— Key Sequence Number
— SAID
— HMAC-Digest

12.1.1.4.12 PKM-RSP: SA Add

— Key-Sequence-Number
— SA-Descriptor(s)
— SAID
— SA-Type
— Cryptographic Suite
— HMAC-Digest

12.1.1.4.13 PKM-RSP: Auth Reply

— AUTH-Key
— Key-Lifetime
— Key-Sequence-Number
— SA-Descriptor(s)
— SAID
— SA-Type
— Cryptographic Suite

12.1.1.4.14 PKM-RSP: Auth Reject

— Error Code
— Display String (optional)

12.1.1.4.15 PKM-RSP: Key Reply

— Key Sequence Number
— SAID
— TEK-Parameters (Older)
— TEK
— Key Lifetime
— Key Sequence Number
— CBC-IV
— TEK-Parameters (Newer)
— TEK
— Key Lifetime
— Key Sequence Number
— CBC-IV
— HMAC-Digest

12.1.1.4.16 PKM-RSP: Key Reject

— Key Sequence Number
— SAID
— Error Code
— Display String (optional)
— HMAC-Digest

12.1.1.4.17 PKM-RSP: Auth Invalid

— Error Code
— Display String (optional)

12.1.1.4.18 PKM-RSP: TEK Invalid

— Key Sequence Number
— SAID
— Error Code
— Display String (optional)
— HMAC-Digest

12.1.1.4.19 DSA-REQ: BS Initiated Service Addition

— Uplink Service Parameters
— Service Flow ID
— Transport CID
— Target SAID
— QoS Parameter Set Type
— Service Flow Scheduling Type
— Request/Grant Transmission Policy
— Convergence Sublayer Specification
— Fixed vs Variable Length SDU Indicator (default = variable)
— SDU Size (required if fixed, forbidden if variable SDU)
— Maximum Sustained Traffic Rate
— Minimum Reserved Traffic Rate (default = 0 for BE, Max Sust Rate for UGS, required for rtPS and nrtPS)
— Maximum Traffic Burst (required for rtPS and nrtPS, excluded otherwise)
— Traffic Priority (optional, BE only)

— Tolerated Jitter (optional)
— Maximum Latency (optional)
— Convergence Sublayer Specific Parameters (see 12.1.1.5 and 12.1.1.6)
— Vendor-Specific QoS Parameters
— Downlink Service Parameters
— Service Flow ID
— Transport CID
— Target SAID
— QoS Parameter Set Type
— Service Flow Scheduling Type
— Request/Grant Transmission Policy
— Convergence Sublayer Specification
— Fixed vs. Variable Length SDU Indicator (default = variable)
— SDU Size (required if fixed, forbidden if variable SDU)
— Convergence Sublayer Specific Parameters (see 12.1.1.5 and 12.1.1.6)
— Vendor-specific QoS Parameters
— HMAC Tuple

12.1.1.4.20 DSA-RSP: BS-initiated service addition

— Uplink Service Parameters
— Downlink Service Parameter(s)
— HMAC Tuple

12.1.1.4.21 DSA-ACK

— HMAC Tuple

12.1.1.4.22 DSC-REQ: BS-initiated service change

— Uplink Service Parameters
— Service Flow ID
— Transport CID
— QoS Parameter Set Type
— Maximum Sustained Traffic Rate
— Minimum Reserved Traffic Rate (default = 0 for BE, Max Sust Rate for UGS, required for rtPS and nrtPS)
— Maximum Traffic Burst (required for rtPS and nrtPS, excluded otherwise)
— Traffic Priority (optional, BE only)
— Tolerated Jitter (optional)
— Maximum Latency (optional)
— Convergence Sublayer Specific Parameters (see 12.1.1.5 and 12.1.1.6)
— Vendor-specific QoS Parameters
— Downlink Service Parameters
— Service Flow ID
— Transport CID
— QoS Parameter Set Type
— Convergence Sublayer Specific Parameters (see 12.1.1.5 and 12.1.1.6)
— Vendor-specific QoS Parameters
— HMAC Tuple

12.1.1.4.23 DSC-RSP: BS-initiated service change

— Uplink Service Parameters
— Downlink Service Parameter(s)
— HMAC Tuple

12.1.1.4.24 DSC-ACK

— HMAC Tuple

12.1.1.4.25 DSD-REQ

— HMAC Tuple

12.1.1.4.26 DSD-RSP

— HMAC Tuple

12.1.1.4.27 MCA-REQ

— Multicast CID
— Assignment

12.1.1.4.28 MCA-RSP

Message contains no TLV encoded information

12.1.1.4.29 DBPC-REQ

Message contains no TLV encoded information

12.1.1.4.30 DBPC-RSP

Message contains no TLV encoded information

12.1.1.4.31 RES-CMD

— HMAC Tuple

12.1.1.4.32 SBC-REQ

— WirelessMAN-SC PHY SS Demod Support
— WirelessMAN-SC PHY SS Modulator Support
— WirelessMAN-SC PHY SS Downlink FEC Types
— WirelessMAN-SC PHY SS Uplink FEC Types
— Bandwidth Allocation Support

12.1.1.4.33 SBC-RSP

— WirelessMAN-SC PHY SS Demod Support
— WirelessMAN-SC PHY SS Modulator Support
— WirelessMAN-SC PHY SS Downlink FEC Types
— WirelessMAN-SC PHY SS Uplink FEC Types

12.1.1.4.34 CLK-CMP

The message contains no TLV encoded information.

12.1.1.4.35 DREG-CMD

— HMAC Tuple

12.1.1.4.36 DSX-RVD

The message contains no TLV encoded information.

12.1.1.4.37 TFTP-CPLT

— HMAC Tuple

12.1.1.4.38 TFTP-RSP

The message contains no TLV encoded information.

12.1.1.5 Message parameters specific to profM1

The following subclauses define the order in which systems meeting profile profM1 shall transmit the TLV encoded parameters specific to the ATM CS. Parameters with defined default values should be omitted if the desired value coincides with the default one.

12.1.1.5.1 ATM CS Parameters for DSA-REQ: BS Initiated

— ATM Switching
— ATM Classifier Rule(s) (default = don’t classify)
— ATM Classifier ID
— VPI Classifier
— VCI Classifier(s) (shall follow associated VPI, default = don’t classify on VCI)

12.1.1.5.2 ATM CS Parameters for DSA-RSP: BS Initiated

— None

12.1.1.5.3 ATM CS Parameters for DSC-REQ: BS Initiated

— ATM Classifier Change Action
— ATM Classifier Rule(s) (default = don’t classify)
— ATM Classifier ID
— VPI Classifier
— VCI Classifier(s) (shall follow associated VPI, default = don’t classify on VCI)

12.1.1.5.4 ATM CS Parameters for DSC-RSP: BS Initiated

— None

12.1.1.6 Message parameters specific to profM2

12.1.1.6.1 Packet CS parameters for DSA-REQ: BS-initiated

— Packet Classification Rule(s) (UL service flows only, default is no classification)
— Classifier Rule Index
— Classifier Rule Priority (default to 0)
— IP Type of Service/DSCP (only for IP CSs, default = don't classify on this)
— Protocol (only for IP CSs, default = don't classify on this)
— IP Masked Source Address (only for IP CSs, default = don't classify on this)
— IP Destination Address (only for IP CSs, default = don't classify on this)
— Protocol Source Port Range (only for IP CSs, default = don't classify on this)
— Protocol Destination Port Range (only for IP CSs, default = don't classify on this)
— IPv6 Flow Label field (only for IP CSs, default = don't classify on this)
— Ethernet Destination MAC Address (only for Ethernet CSs, default = don't classify on this)
— Ethernet Source MAC Address (only for Ethernet CSs, default = don't classify on this)
— Ethertype/IEEE 802.2 SAP (only for Ethernet CSs, default = don't classify on this)
— IEEE 802.1D User Priority (only for Ethernet CSs on which VLAN headers carry the priority bits, default = don't classify on this)
— IEEE 802.1Q VLAN_ID (only for Ethernet CSs, default = don't classify on this)
— Associated PHSI (default is no PHS for this classifier match)
— Vendor-specific Classifier Parameters
— PHS Rule(s)
— PHSI
— PHSS
— PHSF
— PHSM (default is suppress all bytes of the suppression field)
— PHSV (default is verify)
— Vendor-specific PHS Parameters

12.1.1.6.2 Packet CS parameters for DSA-RSP: BS-initiated

— Packet Classification Rule(s) (UL service flows only, default is no classification)
— PHS Rule(s)

12.1.1.6.3 Packet CS Parameters for DSC-REQ: BS Initiated

— Classifier Dynamic Service Change Action(s)
— Packet Classification Rule(s) (UL service flows only, 1 per Action)
— Classifier Rule Index
— Classifier Rule Priority (default to 0)
— IP Type of Service/DSCP (only for IP CSs, default = don't classify on this)
— Protocol (only for IP CSs, default = don't classify on this)
— IP Masked Source Address (only for IP CSs, default = don't classify on this)
— IP Destination Address (only for IP CSs, default = don't classify on this)
— Protocol Source Port Range (only for IP CSs, default = don't classify on this)
— Protocol Destination Port Range (only for IP CSs, default = don't classify on this)
— IPv6 Flow Label field (only for IP CSs, default = don't classify on this)
— Ethernet Destination MAC Address (only for Ethernet CSs, default = don't classify on this)
— Ethernet Source MAC Address (only for Ethernet CSs, default = don't classify on this)
— Ethertype/IEEE 802.2 SAP (only for Ethernet CSs, default = don't classify on this)
— IEEE 802.1D User Priority (only for Ethernet CSs on which VLAN headers carry the priority bits, default = don't classify on this)
— IEEE 802.1Q VLAN_ID (only for Ethernet CSs, default = don't classify on this)

— Associated PHSI (default is no PHS for this classifier match)
— Vendor-specific Classifier Parameters
— PHS Dynamic Service Change Action
— PHS Rule(s) (1 per Action)
— PHSI
— PHSS
— PHSF
— PHSM (default is suppress all bytes of the suppression field)
— PHSV (default is verify)
— Vendor-specific PHS Parameters

12.1.1.6.4 Packet CS Parameters for DSC-RSP: BS Initiated

— Uplink Service Parameters
— Downlink Service Parameter(s)

12.1.2 WirelessMAN-SC PHY Profiles

This subclause defines PHY profiles for systems operating with the WirelessMAN-SC PHY.

12.1.2.1 WirelessMAN-SC 25 MHz Channel PHY Profile

Profile identifier: profP1.

Mandatory features:

— Frame duration of 1 ms
— QPSK and QAM-16 in the DL
— QPSK in the UL
— Roll-off Factor = 0.25
— RS outer codes with $t \in \{0, 4, 8, 10, 12\}$.
— Fixed and shortened last code word operation.
— RS block lengths of 6–255.
— 20 MBd symbol rate
— 5000 PS per frame

SSs implementing profP1 shall meet the minimum SS performance requirements listed in Table 619.

Table 619—SS Minimum Performance requirements for profP1

Capability	Minimum performance
Tx Dynamic range	≥ 40 dB
Rx Dynamic Range	≥ 40 dB for QPSK
Tx RMS Power Level at Maximum Power Level Setting for QPSK	≥ 15 dBm
Tx Power Level minimum adjustment step	0.5 dB
Tx Power level adjustment step accuracy 0.5dB ≤ Step size < 2dB	monotonic
Tx Power level adjustment step accuracy 2dB ≤ Step size < 5dB	± 2 dB

Table 619—SS Minimum Performance requirements for profP1 ***(continued)***

Capability	Minimum performance
Tx Power level adjustment step accuracy Step size ≥ 5 dB	± 3 dB
Peak-to-peak symbol jitter, referenced to the previous symbol zero crossing of the transmitted waveform, as percentage of the nominal symbol duration when measured over a period of 2 s	2%
Tx burst timing step size	± 0.25 of a symbol
Tx burst timing step accuracy	± 0.125 of a symbol
Spectral mask (OOB)	Local regulation
Ramp up/ramp down time	≤ 24 symbols
Output noise power spectral density when Tx is not transmitting	≤ –80 dBm/MHz
Modulation accuracy when measured with an ideal receiver without an equalizer for QPSK	12%
Modulation accuracy when measured with an ideal receiver without an equalizer for 16-QAM	6%
Modulation accuracy when measured with an ideal receiver with an equalizer for QPSK	10%
Modulation accuracy when measured with an ideal receiver with an equalizer for 16-QAM	3%
Modulation accuracy when measured with an ideal receiver with an equalizer for 64-QAM	1.5%
BER performance threshold for QPSK, BER=10^{-3}	–94 + 10log(25) dBm
BER performance threshold for 16-QAM, BER=10^{-3}	–87 + 10log(25) dBm
BER performance threshold for 64-QAM, BER=10^{-3}	–79 + 10log(25) dBm
BER performance threshold for QPSK, BER=10^{-6}	–90 + 10log(25) dBm
BER performance threshold for 16-QAM, BER=10^{-6}	–83 + 10log(25) dBm
BER performance threshold for 64-QAM, BER=10^{-6}	–74 + 10log(25) dBm
Transition time from Tx to Rx and from Rx to Tx	TDD: 2 µs H-FDD: 20 µs FDD: n/a
1st adjacent channel interference at BER=10^{-3} for 3 dB degradation C/I for QPSK	–9 dB
1st adjacent channel interference at BER=10^{-3} for 3 dB degradation C/I for 16-QAM	–2 dB
1st adjacent channel interference at BER=10^{-3} for 3 dB degradation C/I for 64-QAM	+5 dB
1st adjacent channel interference at BER=10^{-3} for 1 dB degradation C/I for QPSK	–5 dB
1st adjacent channel interference at BER=10^{-3} for 1 dB degradation C/I for 16-QAM	+2 dB

Table 619—SS Minimum Performance requirements for profP1 *(continued)*

Capability	Minimum performance
1st adjacent channel interference at BER=10^{-3} for 1 dB degradation C/I for 64-QAM	+9 dB
1st adjacent channel interference at BER=10^{-6} for 3 dB degradation C/I for QPSK	–5 dB
1st adjacent channel interference at BER=10^{-6} for 3 dB degradation C/I for 16-QAM	+2 dB
1st adjacent channel interference at BER=10^{-6} for 3 dB degradation C/I for 64-QAM	+9 dB
1st adjacent channel interference at BER=10^{-6} for 1 dB degradation C/I for QPSK	–1 dB
1st adjacent channel interference at BER=10^{-6} for 1 dB degradation C/I for 16-QAM	+6 dB
1st adjacent channel interference at BER=10^{-6} for 1 dB degradation C/I for 64-QAM	+13 dB
2nd adjacent channel interference at BER=10^{-3} for 3 dB degradation C/I for QPSK	–34 dB
2nd adjacent channel interference at BER=10^{-3} for 3 dB degradation C/I for 16-QAM	–27 dB
2nd adjacent channel interference at BER=10^{-3} for 3 dB degradation C/I for 64-QAM	–20 dB
2nd adjacent channel interference at BER=10^{-3} for 1 dB degradation C/I for QPSK	–30 dB
2nd adjacent channel interference at BER=10^{-3} for 1 dB degradation C/I for 16-QAM	–22 dB
2nd adjacent channel interference at BER=10^{-3} for 1 dB degradation C/I for 64-QAM	–16 dB
2nd adjacent channel interference at BER=10^{-6} for 3 dB degradation C/I for QPSK	–30 dB
2nd adjacent channel interference at BER=10^{-6} for 3 dB degradation C/I for 16-QAM	–23 dB
2nd adjacent channel interference at BER=10^{-6} for 3 dB degradation C/I for 64-QAM	–16 dB
2nd adjacent channel interference at BER=10^{-6} for 1 dB degradation C/I for QPSK	–26 dB
2nd adjacent channel interference at BER=10^{-6} for 1 dB degradation C/I for 16-QAM	–20 dB
2nd adjacent channel interference at BER=10^{-6} for 1 dB degradation C/I for 64-QAM	–12 dB
Tx Power Level absolute accuracy	± 6 dB

BSs implementing profP1 shall meet the minimum transmitter performance requirements listed in Table 620. The receiver shall meet the minimum performance requirements in Table 621.

Table 620—BS Tx minimum performance requirements for profP1

Capability	Minimum performance
Peak-to-peak symbol jitter, referenced to the previous symbol zero crossing of the transmitted waveform, as percentage of the nominal symbol duration when measured over a period of 2 seconds	2%
Tx RF frequency	10–66 GHz
Tx RF frequency accuracy	$\pm 10\times10^{-6}$
Spectral mask (OOB)	Local regulation
Spurious	Local regulation
Ramp up/ramp down time	≤ 24 symbols
Modulation accuracy when measured with an ideal receiver without an equalizer for QPSK	12%
Modulation accuracy when measured with an ideal receiver without an equalizer for 16-QAM	6%
Modulation accuracy when measured with an ideal receiver with an equalizer for QPSK	10%
Modulation accuracy when measured with an ideal receiver with an equalizer for 16-QAM	3%
Modulation accuracy when measured with an ideal receiver with an equalizer for 64-QAM	1.5%

Table 621—BS Rx minimum performance for profP1

Capability	Minimum performance
Dynamic Range	27 dB for QPSK
BER performance threshold for QPSK, BER=10^{-3}	–94 + 10log(25) dBm
BER performance threshold for 16-QAM, BER=10^{-3}	–87 + 10log(25) dBm
BER performance threshold for 64-QAM, BER=10^{-3}	–79 + 10log(25) dBm
BER performance threshold for QPSK, BER=10^{-6}	–90 + 10log(25) dBm
BER performance threshold for 16-QAM, BER=10^{-6}	–83 + 10log(25) dBm
BER performance threshold for 64-QAM, BER=10^{-6}	–74 + 10log(25) dBm
1st adjacent channel interference at BER=10^{-3} for 3 dB degradation C/I for QPSK	–9 dB
1st adjacent channel interference at BER=10^{-3} for 3 dB degradation C/I for 16-QAM	–2 dB
1st adjacent channel interference at BER=10^{-3} for 3 dB degradation C/I for 64-QAM	+5 dB
1st adjacent channel interference at BER=10^{-3} for 1 dB degradation C/I for QPSK	–5 dB

Table 621—BS Rx minimum performance for profP1 ***(continued)***

Capability	Minimum performance
1st adjacent channel interference at BER=10^{-3} for 1 dB degradation C/I for 16-QAM	+2 dB
1st adjacent channel interference at BER=10^{-3} for 1 dB degradation C/I for 64-QAM	+9 dB
1st adjacent channel interference at BER=10^{-6} for 3 dB degradation C/I for QPSK	–5 dB
1st adjacent channel interference at BER=10^{-6} for 3 dB degradation C/I for 16-QAM	+2 dB
1st adjacent channel interference at BER=10^{-6} for 3 dB degradation C/I for 64-QAM	+9 dB
1st adjacent channel interference at BER=10^{-6} for 1 dB degradation C/I for QPSK	–1 dB
1st adjacent channel interference at BER=10^{-6} for 1 dB degradation C/I for 16-QAM	+6 dB
1st adjacent channel interference at BER=10^{-6} for 1 dB degradation C/I for 64-QAM	+13 dB
2nd adjacent channel interference at BER=10^{-3} for 3 dB degradation C/I for QPSK	–34 dB
2nd adjacent channel interference at BER=10^{-3} for 3 dB degradation C/I for 16-QAM	–27 dB
2nd adjacent channel interference at BER=10^{-3} for 3 dB degradation C/I for 64-QAM	–20 dB
2nd adjacent channel interference at BER=10^{-3} for 1 dB degradation C/I for QPSK	–30 dB
2nd adjacent channel interference at BER=10^{-3} for 1 dB degradation C/I for 16-QAM	–22 dB
2nd adjacent channel interference at BER=10^{-3} for 1 dB degradation C/I for 64-QAM	–16 dB
2nd adjacent channel interference at BER=10^{-6} for 3 dB degradation C/I for QPSK	–30 dB
2nd adjacent channel interference at BER=10^{-6} for 3 dB degradation C/I for 16-QAM	–23 dB
2nd adjacent channel interference at BER=10^{-6} for 3 dB degradation C/I for 64-QAM	–16 dB
2nd adjacent channel interference at BER=10^{-6} for 1 dB degradation C/I for QPSK	–26 dB
2nd adjacent channel interference at BER=10^{-6} for 1 dB degradation C/I for 16-QAM	–20 dB
2nd adjacent channel interference at BER=10^{-6} for 1 dB degradation C/I for 64-QAM	–12 dB

12.1.2.1.1 FDD Specific WirelessMAN-SC 25 MHz Channel PHY Profile features

Profile identifier: profP1f.

Mandatory features:

— FDD operation
— BS shall respect half-duplex nature of half-duplex SSs

12.1.2.1.2 TDD Specific WirelessMAN-SC 25 MHz Channel PHY Profile features

Profile identifier: profP1t.

Mandatory features:

— TDD operation

12.1.2.2 WirelessMAN-SC 28 MHz Channel PHY Profile

Profile identifier: profP2.

Mandatory features:

— Frame duration of 1 ms
— QPSK and QAM-16 in the DL
— QPSK in the UL
— Roll-off Factor = 0.25
— RS outer codes with $t \in \{0, 4, 8, 10, 12\}$
— Fixed and shortened last code word operation
— RS block lengths of 6–255
— 22.4 MBd symbol rate
— 5600 PS per frame

SSs implementing profP2 shall meet the minimum SS performance requirements as listed in Table 622.

Table 622—SS Minimum performance for profP2

Capability	Minimum performance
Tx Dynamic range	≥ 40 dB
Rx Dynamic Range	≥ 40 dB for QPSK
Tx RMS Power Level at Maximum Power Level Setting for QPSK	≥ 15 dBm
Tx Power Level minimum adjustment step	0.5 dB
Tx Power level adjustment step accuracy Step size [0.5, 2) dB	Monotonic
Tx Power level adjustment step accuracy Step size [2, 5) dB	± 2 dB
Tx Power level adjustment step accuracy Step size ≥ 5 dB	± 3 dB

Table 622—SS Minimum performance for profP2 ***(continued)***

Capability	Minimum performance
Peak-to-peak symbol jitter, referenced to the previous symbol zero crossing of the transmitted waveform, as percentage of the nominal symbol duration when measured over a 2 s period	2%
Tx burst timing step size	± 0.25 of a symbol
Tx burst timing step accuracy	± 0.125 of a symbol
Spectral mask (OOB)	Local regulation
Ramp up/ramp down time	≤ 24 symbols
Output noise power spectral density when Tx is not transmitting	≤ –80 dBm/MHz
Modulation accuracy when measured with an ideal receiver without an equalizer for QPSK	12%
Modulation accuracy when measured with an ideal receiver without an equalizer for 16-QAM	6%
Modulation accuracy when measured with an ideal receiver with an equalizer for QPSK	10%
Modulation accuracy when measured with an ideal receiver with an equalizer for 16-QAM	3%
Modulation accuracy when measured with an ideal receiver with an equalizer for 64-QAM	1.5%
BER performance threshold for QPSK, BER=10^{-3}	–94 + 10log(28) dBm
BER performance threshold for 16-QAM, BER=10^{-3}	–87 + 10log(28) dBm
BER performance threshold for 64-QAM, BER=10^{-3}	–79 + 10log(28) dBm
BER performance threshold for QPSK, BER=10^{-6}	–90 + 10log(28) dBm
BER performance threshold for 16-QAM, BER=10^{-6}	–83 + 10log(28) dBm
BER performance threshold for 64-QAM, BER=10^{-6}	–74 + 10log(28) dBm
Transition time from Tx to Rx and from Rx to Tx	TDD: 2 µs H-FDD: 20 µs FDD: n/a
1st adjacent channel interference at BER=10^{-3} for 3 dB degradation C/I for QPSK	–9 dB
1st adjacent channel interference at BER=10^{-3} for 3 dB degradation C/I for 16-QAM	–2 dB
1st adjacent channel interference at BER=10^{-3} for 3 dB degradation C/I for 64-QAM	+5 dB
1st adjacent channel interference at BER=10^{-3} for 1 dB degradation C/I for QPSK	–5 dB
1st adjacent channel interference at BER=10^{-3} for 1 dB degradation C/I for 16-QAM	+2 dB
1st adjacent channel interference at BER=10^{-3} for 1 dB degradation C/I for 64-QAM	+9 dB

Table 622—SS Minimum performance for profP2 *(continued)*

Capability	Minimum performance
1st adjacent channel interference at BER=10^{-6} for 3 dB degradation C/I for QPSK	–5 dB
1st adjacent channel interference at BER=10^{-6} for 3 dB degradation C/I for 16-QAM	+2 dB
1st adjacent channel interference at BER=10^{-6} for 3 dB degradation C/I for 64-QAM	+9 dB
1st adjacent channel interference at BER=10^{-6} for 1 dB degradation C/I for QPSK	–1 dB
1st adjacent channel interference at BER=10^{-6} for 1 dB degradation C/I for 16-QAM	+6 dB
1st adjacent channel interference at BER=10^{-6} for 1 dB degradation C/I for 64-QAM	+13 dB
2nd adjacent channel interference at BER=10^{-3} for 3 dB degradation C/I for QPSK	–34 dB
2nd adjacent channel interference at BER=10^{-3} for 3 dB degradation C/I for 16-QAM	–27 dB
2nd adjacent channel interference at BER=10^{-3} for 3 dB degradation C/I for 64-QAM	–20 dB
2nd adjacent channel interference at BER=10^{-3} for 1 dB degradation C/I for QPSK	–30 dB
2nd adjacent channel interference at BER=10^{-3} for 1 dB degradation C/I for 16-QAM	–22 dB
2nd adjacent channel interference at BER=10^{-3} for 1 dB degradation C/I for 64-QAM	–16 dB
2nd adjacent channel interference at BER=10^{-6} for 3 dB degradation C/I for QPSK	–30 dB
2nd adjacent channel interference at BER=10^{-6} for 3 dB degradation C/I for 16-QAM	–23 dB
2nd adjacent channel interference at BER=10^{-6} for 3 dB degradation C/I for 64-QAM	–16 dB
2nd adjacent channel interference at BER=10^{-6} for 1 dB degradation C/I for QPSK	–26 dB
2nd adjacent channel interference at BER=10^{-6} for 1 dB degradation C/I for 16-QAM	–20 dB
2nd adjacent channel interference at BER=10^{-6} for 1 dB degradation C/I for 64-QAM	–12 dB
Tx Power Level absolute accuracy	± 6 dB

BSs implementing profP2 shall meet the minimum transmitter performance requirements listed in Table 623. The receiver shall meet the minimum performance requirements in Table 624.

Table 623—BS Tx minimum performance for profP2

Capability	Minimum performance
Peak-to-peak symbol jitter, referenced to the previous symbol zero crossing of the transmitted waveform, as percentage of the nominal symbol duration when measured over a period of 2 s	2%
Tx RF frequency	10–66 GHz
Tx RF frequency accuracy	$\pm 10\times10^{-6}$
Spectral mask (OOB)	local regulation
Spurious	local regulation
Ramp up/ramp down time	≤ 24 symbols
Modulation accuracy when measured with an ideal receiver without an equalizer for QPSK	12%
Modulation accuracy when measured with an ideal receiver without an equalizer for 16-QAM	6%
Modulation accuracy when measured with an ideal receiver with an equalizer for QPSK	10%
Modulation accuracy when measured with an ideal receiver with an equalizer for 16-QAM	3%
Modulation accuracy when measured with an ideal receiver with an equalizer for 64-QAM	1.5%

Table 624—BS Rx minimum performance for profP2

Capability	Minimum performance
Dynamic Range	27 dB for QPSK
BER performance threshold for QPSK, BER=10^{-3}	–94 + 10log(28) dBm
BER performance threshold for 16-QAM, BER=10^{-3}	–87 + 10log(28) dBm
BER performance threshold for 64-QAM, BER=10^{-3}	–79 + 10log(28) dBm
BER performance threshold for QPSK, BER=10^{-6}	–90 + 10log(28) dBm
BER performance threshold for 16-QAM, BER=10^{-6}	–83 + 10log(28) dBm
BER performance threshold for 64-QAM, BER=10^{-6}	–74 + 10log(28) dBm
1st adjacent channel interference at BER=10^{-3} for 3 dB degradation C/I for QPSK	–9 dB
1st adjacent channel interference at BER=10^{-3} for 3 dB degradation C/I for 16-QAM	–2 dB
1st adjacent channel interference at BER=10^{-3} for 3 dB degradation C/I for 64-QAM	+5 dB
1st adjacent channel interference at BER=10^{-3} for 1 dB degradation C/I for QPSK	–5 dB

Table 624—BS Rx minimum performance for profP2 ***(continued)***

Capability	Minimum performance
1st adjacent channel interference at BER=10^{-3} for 1 dB degradation C/I for 16-QAM	+2 dB
1st adjacent channel interference at BER=10^{-3} for 1 dB degradation C/I for 64-QAM	+9 dB
1st adjacent channel interference at BER=10^{-6} for 3 dB degradation C/I for QPSK	–5 dB
1st adjacent channel interference at BER=10^{-6} for 3 dB degradation C/I for 16-QAM	+2 dB
1st adjacent channel interference at BER=10^{-6} for 3 dB degradation C/I for 64-QAM	+9 dB
1st adjacent channel interference at BER=10^{-6} for 1 dB degradation C/I for QPSK	–1 dB
1st adjacent channel interference at BER=10^{-6} for 1 dB degradation C/I for 16-QAM	+6 dB
1st adjacent channel interference at BER=10^{-6} for 1 dB degradation C/I for 64-QAM	+13 dB
2nd adjacent channel interference at BER=10^{-3} for 3 dB degradation C/I for QPSK	–34 dB
2nd adjacent channel interference at BER=10^{-3} for 3 dB degradation C/I for 16-QAM	–27 dB
2nd adjacent channel interference at BER=10^{-3} for 3 dB degradation C/I for 64-QAM	–20 dB
2nd adjacent channel interference at BER=10^{-3} for 1 dB degradation C/I for QPSK	–30 dB
2nd adjacent channel interference at BER=10^{-3} for 1 dB degradation C/I for 16-QAM	–22 dB
2nd adjacent channel interference at BER=10^{-3} for 1 dB degradation C/I for 64-QAM	–16 dB
2nd adjacent channel interference at BER=10^{-6} for 3 dB degradation C/I for QPSK	–30 dB
2nd adjacent channel interference at BER=10^{-6} for 3 dB degradation C/I for 16-QAM	–23 dB
2nd adjacent channel interference at BER=10^{-6} for 3 dB degradation C/I for 64-QAM	–16 dB
2nd adjacent channel interference at BER=10^{-6} for 1 dB degradation C/I for QPSK	–26 dB
2nd adjacent channel interference at BER=10^{-6} for 1 dB degradation C/I for 16-QAM	–20 dB
2nd adjacent channel interference at BER=10^{-6} for 1 dB degradation C/I for 64-QAM	–12 dB

12.1.2.2.1 FDD Specific WirelessMAN-SC 28 MHz Channel PHY Profile features

Profile identifier: profP2f.

Mandatory features:

— FDD operation
— BS shall respect half-duplex nature of half-duplex SSs

12.1.2.2.2 TDD Specific WirelessMAN-SC 28 MHz Channel PHY Profile features

Profile identifier: profP2t.

Mandatory features:

— TDD operation

12.1.2.3 Conventions for MAC Management messages for profiles profP1 and profP2

The following rules shall be followed when reporting parameters in MAC Management messages for systems operating PHY profiles profP1 or profP2:

— Symbol rate, frequency, and roll-off factor shall not be reported in UCD messages.
— BCC code type shall not be reported in UCD messages.
— Frame duration shall not be reported in DCD messages.
— BCC code type shall not be reported in DCD messages.
— UL channel override shall not be reported in RNG-RSP messages.

12.1.2.4 UCD and DCD parameter transmission order for profP1 and profP2

The following subclauses define the order in which systems meeting profiles profP1 and profP2 shall transmit the TLV encoded parameters in the respective messages. Systems implementing either profile shall only include the parameters listed under the respective message in its transmission of these messages. Parameters with defined default values should be omitted if the desired value coincides with the default one.

12.1.2.4.1 DCD

— BS Transmit Power
— PHY Type
— Power Adj Rule
— Downlink Burst Profile(s)
— Modulation Type
— FEC Code Type (default to RS only if omitted)
— RS Information Bytes
— RS parity bytes
— Last Codeword Length (default to shortened if omitted)
— Exit Threshold
— Entry Threshold
— Preamble Present (default to “not present” if omitted)

12.1.2.4.2 UCD

— SS Transition Gap (default to 24 symbols if omitted)
— Power Adjustment Rule

— Contention-based Reservation Timeout
— Uplink Burst Profile(s)
— Modulation Type
— Preamble Length
— FEC Code Type (default to RS only)
— RS Information Bytes
— RS Parity Bytes
— Randomizer Seed
— Last Codeword Length (default to shortened)

12.1.2.5 Initial Ranging IE usage for profP1 and profP2

BSs implementing profP1 or profP2 shall include exactly one Initial Ranging IE in the UL-MAP for each intended opportunity for an SS to perform initial ranging.

12.2 *Reserved*

12.3 Fixed WirelessMan-OFDM

This subclause defines system profiles for systems operating with the WirelessMAN-OFDM air interface and with the WirelessHUMAN interface where it uses the OFDM PHY.

A system profile consists of five components: a MAC profile, a PHY profile, a RF profile, a duplexing selection, and a power class. The defined PHY and MAC profiles are listed in Table 625.

Table 625—Profile definitions

Identifier	Description
profM3_PMP	WirelessMAN-OFDM Basic packet PMP MAC profile
profP3_1.75	WirelessMAN-OFDM 1.75 MHz channel basic PHY profile
profP3_3.5	WirelessMAN-OFDM 3.5 MHz channel basic PHY profile
profP3_7	WirelessMAN-OFDM 7 MHz channel basic PHY profile
profP3_3	WirelessMAN-OFDM 3 MHz channel basic PHY profile
profP3_5.5	WirelessMAN-OFDM 5.5 MHz channel basic PHY profile
profP3_10	WirelessHUMAN(-OFDM) 10 MHz channel basic PHY profile

The Tx power class profiles, as shown in Table 626, are based on the maximum mean Tx power $P_{\mathrm{Tx,max}}$ using all nonguard subcarriers, for which the transmitter requirements as defined in 8.3.10 are met.

The duplexing shall be selected as follows: A system shall implement TDD and/or FDD. A FDD SS system may be implemented either as half-duplex or as full-duplex. A FDD BS system shall respect the half-duplex nature of half-duplex SSs.

Using these conventions, a sample system profile is shown in Table 627. This sample system profile may also be represented by a concatenation of the profile components:

profM3_PMP.profP3_10.profR10_1.TDD.profC3_17.

Table 626—Power classes profiles

Identifier	Tx power performance
profC3_0	$P_{Tx,\ max} < 14$ dBm
profC3_14	$14 \le P_{Tx,\ max} < 17$ dBm
profC3_17	$17 \le P_{Tx,\ max} < 20$ dBm
profC3_20	$20 \le P_{Tx,max} < 23$ dBm
profC3_23	$P_{Tx,max} \ge 23$ dBm

Table 627—Sample system profile

Sample system profile
{
profM3_PMP
profP3_10
profR10_1
TDD
profC3_17
}

12.3.1 WirelessMAN-OFDM and WirelessHUMAN(-OFDM) MAC profiles

This subclause defines MAC profiles for systems operating with the WirelessMAN-OFDM air interface and with the WirelessHUMAN interface where it uses the OFDM PHY.

12.3.1.1 ProfM3_PMP: Basic Packet PMP MAC System profile

This profile specifies a set of capability requirements when a system is operating in the mandatory PMP mode. Table 628 lists the optional MAC features and designates whether they shall or may be implemented to comply with this profile.

— Support of IPv4 capabilities at the packet CS means capability of classification and IPv4 datagrams encapsulation into MAC SDUs as specified in 5.2.5. It is relevant to both DL and UL.
— Support of IEEE 802.3/Ethernet capabilities at the packet CS means capability of classification and IEEE 802.3/Ethernet frames encapsulation into MAC SDUs as specified in 5.2.4. It is relevant to both DL and UL.
— Support of ARQ is defined as the minimum capability to support eight simultaneous ARQ connections.
— Support of CRC means ability to add CRC at Tx and ability to check CRC at Rx in the case when CRC presence is signaled by CI.

Table 628—Optional feature requirements profM3_PMP

Optional feature	Required?	Conditions/Notes
Packet CS PHS Ipv4 over 802.3/Ethernet 802.3/Ethernet	Yes No Yes Yes	—
ATM CS	No	—
Multicast polling groups Multicast polling	Yes	—
CRC functionality	Yes	Elective per connection.
UGS functionality	No	—
rtPS	No	—
BE service	Yes	—
nrtPS	Yes	—
Cryptographic suites: No data encryption, no data authentication and 3-DES,128 CBC mode 56-bit DES, no data authentication and 3-DES,128 No data encryption, no data authentication and RSA, 1024 CBC mode 56-bit DES, no data authentication and RSA, 1024 AES, CCM mode, no data authentication and AES with 128-bit key	 No Yes No No No	—
Undecodable initial ranging feature	Conditional	Required for SS. Not required for BS.
ARQ	No	—
AAS	No	—
DFS	Conditional	Required if mandated by regulation for license-exempt usage. Not required when intended for licensed usage.
BS capability for support of manageable SSs (creating secondary management connections, DHCP, TFTP, SNMP etc.)	Yes	—

12.3.1.1.1 Conventions for MAC Management messages

The following rules shall be followed when reporting parameters in MAC Management messages:

— Service Class Names should not be used.
— DSC-REQ messages shall not contain Request/Transmission Policy, Fixed vs. Variable Length SDU Indicator, SDU Size, ATM Switching, or Convergence Sublayer Specification TLVs.

12.3.1.1.2 MAC Management Message Parameter Transmission Order

TLVs within MAC Management messages shall be ordered as follows:

— Parameters for optional features shall occur after those listed for support of mandatory features.
— Features that are defined as optional, but are mandated by the implemented Profile, if any, shall be ordered as optional.
— Both mandatory and optional TLVs shall subsequently be sequenced in order of increasing Type value except for the HMAC TLV, which shall be the final attribute in the TLV attribute list of the messages.
— Parameters with defined default values should be omitted if the desired value coincides with the default one.

12.3.1.2 Reserved

12.3.2 WirelessMAN-OFDM and WirelessHUMAN(-OFDM) PHY profiles

This subclause defines PHY profiles for systems operating with the WirelessMAN-OFDM and WirelessHUMAN(-OFDM) air interface.

The following set of parameters are common to all defined PHY profiles and shall be complied with in order to comply with each individual profile.

Table 629 lists the optional PHY features and designates whether they shall or may be implemented.

Table 629—Optional PHY feature requirements

Optional feature	Required?	Conditions/Notes
64-QAM	Yes	Required for license bands, but not required for license-exempt bands.
BTC	No	
CTC	No	
Subchannelization	No	
STC	No	
Focused contention bandwidth requesting	No	
T_g/T_b	Conditional	BS shall be capable of using at least one value. SS shall be capable of using entire set.

Table 630 lists minimum performance basic requirements for all defined profiles.

12.3.2.1 ProfP3_1.75: WirelessMAN-OFDM PHY profile for 1.75MHz channelization

Mandatory features:

— Licensed band usage only
— Channel bandwidth BW = 1.75 MHz
— BS shall select frame duration from code set PMP:{2,4,6}. SSs shall be capable of operating with any of the frame durations indicated in the code set.

Table 630—Minimum Performance basic requirements

Capability	Minimum performance
Tx Dynamic range SS SS (if subchannelization supported) BS	 ≥ 30 dB ≥ 50 dB ≥ 10 dB
Tx Power Level minimum adjustment step	≤ 1 dB
Tx Power Level minimum relative step accuracy	≤ ± 50% of step size, but not more than 4 dB
Tx Spectral flatness Absolute difference between adjacent subcarriers: Deviation of average energy in each subcarrier from the measured energy averaged over all 200 active tones: Subcarriers –50 to –1 and +1 to +50: Subcarriers –100 to –50 and +50 to +100:	 ≤ 0.1 dB ≤ ±2 dB ≤ +2/–4 dB
Spectral mask (OOB)	Local regulation
Tx relative constellation error: BPSK-1/2 QPSK-1/2 QPSK-3/4 16-QAM-1/2 16-QAM-3/4 64-QAM-2/3 64-QAM-3/4	SS / BS ≤ –13.0 dB / ≤ –13.0 dB ≤ –16.0 dB / ≤ –16.0 dB ≤ –18.5 dB / ≤ –18.5 dB ≤ –21.5 dB / ≤ –21.5 dB ≤ –25.0 dB / ≤ –25.0 dB ≤ –29.0 dB / ≤ –29.0 dB ≤ –30.0 dB / ≤ –31.0 dB
Rx max. input level on-channel reception tolerance	≥ –30 dBm
Rx max. input level on-channel damage tolerance	≥ 0 dBm
1st adjacent channel rejection at BER = 10^{-6} for 3 dB degradation C/I 16-QAM-3/4 64-QAM-3/4	 ≥ 11 dB ≥ 4 dB
2nd adjacent channel rejection at BER = 10^{-6} for 3 dB degradation C/I 16-QAM-3/4 64-QAM-3/4	 ≥ 30 dB ≥ 23 dB
SSTTG and SSRTG: TDD and H-FDD	 ≤ 100 μs
Reference frequency tolerance BS	 ≤ ± 8 × 10^{-6}

Systems implementing profP3_1.75 shall meet the minimum performance requirements listed in Table 631.

12.3.2.2 ProfP3_3.5: WirelessMAN-OFDM PHY profile for 3.5 MHz channelization

Mandatory features:

— Licensed band usage only.
— Channel bandwidth BW = 3.5 MHz.
— BS shall select frame duration from code set PMP:{2,4,6}. SSs shall be capable of operating with any of the frame durations indicated in the code set.

Systems implementing profP3_3.5 shall meet the minimum performance requirements listed in Table 632.

Table 631—Minimum Performance requirements for profP3_1.75

Capability	Minimum performance
T_b	= 128 µs
BER performance threshold, BER=10^{-6} BPSK-1/2 QPSK-1/2 QPSK-3/4 16-QAM-1/2 16-QAM-3/4 64-QAM-2/3 64-QAM-3/4 Threshold change if subchannelization used	 ≤ –94 dBm ≤ –91 dBm ≤ –89 dBm ≤ –84 dBm ≤ –82 dBm ≤ –77 dBm ≤ –76 dBm $10 \cdot \log(N_{subchannels}/16)$
Reference frequency tolerance SS to BS synchronization tolerance	 156.25 Hz
Reference time tolerance	± (T_b/32)/2

Table 632—Minimum Performance requirements for profP3_3.5

Capability	Minimum performance
T_b	= 64 µs
BER performance threshold, BER=10^{-6} BPSK-1/2 QPSK-1/2 QPSK-3/4 16-QAM-1/2 16-QAM-3/4 64-QAM-2/3 64-QAM-3/4 Threshold change if subchannelization used	 ≤ –91 dBm ≤ –88 dBm ≤ –86 dBm ≤ –81 dBm ≤ –79 dBm ≤ –74 dBm ≤ –73 dBm $10 \cdot \log(N_{subchannels}/16)$
Reference frequency tolerance SS-to-BS synchronization tolerance	 ≤ 312.5 Hz
Reference time tolerance	± (T_b/32)/2

12.3.2.3 ProfP3_7: WirelessMAN-OFDM PHY profile for 7 MHz channelization

Mandatory features:

— Licensed band usage only
— Channel bandwidth BW = 7 MHz
— BS shall select frame duration from code set PMP:{2,4,6}. SSs shall be capable of operating with any of the frame durations indicated in the code set.

Systems implementing profP3_7 shall meet the minimum performance requirements listed in Table 633.

Table 633—Minimum Performance requirements for profP3_7

Capability	Minimum performance
T_b	= 32 µs
BER performance threshold, BER=10^{-6} BPSK-1/2 QPSK-1/2 QPSK-3/4 16-QAM-1/2 16-QAM-3/4 64-QAM-2/3 64-QAM-3/4 Threshold change if subchannelization used	 ≤ –88 dBm ≤ –85 dBm ≤ –83 dBm ≤ –78 dBm ≤ –76 dBm ≤ –71 dBm ≤ –70 dBm $10 \cdot \log(N_{subchannels}/16)$
Reference frequency tolerance SS-to-BS synchronization tolerance	 ≤ 625 Hz
Reference time tolerance	± (T_b/32)/2

12.3.2.4 ProfP3_3: WirelessMAN-OFDM PHY profile for 3 MHz channelization

Mandatory features:

— Licensed band usage only.
— Channel bandwidth BW = 3.0 MHz.
— BS shall select frame duration from code set PMP:{2,4,6}. SSs shall be capable of operating with any of the frame durations indicated in the code set.

Systems implementing profP3_3 shall meet the minimum performance requirements listed in Table 634.

Table 634—Minimum Performance requirements for profP3_3

Capability	Minimum performance
T_b	= $74\frac{18}{43}$ µs
BER performance threshold, BER=10^{-6} BPSK-1/2 QPSK-1/2 QPSK-3/4 16-QAM-1/2 16-QAM-3/4 64-QAM-2/3 64-QAM-3/4 Threshold change if subchannelization used	 ≤ –91 dBm ≤ –88 dBm ≤ –87 dBm ≤ –81 dBm ≤ –80 dBm ≤ –75 dBm ≤ –73 dBm $10 \cdot \log(N_{subchannels}/16)$
Reference frequency tolerance SS-to-BS synchronization tolerance	 ≤ 268.75 Hz
Reference time tolerance	± (T_b/32)/2

12.3.2.5 ProfP3_5.5: WirelessMAN-OFDM PHY profile for 5.5 MHz channelization

Mandatory features:

— Licensed band usage only.
— Channel bandwidth BW = 5.5 MHz.
— BS shall select frame duration from code set PMP:{2,4,6}. SSs shall be capable of operating with any of the frame durations indicated in the code set.

Systems implementing profP3_5.5 shall meet the minimum performance requirements listed in Table 635.

Table 635—Minimum Performance requirements for profP3_5.5

Capability	Minimum performance
T_b	$= 40\frac{40}{79}$ µs
BER performance threshold, BER=10^{-6} BPSK-1/2 QPSK-1/2 QPSK-3/4 16-QAM-1/2 16-QAM-3/4 64-QAM-2/3 64-QAM-3/4 Threshold change if subchannelization used	 ≤ –89 dBm ≤ –86 dBm ≤ –84 dBm ≤ –79 dBm ≤ –77 dBm ≤ –72 dBm ≤ –71 dBm $10 \cdot \log(N_{subchannels}/16)$
Reference frequency tolerance SS-to-BS synchronization tolerance	 ≤ 493.75 Hz
Reference time tolerance	± (T_b/32)/2

12.3.2.6 profP3_10: WirelessHUMAN(-OFDM) PHY profile for 10 MHz channelization

Mandatory features:

— License-exempt band usage only
— Channel bandwidth BW = 10 MHz
— TDD operation
— BS shall select frame duration from code set PMP:{2,4,6}. SSs shall be capable of operating with any of the frame durations indicated in the code set.
— DFS capability (if mandated by regulation)
  — Ability to detect specific spectrum users outside limits defined by regulatory requirements
  — Ability to switch channel within limits defined by regulatory requirements

Systems implementing profP3_10 shall meet the minimum performance requirements listed in Table 636.

Table 636—Minimum Performance requirements for profP3_10

Capability	Minimum performance
T_b	$= 22\frac{2}{9}$ µs
Spectral mask (IB): $f_0 \pm 0$ MHz $f_0 \pm 4.75$ MHz $f_0 \pm 5.45$ MHz $f_0 \pm 9.75$ MHz $f_0 \pm 14.75$ MHz	Linear interpolation between points: 0 dBr 0 dBr –25 dBr –32 dBr –50 dBr
BER performance threshold, BER=10^{-6} BPSK-1/2 QPSK-1/2 QPSK-3/4 16-QAM-1/2 16-QAM-3/4 64-QAM-2/3 64-QAM-3/4 Threshold change if subchannelization used	 ≤ –86 dBm ≤ –83 dBm ≤ –81 dBm ≤ –76 dBm ≤ –74 dBm ≤ –69 dBm ≤ –68 dBm $10 \cdot \log(N_{subchannels}/16)$
Reference frequency tolerance SS-to-BS synchronization tolerance	 ≤ 900 Hz
Reference time tolerance	$\pm (T_b/32)/2$

12.3.3 WirelessMAN-OFDM RF profiles

For licensed bands, no explicit RF profiles are defined. A compliant system shall adhere to the requirements of 8.3.10.4 for the specified supported bands.

12.3.3.1 RF profiles for 10 MHz channelization

12.3.3.1.1 ProfR10_1

Mandatory features:

— RF channels: : $5000 + n \cdot 5$ MHz, $\forall n \in \{55, 57, 59, 61, 63, 65, 67\}$
— Spectral mask: See 8.5.2.

12.3.3.1.2 profR10_2

Mandatory features:

— RF channels: : $5000 + n \cdot 5$ MHz, $\forall n \in \{148, 150, 152, 154, 156, 158, 160, 162, 164, 166\}$
— Spectral mask: See 8.5.2.

12.3.3.1.3 profR10_3

Mandatory features:

— RF channels: : $5000 + n \cdot 5$ MHz, $\forall n \in \{147, 149, 151, 153, 155, 157, 159, 161, 163, 165, 167\}$
— Spectral mask: See 8.5.2.

12.4 Fixed WirelessMAN-OFDMA

This subclause defines system profiles for systems operating with the WirelessMAN-OFDMA and WirelessHUMAN-OFDMA air interfaces.

Any feature not mandatory or conditionally mandatory for a profile is optional for the profile except where otherwise forbidden by the standard. Optional features shall be implemented as specified in the standard.

Table 637—Profile definitions

Identifier	Description
OFDMA_profM1	WirelessMAN-OFDMA basic packet PMP MAC profile
OFDMA_profP1	WirelessMAN-OFDMA 1.25 MHz channel basic PHY profile
OFDMA_profP2	WirelessMAN-OFDMA 3.5 MHz channel basic PHY profile
OFDMA_profP3	WirelessMAN-OFDMA 7 MHz channel basic PHY profile
OFDMA_profP4	WirelessMAN-OFDMA 8.75 MHz channel basic PHY profile
OFDMA_profP5	WirelessMAN-OFDMA 14 MHz channel basic PHY profile
OFDMA_profP6	WirelessMAN-OFDMA 17.5 MHz channel basic PHY profile
OFDMA_profP7	WirelessMAN-OFDMA 28 MHz channel basic PHY profile
OFDMA_profP8	WirelessHUMAN(-OFDMA) 10 MHz channel basic PHY profile
OFDMA_profP9	WirelessHUMAN(-OFDMA) 20 MHz channel basic PHY profile

12.4.1 WirelessMAN-OFDMA Power class profiles

A power class profile contains the class(es) of BS and SS transmitters used in a system. A power class profile may contain transmitters from more than one class, with the profile indicating the highest power level class permitted

The power classes for BS and SS transmitters in a system are listed in Table 638.

Table 638—Power classes

Class identifier	Tx power (dBm)
Class 1	$17 \leq P_{Tx,max} < 20$
Class 2	$20 \leq P_{Tx,max} < 23$
Class 3	$23 \leq P_{Tx,max} < 30$
Class 4	$30 \leq P_{Tx,max}$

The power ratings, $P_{Tx,max}$, associated with these classes are the maximum average output power ratings at which the appropriate transmitter requirements in 8.4.13 are met.

12.4.2 WirelessMAN-OFDMA and WirelessHUMAN(-OFDMA) MAC profiles

This subclause defines MAC profiles for systems operating with the WirelessMAN-OFDMA and WirelessHUMAN-OFDMA air interfaces.

12.4.2.1 Basic packet PMP MAC profile

Profile identifier: OFDMA_ProfM1.

Mandatory Features:

— Support of packet CS
— Support of Internet Protocol Ipv4
— Support IEEE 802.3/Ethernet specific part
— CRC functionality shall be supported for all connections
— Support of dynamic services
— Support of BE service
— Support of nrtPS
— Support of CDMA-based initial and periodic ranging
— Support of Contention based CDMA BRs
— DFS shall be required for the license-exempt bands if mandated by regulation

12.4.2.1.1 Conventions for MAC management messages

The following rules shall be followed when reporting parameters in MAC management messages:

— Service Class Names should not be used.
— No TLVs besides HMAC Tuples shall be reported back in DSA-RSP and DSC-RSP messages.
— No TLVs besides HMAC Tuples shall be reported back in DSA-ACK messages.
— DSC-REQ messages shall not contain Request/Transmission Policy, Fixed vs. Variable Length SDU Indicator, SDU Size, ATM Switching, or Convergence Sublayer Specification TLVs.

12.4.2.1.2 MAC management message parameter transmission order

Systems implementing the profile OFDMA_ProfM1 shall transmit the TLV encoded parameters for mandatory features in the respective messages. Those systems only include the parameters listed under the respective message in its transmission of these messages plus any parameters necessary for optional features. Parameters for optional features shall occur after those listed for support of mandatory features. For the required features, the relevant parameters shall be transmitted in order of increasing Type value of the TLV key of the parameters except for the HMAC TLV, which shall be the final attribute in the TLV attribute list of the messages. Parameters with defined default values should be omitted if the desired value coincides with the default one.

12.4.3 WirelessMAN-OFDMA and WirelessHUMAN(-OFDMA) system PHY profiles

This subclause defines PHY profiles for systems operating with the WirelessMAN-OFDMA air interface and WirelessHUMAN-OFDMA air interfaces.

12.4.3.1 Common features of PHY profiles

All PHY profile shall share the common characteristics as defined in Table 639 (in 12.4.3.1.5) while individual profiles shall be differentiated by the specific characteristics listed for each profile.

If one of the PHY profiles has a parameter, which is different from the parameter defined by the common parameters section, then the values stated in the PHY profile override the value stated in the common parameters section.

12.4.3.1.1 General implementation requirements

The following optional features are not required for implementation of any PHY profiles:

- BTC
- CTC
- 64-QAM
- STC

The following features shall be supported by all PHY profiles:

- Guard time
  - BS shall be capable of using at least one allowed value.
  - SS shall be capable of detecting and using entire set of allowed values.
- Frame duration
  - SSs shall be capable of operating with any of the frame durations as defined at 8.4.5.2.

12.4.3.1.2 FDD-Specific PHY profiles features

Mandatory features:

- FDD Operation
- BS shall respect half-duplex nature of half duplex SS
- Center Frequency for UL shall be reported in the UCD channel encoding

12.4.3.1.3 TDD-Specific PHY profiles features

Mandatory features:

- TDD Operation
- Center Frequency for UL is not reported in the UCD channel encoding

12.4.3.1.4 WirelessHUMAN PHY profiles features

Mandatory features:

- TDD Operation
- Where mandated by regulation, ability to detect specific spectrum users outside limits defined by regulatory requirements
- Center Frequency for UL is not reported in the UCD channel encoding.
- Channel Nr is reported in DCD channel encoding
- Ability to switch channel within limits defined by regulatory requirements

12.4.3.1.5 Minimum performance requirements

Table 639 lists the minimum performance requirements needed for all profiles.

Table 639—Minimum performance requirements for all profiles

Capability	Minimum performance
Tx Dynamic range SS BS	 ≥ 30 dB ≥ 10 dB
Tx Power Level minimum adjustment step	≤ 1 dB
Tx Power Level minimum relative step accuracy	≤ ± 0.5 dB
BS Spectral flatness, when using all subchannels. Absolute difference between adjacent subcarriers: (2.5 dB should be added for Pilot carriers within the symbol due to their boosting). Deviation of average energy in each carrier from the measured energy averaged over all active tones: Carriers –floor((N_{used} – 1)/4) to –1 and +1 to +floor((N_{used} – 1)/4): Carriers –floor((N_{used} – 1)/2) to –floor((N_{used} – 1)/4) and floor((N_{used} – 1)/4) to floor((N_{used} – 1)/2):	 ≤ 0.1 dB ≤ ±2dB ≤ +2/–4dB
SS Spectral flatness, when using all subchannels. Absolute difference between adjacent subcarriers: (2.5 dB should be added for Pilot carriers within the symbol due to their boosting). Deviation of average energy in each carrier from the measured energy averaged over all active tones: Carriers –floor((N_{used} – 1)/4) to –1 and +1 to +floor((N_{used} – 1)/4): Carriers –floor((N_{used} – 1)/2) to –floor((N_{used} – 1)/4) and floor((N_{used} – 1)/4) to floor((N_{used} – 1)/2):	 ≤ 0.1 dB ≤ ± 2dB ≤ +2/–4dB
Spectral mask (OOB)	Local regulation
Tx relative constellation error:	SS / BS
QPSK-1/2	≤ –15 dB / ≤ –15 dB
QPSK-3/4	≤ –18 dB / ≤ –18 dB
16-QAM-1/2	≤ –20.5 dB / ≤ –20.5 dB
16-QAM-3/4	≤ –24 dB / ≤ –24 dB
64-QAM-1/2	≤ –26 dB / ≤ –26 dB
64-QAM-2/3 (if 64-QAM supported)	≤ –28 dB / ≤ –28 dB
64-QAM-3/4 (if 64-QAM supported)	≤ –30 dB / ≤ –30 dB
Rx maximum input level on-channel reception tolerance	≥ –30 dBm
Rx maximum input level on-channel damage tolerance	≥ 0 dBm
Number Of Subchannels Supported when receiving/transmitting SS BS	 1–32 1–32
1st adjacent channel rejection at BER=10^{-6} for 3 dB degradation C/I 16-QAM-3/4 64-QAM-3/4 (if 64-QAM supported)	 ≥ 11 dB ≥ 4 dB

Table 639—Minimum performance requirements for all profiles *(continued)*

Capability	Minimum performance
2nd adjacent channel rejection at BER=10^{-6} for 3 dB degradation C/I 16-QAM-3/4 64-QAM-3/4 (if 64-QAM supported)	 ≥ 30 dB ≥ 23 dB
SSTTG and SSRTG: TDD H-FDD	 ≤ 50 µs ≤ 100 µs
Reference time tolerance	± (T_b/32)/4

12.4.3.2 WirelessMAN-OFDMA 1.25 MHz channel basic PHY profile

Profile identifier: OFDMA_ProfP1.

Systems implementing OFDMA_ProfP1 shall meet the minimum performance requirements listed in Table 640.

Table 640—Minimum performance requirements for OFDMA_ProfP1

Capability	Minimum performance
Channel bandwidth	1.25 MHz
Operation mode	Licensed bands only
Tx Dynamic range SS BS	 ≥ 40 dB ≥ 10 dB
BER performance threshold, BER=10^{-6} (using all subchannels BS/SS) QPSK-1/2 16-QAM-3/4 [Add to sensitivity $10\times\log_{10}$(NumberOfSubChannelsUsed/32) when using less subchannels in the BS Rx]	 ≤ –90 dBm ≤ –80 dBm
Reference frequency tolerance BS SS-to-BS synchronization tolerance	 ≤ ± 1×10^{-6} ≤ 2 Hz
TTG (TDD only)	≥ 200 µs
RTG (TDD only)	≥ 5 µs
Frame duration code set	{4,7}

12.4.3.3 WirelessMAN-OFDMA 3.5 MHz channel basic PHY profile

Profile identifier: OFDMA_ProfP2.

Systems implementing OFDMA_ProfP2 shall meet the minimum performance requirements listed in Table 641.

Table 641—Minimum performance requirements for OFDMA_ProfP2

Capability	Minimum performance
Channel bandwidth	3.5 MHz
Operation mode	Licensed bands only
BER performance threshold, BER=10^{-6} (using all subchannels BS/SS) QPSK-1/2 QPSK-3/4 16-QAM-1/2 16-QAM-3/4 64-QAM-2/3 (if 64-QAM supported) 64-QAM-3/4 (if 64-QAM supported) [Add to sensitivity $10 \times \log_{10}$(NumberOfSubChannelsUsed/32) when using less subchannels in the BS Rx]	 ≤ –87 dBm ≤ –85 dBm ≤ –80 dBm ≤ –78 dBm ≤ –74 dBm ≤ –72 dBm
Reference frequency tolerance BS SS-to-BS synchronization tolerance	 $\leq \pm 2 \times 10^{-6}$ ≤ 20 Hz
Frame duration code set	{4,7}

12.4.3.4 WirelessMAN-OFDMA 7 MHz channel basic PHY profile

Profile identifier: OFDMA_ProfP3.

Systems implementing OFDMA_ProfP3 shall meet the minimum performance requirements listed in Table 642.

Table 642—Minimum performance requirements for OFDMA_ProfP3

Capability	Minimum performance
Channel bandwidth	7 MHz
Operation mode	Licensed bands only
BER performance threshold, BER=10^{-6} (using all subchannels BS/SS) QPSK-1/2 QPSK-3/4 16-QAM-1/2 16-QAM-3/4 64-QAM-2/3 (if 64-QAM supported) 64-QAM-3/4 (if 64-QAM supported) [Add to sensitivity $10 \times \log_{10}$(NumberOfSubChannelsUsed/32) when using less subchannels in the BS Rx]	 ≤ –84 dBm ≤ –82 dBm ≤ –77 dBm ≤ –75 dBm ≤ –71 dBm ≤ –69 dBm
Reference frequency tolerance BS SS-to-BS synchronization tolerance	 $\leq \pm 2\times10^{-6}$ ≤ 40 Hz

Table 642—Minimum performance requirements for OFDMA_ProfP3 *(continued)*

Capability	Minimum performance
Frame duration code set	{2,3,5}

12.4.3.5 WirelessMAN-OFDMA 8.75 MHz channel basic PHY profile

Profile identifier: OFDMA_ProfP4.

Systems implementing OFDMA_ProfP4 shall meet the minimum performance requirements listed in Table 643.

Table 643—Minimum performance requirements for OFDMA_ProfP4

Capability	Minimum performance
Channel bandwidth	8.75 MHz
Operation mode	Licensed bands only
BER performance threshold, BER=10^{-6} (using all subchannels BS/SS) QPSK-1/2 QPSK-3/4 16-QAM-1/2 16-QAM-3/4 64-QAM-2/3 (if 64-QAM supported) 64-QAM-3/4 (if 64-QAM supported) [Add to sensitivity 10 × $\log_{10}$(NumberOfSubChannelsUsed/32) when using less subchannels in the BS Rx]	 ≤ –82.5 dBm ≤ –79.5 dBm ≤ –75.5 dBm ≤ –72.5 dBm ≤ –68.5 dBm ≤ –66.6 dBm
Reference frequency tolerance BS SS-to-BS synchronization tolerance	 ≤ ± 2×10^{-6} ≤ 48 Hz
Frame duration code set	{2, 4, 6, 8}
Spectrum mask	Local regulation

NOTE—When using this profile, the sampling frequency (see 8.4.2.4) shall be F_s = floor($n \times BW$/8000) × 8000.

12.4.3.6 WirelessMAN-OFDMA 14 MHz channel basic PHY profile

Profile identifier: OFDMA_ProfP5.

Systems implementing OFDMA_ProfP4 shall meet the minimum performance requirements listed in Table 644.

Table 644—Minimum performance requirements for OFDMA_ProfP5

Capability	Minimum performance
Channel bandwidth	14 MHz
Operation mode	Licensed bands only
BER performance threshold, BER=10^{-6} (using all subchannels BS/SS) QPSK-1/2 QPSK-3/4 16-QAM-1/2 16-QAM-3/4 64-QAM-2/3 (if 64-QAM supported) 64-QAM-3/4 (if 64-QAM supported) [Add to sensitivity 10 × $\log_{10}$(NumberOfSubChannelsUsed/32) when using less subchannels in the BS Rx]	 ≤ –81 dBm ≤ –79 dBm ≤ –74 dBm ≤ –72 dBm ≤ –68 dBm ≤ –66 dBm
Reference frequency tolerance BS SS-to-BS synchronization tolerance	 ≤ ± 2×10^{-6} ≤ 80 Hz
Frame duration code set	{2,3,5}

12.4.3.7 WirelessMAN-OFDMA 17.5 MHz channel basic PHY profile

Profile identifier: OFDMA_ProfP6.

Systems implementing OFDMA_ProfP6 shall meet the minimum performance requirements listed in Table 645.

Table 645—Minimum performance requirements for OFDMA_ProfP6

Capability	Minimum performance
Channel bandwidth	17.5 MHz
Operation mode	Licensed bands only
BER performance threshold, BER=10^{-6} (using all subchannels BS/SS) QPSK-1/2 QPSK-3/4 16-QAM-1/2 16-QAM-3/4 64-QAM-2/3 (if 64-QAM supported) 64-QAM-3/4 (if 64-QAM supported) [Add to sensitivity 10 × $\log_{10}$(NumberOfSubChannelsUsed/32) when using less subchannels in the BS Rx]	 ≤ –79.5 dBm ≤ –76.5 dBm ≤ –72.5 dBm ≤ –69.5 dBm ≤ –65.5 dBm ≤ –63.6 dBm
Reference frequency tolerance BS SS-to-BS synchronization tolerance	 ≤ ± 2×10^{-6} ≤ 97 Hz
Frame duration code set	{2, 4, 6, 8}
Spectrum mask	Local regulation

NOTE—When using this profile, the sampling frequency (see 8.4.2.4) shall be F_s = floor($n \times BW$/8000) × 8000.

12.4.3.8 WirelessMAN-OFDMA 28 MHz channel basic PHY profile

Profile identifier: OFDMA_ProfP7.

Systems implementing OFDMA_ProfP7 shall meet the minimum performance requirements listed in Table 646.

Table 646—Minimum performance requirements for OFDMA_ProfP7

Capability	Minimum performance
Channel bandwidth	28 MHz
Operation mode	Licensed bands only
BER performance threshold, BER=10^{-6} (using all subchannels BS/SS) QPSK-1/2 QPSK-3/4 16-QAM-1/2 16-QAM-3/4 64-QAM-2/3 (if 64-QAM supported) 64-QAM-3/4 (if 64-QAM supported) [Add to sensitivity 10 × $\log_{10}$(NumberOfSubChannelsUsed/32) when using less subchannels in the BS Rx]	 ≤ –78 dBm ≤ –75 dBm ≤ –71 dBm ≤ –68 dBm ≤ –64 dBm ≤ –62 dBm
Reference frequency tolerance BS SS-to-BS synchronization tolerance	 ≤ ± 2×10^{-6} ≤ 160Hz
Frame duration code set	{2,3,5}

12.4.3.9 WirelessHUMAN(-OFDMA) 10 MHz channel basic PHY profile

Profile identifier: OFDMA_ProfP8.

Systems implementing OFDMA_ProfP8 shall meet the minimum performance requirements listed in Table 647.

Table 647—Minimum performance requirements for OFDMA_ProfP8

Capability	Minimum performance
Channel bandwidth	10 MHz
Operation mode	Licensed-exempt band usage only
BER performance threshold, BER=10^{-6} (using all subchannels BS/SS) QPSK-1/2 QPSK-3/4 16-QAM-1/2 16-QAM-3/4 64-QAM-2/3 (if 64-QAM supported) 64-QAM-3/4 (if 64-QAM supported) [Add to sensitivity 10 × $\log_{10}$(NumberOfSubChannelsUsed/32) when using less subchannels in the BS Rx]	 ≤ –82 dBm ≤ –79 dBm ≤ –75 dBm ≤ –72 dBm ≤ –68 dBm ≤ –66 dBm

Table 647—Minimum performance requirements for OFDMA_ProfP8 *(continued)*

Capability	Minimum performance
Reference frequency tolerance BS SS-to-BS synchronization tolerance	 $\leq \pm 2\times10^{-6}$ ≤ 55 Hz
Frame duration code set	{2,4,5}

12.4.3.10 WirelessHUMAN(-OFDMA) 20 MHz channel basic PHY profile

Profile identifier: OFDMA_ProfP9.

Systems implementing OFDMA_ProfP9 shall meet the minimum performance requirements listed in Table 648.

Table 648—Minimum performance requirements for OFDMA_ProfP9

Capability	Minimum performance
Channel bandwidth	20 MHz
Operation mode	Licensed-exempt band usage only
BER performance threshold, BER=10^{-6} (using all subchannels BS/SS) QPSK-1/2 QPSK-3/4 16-QAM-1/2 16-QAM-3/4 64-QAM-2/3 (if 64-QAM supported) 64-QAM-3/4 (if 64-QAM supported) [Add to sensitivity 10 × $\log_{10}$(NumberOfSubChannelsUsed/32) when using less subchannels in the BS Rx]	 ≤ –79 dBm ≤ –76 dBm ≤ –72 dBm ≤ –69 dBm ≤ –65 dBm ≤ –63 dBm
Reference frequency tolerance BS SS-to-BS synchronization tolerance	 $\leq \pm 2\times10^{-6}$ ≤ 110 Hz
Frame duration code set	{2,4,5}

12.4.4 WirelessMAN-OFDMA RF profiles

This subclause defined RF profiles for the WirelessMAN-OFDMA and WirelessHUMAN(-OFDMA) air interfaces.

Table 649 defines the RF channels for the license bands for informative purposes. The channels shall be calculated using the following formula:

$$F_{start} + n \cdot \Delta F_c, \forall n \in N_{range}$$

where

F_{start} is the start frequency for the specific band

ΔF_c is the center frequency step

N_{range} is the range values for the n parameter

Table 649—License bands RF profiles list

RF profile name	Channel bandwidth (MHz)	Center frequency step ΔF_c (MHz)	UL F_{start} (MHz)	DL F_{start} (MHz)	N_{range}
OFDMA_ProfR1	1.25	1.25	2150.625	N/A	{0,1,...,7}
OFDMA_ProfR2	1.25	1.25	2305.625	N/A	{0,1,...,12}
OFDMA_ProfR3	1.25	1.25	2345.625	N/A	{13,14,...,24}
OFDMA_ProfR4	1.25	1.25	2500.625	N/A	{0,1,...,150}
OFDMA_ProfR5	1.25	1.25	3400.625	N/A	{0,1,...,240}
OFDMA_ProfR6	3.5	1.75	2524.75	2598.75	{0,1,...,38}
OFDMA_ProfR7	3.5	1.75	3411.75	3461.75	{0,1,...,18}
OFDMA_ProfR8	3.5	1.75	3501.75	3551.75	{0,1,...,55}
OFDMA_ProfR9	3.5	1.75	3601.75	3651.75	{0,1,...,55}
OFDMA_ProfR10	3.5	1.75	3701.75	3751.75	{0,1,...,55}
OFDMA_ProfR11	7	1.75	2526.5	2600.5	{0,1,...,36}
OFDMA_ProfR12	7	1.75	3413.5	3463.5	{0,1,...,16}
OFDMA_ProfR13	7	1.75	3503.5	3553.5	{0,1,...,53}
OFDMA_ProfR14	7	1.75	3603.5	3653.5	{0,1,...,53}
OFDMA_ProfR15	7	1.75	3703.5	3753.5	{0,1,...,53}
OFDMA_ProfR16	14	1.75	2530	2604	{0,1,...,32}
OFDMA_ProfR17	14	1.75	3417	3467	{0,1,...,12}
OFDMA_ProfR18	14	1.75	3507	3550	{0,1,...,49}
OFDMA_ProfR19	14	1.75	3607	3650	{0,1,...,49}
OFDMA_ProfR20	14	1.75	3707	3750	{0,1,...,49}
OFDMA_ProfR21	28	1.75	2537	2611	{0,1,...,24}
OFDMA_ProfR22	28	1.75	3424	3467	{0,1,...,4}
OFDMA_ProfR23	28	1.75	3514	3557	{0,1,...,41}
OFDMA_ProfR24	28	1.75	3614	3657	{0,1,...,41}
OFDMA_ProfR25	28	1.75	3714	3757	{0,1,...,41}
OFDMA_ProfR26	10	5	5000	N/A	{55,57,59,61,63,65,67}
OFDMA_ProfR27	10	5	5000	N/A	{148, 150, 152, 154, 156, 158, 160, 162, 164, 166}
OFDMA_ProfR28	10	5	5000	N/A	{147, 149, 151, 153, 155, 157, 159, 161, 163, 165, 167, 169}

Table 649—License bands RF profiles list *(continued)*

RF profile name	Channel bandwidth (MHz)	Center frequency step ΔF_c (MHz)	UL F_{start} (MHz)	DL F_{start} (MHz)	N_{range}
OFDMA_ProfR26	20	5	5000	N/A	{56,60,64}{149, 153, 157, 161, 165}
OFDMA_ProfR27	20	5	5000	N/A	{149, 153, 157, 161, 165}
OFDMA_ProfR28	20	5	5000	N/A	{148, 152, 156, 160, 164, 168}
OFDMA_ProfR29	8.75	0.125	2304.375	N/A	{0,...,730}
OFDMA_ProfR30	17.5	0.125	2308.75	N/A	{0,...,660}

NOTE 1—For 10,20 MHz channels, a spectral mask as defined in 8.6.2 should be applied.

NOTE 2—For FDD and H-FDD cases, both UL and DL shall have the same *n* value.

12.5 WirelessMAN-OFDMA TDD Release 1

This profile is specified in WiMAX Forum® Mobile System Profile Release 1 — IMT-2000 Edition

12.6 WirelessMAN-OFDMA TDD Release 1.5

WiMAX Forum Mobile System Profile Release 1.5—Common Part

WiMAX Forum Mobile System Profile Release 1.5—TDD Specific Part

12.7 WirelessMAN-OFDMA FDD Release 1.5

WiMAX Forum Mobile System Profile Release 1.—Common Part

WiMAX Forum Mobile System Profile Release 1.5—FDD Specific Part

13. MIB Modules

13.1 Structure of MIB modules

13.1.1 wmanIfMib (Obsolete)

The MIB module WMAN-IF-MIB (wmanIfMib), originally documented in the amendment IEEE Std 802.16f-2005, is obsolete and not compatible with this standard.

13.1.2 wmanDevMib

The wmanDevMib is composed of the following three groups:

— wmanDevBsObjects: contains managed objects to be implemented in the SNMP agent in BS.
— wmanDevSsObjects: contains managed objects to be implemented in the SNMP agent in SS.
— wmanDevCommonObjects: contains managed objects to be implemented in the SNMP agent in BS/SS.

Figure 313 shows the high level MIB structure of wmanDevMib for IEEE Std 802.16.

```
wmanDevMib
  ├── wmanDevBsObjects
  ├── wmanDevSsObjects
  └── wmanDevCommonObjects
```

Figure 313—wmanDevMib structure

13.1.2.1 wmanDevBsObjects

Figure 314 shows the high level MIB structure of wmanDevBsObjects.

```
wmanDevBsObjects
  ├── wmanDevBsSoftwareUpgradeTable
  └── wmanDevBsNotification
```

Figure 314—wmanDevBsObjects structure

13.1.2.1.1 wmanDevBsSoftwareUpgradeTable

wmanDevBsSoftwareUpgradeTable contains objects associated with BS software upgrade.

13.1.2.1.2 wmanDevBsNotification

Figure 315 shows the structure of the wmanDevBsNotification subtree that contains managed objects related to BS traps.

```
wmanDevBsNotification
   ├── wmanDevBsTrapControl
   └── wmanDevBsTrapDefinitions
```

Figure 315—wmanDevBsNotification structure

13.1.2.1.2.1 wmanDevBsTrapControl

wmanDevBsTrapControl is used to enable or disable BS traps.

13.1.2.1.2.2 wmanDevBsTrapDefinitions

wmanDevBsTrapDefinitions group defines all the traps reported by BS.

13.1.2.2 wmanDevSsObjects

Figure 316 shows the high level MIB structure of wmanDevSsObjects.

```
wmanDevSsObjects
   ├── wmanDevSsConfigFileEncodingTable
   └── wmanDevSsNotification
```

Figure 316—wmanDevSsObjects structure

13.1.2.2.1 wmanDevSsConfigFileEncodingTable

wmanDevSsConfigFileEncodingTable contains configuration file information about the SS such as manufacturer, hardware model, serial number, and software or firmware revision.

13.1.2.2.2 wmanDevSsNotification

Figure 317 shows the structure of the wmanDevSsNotification subtree that contains managed objects related to the traps.

```
wmanDevSsNotification
   ├── wmanDevSsTrapControl
   └── wmanDevSsTrapDefinitions
```

Figure 317—wmanDevSsNotification structure

13.1.2.2.2.1 wmanDevSsTrapControl

wmanDevSsTrapControlRegister is used to enable or disable SS traps.

13.1.2.2.2.2 wmanDevBsTrapDefinitions

wmanDevSsTrapDefinitions group defines all the traps reported by SS.

13.1.2.3 wmanDevCommonObjects

Figure 318 shows the high level MIB structure of wmanDevSsObjects.

```
wmanDevCommonObjects
  ├── wmanDevCmnEventLog
  ├── wmanDevCmnSnmpAgent
  └── wmanDevCmnDeviceConfig
```

Figure 318—wmanDevSsNotification structure

13.1.2.3.1 wmanDevCmnEventLog

Figure 319 shows the structure of the wmanDevCmnEventLog subtree that contains common managed objects related to the Event Log.

```
wmanDevCmnEventLog
  ├── wmanDevCmnEventLogConfigTable
  ├── wmanDevCmnEventTable
  └── wmanDevCmnEventLogTable
```

Figure 319—wmanDevCmnEventLog structure

13.1.2.3.1.1 wmanDevCmnEventLogConfigTable

wmanDevCmnEventLogConfigTable defines the configurable parameters that are required for the Event Log operation.

13.1.2.3.1.2 wmanDevCmnEventTable

wmanDevCmnEventTable provides the events that are supported by BS or SS.

13.1.2.3.1.3 wmanDevCmnEventLogTable

wmanDevCmnEventLogTable is used to store local events that should reside in the nonvolatile memory.

The Event Log consists of the following features:

— Event Log uses the wrap-around buffer to store events. When the buffer is almost full, a TRAP may be sent to the NMS. When the buffer is full, the oldest entry will be removed to make room for the new entry. The wrap-around can be disabled by NMS to prevent faulty events from flooding the log buffer quickly.
— The size of the buffer is configurable.
— Events in the log have a lifespan that may be configurable.
— The threshold of the residual buffer which triggers the TRAP may be configurable.
— NMS can set the minimum severity of the events that should be logged into the buffer.
— Certain events can trigger notifications that shall be sent to NMS.
— A pointer is provided to enable access to the latest event.

The content of each entry should be retained after the power reset.

13.1.2.3.2 wmanDevCmnSnmpAgent

Figure 320 shows the structure of the wmanDevCmnSnmpAgent subtree that contains common managed objects related to SNMP agent configuration.

```
wmanDevCmnSnmpAgent
   └── wmanDevCmnSnmpV1V2TrapDestTable
```

Figure 320—wmanDevCmnSnmpAgent structure

13.1.2.3.2.1 wmanDevCmnSnmpV1V2TrapDestTable

wmanDevCmnSnmpV1V2TrapDestTable contains the configuration objects for the BS controller entity implementing SNMP agent.

13.1.2.3.3 wmanDevCmnDeviceConfig

wmanDevCmnDeviceConfig contains common managed object related to device configuration.

13.1.3 wmanIf2BsMib

Figure 321 shows the high level MIB structure of wmanIf2BsMib for IEEE Std 802.16. The MIB structure is organized based on the FCAPS reference model.

```
wmanIf2BsMib
   ├── wmanIf2BsFm
   ├── wmanIf2BsCm
   ├── wmanIf2BsAm
   ├── wmanIf2BsPm
   └── wmanIf2BsSm
```

Figure 321—wmanIf2BsMib structure

13.1.3.1 wmanIf2BsFm

Figure 322 shows the structure of the wmanIf2BsFm subtree that contains BS traps to report fault events and exceptions, such as power status or RSSI threshold crossing.


```
wmanIf2BsFm
├── wmanIf2BsTrapControl
│   ├── wmanIf2BsTrapControlRegister
│   ├── wmanIf2BsStatusTrapControlRegister
│   └── wmanIf2BsThresholdConfigTable
└── wmanIf2BsTrapDefinitions
    ├── wmanIf2BsTrapPrefix
    └── wmanIf2BsSsNotificationObjectsTable
```

Figure 322—wmanIf2BsFm structure

13.1.3.1.1 wmanIf2BsTrapControl

13.1.3.1.1.1 wmanIf2BsTrapControlRegister

wmanIf2BsTrapControlRegister is used to enable or disable Base Station traps independently.

13.1.3.1.1.2 wmanIf2BsStatusTrapControlRegister

wmanIf2BsStatusTrapControlRegister is used to enable or disable Base Station status notification traps.

13.1.3.1.1.3 wmanIf2BsThresholdConfigTable

wmanIf2BsThresholdConfigTable contains threshold objects that can be set to detect the threshold crossing events.

13.1.3.1.2 wmanIf2BsTrapDefinitions

13.1.3.1.2.1 wmanIf2BsTrapPrefix

wmanIf2BsTrapPrefix lists the traps reported by the SS.

13.1.3.1.2.2 wmanIf2BsSsNotificationObjectsTable

wmanIf2BsSsNotificationObjectsTable contains SS notification objects that have been reported by the trap.

13.1.3.2 wmanIf2BsCm

Figure 323 shows the structure of the wmanIf2BsCm subtree.

```
wmanIf2BsCm
  ├── wmanIf2BsRegisteredSsTable
  ├── wmanIf2BsConfigurationTable
  ├── wmanIf2BsSsReqCapabilitiesTable
  ├── wmanIf2BsSsRspCapabilitiesTable
  ├── wmanIf2BsBasicCapabilitiesTable
  ├── wmanIf2BsCapabilitiesConfigTable
  ├── wmanIf2BsSsActionsTable
  ├── wmanIf2BsMulticastPollingTable
  ├── wmanIf2BsMbsContentTable
  └── wmanIf2BsPhy
```

Figure 323—wmanIf2BsCm structure

13.1.3.2.1 wmanIf2BsRegisteredSsTable

wmanIf2BsRegisteredSsTable contains the basic capability information of SSs that have been negotiated and agreed between BS and SS via REG-REQ and REG-RSP messages.

13.1.3.2.2 wmanIf2BsConfigurationTable

wmanIf2BsConfigurationTable contains objects for BS system parameters and constants as defined in 10.1. wmanIf2BsConfigurationTable also contains objects that define the default behavior of the BS for 2nd Management Channel scheduling and SFID allocation as well as configuration parameters of the CPS scheduler and AAS system.

13.1.3.2.3 wmanIf2BsSsReqCapabilitiesTable

wmanIf2BsSsReqCapabilitiesTable contains the basic capability information of SSs that have been reported by SSs to BS using RNG-REQ, SBC-REQ, and REG-REQ messages.

13.1.3.2.4 wmanIf2BsSsRspCapabilitiesTable

wmanIf2BsSsRspCapabilitiesTable contains the basic capability information of SSs that have been negotiated and agreed between BS and SS via RNG-REQ/RSP, SBC-REQ/RSP, and REG-REQ/RSP messages.

13.1.3.2.5 wmanIf2BsBasicCapabilitiesTable

wmanIf2BsBasicCapabilitiesTable contains the basic capabilities of the BS as implemented in BS hardware and software. These capabilities along with the configuration for them (wmanIf2BsCapabilitiesConfigTable) are used for negotiation of basic capabilities with SS using RNG-RSP, SBC-RSP, and REG-RSP messages.

13.1.3.2.6 wmanIf2BsCapabilitiesConfigTable

wmanIf2BsCapabilitiesConfigTable contains the configuration for basic capabilities of BS. The table is intended to be used to restrict the Capabilities implemented by BS, for example in order to comply with local regulatory requirements. The BS should use the configuration along with the implemented Capabilities

(wmanIf2BsBasicCapabilitiesTable) for negotiation of basic capabilities with SS using RNG-RSP, SBCRSP, and REG-RSP messages.

13.1.3.2.7 wmanIf2BsSsActionsTable

wmanIf2BsSsActionsTable contains all the actions specified for SSs in the standard. The actions are routed down to SS using unsolicited MAC messages: REG-RSP, DREG-REQ, PRC-LT-CTRL, and RES-CMD. The table also contains the parameters of the actions in cases where they are specified by the standard.

13.1.3.2.8 wmanIf2BsMulticastPollingTable

wmanIf2BsMulticastPollingTable contains the multicast polling group information. BS can send MCA-REQ message to assign/remove a SS to/from a multicast polling group. An entry is created when a SS is assigned to a multicast polling group; and deleted when a SS is removed from a multicast polling group.

13.1.3.2.9 wmanIf2BsMbsContentTable

wmanIf2BsMbsContentTable contains the MBS contents IDs that are used to distinguish the logical MBS connections within a MBS CID.

13.1.3.2.10 wmanIf2BsPhy

Figure 324 shows the structure of the wmanIf2BsPhy subtree that contains BS managed objects related to the Physical Layer.

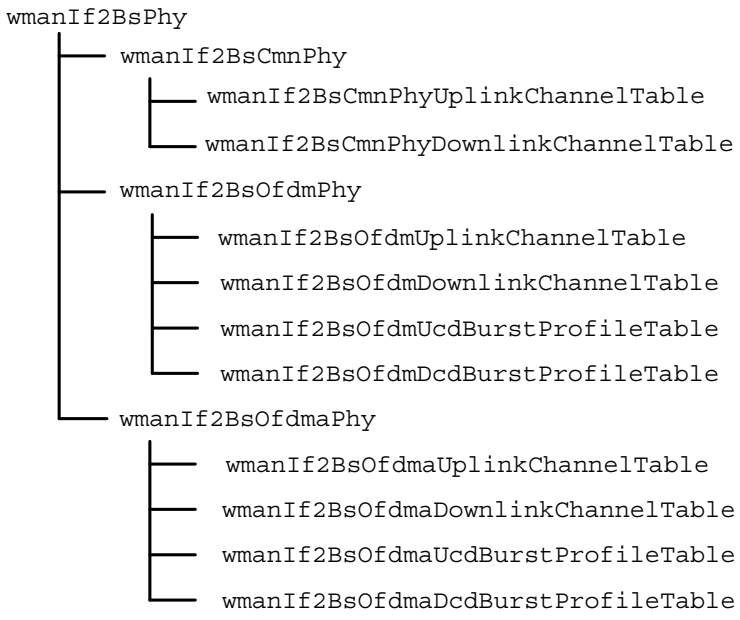

Figure 324—wmanIf2BsPhy structure

13.1.3.2.10.1 wmanIf2BsCmnPhy

wmanIf2BsCmnPhy is a group containing objects common to both OFDM PHY and OFDMA PHY.

13.1.3.2.10.1.1 wmanIf2BsCmnPhyUplinkChannelTable

wmanIf2BsCmnPhyUplinkChannelTable contains the common channel attributes that characterize the uplink channels.

13.1.3.2.10.1.2 wmanIf2BsCmnPhyDownlinkChannelTable

wmanIf2BsCmnPhyDownlinkChannelTable contains the common channel attributes that characterize downlink channels.

13.1.3.2.10.2 wmanIf2BsOfdmPhy

wmanIf2BsOfdmPhy is a group containing objects specific to OFDM PHY.

13.1.3.2.10.2.1 wmanIf2BsOfdmUplinkChannelTable

wmanIf2BsOfdmUplinkChannelTable contains OFDM UCD channel attributes, defining the transmission characteristics of uplink channels.

13.1.3.2.10.2.2 wmanIf2BsOfdmDownlinkChannelTable

wmanIf2BsOfdmDownlinkChannelTable contains OFDM DCD channel attributes, defining the transmission characteristics of downlink channels.

13.1.3.2.10.2.3 wmanIf2BsOfdmUcdBurstProfileTable

wmanIf2BsOfdmUcdBurstProfileTable contains OFDM UCD burst profiles for each uplink channel.

13.1.3.2.10.2.4 wmanIf2BsOfdmDcdBurstProfileTable

wmanIf2BsOfdmDcdBurstProfileTable provides one row for each OFDM DCD burst profile.

13.1.3.2.10.3 wmanIf2BsOfdmaPhy

wmanIf2BsOfdmaPhy is a group containing objects specific to OFDMA PHY.

13.1.3.2.10.3.1 wmanIf2BsOfdmaUplinkChannelTable

wmanIf2BsOfdmaUplinkChannelTable contains OFDMA UCD channel attributes, defining the transmission characteristics of uplink channels.

13.1.3.2.10.3.2 wmanIf2BsOfdmaDownlinkChannelTable

wmanIf2BsOfdmaDownlinkChannelTable contains OFDMA DCD channel attributes, defining the transmission characteristics of downlink channels.

13.1.3.2.10.3.3 wmanIf2BsOfdmaUcdBurstProfileTable

wmanIf2BsOfdmaUcdBurstProfileTable contains OFDMA UCD burst profiles for each uplink channel.

13.1.3.2.10.3.4 wmanIf2BsOfdmaDcdBurstProfileTable

wmanIf2BsOfdmaDcdBurstProfileTable provides one row for each OFDMA DCD burst profile.

13.1.3.3 wmanIf2BsAm

Figure 325 shows the structure of the wmanIf2BsAm subtree.

```
wmanIf2BsAm
   └── wmanIf2BsOtaUsageDataRecordTable
```

Figure 325—wmanIf2BsAm structure

13.1.3.3.1 wmanIf2BsOtaUsageDataRecordTable

wmanIf2BsOtaUsageDataRecordTable contains counters to keep track of the number of packets and octets that have been received or transmitted over the air interface. BS may delete some OTA UDR in wmanIf2BsOtaUsageDataRecordTable after they have been transferred to the AAA server.

13.1.3.4 wmanIf2BsPm

Figure 326 shows the structure of the wmanIf2BsPm subtree.

```
wmanIf2BsPm
   ├── wmanIf2BsPmConfigurationTable
   ├── wmanIf2BsRssiCinrMetricsTable
   ├── wmanIf2BsStartupMetricsTable
   ├── wmanIf2BsThroughputMetricsTable
   ├── wmanIf2BsNetworkEntryMetricsTable
   ├── wmanIf2BsPacketErrorRateTable
   ├── wmanIf2BsHandoverMetricsTable
   ├── wmanIf2BsUserMetricsTable
   ├── wmanIf2BsCidMetricsTable
   ├── wmanIf2BsServiceFlowMetricsTable
   ├── wmanIf2BsArqHarqMetricsTable
   └── wmanIf2BsAuthenticationMetricsTable
```

Figure 326—wmanIf2BsPm structure

13.1.3.4.1 wmanIf2BsPmConfigurationTable

wmanIf2BsPmConfigurationTable contains the configuration of statistics information capture.

13.1.3.4.2 wmanIf2BsRssiCinrMetricsTable

wmanIf2BsRssiCinrMetricsTable contains channel measurement information on the uplink signal received from the SS, and the downlink signal reported by the SS to the BS using REP-REQ/RSP messages.

13.1.3.4.3 wmanIf2BsStartupMetricsTable

wmanIf2BsStartupMetricsTable contains statistical information that can be used to characterize SS performance during the startup.

13.1.3.4.4 wmanIf2BsThroughputMetricsTable

wmanIf2BsThroughputMetricsTable contains the average and peak data rate statistics at the BS sector level.

13.1.3.4.5 wmanIf2BsNetworkEntryMetricsTable

wmanIf2BsNetworkEntryMetricsTable contains the statistics for the network entry and network re-entry.

13.1.3.4.6 wmanIf2BsPacketErrorRateTable

wmanIf2BsPacketErrorRateTable contains the statistics for the packet error rate.

13.1.3.4.7 wmanIf2BsHandoverMetricsTable

wmanIf2BsHandoverMetricsTable contains statistical information that can be used to characterize MS performance during the handover.

13.1.3.4.8 wmanIf2BsUserMetricsTable

wmanIf2BsUserMetricsTable contains counter objects to track user metrics.

13.1.3.4.9 wmanIf2BsCidMetricsTable

wmanIf2BsCidMetricsTable tracks the number of basic and primary CIDs, and the average and maximum number of user CIDs.

13.1.3.4.10 wmanIf2BsServiceFlowMetricsTable

wmanIf2BsServiceFlowMetricsTable contains counter objects to track the number of DSx REQ success rate, IP address success, and number of SFID allocated. and peak DL/UL service flows.

13.1.3.4.11 wmanIf2BsArqHarqMetricsTable

wmanIf2BsArqHarqMetricsTable contains objects that are used to measure the ARQ/HARQ performance.

13.1.3.4.12 wmanIf2BsAuthenticationMetricsTable

wmanIf2BsAuthenticationMetricsTable contains counters used to count on receipt of non-authentic messages so that an active attack can be detected.

13.1.3.5 wmanIf2BsSm

Figure 327 shows the structure of the wmanIf2BsSm subtree that contains BS managed objects related to the MAC privacy management entity.


```
wmanIf2BsSm
    ├── wmanIf2BsPkmSecurityCapabilityTable
    ├── wmanIf2BsSsPkmSecurityCapabilityTable
    ├── wmanIf2BsPkmV1Objects
    │       ├── wmanIf2BsPkmV1ConfigTable
    │       ├── wmanIf2BsSsPkmV1AuthorizationTable
    │       └── wmanIf2BsSsPkmV1TekTable
    └── wmanIf2BsPkmV2Objects
            ├── wmanIf2BsPkmV2ConfigTable
            ├── wmanIf2BsSsPkmV2RsaAuthTable
            ├── wmanIf2BsSsPkmV2TekTable
            └── wmanIf2BsSsPkmV23wayHandshakeTable
```

Figure 327—wmanIf2BsSm structure

13.1.3.5.1 wmanIf2BsPkmSecurityCapabilityTable

wmanIf2BsPkmSecurityCapabilityTable contains the list of the cryptographic suite(s) an BS supports.

13.1.3.5.2 wmanIf2BsSsPkmSecurityCapabilityTable

wmanIf2BsSsPkmSecurityCapabilityTable contains the SS's Security Capabilities that are conveyed by the "Auth Request" message. It contains the list of the cryptographic suite(s) an SS supports.

13.1.3.5.3 wmanIf2BsPkmV1Objects

13.1.3.5.3.1 wmanIf2BsPkmV1ConfigTable

wmanIf2BsPkmV1ConfigTable contains the configuration of the PKM attributes that are to be used for BS and all SSs that are connected to such BS.

13.1.3.5.3.2 wmanIf2BsSsPkmV1AuthorizationTable

wmanIf2BsSsPkmV1AuthorizationTable contains information related to SS's authorization process.

13.1.3.5.3.3 wmanIf2BsSsPkmV1TekTable

wmanIf2BsSsPkmV1TekTable contains the TEK attributes that are associated with each SAID.

13.1.3.5.4 wmanIf2BsPkmV2Objects

13.1.3.5.4.1 wmanIf2BsPkmV2ConfigTable

wmanIf2BsPkmV2ConfigTable contains the PKM attributes that are needed for PKM operation.

13.1.3.5.4.2 wmanIf2BsSsPkmV2RsaAuthTable

wmanIf2BsSsPkmV2RsaAuthTable contains information related to PKMV2 RSA based authorization process.

13.1.3.5.4.3 wmanIf2BsSsPkmV2TekTable

wmanIf2BsSsPkmV2TekTable contains the TEK attributes that are associated with each SAID.

13.1.3.5.4.4 wmanIf2BsSsPkmV23wayHandshakeTable

This table contains information related to PKMV2 3-way handshake process.

13.1.4 wmanIf2mBsMib

Figure 328 shows the high level MIB structure of the wmanIf2mBsMib for IEEE 802.16. The MIB structure is organized based on the FCAPS reference model.

```
wmanIf2mBsMib
   ├── wmanIf2mBsCm
   ├── wmanIf2mBsPm
   ├── wmanIf2mBsFm
   ├── wmanIf2mBsSm
   └── wmanIf2mBsAm
```

Figure 328—wmanIf2mBs structure

13.1.4.1 wmanIf2mBsCm

Figure 329 shows the structure of the wmanIf2mBsCm subtree.

```
wmanIf2mBsCm
   ├── wmanIf2mBsConfiguration
   ├── wmanIf2mBsPowerSavingMode
   ├── wmanIf2mBsNeighborAdv
   ├── wmanIf2mBsPaging
   └── wmanIf2mBsServiceFlow
```

Figure 329—wmanIf2mBsCm structure

13.1.4.1.1 wmanIf2mBsConfiguration

Figure 330 shows the structure of the wmanIf2mBsConfiguration subtree.


```
wmanIf2mBsConfiguration
    ├── wmanIf2mBsConfigurationTable
    ├── wmanIf2mBsSsReqCapabilitiesTable
    ├── wmanIf2mBsSsRspCapabilitiesTable
    ├── wmanIf2mBsSsBasicCapabilitiesTable
    ├── wmanIf2mBsBasicCapabilitiesConfigTable
    ├── wmanIf2mBsSsCidUpdateTable
    └── wmanIf2mBsNetworkServiceProviderTable
```

Figure 330—wmanIf2mBsConfiguration structure

13.1.4.1.1.1 wmanIf2mBsConfigurationTable

wmanIf2mBsConfigurationTable contains objects for BS system parameters and constants as defined in 10.1.

13.1.4.1.1.2 wmanIf2mBsSsReqCapabilitiesTable

wmanIf2mBsSsReqCapabilitiesTable contains the basic capability information of SSs that have been reported by SSs to BS using RNG-REQ, SBC-REQ and REG-REQ messages.

13.1.4.1.1.3 wmanIf2mBsSsRspCapabilitiesTable

wmanIf2mBsSsRspCapabilitiesTable contains the basic capability information of SSs that have been negotiated and agreed between BS and SS via RNG-REQ/RSP, SBC-REQ/RSP and REG-REQ/RSP messages.

13.1.4.1.1.4 wmanIf2mBsBasicCapabilitiesTable

wmanIf2mBsBasicCapabilitiesTable contains the basic capabilities of the BS as implemented in BS hardware and software. These capabilities along with the configuration for them (wmanIf2mBsCapabilitiesConfigTable) are used for negotiation of basic capabilities with SS using RNG-RSP, SBC-RSP and REG-RSP messages.

13.1.4.1.1.5 wmanIf2mBsCapabilitiesConfigTable

wmanIf2mBsCapabilitiesConfigTable contains the configuration for basic capabilities of BS. The table is intended to be used to restrict the Capabilities implemented by BS, for example in order to comply with local regulatory requirements. The BS should use the configuration along with the implemented Capabilities (wmanIf2mBsBasicCapabilitiesTable) for negotiation of basic capabilities with SS using RNG-RSP, SBCRSP, and REG-RSP messages.

13.1.4.1.1.6 wmanIf2mBsSsCidUpdateTable

wmanIf2mBsSsCidUpdateTable contains the “CID update” TLV that is sent in the REG-RSP message to allow an MS to update its service flows and connection information so that it may continue service after a handover to a new serving BS.

13.1.4.1.1.7 wmanIf2mBsNetworkServiceProviderTable

wmanIf2mBsNetworkServiceProviderTable contains the list of NetworkService Provider to be sent by SBC-RSP or broadcast by SII-ADV message.

13.1.4.1.2 wmanIf2mBsPowerSavingMode

Figure 331 shows the structure of the wmanIf2mBsPowerSavingMode subtree.

```
wmanIf2mBsPowerSavingMode
  ├── wmanIf2mBsSsPwrSaving2CidMapTable
  └── wmanIf2mBsSsPowerSavingClassesTable
```

Figure 331—wmanIf2mBsPowerSavingMode structure

13.1.4.1.2.1 wmanIf2mBsSsPwrSaving2CidMapTable

wmanIf2mBsSsPwrSaving2CidMapTable contains the power saving status for each CID in an SS.

13.1.4.1.2.2 wmanIf2mBsSsPowerSavingClassesTable

wmanIf2mBsSsPowerSavingClassesTable contains the power saving classes definitions, and activation/deactivation information that are provided by MOB_SLP-REQ and MOB_SLP-RSP messages.

13.1.4.1.3 wmanIf2mBsNeighborAdv

Figure 332 shows the structure of the wmanIf2mBsNeighborAdv subtree.

```
wmanIf2mBsNeighborAdv
  ├── wmanIf2mBsNeighborAdvCommonTable
  ├── wmanIf2mBsNeighborAdertizementTable
  ├── wmanIf2mBsNeighborOfdmaUcdTable
  ├── wmanIf2mBsNeighborOfdmaDcdTable
  └── wmanIf2mBsLbsAdvNeighborBsTable
```

Figure 332—wmanIf2mBsNeighborAdv structure

13.1.4.1.3.1 wmanIf2mBsNeighborAdvCommonTable

wmanIf2mBsNeighborAdvCommonTable contains the common attributes for the MOB_NBR-ADV message.

13.1.4.1.3.2 wmanIf2mBsNeighborAdvertizementTable

wmanIf2mBsNeighborAdvertizementTable contains the attributes specific to each neighbor BS for the MOB_NBR-ADV message.

13.1.4.1.3.3 wmanIf2mBsNeighborBsOfdmaUcdTable

wmanIf2mBsNeighborBsOfdmaUcdTable contains the attributes of the UCD message for the neighboring BSs. It provides one row for each neighboring BS.

13.1.4.1.3.4 wmanIf2mBsNeighborBsOfdmaDcdTable

wmanIf2mBsNeighborBsOfdmaDcdTable contains the attributes of the DCD message for the neighboring BSs. It provides one row for each neighboring BS.

13.1.4.1.3.5 wmanIf2mBsLbsAdvNeighborBsTable

wmanIf2mBsNeighborBsOfdmaDcdTable contains the attributes that are broadcast in the LBS-ADV message.

13.1.4.1.4 wmanIf2mBsPaging

Figure 333 shows the structure of the wmanIf2mBsPaging subtree.

```
wmanIf2mBsPaging
  ├── wmanIf2mBsPagingAdvertizementTable
  ├── wmanIf2mBsMsPagedTable
  └── wmanIf2mBsPagingGroupsTable
```

Figure 333—wmanIf2mBsPaging structure

13.1.4.1.4.1 wmanIf2mBsPagingAdvertizementTable

wmanIf2mBsPagingAdvertizementTable contains the attributes that BS broadcasts in the MOB_PAG-ADV message.

13.1.4.1.4.2 wmanIf2mBsMsPagedTable

wmanIf2mBsMsPagedTable contains the MSs that are paged in the MOB_PAG-ADV message.

13.1.4.1.4.3 wmanIf2mBsPagingGroupsTable

wmanIf2mBsPagingGroupsTable contains paging group IDs that BS can broadcast in the MOB_PAG-ADV message.

13.1.4.1.5 wmanIf2mBsServiceFlow

Figure 334 shows the structure of the wmanIf2mBsServiceFlow subtree.

```
wmanIf2mBsServiceFlow
   ├── wmanIf2mBsServiceFlowTable
   ├── wmanIf2mBsClassifierRuleTable
   ├── wmanIf2mBsPhsRuleTable
   ├── wmanIf2mBsQoSProfileTable
   └── wmanIf2mBsArqAttributeTable
```

Figure 334—wmanIf2mBsServiceFlow structure

13.1.4.1.5.1 wmanIf2mBsServiceFlowTable

wmanIf2mBsServiceFlowTable contains the service flow database. When an SS first registers at the BS, the BS should download the SSs' service flow profile (e.g. QoS parameter set and classification rules) from the home AAA server.

For portable or mobile SS, when the SS hands over to another BS, as part of the context transfer, the serving BS should transfer the SSs' service flows to the target BS. After the handover, the old serving BS shall change the wmanIf2BsServiceflowState of the service flows, previously used by the SS to 'inactive.' The BS may cleanup wmanIf2BsServiceFlowTable periodically, by removing those entries with wmanIf2BsServiceflowState = 'inactive.'

13.1.4.1.5.2 wmanIf2mBsClassifierRuleTable

wmanIf2mBsClassifierRuleTable contains packet classifier rules associated with service flows.

13.1.4.1.5.3 wmanIf2mBsPhsRuleTable

wmanIf2mBsPhsRuleTable contains PHS rule dictionary entries. Each entry contains the data of the header to be suppressed along with its identification—PHSI.

13.1.4.1.5.4 wmanIf2mBsQoSProfileTable

wmanIf2mBsQoSProfileTable contains QoS profiles that are associated with service flows or CIDs via the wmanIf2mBsQoSProfileIndex.

13.1.4.1.5.5 wmanIf2mBsArqAttributeTable

wmanIf2mBsArqAttributeTable contains ARQ parameters that are associated with the Service Flows.

13.1.4.2 wmanIf2mBsPm

Figure 335 shows the structure of the wmanIf2mBsPm subtree.


```
wmanIf2mBsPm
  ├── wmanIf2mBsSsSleepModeStatisticsTable
  ├── wmanIf2mBsMobileScanRequestTable
  ├── wmanIf2mBsMobileScanResponseTable
  ├── wmanIf2mBsDiversityBsInfoTable
  └── wmanIf2mBsNeighborBsInfoTable
```

Figure 335—wmanIf2mBsPm structure

13.1.4.2.1 wmanIf2mBsSsSleepModeStatisticsTable

wmanIf2mBsSsSleepModeStatisticsTable contains the sleep mode statistic for SS.

13.1.4.2.2 wmanIf2mBsMobileScanRequestTable

wmanIf2mBsMobileScanRequestTable contains the attributes that are sent in the MOB_SCN-REQ message.

13.1.4.2.3 wmanIf2mBsMobileScanResponseTable

wmanIf2mBsMobileScanResponseTable contains the attributes that are sent in the MOB_SCN-RSP message.

13.1.4.2.4 wmanIf2mBsNeighborBsInfoTable

wmanIf2mBsNeighborBsInfoTable contains the neighbor BS information that is sent in the MOB_SCN-RSP and MOB_SCN-REP messages.

13.1.4.2.5 wmanIf2mBsDiversityBsInfoTable

wmanIf2mBsDiversityBsInfoTable contains the diversity BS information that is sent in the MOB_SCN-REP messages.

13.1.5 wmanIf2fBsMib

Figure 336 shows the high level MIB structure of wmanIf2fBsMib.

```
wmanIf2fBsMib
  ├── wmanIf2fBsProvServiceFlowTable
  ├── wmanIf2fBsProvServiceClassTable
  ├── wmanIf2fBsServiceFlowTable
  ├── wmanIf2fBsProvClassifierRuleTable
  ├── wmanIf2fBsProvPhsRuleTable
  ├── wmanIf2fBsClassifierRuleTable
  └── wmanIf2fBsPhsRuleTable
```

Figure 336—wmanIf2fBsMib structure

13.1.5.1 wmanIf2fBsProvServiceFlowTable

wmanIf2fBsProvServiceFlowTable contains service flow provisioned by NMS.

13.1.5.2 wmanIf2fBsProvServiceClassTable

wmanIf2fBsProvServiceClassTable contains QoS parameter set, as defined in subclause 6.3.14 and 11.13. This table is provisioned by NMS.

13.1.5.3 wmanIf2fBsServiceFlowTable

wmanIf2fBsServiceFlowTable contains the service flow database. The table reports each service flow created between BS and SS, its associated CID and all the QoS parameters used.

13.1.5.4 wmanIf2fBsProvClassifierRuleTable

wmanIf2fBsProvClassifierRuleTable contains the packet classifier rules associated with service flows. This table is provisioned by NMS.

13.1.5.5 wmanIf2fBsProvPhsRuleTable

wmanIf2fBsProvPhsRuleTable contains PHS rule dictionary entries. Each entry contains the data of the header to be suppressed along with its identification—PHSI. This table is provisioned by NMS.

13.1.5.6 wmanIf2fBsClassifierRuleTable

wmanIf2fBsClassifierRuleTable contains the properties of classification rules of created service flows.

13.1.5.7 wmanIf2fBsPhsRuleTable

wmanIf2BsPhsRuleTable contains the properties of PHS rules of created service flows.

13.1.6 wmanIf2SsMib

Figure 337 shows the high level MIB structure of the wmanIf2SsMib.

```
wmanIf2SsMib
  ├── wmanIf2SsConfigurationTable
  ├── wmanIf2mSsConfigurationTable
  ├── wmanIf2SsTrapControl
  │     ├── wmanIf2SsTrapControlRegister
  │     └── wmanIf2SsThresholdConfigTable
  └── wmanIf2SsTrapDefinitions
        ├── wmanIf2SsTrapPrefix
        └── wmanIf2SsNotificationObjectsTable
```

Figure 337—wmanIf2SsMib structure

13.1.6.1 wmanIf2SsConfigurationTable

wmanIf2SsConfigurationTable contains objects for SS system parameters and constants as defined in 10.1.

13.1.6.2 wmanIf2mSsConfigurationTable

wmanIf2mSsConfigurationTable contains objects for SS system parameters and constants as defined in 10.1.

13.1.6.3 wmanIf2SsTrapControl

13.1.6.3.1 wmanIf2SsTrapControlRegister

wmanIf2SsTrapControlRegister is used to enable or disable Subscriber Station traps.

13.1.6.3.2 wmanIf2SsThresholdConfigTable

wmanIf2SsThresholdConfigTable contains threshold objects that can be set to detect the threshold crossing events.

13.1.6.4 wmanIf2SsTrapDefinitions

13.1.6.4.1 wmanIf2SsTrapPrefix

wmanIf2SsTrapPrefix lists the traps reported by the SS.

13.1.6.4.2 wmanIf2SsNotificationObjectsTable

wmanIf2SsNotificationObjectsTable contains SS notification objects that have been reported by the trap.

13.1.7 wmanIf2TcMib

wmanIf2TcMib defines TEXTUAL-CONVENTION to be imported by wmanIf2Mib modules.

13.2 ASN.1 Definitions of MIB Modules

13.2.1 wmanIfMib (Obsolete)

The MIB module WMAN-IF-MIB (wmanIfMib) was documented in the amendment IEEE 802.16f-2005. It is not documented here as obsolete and not compatible with this revision of the standard.

13.2.2 wmanDevMib

```
WMAN-DEV-MIB DEFINITIONS ::= BEGIN

  IMPORTS
        MODULE-IDENTITY,
        OBJECT-TYPE,
        NOTIFICATION-TYPE,
        Unsigned32, Integer32
                FROM SNMPv2-SMI
        SnmpAdminString
                FROM SNMP-FRAMEWORK-MIB
```

```
        TEXTUAL-CONVENTION,
        RowStatus, TruthValue,
        TimeStamp, DateAndTime
                FROM SNMPv2-TC
        InetAddressType, InetAddress
                FROM INET-ADDRESS-MIB
        OBJECT-GROUP,
        MODULE-COMPLIANCE,
        NOTIFICATION-GROUP
                FROM SNMPv2-CONF;

wmanDevMib MODULE-IDENTITY
        LAST-UPDATED    "200508020000Z" -- August 02, 2005
        ORGANIZATION    "IEEE 802.16"
        CONTACT-INFO
            "WG E-mail: stds-802-16@ieee.org
             WG Chair:  Roger B. Marks
             Postal:    (U.S.) National Institute
                   of Standards and Technology
             E-mail:    r.b.marks@ieee.org

             TGf Chair: Phillip Barber
             Postal:    Huawei Technoligies Co., Ltd.
             E-mail:    pbarber@futurewei.com

             Editor:    Joey Chou
             Postal:    Intel Corporation
                        5000 W. Chandler Blvd,
                        Chandler, AZ 85227, USA
             E-mail:    joey.chou@intel.com"
        DESCRIPTION
            "This material is from IEEE Std 802.16f-2005
             Copyright (c) 2005 IEEE.
             This MIB Module defines device related managed objects
             for IEEE 802.16-2004 based Subscriber Station
             and Base Station, and is under
             iso(1).std(0).iso8802(8802).wman(16).wmanDevMib(1)"
        REVISION        "200508020000Z"
        DESCRIPTION
            "The first version of WMAN-DEV-MIB module."
        ::= {iso std(0) iso8802(8802) wman(16) 1 }

wmanDevMibObjects     OBJECT IDENTIFIER ::= { wmanDevMib 1 }
wmanDevBsObjects      OBJECT IDENTIFIER ::= { wmanDevMibObjects 1 }
wmanDevSsObjects      OBJECT IDENTIFIER ::= { wmanDevMibObjects 2 }
wmanDevCommonObjects  OBJECT IDENTIFIER ::= { wmanDevMibObjects 3 }

-- Textual Conventions
WmanDevEventSeverity ::= TEXTUAL-CONVENTION
        STATUS      current
        DESCRIPTION
            "wmanDevEventSeverity defines the alarm Severity of an
             event."
        SYNTAX      INTEGER {emergency(1),
```



```
                                alert(2),
                                critical(3),
                                error(4),
                                warning(5),
                                notice(6),
                                informational(7),
                                debug(8)}

wmanDevBsSoftwareUpgradeTable OBJECT-TYPE
        SYNTAX      SEQUENCE OF WmanDevBsSoftwareUpgradeEntry
        MAX-ACCESS  not-accessible
        STATUS      current
        DESCRIPTION
            "This table contains objects associated with BS software
             upgrades."
        ::= { wmanDevBsObjects 1 }

wmanDevBsSoftwareUpgradeEntry OBJECT-TYPE
        SYNTAX      WmanDevBsSoftwareUpgradeEntry
        MAX-ACCESS  not-accessible
        STATUS      current
        DESCRIPTION
            "This table may have multiple entries, and is indexed
             by wmanDevBsDeviceIndex. "
        INDEX       { wmanDevBsDeviceIndex }
        ::= { wmanDevBsSoftwareUpgradeTable 1 }

WmanDevBsSoftwareUpgradeEntry ::= SEQUENCE {
        wmanDevBsDeviceIndex                    INTEGER,
        wmanDevBsVendorId                       OCTET STRING,
        wmanDevBsHwId                           OCTET STRING,
        wmanDevBsCurrentSwVersion               OCTET STRING,
        wmanDevBsDownloadSwVersion              OCTET STRING,
        wmanDevBsUpgradeFileName                OCTET STRING,
        wmanDevBsSoftwareUpgradeAdminState      INTEGER,
        wmanDevBsDownloadSwProgress             INTEGER,
        wmanDevBsSoftwareUpgradeTimeStamp       DateAndTime}

wmanDevBsDeviceIndex OBJECT-TYPE
        SYNTAX      INTEGER (1 .. 10)
        MAX-ACCESS  not-accessible
        STATUS      current
        DESCRIPTION
            "An index identifies a BS device."
        ::= { wmanDevBsSoftwareUpgradeEntry 1 }

wmanDevBsVendorId OBJECT-TYPE
        SYNTAX      OCTET STRING (SIZE (2..256))
        MAX-ACCESS  read-only
        STATUS      current
        DESCRIPTION
            "This value identifies the managed BS vendor to which
             the software upgrade is to be applied."
        ::= { wmanDevBsSoftwareUpgradeEntry 2 }
```

```
wmanDevBsHwId OBJECT-TYPE
        SYNTAX      OCTET STRING(SIZE (2..256))
        MAX-ACCESS  read-only
        STATUS      current
        DESCRIPTION
            "This value identifies the hardware version to which
             the software upgrade is to be applied."
        ::= { wmanDevBsSoftwareUpgradeEntry 3 }

wmanDevBsCurrentSwVersion OBJECT-TYPE
        SYNTAX      OCTET STRING(SIZE (2..256))
        MAX-ACCESS  read-only
        STATUS      current
        DESCRIPTION
            "This value identifies the version of software
             currently running in the BS. The value is
             administered by the vendor identified in the Vendor
             ID field. It should be defined by the vendor to be
             unique with respect to a given hardware ID. After the
             downloaded software being successfully activated, the
             BS shall copy wmanDevBsDownloadSwVersion into
             wmanDevBsCurrentSwVersion."
        ::= { wmanDevBsSoftwareUpgradeEntry 4 }

wmanDevBsDownloadSwVersion OBJECT-TYPE
        SYNTAX      OCTET STRING(SIZE (2..256))
        MAX-ACCESS  read-write
        STATUS      current
        DESCRIPTION
            "This value identifies the version of software to be
             downloaded. The value is administered by the vendor
             identified in the Vendor ID field. It should be defined
             by the vendor to be unique with respect to a given
             hardware ID. This value shall be initialized before
             wmanDevBsSoftwareUpgradeState is set to Download or
             Activate."
        ::= { wmanDevBsSoftwareUpgradeEntry 5 }

wmanDevBsUpgradeFileName OBJECT-TYPE
        SYNTAX      OCTET STRING(SIZE (2..256))
        MAX-ACCESS  read-write
        STATUS      current
        DESCRIPTION
            "The filename is a fully qualified directory path name,
             indicating where the software is located."
        ::= { wmanDevBsSoftwareUpgradeEntry 6 }

wmanDevBsSoftwareUpgradeAdminState OBJECT-TYPE
        SYNTAX      INTEGER {null(0),
                             download(1),
                             activate(2)}
        MAX-ACCESS  read-write
        STATUS      current
```



```
        DESCRIPTION
            "Setting this value to Download causes the BS to initiate
             the software download from  a server (e.g. software image
             server). Setting this value to Activate will activate the
             newly downloaded BS software. Reading this object returns
             the last operation. The download and activation procedure
             is vendor specific which will not be defined in this
             standard."
        DEFVAL      { null }
        ::= { wmanDevBsSoftwareUpgradeEntry 7 }

wmanDevBsDownloadSwProgress OBJECT-TYPE
        SYNTAX      INTEGER (0 .. 100)
        UNITS       "%"
        MAX-ACCESS  read-only
        STATUS      current
        DESCRIPTION
            "This value indicates the progress of software download in
             percentage. For example, 50 means 50% of BS software has
             been downloaded."
        ::= { wmanDevBsSoftwareUpgradeEntry 8 }

wmanDevBsSoftwareUpgradeTimeStamp OBJECT-TYPE
        SYNTAX      DateAndTime
        MAX-ACCESS  read-only
        STATUS      current
        DESCRIPTION
            "This time stamp indicates when the BS software was last
             downloaded or activated."
        ::= { wmanDevBsSoftwareUpgradeEntry 9 }

--
-- Base station Notification Group
-- wmanDevBsNotification contains the BS SNMP Trap objects
--
wmanDevBsNotification   OBJECT IDENTIFIER ::= {wmanDevBsObjects 2}
wmanDevBsTrapControl    OBJECT IDENTIFIER ::= {wmanDevBsNotification 1}
wmanDevBsTrapDefinition OBJECT IDENTIFIER ::= {wmanDevBsNotification 2}

-- This object groups all NOTIFICATION-TYPE objects for BS.
-- It is defined following RFC2758 sections 8.5 and 8.6
-- for the compatibility with SNMPv1.
wmanDevBsTrapPrefix OBJECT IDENTIFIER ::= { wmanDevBsTrapDefinition 0 }

wmanDevBsTrapControlRegister    OBJECT-TYPE
        SYNTAX      BITS {wmanDevBsEvent(0),
                          wmanDevBsLogBuffExceedThresholdTrapControl(1)}
        MAX-ACCESS read-write
        STATUS     current
        DESCRIPTION
            "The object is used to enable or disable Base Station traps.
             From left to right, the set bit indicates the corresponding
             Base Station trap is enabled."
        ::= { wmanDevBsTrapControl 1 }
```

```
--
-- Base station Notification Trap Definitions
--
wmanDevBsEventTrap NOTIFICATION-TYPE
        OBJECTS     {wmanDevCmnEventId,
                     wmanDevCmnEventLogIndex,
                     wmanDevCmnEventLoggedTime,
                     wmanDevCmnEventDescription,
                     wmanDevCmnEventSeverity}
        STATUS      current
        DESCRIPTION
            "This trap is sent when an event is logged into the table
             wmanDevCmnEventLogTable."
        ::= { wmanDevBsTrapPrefix 1 }

wmanDevBsLogBuffExceedThresholdTrap NOTIFICATION-TYPE
        OBJECTS      {wmanDevCmnEventId,
                      wmanDevCmnEventLogResidualBuffThreshold}
        STATUS      current
        DESCRIPTION
            "This trap reports that the residual size of the log buffer
             is lower than the configured threshold."
        ::= { wmanDevBsTrapPrefix 2 }

--
-- SS object group - containing tables and objects to be implemented in
-- the Subscriber station
wmanDevSsConfigFileEncodingTable OBJECT-TYPE
        SYNTAX      SEQUENCE OF WmanDevSsConfigFileEncodingEntry
        MAX-ACCESS  not-accessible
        STATUS      current
        DESCRIPTION
            "This table contains configuration file encoding
            information of the SS."
        REFERENCE
            "Subclause 11.2 in IEEE Std 802.16-2004"
        ::= { wmanDevSsObjects 1 }

wmanDevSsConfigFileEncodingEntry OBJECT-TYPE
        SYNTAX      WmanDevSsConfigFileEncodingEntry
        MAX-ACCESS  not-accessible
        STATUS      current
        DESCRIPTION
              "This table has only one entry, and is indexed
              by wmanDevSsDeviceIndex."
        INDEX { wmanDevSsDeviceIndex }
        ::= { wmanDevSsConfigFileEncodingTable 1 }

WmanDevSsConfigFileEncodingEntry ::= SEQUENCE {
        wmanDevSsDeviceIndex                    INTEGER,
        wmanDevSsMicConfigSetting               OCTET STRING,
        wmanDevSsVendorId                       OCTET STRING,
        wmanDevSsHwId                           OCTET STRING,
```



```
        wmanDevSsSwVersion                      OCTET STRING,
        wmanDevSsUpgradeFileName                OCTET STRING,
        wmanDevSsSwUpgradeTftpServer            InetAddress,
        wmanDevSsTftpServerTimeStamp            DateAndTime}

wmanDevSsDeviceIndex  OBJECT-TYPE
        SYNTAX      INTEGER (1..1)
        MAX-ACCESS  not-accessible
        STATUS      current
        DESCRIPTION
            "An arbitrary index. Must have value of 1."
        ::= { wmanDevSsConfigFileEncodingEntry 1 }

wmanDevSsMicConfigSetting OBJECT-TYPE
        SYNTAX      OCTET STRING (SIZE(20))
        MAX-ACCESS  read-only
        STATUS      current
        DESCRIPTION
            "The value field contains the SS MIC code. This is used
            to detect unauthorized modification or corruption of
            the configuration file."
        ::= { wmanDevSsConfigFileEncodingEntry 2 }

wmanDevSsVendorId OBJECT-TYPE
        SYNTAX      OCTET STRING (SIZE(3))
        MAX-ACCESS  read-only
        STATUS      current
        DESCRIPTION
            "This value identifies the managed SS vendor to which the
            software upgrade is to be applied."
        ::= { wmanDevSsConfigFileEncodingEntry 3 }

wmanDevSsHwId OBJECT-TYPE
        SYNTAX      OCTET STRING (SIZE(0..255))
        MAX-ACCESS  read-only
        STATUS      current
        DESCRIPTION
            "This value identifies the hardware version to which the
            software upgrade is to be applied."
        ::= { wmanDevSsConfigFileEncodingEntry 4 }

wmanDevSsSwVersion OBJECT-TYPE
        SYNTAX      OCTET STRING (SIZE(0..255))
        MAX-ACCESS  read-only
        STATUS      current
        DESCRIPTION
            "This value identifies the software version of the software
             upgrade file. The value is administered by the vendor
             identifed in the Vendor ID field. It should be defined by
             the vendor to be unique with respect to a given hardware
             ID."
        ::= { wmanDevSsConfigFileEncodingEntry 5 }

wmanDevSsUpgradeFileName OBJECT-TYPE
```

```
        SYNTAX      OCTET STRING (SIZE(0..255))
        MAX-ACCESS  read-only
        STATUS      current
        DESCRIPTION
            "The filename is a fully qualified directory path
            name which is in a format appropriate to the server."
        ::= { wmanDevSsConfigFileEncodingEntry 6 }

wmanDevSsSwUpgradeTftpServer OBJECT-TYPE
        SYNTAX      InetAddress
        MAX-ACCESS  read-only
        STATUS      current
        DESCRIPTION
            "This object is the IP address of the TFTP server on
            which the software upgrade file for the SS resides."
        ::= { wmanDevSsConfigFileEncodingEntry 7 }

wmanDevSsTftpServerTimeStamp OBJECT-TYPE
        SYNTAX      DateAndTime
        MAX-ACCESS  read-only
        STATUS      current
        DESCRIPTION
            "This is the sending time of the configuration file in
            seconds. The definition of time is as in IETF RFC 868."
        ::= { wmanDevSsConfigFileEncodingEntry 8 }

--
-- Subscriber station Notification Group
-- wmanDevSsNotificationObjects contains the SS SNMP Trap objects
--
wmanDevSsNotification    OBJECT IDENTIFIER ::= {wmanDevSsObjects 2}
wmanDevSsTrapControl     OBJECT IDENTIFIER ::= {wmanDevSsNotification 1}
wmanDevSsTrapDefinitions OBJECT IDENTIFIER ::= {wmanDevSsNotification 2}

-- This object groups all NOTIFICATION-TYPE objects for BS.
-- It is defined following RFC2758 sections 8.5 and 8.6
-- for the compatibility with SNMPv1.
wmanDevSsTrapPrefix OBJECT IDENTIFIER ::= { wmanDevSsTrapDefinitions 0 }

wmanDevSsTrapControlRegister    OBJECT-TYPE
        SYNTAX      BITS {wmanDevSsEventTrapControl(0),
                          wmanDevSsLogBuffExceedThresholdTrapControl(1)}
        MAX-ACCESS  read-write
        STATUS      current
        DESCRIPTION
             "The object is used to enable Subscriber Station traps.
             From left to right, the set bit indicates the corresponding
             Subscriber Station trap is enabled."
        ::= { wmanDevSsTrapControl  1 }

wmanDevSsEventTrap NOTIFICATION-TYPE
        OBJECTS     {wmanDevCmnEventId,
                     wmanDevCmnEventLogIndex,
                     wmanDevCmnEventLoggedTime,
```



```
                     wmanDevCmnEventDescription,
                     wmanDevCmnEventSeverity}
        STATUS      current
        DESCRIPTION
            "This trap is sent when an event is logged into the table
             wmanDevSsEventLogTable."
        ::= { wmanDevSsTrapPrefix 1 }

wmanDevSsLogBufferExceedThresholdTrap NOTIFICATION-TYPE
        OBJECTS     {wmanDevCmnEventId,
                     wmanDevCmnEventLogResidualBuffThreshold }
        STATUS      current
        DESCRIPTION
            "This trap reports that the residual size of the log
             buffer is lower than the configured threshold."
        ::= { wmanDevSsTrapPrefix 2 }

--
-- Common Event Log Group to be implemented in Base Station
-- and Subscriber Station
--
wmanDevCmnEventLog OBJECT IDENTIFIER ::= { wmanDevCommonObjects 1 }

--
-- Event log configuration
--
wmanDevCmnEventLogConfigTable OBJECT-TYPE
        SYNTAX      SEQUENCE OF WmanDevCmnEventLogConfigEntry
        MAX-ACCESS  not-accessible
        STATUS      current
        DESCRIPTION
            "This table defines the configurable parameters that are
             required for the Event Log operation."
        ::= { wmanDevCmnEventLog 1 }

wmanDevCmnEventLogConfigEntry OBJECT-TYPE
        SYNTAX      WmanDevCmnEventLogConfigEntry
        MAX-ACCESS  not-accessible
        STATUS      current
        DESCRIPTION
            "Event log configuration is indexed by
             wmanDevCmnDeviceIndex."
        INDEX       { wmanDevCmnDeviceIndex }
        ::= { wmanDevCmnEventLogConfigTable 1 }

WmanDevCmnEventLogConfigEntry ::= SEQUENCE {
        wmanDevCmnDeviceIndex                   INTEGER,
        wmanDevCmnEventLogEntryLimit            INTEGER,
        wmanDevCmnEventLifeTimeLimit            INTEGER,
        wmanDevCmnEventLogEntryLimitPerEventId  INTEGER,
        wmanDevCmnEventLogSeverityThreshold     WmanDevEventSeverity,
        wmanDevCmnEventLogWrapAroundBuffEnable  TruthValue,
        wmanDevCmnEventLogLatestEvent           Unsigned32,
        wmanDevCmnEventLogPersistenceSupported  TruthValue,
```

```
        wmanDevCmnEventLogResidualBuffThreshold INTEGER}

wmanDevCmnDeviceIndex  OBJECT-TYPE
        SYNTAX      INTEGER (1 .. 10)
        MAX-ACCESS  read-only
        STATUS      current
        DESCRIPTION
            "An index identifies the BS or SS device."
        ::= { wmanDevCmnEventLogConfigEntry 1 }

wmanDevCmnEventLogEntryLimit    OBJECT-TYPE
        SYNTAX      INTEGER (1 .. 10000)
        MAX-ACCESS  read-write
        STATUS      current
        DESCRIPTION
            "The maximum number of event entries that may be held
             in wmanDevCmnEventLogTable. If an application changes
             the limit while there are events in the log, the
             oldest events must be discarded to bring the log down
             to the new limit."
        DEFVAL      { 100 }
        ::= { wmanDevCmnEventLogConfigEntry 2 }

wmanDevCmnEventLifeTimeLimit    OBJECT-TYPE
        SYNTAX      INTEGER (1 .. 10000)
        UNITS       "minutes"
        MAX-ACCESS  read-write
        STATUS      current
        DESCRIPTION
            "The number of minutes an event should be kept in the log
             before it is automatically removed. If an application
             changes the value of wmanDevCmnEventLifeTimeLimit, events
             that are older than the new time may be discarded to meet
             the new lifetime. A value of 0 means lifetime limit."
        DEFVAL      { 1440 }
        ::= { wmanDevCmnEventLogConfigEntry 3 }

wmanDevCmnEventLogEntryLimitPerEventId    OBJECT-TYPE
        SYNTAX      INTEGER  (1 .. 100)
        MAX-ACCESS  read-write
        STATUS      current
        DESCRIPTION
            "The number of log entries per event that can be
             logged."
        DEFVAL      { 10 }
        ::= { wmanDevCmnEventLogConfigEntry 4 }

wmanDevCmnEventLogSeverityThreshold    OBJECT-TYPE
        SYNTAX      WmanDevEventSeverity
        MAX-ACCESS  read-write
        STATUS      current
        DESCRIPTION
            "This object defines the minimum severity level of the
             event that will be logged into the buffer."
```



```
        DEFVAL      { warning }
        ::= { wmanDevCmnEventLogConfigEntry 5 }

wmanDevCmnEventLogWrapAroundBuffEnable    OBJECT-TYPE
        SYNTAX      TruthValue
        MAX-ACCESS  read-write
        STATUS      current
        DESCRIPTION
            "True (1), indicates that the log buffer will be wrapped
             around when the buffer is full."
        DEFVAL      { true }
        ::= { wmanDevCmnEventLogConfigEntry 6 }

wmanDevCmnEventLogLatestEvent OBJECT-TYPE
        SYNTAX      Unsigned32 (1..4294967295)
        MAX-ACCESS  read-only
        STATUS      current
        DESCRIPTION
            "This object is the index pointing to the latest event in
             wmanDevCmnEventLogTable"
        DEFVAL      { 1 }
        ::= { wmanDevCmnEventLogConfigEntry 7 }

wmanDevCmnEventLogPersistenceSupported    OBJECT-TYPE
        SYNTAX      TruthValue
        MAX-ACCESS  read-only
        STATUS      current
        DESCRIPTION
            "True (1), indicates that the Event Log persisted through
             power cycle and reset."
        ::= { wmanDevCmnEventLogConfigEntry 8 }

wmanDevCmnEventLogResidualBuffThreshold OBJECT-TYPE
        SYNTAX      INTEGER (1 .. 100)
        MAX-ACCESS  read-write
        STATUS      current
        DESCRIPTION
            "This object defines the configurable parameter that
             describes the threshold ratio of the residual buffer to
             the total log buffer. If the ratio exceeds the threshold,
             system triggers the TRAP "
        DEFVAL      { 20 }
        ::= { wmanDevCmnEventLogConfigEntry 9 }

--
--      Events Table
--
wmanDevCmnEventTable OBJECT-TYPE
        SYNTAX      SEQUENCE OF WmanDevCmnEventEntry
        MAX-ACCESS  not-accessible
        STATUS      current
        DESCRIPTION
             "This table provides the events that are supported by BS or
SS."
```

```
        ::= { wmanDevCmnEventLog 2 }

wmanDevCmnEventEntry OBJECT-TYPE
        SYNTAX      WmanDevCmnEventEntry
        MAX-ACCESS  not-accessible
        STATUS      current
        DESCRIPTION
            "Each entry in this table represents an event that can be
            generated by BS or SS. It is indexed by wmanDevCmnDeviceIndex
             and wmanDevCmnEventIdentifier."
        INDEX       { wmanDevCmnDeviceIndex, wmanDevCmnEventIdentifier }
        ::= { wmanDevCmnEventTable 1 }

WmanDevCmnEventEntry ::= SEQUENCE {
        wmanDevCmnEventIdentifier               INTEGER,
        wmanDevCmnEventDescription              SnmpAdminString,
        wmanDevCmnEventSeverity                 WmanDevEventSeverity,
        wmanDevCmnEventNotification             TruthValue,
        wmanDevCmnEventNotificationOid          OBJECT IDENTIFIER}

wmanDevCmnEventIdentifier OBJECT-TYPE
        SYNTAX      INTEGER (1..100000)
        MAX-ACCESS  not-accessible
        STATUS      current
        DESCRIPTION
            "A numeric value represents the Event Identifier."
        ::= { wmanDevCmnEventEntry 1 }

wmanDevCmnEventDescription  OBJECT-TYPE
        SYNTAX      SnmpAdminString
        MAX-ACCESS  read-write
        STATUS      current
        DESCRIPTION
            "This object describes the event."
        ::= { wmanDevCmnEventEntry 2 }

wmanDevCmnEventSeverity  OBJECT-TYPE
        SYNTAX      WmanDevEventSeverity
        MAX-ACCESS  read-write
        STATUS      current
        DESCRIPTION
            "This object describes the severity of such event.
             The system will assign a severity for each event. But,
             it can be configurable by NMS"
        ::= { wmanDevCmnEventEntry 3 }

wmanDevCmnEventNotification  OBJECT-TYPE
        SYNTAX      TruthValue
        MAX-ACCESS  read-write
        STATUS      current
        DESCRIPTION
            "An event notification will be reported when it is
             True (1)."
        DEFVAL      { false }
```



```
        ::= { wmanDevCmnEventEntry 4 }

wmanDevCmnEventNotificationOid OBJECT-TYPE
        SYNTAX      OBJECT IDENTIFIER
        MAX-ACCESS  read-only
        STATUS      current
        DESCRIPTION
            "This is the object identifier of a NOTIFICATION-TYPE
             object. If wmanDevCmnEventNotification is True, a trap that
             is identified by this OID will be reported."
        ::= { wmanDevCmnEventEntry 5 }

--
-- Event log table
--
wmanDevCmnEventLogTable OBJECT-TYPE
        SYNTAX      SEQUENCE OF WmanDevCmnEventLogEntry
        MAX-ACCESS  not-accessible
        STATUS      current
        DESCRIPTION
            "This is the Syslog table that is used to store local
             events. This table should reside in the non-volatile
             memory that should presist after power cycle or reboot.
             The number of entries in this table is determined by
             wmanDevCmnEventLogEntryLimit. It is a wrap around buffer.
             When the buffer is full, the oldest entry will be removed
             to make room for the newest entry."
        ::= { wmanDevCmnEventLog 3 }

wmanDevCmnEventLogEntry OBJECT-TYPE
        SYNTAX      WmanDevCmnEventLogEntry
        MAX-ACCESS  not-accessible
        STATUS      current
        DESCRIPTION
            "Entries appear in this table when events occur, and are
             removed to make ways for new entries when buffer is full,
             the entry passes the lifetime limit. This table is
             indexed by wmanDevCmnDeviceIndex and
             wmanDevCmnEventLogIndex."
        INDEX       { wmanDevCmnDeviceIndex, wmanDevCmnEventLogIndex }
        ::= { wmanDevCmnEventLogTable 1 }

WmanDevCmnEventLogEntry ::= SEQUENCE {
        wmanDevCmnEventLogIndex                 Unsigned32,
        wmanDevCmnEventId                       INTEGER,
        wmanDevCmnEventLoggedTime               TimeStamp,
        wmanDevCmnEventLogDescription           SnmpAdminString,
        wmanDevCmnEventLogSeverity              WmanDevEventSeverity}

wmanDevCmnEventLogIndex OBJECT-TYPE
        SYNTAX      Unsigned32 (1..4294967295)
        MAX-ACCESS  read-only
        STATUS      current
        DESCRIPTION
```

```
            "A monotonically increasing integer for the sole purpose
             of indexing entries within the event log. When it
             reaches the maximum value, the agent wraps the value
             back to 1."
        ::= { wmanDevCmnEventLogEntry 1 }

wmanDevCmnEventId OBJECT-TYPE
        SYNTAX      INTEGER  (1 .. 100000)
        MAX-ACCESS  read-only
        STATUS      current
        DESCRIPTION
            "The identifier of a SS event."
        ::= { wmanDevCmnEventLogEntry 2 }

wmanDevCmnEventLoggedTime OBJECT-TYPE
        SYNTAX      TimeStamp
        MAX-ACCESS  read-only
        STATUS      current
        DESCRIPTION
            "The value of sysUpTime when the entry was placed in the
             log. If the entry occurred before the most recent
             management system initialization this object value must
             be set to zero."
        ::= { wmanDevCmnEventLogEntry 3 }

wmanDevCmnEventLogDescription  OBJECT-TYPE
        SYNTAX      SnmpAdminString
        MAX-ACCESS  read-only
        STATUS      current
        DESCRIPTION
            "This object describes the event."
        ::= { wmanDevCmnEventLogEntry 4 }

wmanDevCmnEventLogSeverity  OBJECT-TYPE
        SYNTAX      WmanDevEventSeverity
        MAX-ACCESS  read-only
        STATUS      current
        DESCRIPTION
            "This object describes the severity of such event."
        ::= { wmanDevCmnEventLogEntry 5 }

--
-- wmanDevCmnSnmpAgent contain objects related to the SNMP agent
-- implemented by the device
--
wmanDevCmnSnmpAgent OBJECT IDENTIFIER ::= { wmanDevCommonObjects 2 }
--
-- SNMP agent trap destination table
--
wmanDevCmnSnmpV1V2TrapDestTable OBJECT-TYPE
        SYNTAX      SEQUENCE OF WmanDevCmnSnmpV1V2TrapDestEntry
        MAX-ACCESS  not-accessible
        STATUS      current
        DESCRIPTION
```



```
            "This table contains the configuration objects for the
             device implementing SNMP agent."
        ::= { wmanDevCmnSnmpAgent 1 }

wmanDevCmnSnmpV1V2TrapDestEntry OBJECT-TYPE
        SYNTAX      WmanDevCmnSnmpV1V2TrapDestEntry
        MAX-ACCESS  not-accessible
        STATUS      current
        DESCRIPTION
            "This table is indexed by wmanDevCmnSnmpV1V2TrapDestIndex."
        INDEX { wmanDevCmnSnmpV1V2TrapDestIndex }
        ::= { wmanDevCmnSnmpV1V2TrapDestTable 1 }

WmanDevCmnSnmpV1V2TrapDestEntry ::= SEQUENCE {
        wmanDevCmnSnmpV1V2TrapDestIndex         INTEGER,
        wmanDevCmnSnmpV1V2TrapDestIpAddrType    InetAddressType,
        wmanDevCmnSnmpV1V2TrapDestIpAddr        InetAddress,
        wmanDevCmnSnmpV1V2TrapDestPort          Integer32,
        wmanDevCmnSnmpV1V2TrapDestRowStatus     RowStatus}

wmanDevCmnSnmpV1V2TrapDestIndex  OBJECT-TYPE
        SYNTAX      INTEGER (1..8)
        MAX-ACCESS  not-accessible
        STATUS      current
        DESCRIPTION
            "The index identifies the trap destination. The number of
             rows is limited to eight."
        ::= { wmanDevCmnSnmpV1V2TrapDestEntry 1 }

wmanDevCmnSnmpV1V2TrapDestIpAddrType OBJECT-TYPE
        SYNTAX      InetAddressType
        MAX-ACCESS  read-create
        STATUS      current
        DESCRIPTION
            "The type of IP address used in the object
             wmanDevCmnSnmpV1V2TrapDestV1V2TrapDestIpAddr."
        ::= { wmanDevCmnSnmpV1V2TrapDestEntry 2 }

wmanDevCmnSnmpV1V2TrapDestIpAddr OBJECT-TYPE
        SYNTAX      InetAddress
        MAX-ACCESS  read-create
        STATUS      current
        DESCRIPTION
            "IP address of SNMP manager configured as a trap
             destination for versions V1 and V2 of SNMP. If this object
             is not created or empty the traps are not sent."
        ::= { wmanDevCmnSnmpV1V2TrapDestEntry 3 }

wmanDevCmnSnmpV1V2TrapDestPort OBJECT-TYPE
        SYNTAX      Integer32 (0..65535)
        MAX-ACCESS  read-create
        STATUS      current
        DESCRIPTION
             "Port number of SNMP manager configured as a trap
              destination for versions V1 and V2 of SNMP."
```

```
        REFERENCE
            "Subclause 11.13.19.3.4.6 in IEEE Std 802.16-2004"
        ::= { wmanDevCmnSnmpV1V2TrapDestEntry 4 }

wmanDevCmnSnmpV1V2TrapDestRowStatus  OBJECT-TYPE
        SYNTAX      RowStatus
        MAX-ACCESS  read-create
        STATUS      current
        DESCRIPTION
            "This object is used to ensure that the write operation to
             multiple columns is guaranteed to be treated as atomic
             operation by agent."
        ::= { wmanDevCmnSnmpV1V2TrapDestEntry 5 }

--
-- wmanDevCmnDeviceCofig contains common configuration objects for the
-- device
--
wmanDevCmnDeviceConfig OBJECT IDENTIFIER ::= { wmanDevCommonObjects 3 }

wmanDevCmnResetDevice  OBJECT-TYPE
        SYNTAX      INTEGER {actionResetDeviceNoAction(0),
                             actionResetDevice(1)}
        MAX-ACCESS  read-write
        STATUS      current
        DESCRIPTION
            "This object should be implemented as follows:
             - When set to actionsResetDevice value, instructs device
               to reset itself
             - When set to value different than actionsResetDevice it
               should be ignored
             - When read it should return actionsResetDeviceNoAction"
        ::= { wmanDevCmnDeviceConfig 1 }

--
-- Conformance Information
--
wmanDevMibConformance OBJECT IDENTIFIER ::= {wmanDevMib 2}
wmanDevMibGroups      OBJECT IDENTIFIER ::= {wmanDevMibConformance 1}
wmanDevMibCompliances OBJECT IDENTIFIER ::= {wmanDevMibConformance 2}

-- compliance statements
wmanDevMibCompliance MODULE-COMPLIANCE
        STATUS      current
        DESCRIPTION
            "The compliance statement for devices that implement
             Wireless MAN interfaces as defined in IEEE Std 802.16-2004."

        MODULE  -- wmanDevMib

        GROUP wmanDevMibBsGroup      -- conditionally mandatory group
        DESCRIPTION
            "This group is mandatory for Base Station."
```



```
        GROUP wmanDevMibBsSwUpgradeGroup    -- optional group
        DESCRIPTION
            "This group is optional for Base Station."

        GROUP wmanDevMibSsGroup      -- conditionally mandatory group
        DESCRIPTION
            "This group is mandatory for Subscriber Station."

        GROUP wmanDevMibCmnGroup     -- conditionally mandatory group
        DESCRIPTION
            "This group is mandatory for Base Station and
             Subscriber Station."

        GROUP wmanDevMibBsNotificationGroup -- optional group
        DESCRIPTION
            "This group is optional for Base Station."

        GROUP wmanDevMibSsNotificationGroup -- optional group
        DESCRIPTION
            "This group is optional for Subscriber Station."
        ::= { wmanDevMibCompliances 1 }

wmanDevMibBsGroup     OBJECT-GROUP
        OBJECTS {-- BS Trap Control
                 wmanDevBsTrapControlRegister}
        STATUS       current
        DESCRIPTION
            "This group contains objects for BS."
        ::= { wmanDevMibGroups 1 }

wmanDevMibBsSwUpgradeGroup     OBJECT-GROUP
        OBJECTS {-- BS Software Upgrade
                 wmanDevBsVendorId,
                 wmanDevBsHwId,
                 wmanDevBsCurrentSwVersion,
                 wmanDevBsDownloadSwVersion,
                 wmanDevBsUpgradeFileName,
                 wmanDevBsSoftwareUpgradeAdminState,
                 wmanDevBsDownloadSwProgress,
                 wmanDevBsSoftwareUpgradeTimeStamp}
        STATUS       current
        DESCRIPTION
            "This group contains objects for BS software upgrade."
        ::= { wmanDevMibGroups 2 }

wmanDevMibSsGroup     OBJECT-GROUP
        OBJECTS {-- SS configuration file encoding
                 wmanDevSsMicConfigSetting,
                 wmanDevSsVendorId,
                 wmanDevSsHwId,
                 wmanDevSsSwVersion,
                 wmanDevSsUpgradeFileName,
                 wmanDevSsSwUpgradeTftpServer,
                 wmanDevSsTftpServerTimeStamp,
```

```
                  wmanDevSsTrapControlRegister}
        STATUS       current
        DESCRIPTION
            "This group contains objects for SS."
        ::= { wmanDevMibGroups 3 }

wmanDevMibCmnGroup     OBJECT-GROUP
        OBJECTS {-- SNMP agent configuration
                 wmanDevCmnSnmpV1V2TrapDestIpAddrType,
                 wmanDevCmnSnmpV1V2TrapDestIpAddr,
                 wmanDevCmnSnmpV1V2TrapDestPort,
                 wmanDevCmnSnmpV1V2TrapDestRowStatus,
                 wmanDevCmnResetDevice,

                 -- Events and event notification
                 wmanDevCmnDeviceIndex,
                 wmanDevCmnEventLogEntryLimit,
                 wmanDevCmnEventLifeTimeLimit,
                 wmanDevCmnEventLogEntryLimitPerEventId,
                 wmanDevCmnEventLogSeverityThreshold,
                 wmanDevCmnEventLogWrapAroundBuffEnable,
                 wmanDevCmnEventLogLatestEvent,
                 wmanDevCmnEventLogPersistenceSupported,
                 wmanDevCmnEventLogResidualBuffThreshold,
                 wmanDevCmnEventDescription,
                 wmanDevCmnEventSeverity,
                 wmanDevCmnEventNotification,
                 wmanDevCmnEventNotificationOid,
                 wmanDevCmnEventLogIndex,
                 wmanDevCmnEventId,
                 wmanDevCmnEventLoggedTime,
                 wmanDevCmnEventLogDescription,
                 wmanDevCmnEventLogSeverity}
        STATUS       current
        DESCRIPTION
            "This group contains objects for SS."
        ::= { wmanDevMibGroups 4 }

wmanDevMibBsNotificationGroup     NOTIFICATION-GROUP
        NOTIFICATIONS {wmanDevBsEventTrap,
                       wmanDevBsLogBuffExceedThresholdTrap}
        STATUS       current
        DESCRIPTION
            "This group contains event notifications for BS."
        ::= { wmanDevMibGroups 5 }

wmanDevMibSsNotificationGroup     NOTIFICATION-GROUP
        NOTIFICATIONS {wmanDevSsEventTrap,
                       wmanDevSsLogBufferExceedThresholdTrap}
        STATUS       current
        DESCRIPTION
            "This group contains event notifications for SS."
        ::= { wmanDevMibGroups 6 }
END
```


13.2.3 wmanIf2BsMib

```
WMAN-IF2-BS-MIB DEFINITIONS ::= BEGIN

  IMPORTS
        MODULE-IDENTITY,
        OBJECT-TYPE,
        NOTIFICATION-TYPE,
        Unsigned32, Integer32, Counter32,
        Counter64
                FROM SNMPv2-SMI
        TEXTUAL-CONVENTION,
        MacAddress, RowStatus, TruthValue,
        TimeStamp, DateAndTime
                FROM SNMPv2-TC
        InetAddressType, InetAddress
                FROM INET-ADDRESS-MIB
        WmanIf2TcBsIdType, WmanIf2TcChannelNumber,
        WmanIf2TcCidType, WmanIf2TcGlobalSrvClass,
        WmanIf2TcHarqAckDelay, WmanIf2TcMacVersion,
        WmanIf2TcOfdmaCp, WmanIf2TcOfdmaFftSize,
        WmanIf2TcOfdmaFrame, WmanIf2TcFrameOffset,
        WmanIf2TcPwrCntlBits, WmanIf2TcFddDlGrpGap,
        WmanIf2TcAasBeamSel, WmanIf2TcTxPowerReport,
        WmanIf2TcFastFeedback, WmanIf2TcHarqAckRegion,
        WmanIf2TcRangingRegion, WmanIf2TcSoundingRegion,
        WmanIf2TcPermutationTyp, WmanIf2TcRssiCinrAvg,
        WmanIf2TcMihCapability, WmanIf2TcHoSupportType,
        WmanIf2TcSfDirection, WmanIf2TcArqDelvInOrder,
        WmanIf2TcUlPhyModeId, WmanIf2TcCellType,
        WmanIf2TcPwrCntlMode, WmanIf2TcCidDescriptor
                FROM WMAN-IF2-TC-MIB
        OBJECT-GROUP,
        MODULE-COMPLIANCE,
        NOTIFICATION-GROUP
                FROM SNMPv2-CONF
        ifIndex
                FROM IF-MIB;

wmanIf2BsMib MODULE-IDENTITY
        LAST-UPDATED    "200901280000Z" -- January 28, 2009
        ORGANIZATION    "IEEE 802.16"
        CONTACT-INFO
            "WG E-mail:  stds-802-16@ieee.org
             WG Chair:   Roger B. Marks
             Postal:     WiMAX Forum
             E-mail:     r.b.marks@ieee.org

             TG Chair:   Jonathan Labs
             Postal:     Wavesat Inc.
             E-mail:     JLabs@wavesat.com

             TG Contact: Phillip Barber
             Postal:     Huawei Technologies Co., Ltd
```

```
             E-mail:     pbarber@Huawei.com

             Editor:     Joey Chou
             Postal:     Intel Corporation
                         5000 W. Chandler Blvd,
                         Chandler, AZ 85227, USA
             E-mail:     joey.chou@intel.com"
        DESCRIPTION
            "This MIB Module defines managed objects for Base Station
             based on IEEE Std 802.16. The MIB contains managed objects
             that are common for both fixed and mobile Broadband
             Wireless Networks."
        REVISION        "200901280000Z"
        DESCRIPTION
            "Includes changeas per comment resolutions agreed at the
             San Diego meeting"
        REVISION        "200812010000Z"
        DESCRIPTION
            "Includes changeas per comment resolutions agreed at the
             Dallas meeting"
        REVISION        "200810010000Z"
        DESCRIPTION
            "Includes changeas per comment resolutions agreed at the
             Kobe meeting"
        REVISION        "200807220000Z"
        DESCRIPTION
            "Includes changes as per comment resolutions agreed at the
             Denver meeting"
        REVISION        "200805270000Z"
        DESCRIPTION
            "Includes changes as per comment resolutions agreed at the
             Macau meeting"
        REVISION        "200803310000Z"
        DESCRIPTION
            "Includes changes as per comment resolutions agreed at the
             Orlando meeting"
        REVISION        "200802110000Z"
        DESCRIPTION
            "Includes changes as per comment resolutions agreed at the
             Levi meeting"
        REVISION        "200711300000Z"
        DESCRIPTION
            "The first revision of WMAN-IF2-BS-MIB module"
        ::= { iso std(0) iso8802(8802) wman(16) 2 }

wmanIf2MibObjects    OBJECT IDENTIFIER ::= { wmanIf2BsMib 1 }
wmanIf2BsFm          OBJECT IDENTIFIER ::= { wmanIf2MibObjects 1 }
wmanIf2BsCm          OBJECT IDENTIFIER ::= { wmanIf2MibObjects 2 }
wmanIf2BsAm          OBJECT IDENTIFIER ::= { wmanIf2MibObjects 3 }
wmanIf2BsPm          OBJECT IDENTIFIER ::= { wmanIf2MibObjects 4 }
wmanIf2BsSm          OBJECT IDENTIFIER ::= { wmanIf2MibObjects 5 }

--
-- Textual Conventions
```



```
--
WmanIf2MbsZoneId ::= TEXTUAL-CONVENTION
        STATUS      current
        DESCRIPTION
            "MBS zone identifiers which BS is associated. An MBS zone
             identifier is 1 byte long.
             bits #0 - #6: are the MBS Zone Identifier,a value of 0
                           means that the neighbor BS is not
                           affiliated with any MBS zone
             bit       #7: is set to 0"
        REFERENCE
             "Table 574"
        SYNTAX      Integer32 (0 .. 127)

WmanIf2OfdmFecCodeType ::= TEXTUAL-CONVENTION
        STATUS      current
        DESCRIPTION
            "FEC code type and modulation type"
        REFERENCE
            "Table 572 and 579"
        SYNTAX      INTEGER {bpskCc1Over2(0),
                             qpskRsCcCc1Over2(1),
                             qpskRsCcCc3Over4(2),
                             sixteenQamRsCcCc1Over2(3),
                             sixteenQamRsCcCc3Over4(4),
                             sixtyFourQamRsCcCc2Over3(5),
                             sixtyFourQamRsCcCc3Over4(6),
                             qpskBtc1Over2(7),
                             qpskBtc3Over4(8),
                             sixteenQamBtc3Over4(9),
                             sixteenQamBtc4Over5(10),
                             sixtyFourQamBtc2Over3(11),
                             sixtyFourQamBtc5Over6(12),
                             qpskCtc1Over2(13),
                             qpskCtc2Over3(14),
                             qpskCtc3Over4(15),
                             sixteenQamCtc1Over2(16),
                             sixteenQamCtc3Over4(17),
                             sixtyFourQamCtc2Over3(18),
                             sixtyFourQamCtc3Over4(19)}

WmanIf2OfdmaUcdFecCode ::= TEXTUAL-CONVENTION
        STATUS      current
        DESCRIPTION
            "UCD FEC code type and modulation type"
        REFERENCE
            "Table 573"
        SYNTAX     INTEGER {qpskCc1Over2(0),
                             qpskCc3Over4(1),
                             sixteenQamCc1Over2(2),
                             sixteenQamCc3Over4(3),
                             sixtyFourQamCc1Over2(4),
                             sixtyFourQamCc2Over3(5),
                             sixtyFourQamCc3Over4(6),
```

```
                                qpskBtc1Over2(7),
                                qpskBtc3Over4(8),
                                sixteenQamBtc3Over5(9),
                                sixteenQamBtc4Over5(10),
                                sixtyFourQamBtc5Over8(11),
                                sixtyFourQamBtc4Over5(12),
                                qpskCtc1Over2(13),
                                reserved(14),
                                qpskCtc3Over4(15),
                                sixteenQamCtc1Over2(16),
                                sixteenQamCtc3Over4(17),
                                sixtyFourQamCtc1Over2(18),
                                sixtyFourQamCtc2Over3(19),
                                sixtyFourQamCtc3Over4(20),
                                sixtyFourQamCtc5Over6(21),
                                qpskZtCc1Over2(22),
                                qpskZtCc3Over4(23),
                                sixteenQamZtCc1Over2(24),
                                sixteenQamZtCc3Over4(25),
                                sixtyFourQamZtCc1Over2(26),
                                sixtyFourQamZtCc2Over3(27),
                                sixtyFourQamZtCc3Over4(28),
                                qpskLdpc1over2(29),
                                qpskLdpc2over3A(30),
                                qpskLdpc3over4A(31),
                                sixteenQamLdpc1over2(32),
                                sixteenQamLdpc2over3A(33),
                                sixteenQamLdpc3over4A(34),
                                sixtyFourQamLdpc1over2(35),
                                sixtyFourQamLdpc2over3A(36),
                                sixtyFourQamLdpc3over4A(37),
                                qpskLdpc2over3B(38),
                                qpskLdpc3over4B(39),
                                sixteenQamLdpc2over3B(40),
                                sixteenQamLdpc3over4B(41),
                                sixtyFourQamLdpc2over3B(42),
                                sixtyFourQamLdpc3over4B(43),
                                qpskCcOptIntv1over2(44),
                                qpskCcOptIntv3over4(45),
                                sixteenQamCcOptIntv1over2(46),
                                sixteenQamCcOptIntv3over4(47),
                                sixtyFourQamCcOptIntv2over3(48),
                                sixtyFourQamCcOptIntv3over4(49),
                                qpskLdpc5over6(50),
                                sixteenQamLdpc5over6(51),
                                sixtyFourQamLdpc5over6(52)}

WmanIf2OfdmaDcdFecCode ::= TEXTUAL-CONVENTION
        STATUS      current
        DESCRIPTION
            "DCD FEC code type and modulation type"
        REFERENCE
            "Table 580"
        SYNTAX     INTEGER {qpskCc1Over2(0),
```



```
                                qpskCc3Over4(1),
                                sixteenQamCc1Over2(2),
                                sixteenQamCc3Over4(3),
                                sixtyFourQamCc1Over2(4),
                                sixtyFourQamCc2Over3(5),
                                sixtyFourQamCc3Over4(6),
                                qpskBtc1Over2(7),
                                qpskBtc3Over4Or2Over3(8),
                                sixteenQamBtc3Over5(9),
                                sixteenQamBtc4Over5(10),
                                sixtyFourQamBtc2Over3Or5Over8(11),
                                sixtyFourQamBtc5Over6Or4Over5(12),
                                qpskCtc1Over2(13),
                                reserved14(14),
                                qpskCtc3Over4(15),
                                sixteenQamCtc1Over2(16),
                                sixteenQamCtc3Over4(17),
                                sixtyFourQamCtc1Over2(18),
                                sixtyFourQamCtc2Over3(19),
                                sixtyFourQamCtc3Over4(20),
                                sixtyFourQamCtc5Over6(21),
                                qpskZtCc1Over2(22),
                                qpskZtCc3Over4(23),
                                sixteenQamZtCc1Over2(24),
                                sixteenQamZtCc3Over4(25),
                                sixtyFourQamZtCc1Over2(26),
                                sixtyFourQamZtCc2Over3(27),
                                sixtyFourQamZtCc3Over4(28),
                                qpskLdpc1over2(29),
                                qpskLdpc2over3A(30),
                                qpskLdpc3over4A(31),
                                sixteenQamLdpc1over2(32),
                                sixteenQamLdpc2over3A(33),
                                sixteenQamLdpc3over4A(34),
                                sixtyFourQamLdpc1over2(35),
                                sixtyFourQamLdpc2over3A(36),
                                sixtyFourQamLdpc3over4A(37),
                                qpskLdpc2over3B(38),
                                qpskLdpc3over4B(39),
                                sixteenQamLdpc2over3B(40),
                                sixteenQamLdpc3over4B(41),
                                sixtyFourQamLdpc2over3B(42),
                                sixtyFourQamLdpc3over4B(43),
                                qpskCcOptIntv1over2(44),
                                qpskCcOptIntv3over4(45),
                                sixteenQamCcOptIntv1over2(46),
                                sixteenQamCcOptIntv3over4(47),
                                sixtyFourQamCcOptIntv2over3(48),
                                sixtyFourQamCcOptIntv3over4(49),
                                qpskLdpc5over6(50),
                                sixteenQamLdpc5over6(51),
                                sixtyFourQamLdpc5over6(52)}

WmanIf2PkmErrorCode ::= TEXTUAL-CONVENTION
```

```
        STATUS      current
        DESCRIPTION
            "This error code provides further information about an
             Authorization Reject, Key Reject, Authorization Invalid,
             or TEK Invalid.

               0 - no failure
               1 - unauthorized SS
               2 - unauthorized SAID
               3 - unsolicited
               4 - invalid key sequence
               5 - key request authentication failure

             The following are error code for permanent authorization
             failure that indicates any reattempts at authorization
             would continue to result in Authorization Rejects.

               6 - the BS does not have the CA certificate belonging
                   to the issuer of an SS certificate
               7 - SS certificate has an invalid signature
               8 - ASN.1 parsing failure during verification of SS
                   certificate
               9 - SS certificate is on the 'hot list'
               10 - inconsistencies between certificate data and data
                   in accompanying PKM attributes
               11 - SS and BS have incompatible security capabilities"
        REFERENCE
            "Table 595 Subclause 11.9.10"
        SYNTAX      INTEGER {noFailure(0),
                             unauthorizedSs(1),
                             unauthorizedSaid(2),
                             unsolicited(3),
                             invalidKeySequence(4),
                             keyReqAuthFailure(5),
                             umknownManufactur(6),
                             invalidSignature(7),
                             asn1ParsingFailure(8),
                             ssCaOnHotList(9),
                             dataInconsistency(10),
                             ssBsIncompatibleSc(11)}


WmanIf2DataEncryptAlgId ::= TEXTUAL-CONVENTION
        STATUS      current
        DESCRIPTION
            "Data encryption algorithm identifiers."
        REFERENCE
            "Table 597"
        SYNTAX      INTEGER {none(0),
                             des56BitCbcMode(1),
                             aes128BitCcmMode(2),
                             aes128BitCbcMode(3),
                             aes128BitCtrMode(128)}
```



```
WmanIf2DataAuthAlgId ::= TEXTUAL-CONVENTION
        STATUS      current
        DESCRIPTION
            "Data authentication algorithm identifiers."
        REFERENCE
            "Table 598"
        SYNTAX      INTEGER {noDataAuthentication(0),
                             aes128BitCcmMode(1)}

WmanIf2TekEncryptAlgId ::= TEXTUAL-CONVENTION
        STATUS      current
        DESCRIPTION
            "TEK encryption algorithm identifiers."
        REFERENCE
            "Table 599"
        SYNTAX      INTEGER {tripleDes128BitKey(1),
                             rsa1024BitKey(2),
                             aes128BitKeyEcbMode(3),
                             aes128BitKeyWrap(4)}

WmanIf2SaType ::= TEXTUAL-CONVENTION
        STATUS      current
        DESCRIPTION
            "The type of Security Association (SA)."
        REFERENCE
            "Table 602 in subclause 11.9.17"
        SYNTAX      INTEGER {primarySa(0),
                             staticSa(1),
                             dynamicSa(2)}

WmanIf2CertificateStat ::= TEXTUAL-CONVENTION
        STATUS      current
        DESCRIPTION
            "The reason why a SS's certificate is deemed valid
             or invalid:

             0 - return unknown if the SS is running PKM mode
             1 - means the certificate is valid because it chains
                 to a valid certificate
             2 - means the certificate is valid because it has been
                 provisioned to be trusted
             3 - means the certificate is invalid because it has been
                 provisioned to be untrusted.
             4 - means the certificate is invalid because it chains
                 to an untrusted certificate.
             5 - refer to errors in parsing, validity periods, etc,
                 of SS certificate
             6 - refer to errors in parsing, validity periods, etc,
                 of CA certificate"
        SYNTAX      INTEGER {unknown (0),
                             validSsChained (1),
                             validSsTrusted (2),
                             invalidSsUntrusted (3),
                             invalidCAUntrusted (4),
```

```
                              invalidSsOther (5),
                              invalidCAOther (6)}

-- Textual convention for capabilities encodings
WmanIf2CurrentTxPower ::= TEXTUAL-CONVENTION
        STATUS      current
        DESCRIPTION
            "The average parameter indicates the transmitted power used
             for the burst that carried the message. The parameter is
             reported in dBm and is quantized in 0.5 dBm steps ranging
             from -84 dBm (encoded 0x00) to 43.5 dBm (encoded 0xFF).
             Values outside this range shall be assigned the closest
             extreme. The parameter is only applicable to systems
             supporting the OFDM, or OFDMA PHY specifications. However,
             for the OFDM or OFDMA PHY, this value indicates the average
             transmitted power of each subcarrier for the burst which
             carried the message. However, for the OFDM or OFDMA PHY,
             this value indicates the average transmitted power of each
             subcarrier for the burst which carried the message."
        REFERENCE
            "Subclause 11.1.1"
        SYNTAX      Integer32 (0..255)

WmanIf2NumOfCid ::= TEXTUAL-CONVENTION
        STATUS      current
        DESCRIPTION
            "The object of this type shows the number of CIDs that
             SS can support."
        REFERENCE
            "Subclause 11.7.6"
        SYNTAX      Integer32 (1..65535)

WmanIf2MaxClassifiers ::= TEXTUAL-CONVENTION
        STATUS      current
        DESCRIPTION
            "The object of this type indicates the maximum number of
             admitted Classifiers that the SS is allowed to have."
        REFERENCE
            "Subclause 11.7.7.2"
        SYNTAX      Integer32 (0..65535)

WmanIf2BasicCapOptions ::= TEXTUAL-CONVENTION
        STATUS      current
        DESCRIPTION
            "This type combines all the basic SS capabilities
             (excluuding Phy and mobility specific) with the binary
             encodded fields. It reserves the space equivalent to the
             size of corresponding TLV and within this space it maps
             directly to the encoding specified in TLVs including all
             defined reserved bits."
        REFERENCE
            "Bit          subclauses:
             bit 0:       11.7.8.1 (ARQ support)
                 1-7:     reserved
```



```
        bit 8-9:     11.7.4 (IP version)
            10-15:   reserved
        bit 16-29:   11.7.7.1 (CS support)
            30-47:   reserved
        bit 48-49:   11.7.7.3 (PHS support)
            50-55:   reserved
        bit 56:      reserved
            57:      11.8.1 (BW allocation - duplex support)
            58-63:   reserved
        bit 64-65:   11.8.2 (PDU construction and transmission)
            66-71:   reserved
        bit 72:      11.7.8.6 (Packing)
            73-79:   reserved
        bit 80:      11.7.8.7 (Extended rtPS)
            81-87:   reserved
        bit 88-91:   11.7.10 (SMC IP address allocation method)
            92-95:   reserved
        bit 96-100:  11.7.20 (ARQ ACK type)
            101-103: reserved
        bit 104-120: 11.7.21 (Mac header support)
            121-127: reserved"
SYNTAX      BITS {arqSupport(0),
                  reserved1(1),
                  reserved2(2),
                  reserved3(3),
                  reserved4(4),
                  reserved5(5),
                  reserved6(6),
                  reserved7(7),
                  ipv4Support(8),
                  ipv6Support(9),
                  reserved10(10),
                  reserved11(11),
                  reserved12(12),
                  reserved13(13),
                  reserved14(14),
                  reserved15(15),
                  csSupportAtm(16),
                  csSupportIpv4(17),
                  csSupportIpv6(18),
                  csSupport802Dot3(19),
                  reserved20(20),
                  csSupportIpv4Over802Dot3(21),
                  csSupportIpv6Over802Dot3(22),
                  reserved23(23),
                  reserved24(24),
                  reserved25(25),
                  reserved26(26),
                  reserved27(27),
                  reserved28(28),
                  csSupportGpcs(29),
                  reserved30(30),
                  reserved31(31),
                  reserved32(32),
```

```
reserved33(33),
reserved34(34),
reserved35(35),
reserved36(36),
reserved37(37),
reserved38(38),
reserved39(39),
reserved40(40),
reserved41(41),
reserved42(42),
reserved43(43),
reserved44(44),
reserved45(45),
reserved46(46),
reserved47(47),
phsSupportAtm(48),
phsSupportPacket(49),
reserved50(50),
reserved51(51),
reserved52(52),
reserved53(53),
reserved54(54),
reserved55(55),
reserved56(56),
bwAllocSupportFullDuplex(57),
reserved58(58),
reserved59(59),
reserved60(60),
reserved61(61),
reserved62(62),
reserved63(63),
pduConstructionpiggybackedRequests(64),
pduConstructionFsn3Bits(65),
reserved66(66),
reserved67(67),
reserved68(68),
reserved69(69),
reserved70(70),
reserved71(71),
packingSupported(72),
reserved73(73),
reserved74(74),
reserved75(75),
reserved76(76),
reserved77(77),
reserved78(78),
reserved79(79),
extendedRtpsSupported(80),
reserved81(81),
reserved82(82),
reserved83(83),
reserved84(84),
reserved85(85),
reserved86(86),
```



```
                            reserved87(87),
                            smcIpAddressAllocDhcp(88),
                            smcIpAddressAllocMobileIpv4(89),
                            smcIpAddressAllocMobileDhcpv6(90),
                            smcIpAddressAllocMobileIpv6Autoconfig(91),
                            reserved92(92),
                            reserved93(93),
                            reserved94(94),
                            reserved95(95),
                            arqSelectiveAck(96),
                            arqCumulativeAck(97),
                            arqCumWithSelAckEntry(98),
                            arqCumWithBlockSeqAck(99),
                            arqSeqBlockAck(100),
                            reserved101(101),
                            reserved102(102),
                            reserved103(103),
                            headerSupportBwReqUlTxPowerReport(104),
                            headerSupportBwReqCinrReport(105),
                            headerSupportCqichAllocationReq(106),
                            headerSupportPhyChannelReport(107),
                            headerSupportBwReqUlSleepCntl(108),
                            headerSupportSnReport(109),
                            headerSupportFeedbackReport(110),
                            headerSupportSduSn(111),
                            headerSupportSduSnPeriod0(112),
                            headerSupportSduSnPeriod1(113),
                            headerSupportSduSnPeriod2(114),
                            headerSupportDlSleepControl(115),
                            headerSupportFeedbackRequest(116),
                            headerSupportMimcModeFeedback(117),
                            headerSupportUlTxPowerReport(118),
                            headerSupportMiniFeedback(119),
                            headerSupportSnRequest(120),
                            reserved121(121),
                            reserved122(122),
                            reserved123(123),
                            reserved124(124),
                            reserved125(125),
                            reserved126(126),
                            reserved127(127)}

WmanIf2MaxDsxFlowType ::= TEXTUAL-CONVENTION
        STATUS      current
        DESCRIPTION
            "The object of this type specifies the maximum number of
             concurrent DSA, DSC, or DSD transactions that may be
             outstanding."
        REFERENCE
            "Subclause 11.7.8.2"
        SYNTAX      Integer32 (0..255)

WmanIf2MaxMcaFlowType ::= TEXTUAL-CONVENTION
        STATUS      current
```

```
        DESCRIPTION
            "The object of this type specifies the maximum number of
             concurrent MCA transactions that may be outstanding."
        REFERENCE
            "Subclause 11.7.8.3"
        SYNTAX      Integer32 (0..255)

WmanIf2MaxMcpGroupCid ::= TEXTUAL-CONVENTION
        STATUS      current
        DESCRIPTION
            "The object of this type indicates the maximum number of
             simultaneous Multicast Polling Groups the SS is
             capable of belonging to."
        REFERENCE
            "Subclause 11.7.8.4"
        SYNTAX      Integer32 (0..255)

WmanIf2MaxMacLevel ::= TEXTUAL-CONVENTION
        STATUS      current
        DESCRIPTION
            "maximum amount of MAC level data including MAC headers and
             HARQ retransmission bursts the MS is capable of processing
             in the DL/UL part of a single MAC frame."
        REFERENCE
            "Subclause 11.7.8.5"
        SYNTAX      Integer32 (0..65535)

WmanIf2MaxNumBurstTx ::= TEXTUAL-CONVENTION
        STATUS      current
        DESCRIPTION
            "Maximum number of bursts transmitted concurrently to the MS
             , including all bursts without CID or with CIDs matching
             the MS's CIDs."
        REFERENCE
            "Subclause 11.7.8.8"
        SYNTAX      Integer32 (1..16)

WmanIf2MaxNumProvSf ::= TEXTUAL-CONVENTION
        STATUS      current
        DESCRIPTION
            "When a BS is to transmit multiple DSA transactions for
             provisioned service flows, this object indicates how many
             DSA transactions with provisioned service flows will be
             transmitted."
        REFERENCE
            "Subclause 11.7.18"
        SYNTAX      Integer32 (0..255)

WmanIf2SsTransitionGap ::= TEXTUAL-CONVENTION
        STATUS      current
        DESCRIPTION
            "This field indicates the transition speed SSTTG and SSRTG
             for TDD and H-FDD SSs. Allowed values are:
               OFDM mode: TDD and H-FDD 0..100
```



```
               Other modes: TDD: 0..50; H-FDD: 0..100"
        REFERENCE
            "Subclause 11.8.3.1"
        SYNTAX      Integer32 (0..100)

WmanIf2MaxTxPowerType ::= TEXTUAL-CONVENTION
        STATUS      current
        DESCRIPTION
            "This type is used to define maximum available power for
             BPSK, QPSK, 16-QAM and 64-QAM constellations. The maximum
             power parameters are reported in dBm and quantized in 0.5
             dBm steps ranging from -64 dBm (encoded 0x00) to 63.5 dBm
             (encoded 0xFF). Values outside this range shall be
             assigned the closest extreme. SSs that do not support
             QAM64 shall report the value of 0x00 in the maximum QAM64
             power field."
        REFERENCE
            "Subclause 11.8.3.2"
        SYNTAX      Integer32 (0..255)

WmanIf2OfdmCapOptions ::= TEXTUAL-CONVENTION
        STATUS      current
        DESCRIPTION
            "This type combines all OFDM specific SS capabilities with
             the binary encodded fields. It reserves the space
             equivalent to the size of corresponding TLV and within this
             space it maps directly to the encoding specified in TLVs
             including all defined reserved bits."
        REFERENCE
            "Bit          subclauses:
             bits 0-1:    11.8.3.4.1 (OFDM FFT sizes)
                  2-7:    reserved
             bits 8-13:   11.8.3.4.2 (OFDM SS demodulator)
                  14-15:  reserved
             bits 16-21:  11.8.3.4.3 (OFDM SS modulator)
                  22-23:  reserved
             bits 24:     11.8.3.4.4 (OFDM TC sublayer)
                  25-31:  reserved
             bits 32-33:  11.8.3.4.5 (OFDM private map)
                  34-39:  reserved
             bits 40-41:  11.8.3.4.6 (OFDM SS uplink power control)
                  42-47:  reserved"
        SYNTAX      BITS {ofdmFftSize256(0),
                          ofdmFftSize2048(1),
                          reserved2(2),
                          reserved3(3),
                          reserved4(4),
                          reserved5(5),
                          reserved6(6),
                          reserved7(7),
                          ofdmSsDemodulatorQam64(8),
                          ofdmSsDemodulatorBtc(9),
                          ofdmSsDemodulatorCtc(10),
                          ofdmSsDemodulatorStc(11),
```

```
                              ofdmSsDemodulatorAas(12),
                              ofdmSsDemodulatorSuchan(13),
                              reserved14(14),
                              reserved15(15),
                              ofdmSsModulatorQam64(16),
                              ofdmSsModulatorBtc(17),
                              ofdmSsModulatorCtc(18),
                              ofdmSsModulatorSubchan(19),
                              ofdmSsModulatorFocusedCtBwReq(20),
                              ofdmSsModulatorUlCyclicDelay(21),
                              reserved22(22),
                              reserved23(23),
                              ofdmTcSublayerSupport(24),
                              reserved25(25),
                              reserved26(26),
                              reserved27(27),
                              reserved28(28),
                              reserved29(29),
                              reserved30(30),
                              reserved31(31),
                              ofdmRegularMap(32),
                              ofdmCompressedMap(33),
                              reserved34(34),
                              reserved35(35),
                              reserved36(36),
                              reserved37(37),
                              reserved38(38),
                              reserved39(39),
                              ofdmUlOpenLoopPwrCtrl(40),
                              ofdmUlAasPreamblePwrCtrl(41),
                              reserved42(42),
                              reserved43(43),
                              reserved44(44),
                              reserved45(45),
                              reserved46(46),
                              reserved47(47),
                              reserved48(48)}

WmanIf2MinNumFrmPwrCtrl ::= TEXTUAL-CONVENTION
        STATUS      current
        DESCRIPTION
            "Defines the minimum number of frames that SS takes to
             switch from the open loop power control scheme to the
             closed loop power control scheme or vice versa."
        REFERENCE
            "Subclause 11.8.3.4.6"
        SYNTAX      Integer32 (0..255)

WmanIf2OfdmaCapOptions ::= TEXTUAL-CONVENTION
        STATUS      current
        DESCRIPTION
            "This type combines all OFDMA specific SS capabilities with
             the binary encodded fields. It reserves the space
             equivalent to the size of corresponding TLV and within this
```



```
     space it maps directly to the encoding specified in TLVs
     including all defined reserved bits."
REFERENCE
    "Bit              subclauses:
     bits 0:          reserved
          1-4:        11.8.3.5.1 (OFDMA FFT sizes)
          5-7:        reserved
     bits 8-14,16-18: 11.8.3.5.2 (OFDMA SS demodulator)
          15,19-23:   reserved
     bits 24-31:      11.8.3.5.3 (OFDMA SS modulator)
     bits 32-39:      11.8.3.5.4 (OFDMA permutation)
     bits 40-61:      11.8.3.5.5 (OFDMA SS demodulator for MIMO)
          62-63:      reserved
     bits 64-71:      11.8.3.5.6 (OFDMA private map)
     bits 72-76:      11.8.3.5.7 (OFDMA AAS)
          77-79:      reserved
     bits 80-87:      11.8.3.5.8 (OFDMA CINR measurements)
     bits 88-89:      11.8.3.5.9 (OFDMA power control)
          90-95:      reserved
     bits 96-100:     11.8.3.5.10 (OFDMA map)
          101-103:    reserved
     bits 104-106,108-111: 11.8.3.5.11 (OFDMA uplink control)
          107:        reserved
     bits 112-123:    11.8.3.5.12 (OFDMA CSIT capability)
          124-127:    reserved"
SYNTAX      BITS {reserved0(0),
                  ofdmaFftSize2048(1),
                  ofdmaFftSize128(2),
                  ofdmaFftSize512(3),
                  ofdmaFftSize1024(4),
                  reserved5(5),
                  reserved6(6),
                  reserved7(7),
                  ofdmaDemodulatorQam64(8),
                  ofdmaDemodulatorBtc(9),
                  ofdmaDemodulatorCtc(10),
                  ofdmaDemodulatorStc(11),
                  ofdmaDemodulatorCcWithInterleaver(12),
                  ofdmaDemodulatorHarqChase(13),
                  ofdmaDemodulatorHarqCtcIr(14),
                  reserved15(15),
                  ofdmaDemodulatorHarqCcIr(16),
                  ofdmaDemodulatorLdpc(17),
                  ofdmaDemodulatorDedicatedPilots(18),
                  reserved19(19),
                  reserved20(20),
                  reserved21(21),
                  reserved22(22),
                  reserved23(23),
                  ofdmaModulatorQam64(24),
                  ofdmaModulatorBtc(25),
                  ofdmaModulatorCtc(26),
                  ofdmaModulatorStc(27),
                  ofdmaModulatorHarqChase(28),
```

```
ofdmaModulatorHarqCtcIr(29),
ofdmaModulatorHarqCcIr(30),
ofdmaModulatorHarqLdpc(31),
odfmaPermutationOptionalPusc(32),
odfmaPermutationOptionalFusc(33),
odfmaPermutationAmc1x6(34),
odfmaPermutationAmc2x3(35),
odfmaPermutationAmc3x2(36),
odfmaPermutationAmcWithHarqMap(37),
odfmaPermutationTusc1(38),
odfmaPermutationTusc2(39),
ofdmaDemodMimo2AntStcMatrixA(40),
ofdmaDemodMimo2AntStcMatrixBVCoding(41),
ofdmaDemodMimo2AntStcMatrixBHCoding(42),
ofdmaDemodMimo4AntStcMatrixA(43),
ofdmaDemodMimo4AntStcMatrixBVCoding(44),
ofdmaDemodMimo4AntStcMatrixBHCoding(45),
ofdmaDemodMimo4AntStcMatrixCVCoding(46),
ofdmaDemodMimo4AntStcMatrixCHCoding(47),
ofdmaDemodMimo3AntStcMatrixA(48),
ofdmaDemodMimo3AntStcMatrixB(49),
ofdmaDemodMimo3AntStcMatrixCVCoding(50),
ofdmaDemodMimo3AntStcMatrixCHCoding(51),
ofdmaDemodMimoCalcPrecodeWight(52),
ofdmaDemodMimoAdaptiveRateCtrl(53),
ofdmaDemodMimoCalcChanMatrix(54),
ofdmaDemodMimoAntGroup(55),
ofdmaDemodMimoAntSelect(56),
ofdmaDemodMimoCodebookPrecode(57),
ofdmaDemodMimoLongTermPrecode(58),
ofdmaDemodMimoMidamble(59),
ofdmaDemodAllocGranDlPuscStc(60),
ofdmaDemodConcurentAllocDlPuscStc(61),
ofdmaDemodDedicatedPilotMatrixB(62),
ofdmaDemodDedicatedPilotBurst(63),
ofdmaPrivateMapHarqMap(64),
ofdmaPrivateMap(65),
ofdmaPrivateMapReduced(66),
ofdmaPrivateMapChainEnable(67),
ofdmaPrivateMapDlFrameOffset(68),
ofdmaPrivateMapUlFrameOffset(69),
ofdmaPrivateMapChainConcurency0(70),
ofdmaPrivateMapChainConcurency1(71),
ofdmaAasZone(72),
ofdmaAasDiverityMapScan(73),
ofdmaAasFeedbackRsp(74),
ofdmaAasDlPreamble(75),
ofdmaAasUlPreamble(76),
reserved77(77),
reserved78(78),
reserved79(79),
ofdmaCinrPhysicalPreamble(80),
ofdmaCinrPhysicalPilotSubc(81),
ofdmaCinrPhysicalDataSubc(82),
```



```
                                ofdmaCinrEffectivePreamble(83),
                                ofdmaCinrEffectivePilotSubc(84),
                                ofdmaCinrEffectiveDataSubc(85),
                                ofdmaCinr2CqiChannel(86),
                                ofdmaFreqSelectivityReport(87),
                                ofdmaPwrCtrlOpenLoop(88),
                                ofdmaPwrCtrlAasPreamble(89),
                                reserved90(90),
                                reserved91(91),
                                reserved92(92),
                                reserved93(93),
                                reserved94(94),
                                reserved95(95),
                                ofdmaMapHarq(96),
                                ofdmaMapExtendedHarqIe(97),
                                ofdmaMapSubMapForFirstZone(98),
                                ofdmaMapSubMapForOtherZones(99),
                                ofdmaMapDlRegionDefinition(100),
                                reserved101(101),
                                reserved102(102),
                                reserved103(103),
                                ofdmaUlCtrlt3BitMimoFastFeedback(104),
                                ofdmaUlCtrltEnhancedFastFeedback(105),
                                ofdmaUlCtrltUlAck(106),
                                reserved107(107),
                                ofdmaUlCtrltUepFastFeedback(108),
                                ofdmaUlCtrltFastDlMeasurementFeedback(109),
                                ofdmaUlCtrltPriSecFastFeedback(110),
                                ofdmaDiucCqiFastFeedback(111),
                                ofdmaCsitTypeA(112),
                                ofdmaCsitTypeB(113),
                                ofdmaPowerAssignment(114),
                                ofdmaSoundingRspTime0(115),
                                ofdmaSoundingRspTime1(116),
                                ofdmaSoundingRspTime2(117),
                                ofdmaMaxSimuSoundInst0(118),
                                ofdmaMaxSimuSoundInst1(119),
                                ofdmaMaxSimuSoundInst2(120),
                                ofdmaMaxSimuSoundInst3(121),
                                ofdmaNoP9Or18ForCsitTypeA(122),
                                reserved123(123),
                                reserved124(124),
                                reserved125(125),
                                reserved126(126),
                                reserved127(127)}

WmanIf2OfdmaCapOptions2 ::= TEXTUAL-CONVENTION
        STATUS      current
        DESCRIPTION
            "This type combines all OFDMA specific SS capabilities with
             the binary encodded fields. It reserves the space
             equivalent to the size of corresponding TLV and within this
             space it maps directly to the encoding specified in TLVs
             including all defined reserved bits."
```

```
REFERENCE
    "Bit          subclauses:
     bits 0-7:    11.8.3.5.13 (OFDMA max bursts in HARQ)
     bits 8-16:   11.8.3.5.14 (OFDMA modulator for MIMO)
    bits 17-18:  11.8.3.5.15 (SDMA Pilot capability)
          19-23:  reserved
     bits 24-25:  11.8.3.5.16 (OFDMA multiple DL burst profile)
          26-31:  reserved
     bits 32-36:  11.8.3.5.17.1 (OFDMA HARQ incremental buf DL)
          37-39:  reserved
     bits 40-44:  11.8.3.5.17.1 (OFDMA HARQ incremental buf UL)
          45-47:  reserved
     bits 48-54:  11.8.3.5.17.2 (OFDMA HARQ chase DL)
          55:     reserved
     bits 56-62:  11.8.3.5.17.2 (OFDMA HARQ chase UL)
          63:     reserved
     bits 64-70:  11.8.3.5.18 (OFDMA parameter set)
          71:     reserved"
SYNTAX      BITS {ofdmaMaxHarqBurstsUl0(0),
                  ofdmaMaxHarqBurstsUl1(1),
                  ofdmaMaxHarqBurstsUl2(2),
                  ofdmaMaxHarqBurstsUlNonHarqIncluded(3),
                  ofdmaMaxHarqBurstsDl0(4),
                  ofdmaMaxHarqBurstsDl1(5),
                  ofdmaMaxHarqBurstsDl2(6),
                  ofdmaMaxHarqBurstsDl3(7),
                  ofdmaMimoMod2AntStcMatrixA(8),
                  ofdmaMimoMod2AntStcMatrixBVCoding(9),
                  ofdmaMimoMod2AntStcMatrixBHCoding(10),
                  ofdmaMimoModBeamforming(11),
                  ofdmaMimoModAdaptiveRateControl(12),
                  ofdmaMimoModSingleAnt(13),
                  ofdmaMimoModCollaborativeSm1Ant(14),
                  ofdmaMimoModCollaborativeSm2Ants(15),
                  ofdmaMimoModDisableUlSubchRotation(16),
                  ofdmaSdmaPilotPatternSupport0(17),
                  ofdmaSdmaPilotPatternSupport1(18),
                  reserved19(19),
                  reserved20(20),
                  reserved21(21),
                  reserved22(22),
                  reserved23(23),
                  ofdmaDlMultiFecTypes(24),
                  ofdmaUlMultiFecTypes(25),
                  reserved26(26),
                  reserved27(27),
                  reserved28(28),
                  reserved29(29),
                  reserved30(30),
                  reserved31(31),
                  ofdmaHarqIncrBufDlNep0(32),
                  ofdmaHarqIncrBufDlNep1(33),
                  ofdmaHarqIncrBufDlNep2(34),
                  ofdmaHarqIncrBufDlNep3(35),
```



```
                            ofdmaHarqIncrBufDlAggFlag(36),
                            reserved37(37),
                            reserved38(38),
                            reserved39(39),
                            ofdmaHarqIncrBufUlNep0(40),
                            ofdmaHarqIncrBufUlNep1(41),
                            ofdmaHarqIncrBufUlNep2(42),
                            ofdmaHarqIncrBufUlNep3(43),
                            ofdmaHarqIncrBufUlAggFlag(44),
                            reserved45(45),
                            reserved46(46),
                            reserved47(47),
                            ofdmaHarqChaseBufDlComb0(48),
                            ofdmaHarqChaseBufDlComb1(49),
                            ofdmaHarqChaseBufDlComb2(50),
                            ofdmaHarqChaseBufDlComb3(51),
                            ofdmaHarqChaseBufDlComb4(52),
                            ofdmaHarqChaseBufDlComb5(53),
                            ofdmaHarqChaseBufDlAggFlag(54),
                            reserved55(55),
                            ofdmaHarqChaseBufUlComb0(56),
                            ofdmaHarqChaseBufUlComb1(57),
                            ofdmaHarqChaseBufUlComb2(58),
                            ofdmaHarqChaseBufUlComb3(59),
                            ofdmaHarqChaseBufUlComb4(60),
                            ofdmaHarqChaseBufUlComb5(61),
                            ofdmaHarqChaseBufUlAggFlag(62),
                            reserved63(63),
                            odfmaParamSetPhyA(64),
                            odfmaParamSetPhyB(65),
                            odfmaParamSetHarq0(66),
                            odfmaParamSetHarq1(67),
                            odfmaParamSetHarq2(68),
                            odfmaParamSetMacA(69),
                            odfmaParamSetMacB(70),
                            reserved71(71)}

WmanIf2OfdmaNoHarqChan ::= TEXTUAL-CONVENTION
        STATUS      current
        DESCRIPTION
            "Specifies the number of H-ARQ channels (n) the SS supports,
             where n = 1..16. The value of this object should be 0..15."
        REFERENCE
            "Subclause 11.8.3.5.2 (demodulator), 11.8.3.5.3 (modulator)"
        SYNTAX      Integer32 (0..15)

WmanIf2SdmaPilotCap ::= TEXTUAL-CONVENTION
        STATUS      current
        DESCRIPTION
            "This field indicates SDMA pilot pattern support for AMC
             zone."
        REFERENCE
            "Subclause 11.8.3.5.15"
        SYNTAX      INTEGER {noSupport(0),
```

```
                              sdmaPilotAandB(1),
                              allSdmaPilotPatterns(2)}

WmanIf2BasicCapOptions2 ::= TEXTUAL-CONVENTION
        STATUS      current
        DESCRIPTION
            "This type combines all the basic SS capabilities
             (excluuding Phy and mobility specific) with the binary
             encodded fields. It reserves the space equivalent to the
             size of corresponding TLV and within this space it maps
             directly to the encoding specified in TLVs including all
             defined reserved bits."
        REFERENCE
            "Bit         subclauses:
             bit 0-1:    11.8.4.1 (Pkm version)
                 2-7:    reserved
             bit 8-13:   11.8.4.2 (Authorization policy support)
                 14-15:  reserved
             bit 16:     11.8.4.3 (MAC mode - HMAC)
                 17:     reserved
                 18-21:  11.8.4.3 (MAC mode - HMAC follow up)
                 22-23:  reserved
             bit 24-26:  11.8.5 (Extended subheader support)
                 27-31:  reserved
             bit 32-35:  11.7.8.9 (Co-located coexistence capability)
                 36-39:  reserved
             bit 40:     11.7.8.10 (H-FDD sleep capabilities)
                 41-47:  reserved"
        SYNTAX      BITS {pkmVersionSupport1(0),
                          pkmVersionSupport2(1),
                          reserved2(2),
                          reserved3(3),
                          reserved4(4),
                          reserved5(5),
                          reserved6(6),
                          reserved7(7),
                          authPolicySupportRsaInitialEntry(8),
                          authPolicySupportEapInitialEntry(9),
                          reserved10(10),
                          reserved11(11),
                          authPolicySupportRsaReentry(12),
                          authPolicySupportEapReentry(13),
                          reserved14(14),
                          reserved15(15),
                          macModeHmac(16),
                          reserved17(17),
                          macModeHmac64(18),
                          macModeHmac80(19),
                          macModeHmac96(20),
                          macModeCmac(21),
                          reserved22(22),
                          reserved23(23),
                          extSubheader(24),
                          headerSupportShortPduSn(25),
```



```
                            headerSupportLongPduSn(26),
                            groupDsxSupport(27),
                            reserved28(28),
                            reserved29(29),
                            reserved30(30),
                            reserved31(31),
                            pscCoexistanceMode1(32),
                            pscCoexistanceMode2(33),
                            sleepModePscCoexistance(34),
                            ulBandAmcPscCoexistance(35),
                            reserved36(36),
                            reserved37(37),
                            reserved38(38),
                            reserved39(39),
                            sleepModeHfdd(40),
                            reserved41(41),
                            reserved42(42),
                            reserved43(43),
                            reserved44(44),
                            reserved45(45),
                            reserved46(46),
                            reserved47(47)}

WmanIf2MaxPkmFlowType ::= TEXTUAL-CONVENTION
        STATUS      current
        DESCRIPTION
            "The object of this type specifies the maximum number of
             concurrent PKM transactions that may be outstanding."
        REFERENCE
            "Subclause 11.8.4.5"
        SYNTAX      Integer32 (0..255)

WmanIf2MaxNumOfSaType ::= TEXTUAL-CONVENTION
        STATUS      current
        DESCRIPTION
            "This field specifies maximum number of supported
             security association of the SS."
        REFERENCE
            "Subclause 11.8.4.6"
        SYNTAX      Integer32 (0..255)


WmanIf2SaServiceType ::= TEXTUAL-CONVENTION
        STATUS      current
        DESCRIPTION
            "This attribute indicates service types of the corresponding
             SA type. This attribute shall be defined only when the SA
             type is Static SA or Dynamic SA. The GTEK shall be used to
             encrypt connection for group multicast service. The MTK
             shall be used to encrypt connection for MBS service."
        REFERENCE
            "Subclause 11.9.34"
        SYNTAX      INTEGER {unicastService(0),
                             groupMulticastService(1),
```

```
                              mbsService(2)}

WmanIf2HfddUserGroups ::= TEXTUAL-CONVENTION
        STATUS      current
        DESCRIPTION
            "Indicates two group of users for H-FDD operation."
        SYNTAX      INTEGER {hfddGroup1(1),
                             hfddGroup2(2)}

WmanIf2OfdmFrame ::= TEXTUAL-CONVENTION
         STATUS      current
         DESCRIPTION
             "Frame duration for OFDM PHY"
         REFERENCE
             "Table 269"
         SYNTAX INTEGER {twoPointFiveMs(0),
                         fourMs(1),
                         fiveMs(2),
                         eightMs(3),
                         tenMs(4),
                         twelvePointFiveMs(5),
            twentyMs(6)}

WmanIf2PmMeasureBitMap ::= TEXTUAL-CONVENTION
        STATUS      current
        DESCRIPTION
            "A bit of of this object is set to '1' if the corresponding
             performance measurement is enable. When it is set to '0',
             the corresponding measurement is disable."
        SYNTAX      BITS {rssiCinrMetrics(0),
                          startupMetrics(1),
                          throughputMetrics(2),
                          networkEntryMetrics(3),
                          packetErrorRate(4),
                          handoverMetrics(5),
                          userMetrics(6),
                          cidMetrics(7),
                          serviceFlowMetrics(8),
                          arqHarqMetrics(9),
                          authenticationMetrics(10)}

WmanIf2MimoPrecoding ::= TEXTUAL-CONVENTION
        STATUS      current
        DESCRIPTION
            "Types to setup or tear-down long-term precoding with
             feedback via PRC-LT-CTRL message.
             0 - turn off
             1 - turn on"
        REFERENCE
            "Table 163"
        SYNTAX      INTEGER {turnOff(0),
                             turnOn(1)}

--
```



```
-- wmanIf2BsFm group - containing tables and objects related to Fault
--                     Management (i.e. BS SNMP Trap objects)
--
wmanIf2BsTrapControl     OBJECT IDENTIFIER ::= {wmanIf2BsFm 1}
wmanIf2BsTrapDefinitions OBJECT IDENTIFIER ::= {wmanIf2BsFm 2}

-- This object groups all NOTIFICATION-TYPE objects for BS.
-- It is defined following RFC2758 sections 8.5 and 8.6
-- for the compatibility with SNMPv1.
wmanIf2BsTrapPrefix OBJECT IDENTIFIER ::= { wmanIf2BsTrapDefinitions 0 }

wmanIf2BsTrapControlRegister    OBJECT-TYPE
        SYNTAX      BITS {wmanIf2BsSsStatusNotification (0),
                          wmanIf2BsSsDynamicServiceFail (1),
                          wmanIf2BsSsRssiStatusChange   (2),
                          wmanIf2BsSsRegister           (3),
                          wmanIf2BsSsPkmFail            (4),
                          wmanIf2BsStartupMetrics       (5),
                          wmanIf2BsThroughputMetrics    (6),
                          wmanIf2BsNetworkEntryMetrics  (7),
                          wmanIf2BsPacketErrorRate      (8),
                          wmanIf2BsHandoverMetrics      (9),
                          wmanIf2BsUserMetrics          (10),
                          wmanIf2BsCidMetrics           (11),
                          wmanIf2BsServiceFlowMetrics   (12),
                          wmanIf2BsArqHarqMetrics       (13),
                          wmanIf2BsMacMetrics           (14)}
        MAX-ACCESS read-write
        STATUS     current
        DESCRIPTION
            "The object is used to enable or disable Base Station traps.
             From left to right, the set bit indicates the corresponding
             Base Station trap is enabled."
        ::= { wmanIf2BsTrapControl 1 }

wmanIf2BsStatusTrapControlRegister    OBJECT-TYPE
        SYNTAX      BITS {unused(0),
                          ssInitRangingSucc(1),
                          ssInitRangingFail(2),
                          ssRegistered(3),
                          ssRegistrationFail(4),
                          ssDeregistered(5),
                          ssBasicCapabilitySucc(6),
                          ssBasicCapabilityFail(7),
                          ssAuthorizationSucc(8),
                          ssAuthorizationFail(9),
                          tftpSucc(10),
                          tftpFail(11),
                          sfCreationSucc(12),
                          sfCreationFail(13)}
        MAX-ACCESS read-write
        STATUS     current
        DESCRIPTION
            "The object is used to enable or disable Base Station status
```

```
             notification traps. The set bit indicates the corresponding
             Base Station trap is enabled."
        ::= { wmanIf2BsTrapControl 2 }

--
-- BS threshold Definitions
--
wmanIf2BsThresholdConfigTable OBJECT-TYPE
        SYNTAX      SEQUENCE OF WmanIf2BsThresholdConfigEntry
        MAX-ACCESS  not-accessible
        STATUS      current
        DESCRIPTION
            "This table contains threshold objects that can be set
             to detect the threshold crossing events."
        ::= { wmanIf2BsTrapControl 3 }

wmanIf2BsThresholdConfigEntry OBJECT-TYPE
        SYNTAX      WmanIf2BsThresholdConfigEntry
        MAX-ACCESS  not-accessible
        STATUS      current
        DESCRIPTION
            ""
        INDEX     { ifIndex }
        ::= { wmanIf2BsThresholdConfigTable 1 }

WmanIf2BsThresholdConfigEntry ::= SEQUENCE {
        wmanIf2BsRssiLowThreshold               Integer32,
        wmanIf2BsRssiHighThreshold              Integer32}

wmanIf2BsRssiLowThreshold OBJECT-TYPE
        SYNTAX      Integer32
        UNITS       "dBm"
        MAX-ACCESS  read-write
        STATUS      current
        DESCRIPTION
            "Low threshold for generating the RSSI alarm."
        ::= { wmanIf2BsThresholdConfigEntry 1 }

wmanIf2BsRssiHighThreshold OBJECT-TYPE
        SYNTAX      Integer32
        UNITS       "dBm"
        MAX-ACCESS  read-write
        STATUS      current
        DESCRIPTION
            "High threshold for clearing the RSSI alarm."
        ::= { wmanIf2BsThresholdConfigEntry 2 }

--
-- Subscriber station Notification Objects Definitions
--
wmanIf2BsSsNotificationObjectsTable OBJECT-TYPE
        SYNTAX      SEQUENCE OF WmanIf2BsSsNotificationObjectsEntry
        MAX-ACCESS  not-accessible
        STATUS      current
```



```
        DESCRIPTION
            "This table contains SS notification objects that have been
             reported by the trap."
        ::= { wmanIf2BsTrapDefinitions 1 }

wmanIf2BsSsNotificationObjectsEntry OBJECT-TYPE
        SYNTAX      WmanIf2BsSsNotificationObjectsEntry
        MAX-ACCESS  not-accessible
        STATUS      current
        DESCRIPTION
            "This table provides one row for each SS that has generated
             traps."
        INDEX     { ifIndex, wmanIf2BsSsNotificationMacAddr }
        ::= { wmanIf2BsSsNotificationObjectsTable 1 }

WmanIf2BsSsNotificationObjectsEntry ::= SEQUENCE {
        wmanIf2BsSsNotificationMacAddr          MacAddress,
        wmanIf2BsSsStatusValue                  Integer32,
        wmanIf2BsSsStatusInfo                   OCTET STRING,
        wmanIf2BsDynamicServiceType             Integer32,
        wmanIf2BsDynamicServiceFailReason       OCTET STRING,
        wmanIf2BsSsRssiStatus                   Integer32,
        wmanIf2BsSsRssiStatusInfo               OCTET STRING,
        wmanIf2BsSsRegisterStatus               Integer32,
        wmanIf2BsDynamicServiceFailSfid         Unsigned32,
        wmanIf2BsEventNotificationTime          TimeStamp}

wmanIf2BsSsNotificationMacAddr OBJECT-TYPE
        SYNTAX      MacAddress
        MAX-ACCESS  read-only
        STATUS      current
        DESCRIPTION
            "The MAC address of the SS, reporting the notification."
        ::= { wmanIf2BsSsNotificationObjectsEntry 1 }

wmanIf2BsSsStatusValue  OBJECT-TYPE
        SYNTAX      INTEGER {ssInitRangingSucc(1),
                             ssInitRangingFail(2),
                             ssRegistered(3),
                             ssRegistrationFail(4),
                             ssDeregistered(5),
                             ssBasicCapabilitySucc(6),
                             ssBasicCapabilityFail(7),
                             ssAuthorizationSucc(8),
                             ssAuthorizationFail(9),
                             tftpSucc(10),
                             tftpFail(11),
                             sfCreationSucc(12),
                             sfCreationFail(13)}
        MAX-ACCESS  read-only
        STATUS      current
        DESCRIPTION
            "This object indicates the status of a SS, as it goes
             through network entry and initialization procedure."
```

```
        ::= { wmanIf2BsSsNotificationObjectsEntry 2 }

wmanIf2BsSsStatusInfo  OBJECT-TYPE
        SYNTAX      OCTET STRING (SIZE(0..255))
        MAX-ACCESS  read-only
        STATUS      current
        DESCRIPTION
            "This object indicates the reason of SS's status change."
        ::= { wmanIf2BsSsNotificationObjectsEntry 3 }

wmanIf2BsDynamicServiceType  OBJECT-TYPE
        SYNTAX      INTEGER {bsSfCreationReq(1),
                             bsSfCreationRsp(2),
                             bsSfCreationAck(3)}
        MAX-ACCESS  read-only
        STATUS      current
        DESCRIPTION
            "This object indicates the dynamic service flow
             creation command type."
        ::= { wmanIf2BsSsNotificationObjectsEntry 4 }

wmanIf2BsDynamicServiceFailReason  OBJECT-TYPE
        SYNTAX      OCTET STRING (SIZE(0..255))
        MAX-ACCESS  read-only
        STATUS      current
        DESCRIPTION
            "This object indicates the reason why the service flow
             creation has failed."
        ::= { wmanIf2BsSsNotificationObjectsEntry 5 }

wmanIf2BsSsRssiStatus  OBJECT-TYPE
        SYNTAX      INTEGER {bsRssiAlarm(1),
                             bsRssiNoAlarm(2)}
        MAX-ACCESS  read-only
        STATUS      current
        DESCRIPTION
            "A RSSI alarm is generated when RSSI becomes lower than
             wmanIf2BsLowRssiThreshold and is cleared when RSSI becomes
             higher than wmanIf2BsLowRssiThreshold."
        ::= { wmanIf2BsSsNotificationObjectsEntry 6 }

wmanIf2BsSsRssiStatusInfo  OBJECT-TYPE
        SYNTAX      OCTET STRING (SIZE(0..255))
        MAX-ACCESS  read-only
        STATUS      current
        DESCRIPTION
            "This object indicates the reason why RSSI alarm is
             generated."
        ::= { wmanIf2BsSsNotificationObjectsEntry 7 }

wmanIf2BsSsRegisterStatus OBJECT-TYPE
        SYNTAX      INTEGER {ssRegister(1),
                             ssDeregister(2)}
        MAX-ACCESS  read-only
```



```
        STATUS      current
        DESCRIPTION
            "This object indicates the status of SS registration."
        ::= { wmanIf2BsSsNotificationObjectsEntry 8 }

wmanIf2BsDynamicServiceFailSfid OBJECT-TYPE
        SYNTAX      Unsigned32 (1..4294967295)
        MAX-ACCESS  read-only
        STATUS      current
        DESCRIPTION
            "This object identifies the dynamic service flow
             for notification purposes."
        ::= { wmanIf2BsSsNotificationObjectsEntry 9 }

wmanIf2BsEventNotificationTime OBJECT-TYPE
        SYNTAX      TimeStamp
        MAX-ACCESS  read-only
        STATUS      current
        DESCRIPTION
            "Indicates the date and time when the event notification
             trap was generated."
        ::= { wmanIf2BsSsNotificationObjectsEntry 10 }

--
-- Subscriber station Notification Trap Definitions
--
wmanIf2BsSsStatusNotificationTrap NOTIFICATION-TYPE
        OBJECTS     {ifIndex,
                     wmanIf2BsSsNotificationMacAddr,
                     wmanIf2BsSsStatusValue,
                     wmanIf2BsSsStatusInfo}
        STATUS      current
        DESCRIPTION
            "This trap reports the status of a SS. Based on this
             notification the NMS will issue an alarm with certain
             severity depending on the status and the reason received."
        ::= { wmanIf2BsTrapPrefix 1 }

wmanIf2BsSsRssiStatusChangeTrap NOTIFICATION-TYPE
        OBJECTS     {ifIndex,
                     wmanIf2BsSsNotificationMacAddr,
                     wmanIf2BsSsRssiStatus,
                     wmanIf2BsSsRssiStatusInfo}
        STATUS      current
        DESCRIPTION
            "An event to report that the uplink RSSI is below
             wmanIf2BsLowRssiThreshold, or above
             wmanIf2BsHighRssiThreshold after restore."
        ::= { wmanIf2BsTrapPrefix 2 }

wmanIf2BsSsPkmFailTrap NOTIFICATION-TYPE
        OBJECTS     {wmanIf2BsSsNotificationMacAddr}
        STATUS      current
        DESCRIPTION
```

```
            "An event to report the failure of a Pkm operation."
        ::= { wmanIf2BsTrapPrefix 3 }

wmanIf2BsSsDynamicServiceFailTrap NOTIFICATION-TYPE
        OBJECTS     {ifIndex,
                     wmanIf2BsSsNotificationMacAddr,
                     wmanIf2BsDynamicServiceType,
                     wmanIf2BsDynamicServiceFailReason,
                     wmanIf2BsDynamicServiceFailSfid}
        STATUS      current
        DESCRIPTION
            "An event reporting failure of DSx operation for a service
             flow identified by wmanIf2BsDynamicServiceFailSfid and
             detected in the Bs side."
        ::= { wmanIf2BsTrapPrefix 4 }

wmanIf2BsSsRegisterTrap NOTIFICATION-TYPE
        OBJECTS     {ifIndex,
                     wmanIf2BsSsNotificationMacAddr,
                     wmanIf2BsSsRegisterStatus}
        STATUS      current
        DESCRIPTION
            "An event to report SS registration status for a given sector
             identified by ifIndex."
        ::= { wmanIf2BsTrapPrefix 5 }

wmanIf2BsStartupMetricsTrap NOTIFICATION-TYPE
        OBJECTS     {ifIndex,
                     wmanIf2BsAuthenAttempt,
                     wmanIf2BsAuthenSuccess,
                     wmanIf2BsAuthenSuccessRate,
                     wmanIf2BsRangingAttempt,
                     wmanIf2BsRangingSuccess,
                     wmanIf2BsRangingSuccessRate}
        STATUS      current
        DESCRIPTION
            "An event to report BS startup metrics for a given sector
             identified by ifIndex."
        ::= { wmanIf2BsTrapPrefix 6 }

wmanIf2BsThroughputMetricsTrap NOTIFICATION-TYPE
        OBJECTS     {ifIndex,
                     wmanIf2BsAvgDlUserThroughput,
                     wmanIf2BsAvgUlUserThroughput,
                     wmanIf2BsAvgDlMacThroughput,
                     wmanIf2BsAvgUlMacThroughput,
                     wmanIf2BsAvgDlPhyThroughput,
                     wmanIf2BsAvgUlPhyThroughput,
                     wmanIf2BsPeakDlUserThroughput,
                     wmanIf2BsPeakUlUserThroughput,
                     wmanIf2BsPeakDlMacThroughput,
                     wmanIf2BsPeakUlMacThroughput,
                     wmanIf2BsPeakDlPhyThroughput,
                     wmanIf2BsPeakUlPhyThroughput,
```



```
                     wmanIf2BsAvgDlCellEdgeThroughput,
                     wmanIf2BsAvgUlCellEdgeThroughput,
                     wmanIf2BsThroughputMeasurements}
        STATUS      current
        DESCRIPTION
            "An event to report BS throughput metrics for a given sector
             identified by ifIndex."
        ::= { wmanIf2BsTrapPrefix 7 }

wmanIf2BsNetworkEntryMetricsTrap NOTIFICATION-TYPE
        OBJECTS     {ifIndex,
                     wmanIf2BsAvgNetworkEntryLatency,
                     wmanIf2BsMaxNetworkEntryLatency,
                     wmanIf2BsAvgNetworkReEntryLatency,
                     wmanIf2BsMaxNetworkReEntryLatency,
                     wmanIf2BsNumOfNetworkEntries,
                     wmanIf2BsNumOfNetworkReEntries}
        STATUS      current
        DESCRIPTION
            "An event to report BS Network Entry metrics for a given
             sector identified by ifIndex."
        ::= { wmanIf2BsTrapPrefix 8 }

wmanIf2BsPacketErrorRateTrap NOTIFICATION-TYPE
        OBJECTS     {ifIndex,
                     wmanIf2BsDlPacketsSent,
                     wmanIf2BsDlPacketsErrored,
                     wmanIf2BsDlPacketErrorRate,
                     wmanIf2BsUlPacketsReceived,
                     wmanIf2BsUlPacketsErrored,
                     wmanIf2BsUlPacketErrorRate}
        STATUS      current
        DESCRIPTION
            "An event to report BS Packet Error Rate metrics for a given
             sector identified by ifIndex."
        ::= { wmanIf2BsTrapPrefix 9 }

wmanIf2BsHandoverMetricsTrap NOTIFICATION-TYPE
        OBJECTS     {ifIndex,
                     wmanIf2BsHandoverAttempt,
                     wmanIf2BsHandoverSuccess,
                     wmanIf2BsHandoverSuccessRate,
                     wmanIf2BsHandoverCancel,
                     wmanIf2BsHandoverReject,
                     wmanIf2BsHandoverCancelRate,
                     wmanIf2BsHandoverRejectRate,
                     wmanIf2BsAvgHandoverTime,
                     wmanIf2BsUnexpectedHandover}
        STATUS      current
        DESCRIPTION
            "An event to report BS Handover Metrics for a given sector
             identified by ifIndex."
        ::= { wmanIf2BsTrapPrefix 10 }
```

```
wmanIf2BsUserMetricsTrap NOTIFICATION-TYPE
        OBJECTS     {ifIndex,
                     wmanIf2BsActiveUsers,
                     wmanIf2BsMaxNormalModeUsers,
                     wmanIf2BsMaxSleepModeUsers,
                     wmanIf2BsMaxIdleModeUsers,
                     wmanIf2BsAvgNormalModeUsers,
                     wmanIf2BsUsersMeasurements}
        STATUS      current
        DESCRIPTION
            "An event to report BS User Metrics for a given sector
             identified by ifIndex."
        ::= { wmanIf2BsTrapPrefix 11 }

wmanIf2BsCidMetricsTrap NOTIFICATION-TYPE
        OBJECTS     {ifIndex,
                     wmanIf2BsBasicAndPrimaryCids,
                     wmanIf2BsMaximumUserCids,
                     wmanIf2BsAvgUserCids,
                     wmanIf2BsUsersCidMeasurements}
        STATUS      current
        DESCRIPTION
            "An event to report BS CID Metrics for a given sector
             identified by ifIndex."
        ::= { wmanIf2BsTrapPrefix 12 }

wmanIf2BsServiceFlowMetricsTrap NOTIFICATION-TYPE
        OBJECTS     {ifIndex,
                     wmanIf2BsDsaReqCount,
                     wmanIf2BsDsaReqSuccess,
                     wmanIf2BsDsaReqSuccessRate,
                     wmanIf2BsDscReqCount,
                     wmanIf2BsDscReqSuccess,
                     wmanIf2BsDscReqSuccessRate,
                     wmanIf2BsDsdReqCount,
                     wmanIf2BsDsdReqSuccess,
                     wmanIf2BsDsdReqSuccessRate,
                     wmanIf2BsMaxActiveServiceFlow,
                     wmanIf2BsAvgActiveServiceFlow,
                     wmanIf2BsMaxProvisionedServiceFlow,
                     wmanIf2BsAvgProvisioneServiceFlow,
                     wmanIf2BsMaxDlServiceFlow,
                     wmanIf2BsMaxUlServiceFlow,
                     wmanIf2BsNumberOfSfidaAllocated,
                     wmanIf2BsServiceFlowMeasurements}
        STATUS      current
        DESCRIPTION
            "An event to report BS service flow metrics for a given
             sector identified by ifIndex."
        ::= { wmanIf2BsTrapPrefix 13 }

wmanIf2BsArqHarqMetricsTrap NOTIFICATION-TYPE
        OBJECTS     {ifIndex,
                     wmanIf2BsDlArqBlocks,
```



```
                     wmanIf2BsDlArqBlockDropped,
                     wmanIf2BsDlArqBlockErrorRate,
                     wmanIf2BsDlArqBlockRetransmissions,
                     wmanIf2BsDlArqBlockEfficiency,
                     wmanIf2BsUlArqBlocks,
                     wmanIf2BsUlArqBlockRetransmissions,
                     wmanIf2BsUlArqBlockEfficiency,
                     wmanIf2BsDlHarqBlocks,
                     wmanIf2BsDlHarqBlockDropped,
                     wmanIf2BsDlHarqBlockErrorRate,
                     wmanIf2BsUlHarqBlocks,
                     wmanIf2BsUlHarqBlockDropped,
                     wmanIf2BsUlHarqBlockErrorRate}
        STATUS      current
        DESCRIPTION
            "An event to report BS ARQ / HARQ Metrics for a given sector
             identified by ifIndex."
        ::= { wmanIf2BsTrapPrefix 14 }

wmanIf2BsMacMetricsTrap NOTIFICATION-TYPE
        OBJECTS     {ifIndex,
                     wmanIf2BsHmacUnauthenticated,
                     wmanIf2BsCmacUnauthenticated,
                     wmanIf2BsShortHmacUnauthenticated}
        STATUS      current
        DESCRIPTION
            "An event to report Message Authentication Code Metrics for
             a given sector identified by ifIndex."
        ::= { wmanIf2BsTrapPrefix 15 }

--
-- wmanIf2BsCm group - containing tables and objects related to
--                     Configuration Management
--
wmanIf2BsRegisteredSsTable OBJECT-TYPE
        SYNTAX      SEQUENCE OF WmanIf2BsRegisteredSsEntry
        MAX-ACCESS  not-accessible
        STATUS      current
        DESCRIPTION
            "This table contains the basic capability information
             of SSs that have been negotiated and agreed between
             BS and SS via REG-REQ and REG-RSP messages. An entry
             in this table indicates the SS has entered and registered
             into the BS."
        REFERENCE
            "Subclause 6.3.2.3.7"
        ::= { wmanIf2BsCm 1 }

wmanIf2BsRegisteredSsEntry OBJECT-TYPE
        SYNTAX      WmanIf2BsRegisteredSsEntry
        MAX-ACCESS  not-accessible
        STATUS      current
        DESCRIPTION
            "This table provides one row for each SS that has been
```



```
             registered in the BS. The primary index is the ifIndex
             with an ifType of ieee80216WMAN, indicating the BS sector
             with which the SS is associated. wmanIf2BsSsUserGroupId,
             indicating the user group for HFDD operation,
             wmanIf2BsSsMacAddress identifies the SS being registered."
        INDEX     { ifIndex,
                    wmanIf2BsSsUserGroupId,
                    wmanIf2BsSsMacAddress }
        ::= { wmanIf2BsRegisteredSsTable 1 }

WmanIf2BsRegisteredSsEntry ::= SEQUENCE {
        wmanIf2BsSsUserGroupId                  WmanIf2HfddUserGroups,
        wmanIf2BsSsMacAddress                   MacAddress,
        wmanIf2BsSsBasicCid                     WmanIf2TcCidType,
        wmanIf2BsSsPrimaryCid                   WmanIf2TcCidType,
        wmanIf2BsSsSecondaryCid                 WmanIf2TcCidType,
        wmanIf2BsSsManagementSupport            Integer32,
        wmanIf2BsSsIpManagementMode             Integer32,
        wmanIf2BsSs2ndMgmtArqEnable             TruthValue,
        wmanIf2BsSs2ndMgmtArqWindowSize         Integer32,
        wmanIf2BsSs2ndMgmtArqDnLinkTxDelay      Integer32,
        wmanIf2BsSs2ndMgmtArqUpLinkTxDelay      Integer32,
        wmanIf2BsSs2ndMgmtArqDnLinkRxDelay      Integer32,
        wmanIf2BsSs2ndMgmtArqUpLinkRxDelay      Integer32,
        wmanIf2BsSs2ndMgmtArqBlockLifetime      Integer32,
        wmanIf2BsSs2ndMgmtArqSyncLossTimeout    Integer32,
        wmanIf2BsSs2ndMgmtArqDeliverInOrder     WmanIf2TcArqDelvInOrder,
        wmanIf2BsSs2ndMgmtArqRxPurgeTimeout     Integer32,
        wmanIf2BsSs2ndMgmtArqBlockSize          Integer32,
        wmanIf2BsSsVendorIdEncoding             OCTET STRING,
        wmanIf2BsSsAasBroadcastPermission       Integer32,
        wmanIf2BsSsMacVersion                   WmanIf2TcMacVersion}

wmanIf2BsSsUserGroupId OBJECT-TYPE
        SYNTAX      WmanIf2HfddUserGroups
        MAX-ACCESS  not-accessible
        STATUS      current
        DESCRIPTION
            "This is the index to two user groups supported by H-FDD
             operation. If there is only one user group for TDD/FDD,
             then this index = 1. "
        ::= { wmanIf2BsRegisteredSsEntry 1 }

wmanIf2BsSsMacAddress OBJECT-TYPE
        SYNTAX      MacAddress
        MAX-ACCESS  not-accessible
        STATUS      current
        DESCRIPTION
            "The MAC address of SS is received from the RNG-REQ
             message. When SS registers, this MAC address is entered
             into the table, and used as the identifier to the SS."
        REFERENCE
            "Subclause 6.3.2.3.5"
        ::= { wmanIf2BsRegisteredSsEntry 2 }
```



```
wmanIf2BsSsBasicCid OBJECT-TYPE
        SYNTAX      WmanIf2TcCidType
        MAX-ACCESS  read-only
        STATUS      current
        DESCRIPTION
            "The value of this object indicates the SS's basic CID
             that was sent in the RNG-RSP message."
        REFERENCE
            "Subclause 6.3.2.3.6"
        ::= { wmanIf2BsRegisteredSsEntry 3 }

wmanIf2BsSsPrimaryCid OBJECT-TYPE
        SYNTAX      WmanIf2TcCidType
        MAX-ACCESS  read-only
        STATUS      current
        DESCRIPTION
            "The value of this object indicates the primary CID of the
             SS received from the RNG-RSP message."
        REFERENCE
            "Subclause 6.3.2.3.6"
        ::= { wmanIf2BsRegisteredSsEntry 4 }

wmanIf2BsSsSecondaryCid OBJECT-TYPE
        SYNTAX      WmanIf2TcCidType
        MAX-ACCESS  read-only
        STATUS      current
        DESCRIPTION
            "The value of this object indicates the secondary
             management CID present in the REG-RSP message. The value
             should be null if the 2nd management connection is not
             available."
        REFERENCE
            "Subclause 6.3.2.3.8"
        ::= { wmanIf2BsRegisteredSsEntry 5 }

wmanIf2BsSsManagementSupport OBJECT-TYPE
        SYNTAX      INTEGER {unmanagedSs(0),
                             managedSs(1)}
        MAX-ACCESS  read-only
        STATUS      current
        DESCRIPTION
            "This object indicates whether or not the SS is managed."
        REFERENCE
            "Subclause 11.7.2"
        ::= { wmanIf2BsRegisteredSsEntry 6 }

wmanIf2BsSsIpManagementMode OBJECT-TYPE
        SYNTAX      INTEGER {unmanaged(0),
                             ipManaged(1)}
        MAX-ACCESS  read-only
        STATUS      current
        DESCRIPTION
            "The IP management mode parameter dictates whether
```

```
             the provider intends to manage the SS on an ongoing
             basis via IP-based mechanisms."
        REFERENCE
            "Subclause 11.7.3"
        ::= { wmanIf2BsRegisteredSsEntry 7 }

wmanIf2BsSs2ndMgmtArqEnable OBJECT-TYPE
        SYNTAX      TruthValue
        MAX-ACCESS  read-only
        STATUS      current
        DESCRIPTION
            "True(1) ARQ enabling is requested for the 2nd
             management channel."
        REFERENCE
            "Subclause 11.13.17.1"
        ::= { wmanIf2BsRegisteredSsEntry 8 }

wmanIf2BsSs2ndMgmtArqWindowSize OBJECT-TYPE
        SYNTAX      Integer32 (1 .. 1024)
        MAX-ACCESS  read-only
        STATUS      current
        DESCRIPTION
            "Indicates the maximum number of unacknowledged
             fragments at any time for 2nd management connection."
        REFERENCE
            "Subclause 11.13.17.2"
        ::= { wmanIf2BsRegisteredSsEntry 9 }

wmanIf2BsSs2ndMgmtArqDnLinkTxDelay OBJECT-TYPE
        SYNTAX      Integer32 (0 .. 65535)
        UNITS       "100 microsecond"
        MAX-ACCESS  read-only
        STATUS      current
        DESCRIPTION
            "The object defines the ARQ transmitter delay for
             downlink transmission."
        REFERENCE
            "Subclause 11.13.17.3"
        ::= { wmanIf2BsRegisteredSsEntry 10 }

wmanIf2BsSs2ndMgmtArqUpLinkTxDelay OBJECT-TYPE
        SYNTAX      Integer32 (0 .. 65535)
        UNITS       "100 microsecond"
        MAX-ACCESS  read-only
        STATUS      current
        DESCRIPTION
            "The object defines the ARQ transmitter delay for
             uplink transmission."
        REFERENCE
            "Subclause 11.13.17.3"
        ::= { wmanIf2BsRegisteredSsEntry 11 }

wmanIf2BsSs2ndMgmtArqDnLinkRxDelay OBJECT-TYPE
        SYNTAX      Integer32 (0 .. 65535)
```



```
        UNITS       "100 microsecond"
        MAX-ACCESS  read-only
        STATUS      current
        DESCRIPTION
            "The object defines the ARQ receiver delay for
             downlink transmission."
        REFERENCE
            "Subclause 11.13.17.3"
        ::= { wmanIf2BsRegisteredSsEntry 12 }

wmanIf2BsSs2ndMgmtArqUpLinkRxDelay OBJECT-TYPE
        SYNTAX      Integer32 (0 .. 65535)
        UNITS       "100 microsecond"
        MAX-ACCESS  read-only
        STATUS      current
        DESCRIPTION
            "The object defines the ARQ receiver delay for
             uplink transmission."
        REFERENCE
            "Subclause 11.13.17.3"
        ::= { wmanIf2BsRegisteredSsEntry 13 }

wmanIf2BsSs2ndMgmtArqBlockLifetime OBJECT-TYPE
        SYNTAX      Integer32 (0 .. 65535)
        UNITS       "100 microsecond"
        MAX-ACCESS  read-only
        STATUS      current
        DESCRIPTION
            "The maximum time interval an ARQ fragment will be
             managed by the transmitter ARQ machine, once
             initial transmission of the fragment has occured.
             If transmission or retransmission of the fragment
             is not acknowledged by the receiver before the
             time limit is reached, the fragment is discarded.
             A value of 0 means Infinite."
        REFERENCE
            "Subclause 11.13.17.4"
        DEFVAL    {0}
        ::= { wmanIf2BsRegisteredSsEntry 14 }

wmanIf2BsSs2ndMgmtArqSyncLossTimeout OBJECT-TYPE
        SYNTAX      Integer32 (0 .. 65535)
        UNITS       "100 microsecond"
        MAX-ACCESS  read-only
        STATUS      current
        DESCRIPTION
            "The maximum interval before declaring a loss
             of synchronization of the sender and receiver
             state machines. A value of 0 means Infinite."
        REFERENCE
            "Subclause 11.13.17.5"
        DEFVAL    {0}
        ::= { wmanIf2BsRegisteredSsEntry 15 }
```

```
wmanIf2BsSs2ndMgmtArqDeliverInOrder  OBJECT-TYPE
        SYNTAX      WmanIf2TcArqDelvInOrder
        MAX-ACCESS  read-only
        STATUS      current
        DESCRIPTION
            "Indicates whether or not data is to be delivered
             by the receiving MAC to its client application
             in the order in which data was handed off to the
             originating MAC."
        REFERENCE
            "Subclause 11.13.17.6"
        ::= { wmanIf2BsRegisteredSsEntry 16 }

wmanIf2BsSs2ndMgmtArqRxPurgeTimeout  OBJECT-TYPE
        SYNTAX      Integer32 (0 .. 65535)
        UNITS       "100 microseconds"
        MAX-ACCESS  read-only
        STATUS      current
        DESCRIPTION
            "Indicates the time interval the ARQ window is advanced
             after a fragment is received. A value of 0 means Infinite."
        REFERENCE
            "Subclause 11.13.17.7"
        DEFVAL    {0}
      ::= { wmanIf2BsRegisteredSsEntry 17 }

wmanIf2BsSs2ndMgmtArqBlockSize OBJECT-TYPE
        SYNTAX      Integer32 (1 .. 2040)
        MAX-ACCESS  read-only
        STATUS      current
        DESCRIPTION
            "This parameter specifies the size of a ARQ block. This
             parameter shall be established by negotiation during the
             connection setup. The requester includes its desired
             setting in the REQ message. The receiver of the REQ
             message shall take the smaller of the value it prefers and
             value in the REQ message. The minimum value is included in
             the RSP message."
        REFERENCE
            "Subclause 11.13.17.8"
        ::= { wmanIf2BsRegisteredSsEntry 18 }

wmanIf2BsSsVendorIdEncoding OBJECT-TYPE
        SYNTAX      OCTET STRING (SIZE(3))
        MAX-ACCESS  read-only
        STATUS      current
        DESCRIPTION
            "The value field contains the vendor identification
             specified by the 3 byte vendor-specific organizationally
             unique identifier of the SS or BS MAC address.A vendor ID
             used in a REG-REQ shall be the Vendor ID of the SS sending
             the request. A vendor ID used in a REG-RSP shall be the
             Vendor ID of the BS sending the response."
        REFERENCE
```



```
            "Subclause 11.1.5"
        ::= { wmanIf2BsRegisteredSsEntry 19 }

wmanIf2BsSsAasBroadcastPermission OBJECT-TYPE
        SYNTAX    INTEGER {contBasedBwReqPermitted(0),
                           contBasedBwReqNotPermitted(1)}
        MAX-ACCESS  read-only
        STATUS      current
        DESCRIPTION
            "This parameter specifies if SS can issue contention-based
             bandwidth request or not."
        REFERENCE
            "Subclause 11.6 Table 584"
        ::= { wmanIf2BsRegisteredSsEntry 20 }

wmanIf2BsSsMacVersion OBJECT-TYPE
        SYNTAX      WmanIf2TcMacVersion
        MAX-ACCESS  read-only
        STATUS      current
        DESCRIPTION
            "This parameter specifies the version of 802.16 to which the
             message originator conforms."
        REFERENCE
            "Subclause 11.1.3"
        ::= { wmanIf2BsRegisteredSsEntry 21 }

--
-- wmanIf2BsConfigurationTable contains global parameters common in BS
--
wmanIf2BsConfigurationTable OBJECT-TYPE
        SYNTAX      SEQUENCE OF WmanIf2BsConfigurationEntry
        MAX-ACCESS  not-accessible
        STATUS      current
        DESCRIPTION
            "This table provides one row for each BS sector that
             contains the BS system parameters as defined in Subclause
             10.1 of [3]. The objects in this table define the default
             behaviour of the BS for 2nd Management connection
             scheduling and SFID allocation as well as configuration
             parameters of the CPS scheduler and AAS system."
        REFERENCE
            "Subclause 10.1, Table 553"
        ::= { wmanIf2BsCm 2 }

wmanIf2BsConfigurationEntry OBJECT-TYPE
        SYNTAX      WmanIf2BsConfigurationEntry
        MAX-ACCESS  not-accessible
        STATUS      current
        DESCRIPTION
            ""
        INDEX     { ifIndex }
        ::= { wmanIf2BsConfigurationTable 1 }

WmanIf2BsConfigurationEntry ::= SEQUENCE {
```

```
        wmanIf2BsDcdInterval                    Integer32,
        wmanIf2BsUcdInterval                    Integer32,
        wmanIf2BsUcdTransition                  Integer32,
        wmanIf2BsDcdTransition                  Integer32,
        wmanIf2BsInitialRangingInterval         Integer32,
        wmanIf2BsInvitedRangingRetries          Integer32,
        wmanIf2BsSsULMapProcTime                Unsigned32,
        wmanIf2BsSsRangRespProcTime             Unsigned32,
        wmanIf2BsDsxRequestRetries              Integer32,
        wmanIf2BsDsxResponseRetries             Integer32,
        wmanIf2BsT7Timeout                      Integer32,
        wmanIf2BsT8Timeout                      Integer32,
        wmanIf2BsT9Timeout                      Integer32,
        wmanIf2BsT10Timeout                     Integer32,
        wmanIf2BsT13Timeout                     Integer32,
        wmanIf2BsT15Timeout                     Integer32,
        wmanIf2BsT17Timeout                     Integer32,
        wmanIf2BsT22Timeout                     Integer32,
        wmanIf2BsT27IdleTimer                   Unsigned32,
        wmanIf2BsT27ActiveTimer                 Unsigned32,
        wmanIf2BsRangingCorrectionRetries       Unsigned32,
        wmanIf2Bs2ndMgmtDlQoSProfileIndex       Integer32,
        wmanIf2Bs2ndMgmtUlQoSProfileIndex       Integer32,
        wmanIf2BsAutoSfidEnabled                Integer32,
        wmanIf2BsAutoSfidRangeMin               Unsigned32,
        wmanIf2BsAutoSfidRangeMax               Unsigned32,
        wmanIf2BsAasChanFbckReqFreq             Integer32,
        wmanIf2BsAasBeamSelectFreq              Integer32,
        wmanIf2BsAasChanFbckReqResolution       Integer32,
        wmanIf2BsAasBeamReqResolution           Integer32,
        wmanIf2BsAasNumOptDiversityZones        Integer32,
        wmanIf2BsResetSector                    Integer32,
        wmanIf2BsSaChallengeTimer               Integer32,
        wmanIf2BsSaChallengeMaxResends          Integer32,
        wmanIf2BsSaTekTimer                     Integer32,
        wmanIf2BsSaTekReqMaxResends             Integer32,
        wmanIf2BsLbsAdvInterval                 Integer32,
        wmanIf2BsSiiAdvInterval                 Integer32,
        wmanIf2BsT49Timeout                     Integer32,
        wmanIf2BsT56Timeout                     Integer32,
        wmanIf2BsT57Timeout                     Integer32,
        wmanIf2BsDlRadioRsrcWindowSize          Integer32,
        wmanIf2BsUlRadioRsrcWindowSize          Integer32}

wmanIf2BsDcdInterval OBJECT-TYPE
        SYNTAX      Integer32 (0..10000)
        UNITS       "milliseconds"
        MAX-ACCESS  read-write
        STATUS      current
        DESCRIPTION
            "Time between transmission of DCD messages in ms."
        ::= { wmanIf2BsConfigurationEntry 1 }

wmanIf2BsUcdInterval OBJECT-TYPE
```



```
        SYNTAX      Integer32 (0..10000)
        UNITS       "milliseconds"
        MAX-ACCESS  read-write
        STATUS      current
        DESCRIPTION
            "Time between transmission of UCD messages in ms."
        ::= { wmanIf2BsConfigurationEntry 2 }

wmanIf2BsUcdTransition OBJECT-TYPE
        SYNTAX      Integer32 (2..65535)
        UNITS       "milliseconds"
        MAX-ACCESS  read-write
        STATUS      current
        DESCRIPTION
            "The time the BS shall wait after repeating a UCD message
             with an incremented Configuration Change Count before
             issuing a UL-MAP message referring to Uplink_Burst_Profiles
             defined in that UCD message.
             Minimum value = 20ms following the last fragment of the
             message"
        ::= { wmanIf2BsConfigurationEntry 3 }

wmanIf2BsDcdTransition OBJECT-TYPE
        SYNTAX      Integer32 (2..65535)
        UNITS       "milliseconds"
        MAX-ACCESS  read-write
        STATUS      current
        DESCRIPTION
            "The time the BS shall wait after repeating a DCD message
             with an incremented Configuration Change Count before
             issuing a DL-MAP message referring to
             Downlink_Burst_Profiles defined in that DCD message.
             Minimum value = 20ms following the last fragment of the
             message"
        ::= { wmanIf2BsConfigurationEntry 4 }

wmanIf2BsInitialRangingInterval OBJECT-TYPE
        SYNTAX      Integer32(0..2000)
        UNITS       "milliseconds"
        MAX-ACCESS  read-write
        STATUS      current
        DESCRIPTION
            "Time between Initial Ranging regions assigned by the BS
             in ms."
        ::= { wmanIf2BsConfigurationEntry 5 }

wmanIf2BsInvitedRangingRetries OBJECT-TYPE
        SYNTAX      Integer32 (16 .. 65535)
        MAX-ACCESS  read-write
        STATUS      current
        DESCRIPTION
            "Number of retries on inviting Ranging Requests"
        ::= { wmanIf2BsConfigurationEntry 6 }
```

```
wmanIf2BsSsULMapProcTime OBJECT-TYPE
        SYNTAX      Unsigned32 (200 .. 4294967295)
        UNITS       "micro seconds"
        MAX-ACCESS  read-write
        STATUS      current
        DESCRIPTION
            "Time provided between arrival of the last bit of a UL-MAP
             at an SS and effectiveness of that map in us. For OFDMA
             mode, the time shall be counted starting from the end of
             the burst carrying the UL-MAP.
             Minimum value: SC = 200us
                            OFDM = 1ms
                            OFDMA = frame duration"
        ::= { wmanIf2BsConfigurationEntry 7 }

wmanIf2BsSsRangRespProcTime OBJECT-TYPE
        SYNTAX      Unsigned32 (10000 .. 4294967295)
        UNITS       "micro seconds"
        MAX-ACCESS  read-write
        STATUS      current
        DESCRIPTION
            "Time allowed for an SS following receipt of a ranging
             response before it is expected to reply to an invited
             ranging request in us."
        ::= { wmanIf2BsConfigurationEntry 8 }

wmanIf2BsDsxRequestRetries OBJECT-TYPE
        SYNTAX      Integer32 (0 .. 65535)
        MAX-ACCESS  read-write
        STATUS      current
        DESCRIPTION
            "Number of Timeout Retries on DSA/DSC/DSD Requests"
        DEFVAL      { 3 }
        ::= { wmanIf2BsConfigurationEntry 9 }

wmanIf2BsDsxResponseRetries OBJECT-TYPE
        SYNTAX      Integer32 (0 .. 65535)
        MAX-ACCESS  read-write
        STATUS      current
        DESCRIPTION
            "Number of Timeout Retries on DSA/DSC/DSD Requests"
        DEFVAL      { 3 }
        ::= { wmanIf2BsConfigurationEntry 10 }

wmanIf2BsT7Timeout OBJECT-TYPE
        SYNTAX      Integer32 (0 .. 1000)
        UNITS       "milliseconds"
        MAX-ACCESS  read-write
        STATUS      current
        DESCRIPTION
            "Wait for DSA/DSC/DSD Response timeout"
        ::= { wmanIf2BsConfigurationEntry 11 }

wmanIf2BsT8Timeout OBJECT-TYPE
```



```
        SYNTAX      Integer32 (0 .. 300)
        UNITS       "milliseconds"
        MAX-ACCESS  read-write
        STATUS      current
        DESCRIPTION
            "Wait for DSA/DSC/DSD Response timeout"
        ::= { wmanIf2BsConfigurationEntry 12 }

wmanIf2BsT9Timeout OBJECT-TYPE
        SYNTAX      Integer32 (300 .. 65535)
        UNITS       "milliseconds"
        MAX-ACCESS  read-write
        STATUS      current
        DESCRIPTION
            "Registration Timeout, the time allowed between the BS
             sending a RNG-RSP (success) to an SS, and receiving a
             SBC-REQ from that same SS in ms."
        ::= { wmanIf2BsConfigurationEntry 13 }

wmanIf2BsT10Timeout OBJECT-TYPE
        SYNTAX      Integer32 (0 .. 3000)
        UNITS       "milliseconds"
        MAX-ACCESS  read-write
        STATUS      current
        DESCRIPTION
            "Wait for Transaction End timeout."
        ::= { wmanIf2BsConfigurationEntry 14 }

wmanIf2BsT13Timeout OBJECT-TYPE
        SYNTAX      Integer32 (15 .. 65535)
        UNITS       "minutes"
        MAX-ACCESS  read-write
        STATUS      current
        DESCRIPTION
            "The time allowed for an SS, following receipt of a
             REG-RSP message to send a TFTP-CPLT message to the BS
             in min."
        DEFVAL      { 15 }
        ::= { wmanIf2BsConfigurationEntry 15 }

wmanIf2BsT15Timeout OBJECT-TYPE
        SYNTAX      Integer32 (20 .. 65535)
        UNITS       "milliseconds"
        MAX-ACCESS  read-write
        STATUS      current
        DESCRIPTION
            "Wait for MCA-RSP in ms."
        DEFVAL      { 20 }
        ::= { wmanIf2BsConfigurationEntry 16 }

wmanIf2BsT17Timeout OBJECT-TYPE
        SYNTAX      Integer32 (5 .. 65535)
        UNITS       "minutes"
        MAX-ACCESS  read-write
```

```
        STATUS      current
        DESCRIPTION
            "Time allowed for SS to complete SS Authorization and
             Key Exchange in minutes."
        DEFVAL      { 5 }
        ::= { wmanIf2BsConfigurationEntry 17 }

wmanIf2BsT22Timeout OBJECT-TYPE
        SYNTAX      Integer32 (1 .. 500)
        UNITS       "milliseconds"
        MAX-ACCESS  read-write
        STATUS      current
        DESCRIPTION
            "Wait for ARQ-Reset."
        ::= { wmanIf2BsConfigurationEntry 18 }

wmanIf2BsT27IdleTimer OBJECT-TYPE
        SYNTAX      Unsigned32 (10000 .. 4294967295)
        UNITS       "microsecond"
        MAX-ACCESS  read-write
        STATUS      current
        DESCRIPTION
            "Maximum time between unicast grants to SS when BS believes
             SS uplink transmission quality is good enough."
        ::= { wmanIf2BsConfigurationEntry 19 }

wmanIf2BsT27ActiveTimer OBJECT-TYPE
        SYNTAX      Unsigned32 (10000 .. 4294967295)
        UNITS       "microsecond"
        MAX-ACCESS  read-write
        STATUS      current
        DESCRIPTION
            "Maximum time between unicast grants to SS when BS believes
             SS uplink transmission quality is not good enough."
        ::= { wmanIf2BsConfigurationEntry 20 }

wmanIf2BsRangingCorrectionRetries OBJECT-TYPE
        SYNTAX      Unsigned32 (1 .. 255)
        UNITS       "microsecond"
        MAX-ACCESS  read-write
        STATUS      current
        DESCRIPTION
            "Maximum time between unicast grants to SS when BS believes
             SS uplink transmission quality is not good enough."
        DEFVAL      { 16 }
        ::= { wmanIf2BsConfigurationEntry 21 }

wmanIf2Bs2ndMgmtDlQoSProfileIndex OBJECT-TYPE
        SYNTAX      Integer32 (1..65535)
        MAX-ACCESS  read-write
        STATUS      current
        DESCRIPTION
            "This object defines the index of a row in
             wmanIf2BsServiceClassTable which is used to obtain all QoS
```



```
             parameters required for the BS downlink scheduler to
             properly allocate and manage the bandwidth and schedule
             the 2nd Management Connection traffic. The 2nd Management
             Connection traffic doesn't differ from Traffic Connection
             traffic in the area of QoS management."
        ::= { wmanIf2BsConfigurationEntry 22 }

wmanIf2Bs2ndMgmtUlQoSProfileIndex OBJECT-TYPE
        SYNTAX      Integer32 (1..65535)
        MAX-ACCESS  read-write
        STATUS      current
        DESCRIPTION
            "This object defines the index of a row in
             wmanIf2BsServiceClassTable which is used to obtain all QoS
             parameters required for the BS uplink scheduler to
             properly allocate and manage the bandwidth and schedule
             the 2nd Management Connection traffic. The 2nd Management
             Connection traffic doesn't differ from Traffic Connection
             traffic in the area of QoS management."
        ::= { wmanIf2BsConfigurationEntry 23 }

wmanIf2BsAutoSfidEnabled OBJECT-TYPE
        SYNTAX      INTEGER {autoSfidDisabled(0),
                             autoSfidEnabled(1)}
        MAX-ACCESS  read-write
        STATUS      current
        DESCRIPTION
            "This object defines whether the BS is allowed to
             autonomously allocate SFIDs. When the object is set to
             autoSfidEnabled, the BS is allowed to autonomously allocate
             SFIDs from the range of allowed values defined by
             wmanIf2BsConfigExtAutoSfidRangeMin and
             wmanIf2BsConfigExtAutoSfidRangeMax. A SF is created
             autonomously when it has not been provisioned in the
             wmanIf2BsProvisionedSfTable and may be initiated by either
             the SS or BS. The BS should always initiate SF creation
             based on the provisioned Service flows configured in
             wmanIf2BsProvisionedSfTable."
        REFERENCE
            "Subclause 11.13.1"
        ::= { wmanIf2BsConfigurationEntry 24 }

wmanIf2BsAutoSfidRangeMin OBJECT-TYPE
        SYNTAX      Unsigned32 ( 1 .. 4294967295)
        MAX-ACCESS  read-write
        STATUS      current
        DESCRIPTION
            "This object defines the minimum value of the range of SFID
             values allocated for the BS sector for the purpose of
             autonomous creation of service flows. This value is used
             when the object wmanIf2BsAutoSfidEnabled allows
             autonomous creation of SFIDs."
        REFERENCE
            "Subclause 11.13.1"
```

```
        ::= { wmanIf2BsConfigurationEntry 25 }

wmanIf2BsAutoSfidRangeMax OBJECT-TYPE
        SYNTAX      Unsigned32 ( 1 .. 4294967295)
        MAX-ACCESS  read-write
        STATUS      current
        DESCRIPTION
            "This object defines the maximum value of the range of SFID
             values allocated for the BS sector for the purpose of
             autonomous creation of the service flows. This value is
             used when the object wmanIf2BsAutoSfidEnabled allows
             autonomous creation of SFIDs."
        REFERENCE
            "Subclause 11.13.1"
        ::= { wmanIf2BsConfigurationEntry 26 }

wmanIf2BsAasChanFbckReqFreq OBJECT-TYPE
        SYNTAX      Integer32 (5..10000)
        UNITS       "millisecond"
        MAX-ACCESS  read-write
        STATUS      current
        DESCRIPTION
            "This object defines AAS channel feedback request frequency.
             It controls the frequency of downlink beam measurements.
             The relevant MAC messages are AAS-FBCK-REQ/RSP"
        REFERENCE
            "Subclause 6.3.2.3.35"
        ::= { wmanIf2BsConfigurationEntry 27 }

wmanIf2BsAasBeamSelectFreq OBJECT-TYPE
        SYNTAX      Integer32 (5..10000)
        UNITS       "millisecond"
        MAX-ACCESS  read-write
        STATUS      current
        DESCRIPTION
            "This object defines AAS beam select frequency.
             It controls how often SS issues beam select messages.
             The relevant MAC message is AAS_Beam_Select"
        REFERENCE
            "Subclause 6.3.2.3.36"
        ::= { wmanIf2BsConfigurationEntry 28 }

wmanIf2BsAasChanFbckReqResolution OBJECT-TYPE
        SYNTAX      INTEGER {aasChanFbckRes00(0),
                             aasChanFbckRes01(1),
                             aasChanFbckRes10(2),
                             aasChanFbckRes11(3)}
        MAX-ACCESS  read-write
        STATUS      current
        DESCRIPTION
            "This object defines AAS feedback request frequency
             measurements resolution. It is coded as follows:
             aasChanFbckRes00 - every 4th carrier
                                (-100, -96, -92, .., 100)
```



```
             aasChanFbckRes01 - every 8th carrier
                                (-100, -92, -84, .., 100)
             aasChanFbckRes10 - every 16th carrier
                                (-100, -84, -68, .., 100)
             aasChanFbckRes11 - every 32th carrier
                                (-100, -68, -36, .., 100)"
        REFERENCE
            "Subclause 8.3.6.4"
        ::= { wmanIf2BsConfigurationEntry 29 }

wmanIf2BsAasBeamReqResolution OBJECT-TYPE
        SYNTAX      INTEGER {aasBeamReqRes000(0),
                             aasBeamReqRes001(1),
                             aasBeamReqRes010(2),
                             aasBeamReqRes011(3),
                             aasBeamReqRes100(4)}
        MAX-ACCESS  read-write
        STATUS      current
        DESCRIPTION
            "This object defines AAS beam select request resolution
             parameter. It is coded as follows:
             aasBeamReqRes000 - every 4th carrier
             aasBeamReqRes001 - every 8th carrier
             aasBeamReqRes010 - every 16th carrier
             aasBeamReqRes011 - every 32th carrier
             aasBeamReqRes100 - every 64th carrier"
        REFERENCE
            "Subclause 8.3.6.5"
        ::= { wmanIf2BsConfigurationEntry 30 }

wmanIf2BsAasNumOptDiversityZones OBJECT-TYPE
        SYNTAX      Integer32 (0..65535)
        MAX-ACCESS  read-write
        STATUS      current
        DESCRIPTION
            "This object defines the number of optional diversity zones
             transmitted in downlink."
        REFERENCE
            "Figure 211"
        ::= { wmanIf2BsConfigurationEntry 31 }

wmanIf2BsResetSector OBJECT-TYPE
        SYNTAX      INTEGER {noAction(0),
                             sectorReset(1)}
        MAX-ACCESS  read-write
        STATUS      current
        DESCRIPTION
            "This object should be implemented as follows:
             - When set to actionsResetSector value, instructs BS to
               reset the sector identified by ifIndex. As a result of
               this action the PHY and MAC of this sector should be
               reinitialised.
             - When set to value different than actionsResetSector it
               should be ignored
```

```
             - When read it should return actionsResetSectorNoAction"
        ::= { wmanIf2BsConfigurationEntry 32 }

wmanIf2BsSaChallengeTimer OBJECT-TYPE
        SYNTAX      Integer32 (500 .. 2000)
        UNITS       "milliseconds"
        MAX-ACCESS  read-write
        STATUS      current
        DESCRIPTION
            "Time prior to re-send of SATEK-Challenge."
        DEFVAL      { 1000 }
        ::= { wmanIf2BsConfigurationEntry 33 }

wmanIf2BsSaChallengeMaxResends OBJECT-TYPE
        SYNTAX      Integer32 (1 .. 3)
        MAX-ACCESS  read-write
        STATUS      current
        DESCRIPTION
            "Maximum number of transmissions of SA-TEK-Challenge."
        DEFVAL      { 3 }
        ::= { wmanIf2BsConfigurationEntry 34 }

wmanIf2BsSaTekTimer OBJECT-TYPE
        SYNTAX      Integer32 (100 .. 1000)
        UNITS       "milliseconds"
        MAX-ACCESS  read-write
        STATUS      current
        DESCRIPTION
            "Time prior to re-send of SATEK-Request."
        DEFVAL      { 300 }
        ::= { wmanIf2BsConfigurationEntry 35 }

wmanIf2BsSaTekReqMaxResends OBJECT-TYPE
        SYNTAX      Integer32 (1 .. 3)
        MAX-ACCESS  read-write
        STATUS      current
        DESCRIPTION
            "Maximum number of transmissions of SA-TEK-Request."
        DEFVAL      { 3 }
        ::= { wmanIf2BsConfigurationEntry 36 }

wmanIf2BsLbsAdvInterval OBJECT-TYPE
        SYNTAX      Integer32 (2 .. 1800)
        UNITS       "seconds"
        MAX-ACCESS  read-write
        STATUS      current
        DESCRIPTION
            "Nominal time between transmission of LBS-ADV messages."
        DEFVAL      { 10 }
        ::= { wmanIf2BsConfigurationEntry 37 }

wmanIf2BsSiiAdvInterval OBJECT-TYPE
        SYNTAX      Integer32 (1 .. 30)
        UNITS       "seconds"
```



```
        MAX-ACCESS  read-write
        STATUS      current
        DESCRIPTION
            "Nominal time between transmission of SII-ADV messages."
        DEFVAL      { 10 }
        ::= { wmanIf2BsConfigurationEntry 38 }

wmanIf2BsT49Timeout OBJECT-TYPE
        SYNTAX      Integer32 (5 .. 50)
        UNITS       "seconds"
        MAX-ACCESS  read-write
        STATUS      current
        DESCRIPTION
            "Maximum duration that BS shall wait to receive RNG-REQ
             messages from MS on Ul transmission opportunities after
             keep-alive check operation starts in the frame specified by
             Next Periodic Ranging TLV encoding (refer to 6.3.20.7.1)"
        ::= { wmanIf2BsConfigurationEntry 39 }

wmanIf2BsT56Timeout OBJECT-TYPE
        SYNTAX      Integer32 (5 .. 50)
        UNITS       "seconds"
        MAX-ACCESS  read-write
        STATUS      current
        DESCRIPTION
            "The time allowed between the SBC response and PKM-REQ."
        ::= { wmanIf2BsConfigurationEntry 40 }

wmanIf2BsT57Timeout OBJECT-TYPE
        SYNTAX      Integer32 (5 .. 50)
        UNITS       "seconds"
        MAX-ACCESS  read-write
        STATUS      current
        DESCRIPTION
            "The time allowed between the PKM-REQ (Code=31) and PKM-REQ
             for security procedure initiation."
        ::= { wmanIf2BsConfigurationEntry 41 }

wmanIf2BsDlRadioRsrcWindowSize OBJECT-TYPE
        SYNTAX      Integer32 (1 .. 65535)
        UNITS       "frames"
        MAX-ACCESS  read-write
        STATUS      current
        DESCRIPTION
            "The number of frames over which the Available UL Radio
             Resources are calculated."
        DEFVAL      { 200 }
        ::= { wmanIf2BsConfigurationEntry 42 }

wmanIf2BsUlRadioRsrcWindowSize OBJECT-TYPE
        SYNTAX      Integer32 (1 .. 65535)
        UNITS       "frames"
        MAX-ACCESS  read-write
        STATUS      current
```

```
        DESCRIPTION
            "The number of frames over which the Available DL Radio
             Resources are calculated."
        DEFVAL      { 200 }
        ::= { wmanIf2BsConfigurationEntry 43 }

wmanIf2BsSsReqCapabilitiesTable OBJECT-TYPE
        SYNTAX      SEQUENCE OF WmanIf2BsSsReqCapabilitiesEntry
        MAX-ACCESS  not-accessible
        STATUS      current
        DESCRIPTION
            "This table contains the basic capability information of SSs
             that have been reported by SSs to BS using RNG-REQ, SBC-REQ
             and REG-REQ messages. Entries in this table should be
             created when an SS registers with a BS."
        REFERENCE
            "Subclause 6.3.2.3.7"
        ::= { wmanIf2BsCm 3 }

wmanIf2BsSsReqCapabilitiesEntry OBJECT-TYPE
        SYNTAX      WmanIf2BsSsReqCapabilitiesEntry
        MAX-ACCESS  not-accessible
        STATUS      current
        DESCRIPTION
            "This table provides one row for each SS that has been
             registered in the BS. This table augments the table
             wmanIf2BsRegisteredSsTable."
        AUGMENTS { wmanIf2BsRegisteredSsEntry }
        ::= { wmanIf2BsSsReqCapabilitiesTable 1 }

WmanIf2BsSsReqCapabilitiesEntry ::= SEQUENCE {
        wmanIf2BsSsReqCapUplinkCidSupport       WmanIf2NumOfCid,
        wmanIf2BsSsReqCapDsxFlowControl         WmanIf2MaxDsxFlowType,
        wmanIf2BsSsReqCapMcaFlowControl         WmanIf2MaxMcaFlowType,
        wmanIf2BsSsReqCapMcpGroupCidSupport     WmanIf2MaxMcpGroupCid,
        wmanIf2BsSsReqCapPkmFlowControl         WmanIf2MaxPkmFlowType,
        wmanIf2BsSsReqCapMaxNumOfSupportedSA    WmanIf2MaxNumOfSaType,
        wmanIf2BsSsReqCapMaxNumOfClassifier     WmanIf2MaxClassifiers,
        wmanIf2BsSsReqCapTtgTransitionGap       WmanIf2SsTransitionGap,
        wmanIf2BsSsReqCapRtgTransitionGap       WmanIf2SsTransitionGap,
        wmanIf2BsSsReqCapDownlinkCidSupport     WmanIf2NumOfCid,
        wmanIf2BsSsReqCapMaxNumBurstToMs        WmanIf2MaxNumBurstTx,
        wmanIf2BsSsReqCapMaxMacLevelDlFrame     WmanIf2MaxMacLevel,
        wmanIf2BsSsReqCapMaxMacLevelUlFrame     WmanIf2MaxMacLevel,
        wmanIf2BsSsReqCapPnWindowSize           Integer32,
        wmanIf2BsSsReqCapOfdmLoopPwrControlSw   WmanIf2MinNumFrmPwrCtrl,
        wmanIf2BsSsReqCapOfdmaSdmaPilot         WmanIf2SdmaPilotCap,
        wmanIf2BsSsReqCapOfdmaNoUlHarqChannel   WmanIf2OfdmaNoHarqChan,
        wmanIf2BsSsReqCapOfdmaNoDlHarqChannel   WmanIf2OfdmaNoHarqChan,
        wmanIf2BsSsReqCapOptionsBasic           WmanIf2BasicCapOptions,
        wmanIf2BsSsReqCapOptionsBasic2          WmanIf2BasicCapOptions2,
        wmanIf2BsSsReqCapOptionsOfdm            WmanIf2OfdmCapOptions,
        wmanIf2BsSsReqCapOptionsOfdma           WmanIf2OfdmaCapOptions,
        wmanIf2BsSsReqCapOptionsOfdma2          WmanIf2OfdmaCapOptions2,
```



```
        wmanIf2BsSsReqCapCurrentTxPower         WmanIf2CurrentTxPower,
        wmanIf2BsSsReqMaxTxPowerBpsk            WmanIf2MaxTxPowerType,
        wmanIf2BsSsReqMaxTxPowerQpsk            WmanIf2MaxTxPowerType,
        wmanIf2BsSsReqMaxTxPower16Qam           WmanIf2MaxTxPowerType,
        wmanIf2BsSsReqMaxTxPower64Qam           WmanIf2MaxTxPowerType}

wmanIf2BsSsReqCapUplinkCidSupport OBJECT-TYPE
        SYNTAX      WmanIf2NumOfCid
        MAX-ACCESS  read-only
        STATUS      current
        DESCRIPTION
           "This object shows the number of Uplink transport CIDs the SS
            can support."
        ::= { wmanIf2BsSsReqCapabilitiesEntry 1 }

wmanIf2BsSsReqCapDsxFlowControl OBJECT-TYPE
        SYNTAX      WmanIf2MaxDsxFlowType
        MAX-ACCESS  read-only
        STATUS      current
        DESCRIPTION
            "This object specifies the maximum number of concurrent
             DSA, DSC, or DSD transactions that SS is capable of having
             outstanding."
        DEFVAL    { 0 }
        ::= { wmanIf2BsSsReqCapabilitiesEntry 2 }

wmanIf2BsSsReqCapMcaFlowControl OBJECT-TYPE
        SYNTAX      WmanIf2MaxMcaFlowType
        MAX-ACCESS  read-only
        STATUS      current
        DESCRIPTION
            "This object specifies the maximum number of concurrent MCA
             transactions that SS is capable of having outstanding."
        DEFVAL    { 0 }
        ::= { wmanIf2BsSsReqCapabilitiesEntry 3 }

wmanIf2BsSsReqCapMcpGroupCidSupport OBJECT-TYPE
        SYNTAX      WmanIf2MaxMcpGroupCid
        MAX-ACCESS  read-only
        STATUS      current
        DESCRIPTION
            "This object indicates the maximum number of
             simultaneous Multicast Polling Groups the SS is
             capable of belonging to."
        DEFVAL    { 0 }
        ::= { wmanIf2BsSsReqCapabilitiesEntry 4 }

wmanIf2BsSsReqCapPkmFlowControl OBJECT-TYPE
        SYNTAX      WmanIf2MaxPkmFlowType
        MAX-ACCESS  read-only
        STATUS      current
        DESCRIPTION
            "This object specifies the maximum number of concurrent PKM
             transactions that SS is capable of having outstanding."
```

```
        DEFVAL    { 0 }
        ::= { wmanIf2BsSsReqCapabilitiesEntry 5 }

wmanIf2BsSsReqCapMaxNumOfSupportedSA OBJECT-TYPE
        SYNTAX      WmanIf2MaxNumOfSaType
        MAX-ACCESS  read-only
        STATUS      current
        DESCRIPTION
            "This field specifies the maximum number of supported
             security associations of the SS."
        DEFVAL    { 1 }
        ::= { wmanIf2BsSsReqCapabilitiesEntry 6 }

wmanIf2BsSsReqCapMaxNumOfClassifier OBJECT-TYPE
        SYNTAX      WmanIf2MaxClassifiers
        MAX-ACCESS  read-only
        STATUS      current
        DESCRIPTION
            "This object indicates the maximum number of admitted
             Classifiers that the SS can support."
        DEFVAL      { 0 }
        ::= { wmanIf2BsSsReqCapabilitiesEntry 7 }

wmanIf2BsSsReqCapTtgTransitionGap OBJECT-TYPE
        SYNTAX      WmanIf2SsTransitionGap
        UNITS       "microsecond"
        MAX-ACCESS  read-only
        STATUS      current
        DESCRIPTION
            "This field indicates the SS's transition speed SSTTG
             for TDD and H-FDD SSs."
        ::= { wmanIf2BsSsReqCapabilitiesEntry 8 }

wmanIf2BsSsReqCapRtgTransitionGap OBJECT-TYPE
        SYNTAX      WmanIf2SsTransitionGap
        UNITS       "microsecond"
        MAX-ACCESS  read-only
        STATUS      current
        DESCRIPTION
            "This field indicates the SS's transition speed SSRTG
             for TDD and H-FDD SSs."
        ::= { wmanIf2BsSsReqCapabilitiesEntry 9 }

wmanIf2BsSsReqCapDownlinkCidSupport OBJECT-TYPE
        SYNTAX      WmanIf2NumOfCid
        MAX-ACCESS  read-only
        STATUS      current
        DESCRIPTION
           "This object shows the number of Downlink transport CIDs the
            SS can support."
        ::= { wmanIf2BsSsReqCapabilitiesEntry 10 }

wmanIf2BsSsReqCapMaxNumBurstToMs OBJECT-TYPE
        SYNTAX      WmanIf2MaxNumBurstTx
```



```
        MAX-ACCESS  read-only
        STATUS      current
        DESCRIPTION
            "Maximum number of bursts transmitted concurrently to the MS
            , including all bursts without CID or with CIDs matching
             the MS's CIDs."
        ::= { wmanIf2BsSsReqCapabilitiesEntry 11 }

wmanIf2BsSsReqCapMaxMacLevelDlFrame OBJECT-TYPE
        SYNTAX      WmanIf2MaxMacLevel
        UNITS       "256Bytes"
        MAX-ACCESS  read-only
        STATUS      current
        DESCRIPTION
           "Maximum amount of MAC level data the MS is capable of
            processing per DL frame."
        DEFVAL      { 0 }
        ::= { wmanIf2BsSsReqCapabilitiesEntry 12 }

wmanIf2BsSsReqCapMaxMacLevelUlFrame OBJECT-TYPE
        SYNTAX      WmanIf2MaxMacLevel
        UNITS       "256Bytes"
        MAX-ACCESS  read-only
        STATUS      current
        DESCRIPTION
           "Maximum amount of MAC level data the MS is capable of
            processing per UL frame."
        DEFVAL      { 0 }
       ::= { wmanIf2BsSsReqCapabilitiesEntry 13 }

wmanIf2BsSsReqCapPnWindowSize OBJECT-TYPE
        SYNTAX      Integer32 (0 .. 65535)
        MAX-ACCESS  read-only
        STATUS      current
        DESCRIPTION
           "Specifies the size capability of the receiver PN window for
            SAs and management connections. The receiver shall track
            PNs within this window to prevent replay attacks (see
            7.5.1.2.4)."
        REFERENCE
            "Subclause 11.8.4.4"
        ::= { wmanIf2BsSsReqCapabilitiesEntry 14 }

wmanIf2BsSsReqCapOfdmLoopPwrControlSw OBJECT-TYPE
        SYNTAX      WmanIf2MinNumFrmPwrCtrl
        MAX-ACCESS  read-only
        STATUS      current
        DESCRIPTION
            "This field indicates he minimum number of frames that SS
             takes to switch from the open loop power control scheme to
             the closed loop power control scheme or vice versa."
        ::= { wmanIf2BsSsReqCapabilitiesEntry 15 }

wmanIf2BsSsReqCapOfdmaSdmaPilot OBJECT-TYPE
```

```
        SYNTAX      WmanIf2SdmaPilotCap
        MAX-ACCESS  read-only
        STATUS      current
        DESCRIPTION
            "This field indicates the SDMA pilot pattern support for AMC
             zone."
        ::= { wmanIf2BsSsReqCapabilitiesEntry 16 }

wmanIf2BsSsReqCapOfdmaNoUlHarqChannel OBJECT-TYPE
        SYNTAX      WmanIf2OfdmaNoHarqChan
        MAX-ACCESS  read-only
        STATUS      current
        DESCRIPTION
            "This field specifies the number of uplink H-ARQ channels
            (n) the SS supports, where n = 1..16. The value of this
            object should be 0..15."
        ::= { wmanIf2BsSsReqCapabilitiesEntry 17 }

wmanIf2BsSsReqCapOfdmaNoDlHarqChannel OBJECT-TYPE
        SYNTAX      WmanIf2OfdmaNoHarqChan
        MAX-ACCESS  read-only
        STATUS      current
        DESCRIPTION
            "This field specifies the number of downlink H-ARQ channels
            (n) the SS supports, where n = 1..16. The value of this
            object should be 0..15."
        ::= { wmanIf2BsSsReqCapabilitiesEntry 18 }

wmanIf2BsSsReqCapOptionsBasic OBJECT-TYPE
        SYNTAX      WmanIf2BasicCapOptions
        MAX-ACCESS  read-only
        STATUS      current
        DESCRIPTION
            "Combined BITS encoded general capability options as
             reported by SS."
        ::= { wmanIf2BsSsReqCapabilitiesEntry 19 }

wmanIf2BsSsReqCapOptionsBasic2 OBJECT-TYPE
        SYNTAX      WmanIf2BasicCapOptions2
        MAX-ACCESS  read-only
        STATUS      current
        DESCRIPTION
            "Combined BITS encoded general capability options as
             reported by SS."
        ::= { wmanIf2BsSsReqCapabilitiesEntry 20 }

wmanIf2BsSsReqCapOptionsOfdm OBJECT-TYPE
        SYNTAX      WmanIf2OfdmCapOptions
        MAX-ACCESS  read-only
        STATUS      current
        DESCRIPTION
            "Combined BITS encoded OFDM specific capability options as
             reported by SS."
        ::= { wmanIf2BsSsReqCapabilitiesEntry 21 }
```



```
wmanIf2BsSsReqCapOptionsOfdma OBJECT-TYPE
        SYNTAX      WmanIf2OfdmaCapOptions
        MAX-ACCESS  read-only
        STATUS      current
        DESCRIPTION
            "Combined BITS encoded OFDMA specific capability options as
             reported by SS."
        ::= { wmanIf2BsSsReqCapabilitiesEntry 22 }

wmanIf2BsSsReqCapOptionsOfdma2 OBJECT-TYPE
        SYNTAX      WmanIf2OfdmaCapOptions2
        MAX-ACCESS  read-only
        STATUS      current
        DESCRIPTION
            "Combined BITS encoded OFDMA specific capability options as
             reported by SS."
        ::= { wmanIf2BsSsReqCapabilitiesEntry 23 }

wmanIf2BsSsReqCapCurrentTxPower OBJECT-TYPE
        SYNTAX      WmanIf2CurrentTxPower
        UNITS       "0.5 dBm"
        MAX-ACCESS  read-only
        STATUS      current
        DESCRIPTION
            "This parameter indicates the transmitted power used for
             the burst which carried the message."
        ::= { wmanIf2BsSsReqCapabilitiesEntry 24 }

wmanIf2BsSsReqMaxTxPowerBpsk OBJECT-TYPE
        SYNTAX      WmanIf2MaxTxPowerType
        UNITS       "0.5 dBm"
        MAX-ACCESS  read-only
        STATUS      current
        DESCRIPTION
            "The maximum available power for BPSK. The maximum power
             parameters are reported in dBm and quantized in 0.5 dBm
             steps ranging from -64 dBm (encoded 0x00) to 63.5 dBm
             (encoded 0xFF). Values outside this range shall be assigned
             the closest extreme. This parameter is only applicable to
             systems supporting the OFDM or OFDMA PHY."
        ::= { wmanIf2BsSsReqCapabilitiesEntry 25 }

wmanIf2BsSsReqMaxTxPowerQpsk OBJECT-TYPE
        SYNTAX      WmanIf2MaxTxPowerType
        UNITS       "0.5 dBm"
        MAX-ACCESS  read-only
        STATUS      current
        DESCRIPTION
            "The maximum available power for QPSK. The maximum power
             parameters are reported in dBm and quantized in 0.5 dBm
             steps ranging from -64 dBm (encoded 0x00) to 63.5 dBm
             (encoded 0xFF). Values outside this range shall be assigned
             to closest extreme. This parameter is only applicable to
```

```
             systems supporting the OFDM or OFDMA PHY."
        ::= { wmanIf2BsSsReqCapabilitiesEntry 26 }

wmanIf2BsSsReqMaxTxPower16Qam OBJECT-TYPE
        SYNTAX      WmanIf2MaxTxPowerType
        UNITS       "0.5 dBm"
        MAX-ACCESS  read-only
        STATUS      current
        DESCRIPTION
            "The maximum available power for 16-QAM constellations.
             The maximum power parameters are reported in dBm and
             quantized in 0.5 dBm steps ranging from -64 dBm (encoded
             0x00) to 63.5 dBm (encoded 0xFF). Values outside this
             range shall be assigned the closest extreme. This parameter
             is only applicable to systems supporting the OFDM or
             OFDMA PHY."
        ::= { wmanIf2BsSsReqCapabilitiesEntry 27 }

wmanIf2BsSsReqMaxTxPower64Qam OBJECT-TYPE
        SYNTAX      WmanIf2MaxTxPowerType
        UNITS       "0.5 dBm"
        MAX-ACCESS  read-only
        STATUS      current
        DESCRIPTION
            "The maximum available power for 64-QAM constellations.
             The maximum power parameters are reported in dBm and
             quantized in 0.5 dBm steps ranging from -64 dBm (encoded
             0x00) to 63.5 dBm (encoded 0xFF). Values outside this
             range shall be assigned the closest extreme. SSs that do
             not support QAM64 shall report the value of 0x00. This
             parameter is only applicable to systems supporting the OFDM
             or OFDMA PHY."
        ::= { wmanIf2BsSsReqCapabilitiesEntry 28 }

wmanIf2BsSsRspCapabilitiesTable OBJECT-TYPE
        SYNTAX      SEQUENCE OF WmanIf2BsSsRspCapabilitiesEntry
        MAX-ACCESS  not-accessible
        STATUS      current
        DESCRIPTION
            "This table contains the basic capability information of SSs
             that have been negotiated and agreed between BS and SS via
             RNG-REQ/RSP, SBC-REQ/RSP and REG-REQ/RSP messages.
             This table augments the wmanIf2BsRegisteredSsTable."
        REFERENCE
            "Subclause 6.3.2.3.7"
        ::= { wmanIf2BsCm 4 }

wmanIf2BsSsRspCapabilitiesEntry OBJECT-TYPE
        SYNTAX      WmanIf2BsSsRspCapabilitiesEntry
        MAX-ACCESS  not-accessible
        STATUS      current
        DESCRIPTION
            "This table provides one row for each SS that has been
             registered in the BS. This table augments the
```



```
            wmanIf2BsRegisteredSsTable. "
        AUGMENTS  { wmanIf2BsRegisteredSsEntry }
        ::= { wmanIf2BsSsRspCapabilitiesTable 1 }

WmanIf2BsSsRspCapabilitiesEntry ::= SEQUENCE {
        wmanIf2BsSsRspCapUplinkCidSupport       WmanIf2NumOfCid,
        wmanIf2BsSsRspCapDsxFlowControl         WmanIf2MaxDsxFlowType,
        wmanIf2BsSsRspCapMcaFlowControl         WmanIf2MaxMcaFlowType,
        wmanIf2BsSsRspCapMcpGroupCidSupport     WmanIf2MaxMcpGroupCid,
        wmanIf2BsSsRspCapPkmFlowControl         WmanIf2MaxPkmFlowType,
        wmanIf2BsSsRspCapMaxNumOfSupportedSA    WmanIf2MaxNumOfSaType,
        wmanIf2BsSsRspCapMaxNumOfClassifier     WmanIf2MaxClassifiers,
        wmanIf2BsSsRspCapTtgTransitionGap       WmanIf2SsTransitionGap,
        wmanIf2BsSsRspCapRtgTransitionGap       WmanIf2SsTransitionGap,
        wmanIf2BsSsRspCapDownlinkCidSupport     WmanIf2NumOfCid,
        wmanIf2BsSsRspCapMaxNumBurstToMs        WmanIf2MaxNumBurstTx,
        wmanIf2BsSsRspCapMaxMacLevelDlFrame     WmanIf2MaxMacLevel,
        wmanIf2BsSsRspCapMaxMacLevelUlFrame     WmanIf2MaxMacLevel,
        wmanIf2BsSsRspCapNumOfProvisionedSf     WmanIf2MaxNumProvSf,
        wmanIf2BsSsRspCapPnWindowSize           Integer32,
        wmanIf2BsSsRspCapOfdmLoopPwrControlSw   WmanIf2MinNumFrmPwrCtrl,
        wmanIf2BsSsRspCapOfdmaSdmaPilot         WmanIf2SdmaPilotCap,
        wmanIf2BsSsRspCapOfdmaNoUlHarqChannel   WmanIf2OfdmaNoHarqChan,
        wmanIf2BsSsRspCapOfdmaNoDlHarqChannel   WmanIf2OfdmaNoHarqChan,
        wmanIf2BsSsRspCapOptionsBasic           WmanIf2BasicCapOptions,
        wmanIf2BsSsRspCapOptionsBasic2          WmanIf2BasicCapOptions2,
        wmanIf2BsSsRspCapOptionsOfdm            WmanIf2OfdmCapOptions,
        wmanIf2BsSsRspCapOptionsOfdma           WmanIf2OfdmaCapOptions,
        wmanIf2BsSsRspCapOptionsOfdma2          WmanIf2OfdmaCapOptions2,
        wmanIf2BsSsRspCapCurrentTxPower         WmanIf2CurrentTxPower,
        wmanIf2BsSsRspMaxTxPowerBpsk            WmanIf2MaxTxPowerType,
        wmanIf2BsSsRspMaxTxPowerQpsk            WmanIf2MaxTxPowerType,
        wmanIf2BsSsRspMaxTxPower16Qam           WmanIf2MaxTxPowerType,
        wmanIf2BsSsRspMaxTxPower64Qam           WmanIf2MaxTxPowerType}

wmanIf2BsSsRspCapUplinkCidSupport OBJECT-TYPE
        SYNTAX      WmanIf2NumOfCid
        MAX-ACCESS  read-only
        STATUS      current
        DESCRIPTION
            "Negotiated number of Uplink transport CIDs the SS can
             support."
        ::= { wmanIf2BsSsRspCapabilitiesEntry 1 }

wmanIf2BsSsRspCapDsxFlowControl OBJECT-TYPE
        SYNTAX      WmanIf2MaxDsxFlowType
        MAX-ACCESS  read-only
        STATUS      current
        DESCRIPTION
            "Negotiated maximum number of concurrent DSA, DSC, or DSD
             transactions that may be outstanding."
        ::= { wmanIf2BsSsRspCapabilitiesEntry 2 }

wmanIf2BsSsRspCapMcaFlowControl OBJECT-TYPE
```

```
        SYNTAX      WmanIf2MaxMcaFlowType
        MAX-ACCESS  read-only
        STATUS      current
        DESCRIPTION
            "Negotiated maximum number of concurrent
             MCA transactions that may be outstanding."
        DEFVAL      { 0 }
        ::= { wmanIf2BsSsRspCapabilitiesEntry 3 }

wmanIf2BsSsRspCapMcpGroupCidSupport OBJECT-TYPE
        SYNTAX      WmanIf2MaxMcpGroupCid
        MAX-ACCESS  read-only
        STATUS      current
        DESCRIPTION
            "Negotiated maximum number of simultaneous Multicast
             Polling Groups the SS is capable of belonging to."
        DEFVAL      { 0 }
        ::= { wmanIf2BsSsRspCapabilitiesEntry 4 }

wmanIf2BsSsRspCapPkmFlowControl OBJECT-TYPE
        SYNTAX      WmanIf2MaxPkmFlowType
        MAX-ACCESS  read-only
        STATUS      current
        DESCRIPTION
            "Negotiated maximum number of concurrent PKM
             transactions that may be outstanding."
        DEFVAL      { 0 }
        ::= { wmanIf2BsSsRspCapabilitiesEntry 5 }

wmanIf2BsSsRspCapMaxNumOfSupportedSA OBJECT-TYPE
        SYNTAX      WmanIf2MaxNumOfSaType
        MAX-ACCESS  read-only
        STATUS      current
        DESCRIPTION
            "Negotiated maximum number of supported security
             association of the SS."
        DEFVAL      { 1 }
        ::= { wmanIf2BsSsRspCapabilitiesEntry 6 }

wmanIf2BsSsRspCapMaxNumOfClassifier OBJECT-TYPE
        SYNTAX      WmanIf2MaxClassifiers
        MAX-ACCESS  read-only
        STATUS      current
        DESCRIPTION
            "Negotiated maximum number of admitted Classifiers
             that the SS is allowed to have."
        DEFVAL      { 0 }
        ::= { wmanIf2BsSsRspCapabilitiesEntry 7 }

wmanIf2BsSsRspCapTtgTransitionGap OBJECT-TYPE
        SYNTAX      WmanIf2SsTransitionGap
        UNITS       "microsecond"
        MAX-ACCESS  read-only
        STATUS      current
```



```
        DESCRIPTION
            "This field indicates the negotiated transition speed
             SSTTG for TDD and H-FDD SSs."
        ::= { wmanIf2BsSsRspCapabilitiesEntry 8 }

wmanIf2BsSsRspCapRtgTransitionGap OBJECT-TYPE
        SYNTAX      WmanIf2SsTransitionGap
        UNITS       "microsecond"
        MAX-ACCESS  read-only
        STATUS      current
        DESCRIPTION
            "This field indicates the negotiated transition speed
             SSRTG for TDD and H-FDD SSs."
        ::= { wmanIf2BsSsRspCapabilitiesEntry 9 }

wmanIf2BsSsRspCapDownlinkCidSupport OBJECT-TYPE
        SYNTAX      WmanIf2NumOfCid
        MAX-ACCESS  read-only
        STATUS      current
        DESCRIPTION
            "This object shows the number of Downlink transport CIDs the
             SS can support."
        ::= { wmanIf2BsSsRspCapabilitiesEntry 10 }

wmanIf2BsSsRspCapMaxNumBurstToMs OBJECT-TYPE
        SYNTAX      WmanIf2MaxNumBurstTx
        MAX-ACCESS  read-only
        STATUS      current
        DESCRIPTION
            "Maximum number of bursts transmitted concurrently to the MS
             , including all bursts without CID or with CIDs matching
             the MS CIDs."
        ::= { wmanIf2BsSsRspCapabilitiesEntry 11 }

wmanIf2BsSsRspCapMaxMacLevelDlFrame OBJECT-TYPE
        SYNTAX      WmanIf2MaxMacLevel
        MAX-ACCESS  read-only
        STATUS      current
        DESCRIPTION
           "Maximum amount of MAC level data the MS is capable of
            processing per DL frame. A value of 0 indicates such
            limitation does not exist, except the limitation of
            the physical medium"
        DEFVAL      { 0 }
        ::= { wmanIf2BsSsRspCapabilitiesEntry 12 }

wmanIf2BsSsRspCapMaxMacLevelUlFrame OBJECT-TYPE
        SYNTAX      WmanIf2MaxMacLevel
        MAX-ACCESS  read-only
        STATUS      current
        DESCRIPTION
           "Maximum amount of MAC level data the MS is capable of
            processing per UL frame. A value of 0 indicates such
            limitation does not exist, except the limitation of
```

```
            the physical medium"
        DEFVAL      { 0 }
        ::= { wmanIf2BsSsRspCapabilitiesEntry 13 }

wmanIf2BsSsRspCapNumOfProvisionedSf OBJECT-TYPE
        SYNTAX      WmanIf2MaxNumProvSf
        MAX-ACCESS  read-only
        STATUS      current
        DESCRIPTION
            "When a BS is to transmit multiple DSA transactions for
             provisioned service flows, this object indicates how many
             DSA transactions with provisioned service flows will be
             transmitted."
       ::= { wmanIf2BsSsRspCapabilitiesEntry 14 }

wmanIf2BsSsRspCapPnWindowSize OBJECT-TYPE
        SYNTAX      Integer32 (0 .. 65535)
        MAX-ACCESS  read-only
        STATUS      current
        DESCRIPTION
           "Specifies the size capability of the receiver PN window for
            SAs and management connections. The receiver shall track
            PNs within this window to prevent replay attacks (see
            subclause 7.5.1.2.4)."
        ::= { wmanIf2BsSsRspCapabilitiesEntry 15 }

wmanIf2BsSsRspCapOfdmLoopPwrControlSw OBJECT-TYPE
        SYNTAX      WmanIf2MinNumFrmPwrCtrl
        MAX-ACCESS  read-only
        STATUS      current
        DESCRIPTION
            "This field indicates he minimum number of frames that SS
             takes to switch from the open loop power control scheme to
             the closed loop power control scheme or vice versa."
        ::= { wmanIf2BsSsRspCapabilitiesEntry 16 }

wmanIf2BsSsRspCapOfdmaSdmaPilot OBJECT-TYPE
        SYNTAX      WmanIf2SdmaPilotCap
        MAX-ACCESS  read-only
        STATUS      current
        DESCRIPTION
            "This field indicates the SDMA pilot pattern support for AMC
             zone."
        ::= { wmanIf2BsSsRspCapabilitiesEntry 17 }

wmanIf2BsSsRspCapOfdmaNoUlHarqChannel OBJECT-TYPE
        SYNTAX      WmanIf2OfdmaNoHarqChan
        MAX-ACCESS  read-only
        STATUS      current
        DESCRIPTION
            "This field specifies the number of uplink H-ARQ channels
            (n) the SS supports, where n = 1..16. The value of this
            object should be 0..15."
        ::= { wmanIf2BsSsRspCapabilitiesEntry 18 }
```



```
wmanIf2BsSsRspCapOfdmaNoDlHarqChannel OBJECT-TYPE
        SYNTAX      WmanIf2OfdmaNoHarqChan
        MAX-ACCESS  read-only
        STATUS      current
        DESCRIPTION
            "This field specifies the number of downlink H-ARQ channels
            (n) the SS supports, where n = 1..16. The value of this
            object should be 0..15."
        ::= { wmanIf2BsSsRspCapabilitiesEntry 19 }

wmanIf2BsSsRspCapOptionsBasic OBJECT-TYPE
        SYNTAX      WmanIf2BasicCapOptions
        MAX-ACCESS  read-only
        STATUS      current
        DESCRIPTION
            "Combined BITS encoded general capability options as granted
             by BS for SS."
        ::= { wmanIf2BsSsRspCapabilitiesEntry 20 }

wmanIf2BsSsRspCapOptionsBasic2 OBJECT-TYPE
        SYNTAX      WmanIf2BasicCapOptions2
        MAX-ACCESS  read-only
        STATUS      current
        DESCRIPTION
            "Combined BITS encoded general capability options as granted
             by BS for SS."
        ::= { wmanIf2BsSsRspCapabilitiesEntry 21 }

wmanIf2BsSsRspCapOptionsOfdm OBJECT-TYPE
        SYNTAX      WmanIf2OfdmCapOptions
        MAX-ACCESS  read-only
        STATUS      current
        DESCRIPTION
             "Combined BITS encoded OFDM specific capability options as
granted
             by BS for SS."
        ::= { wmanIf2BsSsRspCapabilitiesEntry 22 }

wmanIf2BsSsRspCapOptionsOfdma OBJECT-TYPE
        SYNTAX      WmanIf2OfdmaCapOptions
        MAX-ACCESS  read-only
        STATUS      current
        DESCRIPTION
             "Combined BITS encoded OFDMA specific capability options as
granted
             by BS for SS."
        ::= { wmanIf2BsSsRspCapabilitiesEntry 23 }

wmanIf2BsSsRspCapOptionsOfdma2 OBJECT-TYPE
        SYNTAX      WmanIf2OfdmaCapOptions2
        MAX-ACCESS  read-only
        STATUS      current
        DESCRIPTION
```

```
            "Combined BITS encoded OFDMA specific capability options
             as granted by BS for SS."
        ::= { wmanIf2BsSsRspCapabilitiesEntry 24 }

wmanIf2BsSsRspCapCurrentTxPower OBJECT-TYPE
        SYNTAX      WmanIf2CurrentTxPower
        UNITS       "0.5 dBm"
        MAX-ACCESS  read-only
        STATUS      current
        DESCRIPTION
            "This parameter indicates the transmitted power used for
             the burst which carried the message."
        ::= { wmanIf2BsSsRspCapabilitiesEntry 25 }

wmanIf2BsSsRspMaxTxPowerBpsk OBJECT-TYPE
        SYNTAX      WmanIf2MaxTxPowerType
        UNITS       "0.5 dBm"
        MAX-ACCESS  read-only
        STATUS      current
        DESCRIPTION
            "The maximum available power for BPSK. The maximum power
             parameters are reported in dBm and quantized in 0.5 dBm
             steps ranging from -64 dBm (encoded 0x00) to 63.5 dBm
             (encoded 0xFF). Values outside this range shall be assigned
             the closest extreme. This parameter is only applicable to
             systems supporting the OFDM or OFDMA PHY."
        ::= { wmanIf2BsSsRspCapabilitiesEntry 26 }

wmanIf2BsSsRspMaxTxPowerQpsk OBJECT-TYPE
        SYNTAX      WmanIf2MaxTxPowerType
        UNITS       "0.5 dBm"
        MAX-ACCESS  read-only
        STATUS      current
        DESCRIPTION
            "The maximum available power for QPSK. The maximum power
             parameters are reported in dBm and quantized in 0.5 dBm
             steps ranging from -64 dBm (encoded 0x00) to 63.5 dBm
             (encoded 0xFF). Values outside this range shall be assigned
             to closest extreme. This parameter is only applicable to
             systems supporting the OFDM or OFDMA PHY."
        ::= { wmanIf2BsSsRspCapabilitiesEntry 27 }

wmanIf2BsSsRspMaxTxPower16Qam OBJECT-TYPE
        SYNTAX      WmanIf2MaxTxPowerType
        UNITS       "0.5 dBm"
        MAX-ACCESS  read-only
        STATUS      current
        DESCRIPTION
            "The maximum available power for 16-QAM constellations.
             The maximum power parameters are reported in dBm and
             quantized in 0.5 dBm steps ranging from -64 dBm (encoded
             0x00) to 63.5 dBm (encoded 0xFF). Values outside this
             range shall be assigned the closest extreme. This parameter
             is only applicable to systems supporting the OFDM or
```



```
             OFDMA PHY."
        ::= { wmanIf2BsSsRspCapabilitiesEntry 28 }

wmanIf2BsSsRspMaxTxPower64Qam OBJECT-TYPE
        SYNTAX      WmanIf2MaxTxPowerType
        UNITS       "0.5 dBm"
        MAX-ACCESS  read-only
        STATUS      current
        DESCRIPTION
            "The maximum available power for 64-QAM constellations.
             The maximum power parameters are reported in dBm and
             quantized in 0.5 dBm steps ranging from -64 dBm (encoded
             0x00) to 63.5 dBm (encoded 0xFF). Values outside this
             range shall be assigned the closest extreme. SSs that do
             not support QAM64 shall report the value of 0x00. This
             parameter is only applicable to systems supporting the OFDM
             or OFDMA PHY."
        ::= { wmanIf2BsSsRspCapabilitiesEntry 29 }

wmanIf2BsBasicCapabilitiesTable OBJECT-TYPE
        SYNTAX      SEQUENCE OF WmanIf2BsBasicCapabilitiesEntry
        MAX-ACCESS  not-accessible
        STATUS      current
        DESCRIPTION
            "This table contains the basic capabilities of the BS as
             implemented in BS hardware and software. These capabilities
             along with the configuration for them
             (wmanIf2BsCapabilitiesConfigTable) are used for negotiation
             of basic capabilities with SS using RNG-RSP, SBC-RSP and
             REG-RSP messages. The negotiated capabilities are obtained
             by interSubclause of SS raw reported capabilities, BS raw
             capabilities and BS configured capabilities. The objects in
             the table have read-only access. The table is maintained
             by BS."
        ::= { wmanIf2BsCm 5 }

wmanIf2BsBasicCapabilitiesEntry OBJECT-TYPE
        SYNTAX      WmanIf2BsBasicCapabilitiesEntry
        MAX-ACCESS  not-accessible
        STATUS      current
        DESCRIPTION
            "This table provides one row for each BS sector."
        INDEX     { ifIndex }
        ::= { wmanIf2BsBasicCapabilitiesTable 1 }

WmanIf2BsBasicCapabilitiesEntry ::= SEQUENCE {
        wmanIf2BsCapUplinkCidSupport            WmanIf2NumOfCid,
        wmanIf2BsCapDsxFlowControl              WmanIf2MaxDsxFlowType,
        wmanIf2BsCapMcaFlowControl              WmanIf2MaxMcaFlowType,
        wmanIf2BsCapMcpGroupCidSupport          WmanIf2MaxMcpGroupCid,
        wmanIf2BsCapPkmFlowControl              WmanIf2MaxPkmFlowType,
        wmanIf2BsCapMaxNumOfSupportedSA         WmanIf2MaxNumOfSaType,
        wmanIf2BsCapMaxNumOfClassifier          WmanIf2MaxClassifiers,
        wmanIf2BsCapTtgTransitionGap            WmanIf2SsTransitionGap,
```

```
        wmanIf2BsCapRtgTransitionGap            WmanIf2SsTransitionGap,
        wmanIf2BsCapDownlinkCidSupport          WmanIf2NumOfCid,
        wmanIf2BsCapMaxNumBurstToMs             WmanIf2MaxNumBurstTx,
        wmanIf2BsCapMaxMacLevelDlFrame          WmanIf2MaxMacLevel,
        wmanIf2BsCapMaxMacLevelUlFrame          WmanIf2MaxMacLevel,
        wmanIf2BsCapNumOfProvisionedSf          WmanIf2MaxNumProvSf,
        wmanIf2BsCapPnWindowSize                Integer32,
        wmanIf2BsCapOfdmLoopPwrControlSw        WmanIf2MinNumFrmPwrCtrl,
        wmanIf2BsCapOfdmaSdmaPilot              WmanIf2SdmaPilotCap,
        wmanIf2BsCapOfdmaNoUlHarqChannel        WmanIf2OfdmaNoHarqChan,
        wmanIf2BsCapOfdmaNoDlHarqChannel        WmanIf2OfdmaNoHarqChan,
        wmanIf2BsCapOptionsBasic                WmanIf2BasicCapOptions,
        wmanIf2BsCapOptionsBasic2               WmanIf2BasicCapOptions2,
        wmanIf2BsCapOptionsOfdm                 WmanIf2OfdmCapOptions,
        wmanIf2BsCapOptionsOfdma                WmanIf2OfdmaCapOptions,
        wmanIf2BsCapOptionsOfdma2               WmanIf2OfdmaCapOptions2}

wmanIf2BsCapUplinkCidSupport OBJECT-TYPE
        SYNTAX      WmanIf2NumOfCid
        MAX-ACCESS  read-only
        STATUS      current
        DESCRIPTION
            "This object shows the number of Uplink transport CIDs the
             BS can support per SS."
        ::= { wmanIf2BsBasicCapabilitiesEntry 1 }

wmanIf2BsCapDsxFlowControl OBJECT-TYPE
        SYNTAX      WmanIf2MaxDsxFlowType
        MAX-ACCESS  read-only
        STATUS      current
        DESCRIPTION
            "This object specifies the maximum number of concurrent
             DSA, DSC, or DSD transactions that BS allows each SS to
             have outstanding."
        DEFVAL      { 0 }
        ::= { wmanIf2BsBasicCapabilitiesEntry 2 }

wmanIf2BsCapMcaFlowControl OBJECT-TYPE
        SYNTAX      WmanIf2MaxMcaFlowType
        MAX-ACCESS  read-only
        STATUS      current
        DESCRIPTION
            "This object specifies the maximum number of concurrent
             MCA transactions that BS allows each SS to have."
        DEFVAL      { 0 }
        ::= { wmanIf2BsBasicCapabilitiesEntry 3 }

wmanIf2BsCapMcpGroupCidSupport OBJECT-TYPE
        SYNTAX      WmanIf2MaxMcpGroupCid
        MAX-ACCESS  read-only
        STATUS      current
        DESCRIPTION
            "This object indicates the maximum number of simultaneous
             Multicast Polling Groups the BS allows each SS to belong
```



```
            to."
        DEFVAL      { 0 }
        ::= { wmanIf2BsBasicCapabilitiesEntry 4 }

wmanIf2BsCapPkmFlowControl OBJECT-TYPE
        SYNTAX      WmanIf2MaxPkmFlowType
        MAX-ACCESS  read-only
        STATUS      current
        DESCRIPTION
            "This object specifies the maximum number of concurrent
             PKM transactions that BS allows each SS to have."
        DEFVAL      { 0 }
        ::= { wmanIf2BsBasicCapabilitiesEntry 5 }

wmanIf2BsCapMaxNumOfSupportedSA OBJECT-TYPE
        SYNTAX      WmanIf2MaxNumOfSaType
        MAX-ACCESS  read-only
        STATUS      current
        DESCRIPTION
            "This field specifies maximum number of supported security
             associations per SS that the BS allows."
        DEFVAL      { 1 }
        ::= { wmanIf2BsBasicCapabilitiesEntry 6 }

wmanIf2BsCapMaxNumOfClassifier OBJECT-TYPE
        SYNTAX      WmanIf2MaxClassifiers
        MAX-ACCESS  read-only
        STATUS      current
        DESCRIPTION
            "This object indicates the maximum number of admitted
             Classifiers per SS that the BS allows."
        DEFVAL      { 0 }
        ::= { wmanIf2BsBasicCapabilitiesEntry 7 }

wmanIf2BsCapTtgTransitionGap OBJECT-TYPE
        SYNTAX      WmanIf2SsTransitionGap
        UNITS       "microsecond"
        MAX-ACCESS  read-only
        STATUS      current
        DESCRIPTION
            "This field indicates the transition speed SSTTG for TDD
             and H-FDD SSs allowed by the BS. The usage is defined by
             WmanIf2SsTransitionGap."
        ::= { wmanIf2BsBasicCapabilitiesEntry 8 }

wmanIf2BsCapRtgTransitionGap OBJECT-TYPE
        SYNTAX      WmanIf2SsTransitionGap
        UNITS       "microsecond"
        MAX-ACCESS  read-only
        STATUS      current
        DESCRIPTION
            "This field indicates the transition speed SSRTG for TDD
             and H-FDD SSs allowed by the BS. The usage is defined
             by WmanIf2SsTransitionGap."
```

```
        ::= { wmanIf2BsBasicCapabilitiesEntry 9 }

wmanIf2BsCapDownlinkCidSupport OBJECT-TYPE
        SYNTAX      WmanIf2NumOfCid
        MAX-ACCESS  read-only
        STATUS      current
        DESCRIPTION
            "This object shows the number of Downlink transport CIDs the
             SS can support."
        ::= { wmanIf2BsBasicCapabilitiesEntry 10 }

wmanIf2BsCapMaxNumBurstToMs OBJECT-TYPE
        SYNTAX      WmanIf2MaxNumBurstTx
        MAX-ACCESS  read-only
        STATUS      current
        DESCRIPTION
            "Maximum number of bursts transmitted concurrently to the MS
             , including all bursts without CID or with CIDs matching
             the MS CIDs."
        ::= { wmanIf2BsBasicCapabilitiesEntry 11 }

wmanIf2BsCapMaxMacLevelDlFrame OBJECT-TYPE
        SYNTAX      WmanIf2MaxMacLevel
        MAX-ACCESS  read-only
        STATUS      current
        DESCRIPTION
           "Maximum amount of MAC level data the MS is capable of
            processing per DL frame. A value of 0 indicates such
            limitation does not exist, except the limitation of
            the physical medium"
        DEFVAL      { 0 }
        ::= { wmanIf2BsBasicCapabilitiesEntry 12 }

wmanIf2BsCapMaxMacLevelUlFrame OBJECT-TYPE
        SYNTAX      WmanIf2MaxMacLevel
        MAX-ACCESS  read-only
        STATUS      current
        DESCRIPTION
           "Maximum amount of MAC level data the MS is capable of
            processing per UL frame. A value of 0 indicates such
            limitation does not exist, except the limitation of
            the physical medium"
        DEFVAL      { 0 }
        ::= { wmanIf2BsBasicCapabilitiesEntry 13 }

wmanIf2BsCapNumOfProvisionedSf OBJECT-TYPE
        SYNTAX      WmanIf2MaxNumProvSf
        MAX-ACCESS  read-only
        STATUS      current
        DESCRIPTION
            "When a BS is to transmit multiple DSA transactions for
             provisioned service flows, this object indicates how many
             DSA transactions with provisioned service flows will be
             transmitted."
```



```
       ::= { wmanIf2BsBasicCapabilitiesEntry 14 }

wmanIf2BsCapPnWindowSize OBJECT-TYPE
        SYNTAX      Integer32 (0 .. 65535)
        MAX-ACCESS  read-only
        STATUS      current
        DESCRIPTION
           "Specifies the size capability of the receiver PN window for
            SAs and management connections. The receiver shall track
            PNs within this window to prevent replay attacks (see
            7.5.1.2.4)."
        ::= { wmanIf2BsBasicCapabilitiesEntry 15 }

wmanIf2BsCapOfdmLoopPwrControlSw OBJECT-TYPE
        SYNTAX      WmanIf2MinNumFrmPwrCtrl
        MAX-ACCESS  read-only
        STATUS      current
        DESCRIPTION
            "This field indicates he minimum number of frames that SS
             takes to switch from the open loop power control scheme to
             the closed loop power control scheme or vice versa."
        ::= { wmanIf2BsBasicCapabilitiesEntry 16 }

wmanIf2BsCapOfdmaSdmaPilot OBJECT-TYPE
        SYNTAX      WmanIf2SdmaPilotCap
        MAX-ACCESS  read-only
        STATUS      current
        DESCRIPTION
            "This field indicates the SDMA pilot pattern support for AMC
             zone."
        ::= { wmanIf2BsBasicCapabilitiesEntry 17 }

wmanIf2BsCapOfdmaNoUlHarqChannel OBJECT-TYPE
        SYNTAX      WmanIf2OfdmaNoHarqChan
        MAX-ACCESS  read-only
        STATUS      current
        DESCRIPTION
            "This field specifies the number of uplink H-ARQ channels
            (n) the SS supports, where n = 1..16. The value of this
            object should be 0..15."
        ::= { wmanIf2BsBasicCapabilitiesEntry 18 }

wmanIf2BsCapOfdmaNoDlHarqChannel OBJECT-TYPE
        SYNTAX      WmanIf2OfdmaNoHarqChan
        MAX-ACCESS  read-only
        STATUS      current
        DESCRIPTION
            "This field specifies the number of downlink H-ARQ channels
            (n) the SS supports, where n = 1..16. The value of this
            object should be 0..15."
        ::= { wmanIf2BsBasicCapabilitiesEntry 19 }

wmanIf2BsCapOptionsBasic OBJECT-TYPE
        SYNTAX      WmanIf2BasicCapOptions
```

```
        MAX-ACCESS  read-only
        STATUS      current
        DESCRIPTION
            "Combined BITS encoded general BS capability options."
        ::= { wmanIf2BsBasicCapabilitiesEntry 20 }

wmanIf2BsCapOptionsBasic2 OBJECT-TYPE
        SYNTAX      WmanIf2BasicCapOptions2
        MAX-ACCESS  read-only
        STATUS      current
        DESCRIPTION
            "Combined BITS encoded general BS capability options."
        ::= { wmanIf2BsBasicCapabilitiesEntry 21 }

wmanIf2BsCapOptionsOfdm OBJECT-TYPE
        SYNTAX      WmanIf2OfdmCapOptions
        MAX-ACCESS  read-only
        STATUS      current
        DESCRIPTION
            "Combined BITS encoded OFDM specific BS capability options."
        ::= { wmanIf2BsBasicCapabilitiesEntry 22 }

wmanIf2BsCapOptionsOfdma OBJECT-TYPE
        SYNTAX      WmanIf2OfdmaCapOptions
        MAX-ACCESS  read-only
        STATUS      current
        DESCRIPTION
            "Combined BITS encoded OFDMA specific BS capability options.
            "
        ::= { wmanIf2BsBasicCapabilitiesEntry 23 }

wmanIf2BsCapOptionsOfdma2 OBJECT-TYPE
        SYNTAX      WmanIf2OfdmaCapOptions2
        MAX-ACCESS  read-only
        STATUS      current
        DESCRIPTION
            "Combined BITS encoded OFDMA specific BS capability options.
            "
        ::= { wmanIf2BsBasicCapabilitiesEntry 24 }

wmanIf2BsCapabilitiesConfigTable OBJECT-TYPE
        SYNTAX      SEQUENCE OF WmanIf2BsCapabilitiesConfigEntry
        MAX-ACCESS  not-accessible
        STATUS      current
        DESCRIPTION
            "This table contains the configuration for basic
             capabilities of BS. The table is intended to be used to
             restrict the Capabilities implemented by BS, for example in
             order to comply with local regulatory requirements. The BS
             should use the configuration along with the implemented
             Capabilities (wmanIf2BsBasicCapabilitiesTable) for
             negotiation of basic capabilities with SS using RNG-RSP,
             SBC-RSP and REG-RSP messages. The negotiated capabilities
             are obtained by interSubclause of SS reported capabilities,
```



```
             BS raw capabilities and BS configured capabilities. The
             objects in the table have read-write access. The rows are
             created by BS as a copy of wmanIf2BsBasicCapabilitiesTable
             and can be modified by NMS."
        ::= { wmanIf2BsCm 6 }

wmanIf2BsCapabilitiesConfigEntry OBJECT-TYPE
        SYNTAX      WmanIf2BsCapabilitiesConfigEntry
        MAX-ACCESS  not-accessible
        STATUS      current
        DESCRIPTION
            "This table provides one row for each BS sector."
        INDEX     { ifIndex }
        ::= { wmanIf2BsCapabilitiesConfigTable 1 }

WmanIf2BsCapabilitiesConfigEntry ::= SEQUENCE {
        wmanIf2BsCapCfgUplinkCidSupport         WmanIf2NumOfCid,
        wmanIf2BsCapCfgDsxFlowControl           WmanIf2MaxDsxFlowType,
        wmanIf2BsCapCfgMcaFlowControl           WmanIf2MaxMcaFlowType,
        wmanIf2BsCapCfgMcpGroupCidSupport       WmanIf2MaxMcpGroupCid,
        wmanIf2BsCapCfgPkmFlowControl           WmanIf2MaxPkmFlowType,
        wmanIf2BsCapCfgMaxNumOfSupportedSA      WmanIf2MaxNumOfSaType,
        wmanIf2BsCapCfgMaxNumOfClassifier       WmanIf2MaxClassifiers,
        wmanIf2BsCapCfgTtgTransitionGap         WmanIf2SsTransitionGap,
        wmanIf2BsCapCfgRtgTransitionGap         WmanIf2SsTransitionGap,
        wmanIf2BsCapCfgDownlinkCidSupport       WmanIf2NumOfCid,
        wmanIf2BsCapCfgMaxNumBurstToMs          WmanIf2MaxNumBurstTx,
        wmanIf2BsCapCfgMaxMacLevelDlFrame       WmanIf2MaxMacLevel,
        wmanIf2BsCapCfgMaxMacLevelUlFrame       WmanIf2MaxMacLevel,
        wmanIf2BsCapCfgNumOfProvisionedSf       WmanIf2MaxNumProvSf,
        wmanIf2BsCapCfgPnWindowSize             Integer32,
        wmanIf2BsCapCfgOfdmLoopPwrControlSw     WmanIf2MinNumFrmPwrCtrl,
        wmanIf2BsCapCfgOfdmaSdmaPilot           WmanIf2SdmaPilotCap,
        wmanIf2BsCapCfgOfdmaNoUlHarqChannel     WmanIf2OfdmaNoHarqChan,
        wmanIf2BsCapCfgOfdmaNoDlHarqChannel     WmanIf2OfdmaNoHarqChan,
        wmanIf2BsCapCfgOptionsBasic             WmanIf2BasicCapOptions,
        wmanIf2BsCapCfgOptionsBasic2            WmanIf2BasicCapOptions2,
        wmanIf2BsCapCfgOptionsOfdm              WmanIf2OfdmCapOptions,
        wmanIf2BsCapCfgOptionsOfdma             WmanIf2OfdmaCapOptions,
        wmanIf2BsCapCfgOptionsOfdma2            WmanIf2OfdmaCapOptions2}

wmanIf2BsCapCfgUplinkCidSupport OBJECT-TYPE
        SYNTAX      WmanIf2NumOfCid
        MAX-ACCESS  read-write
        STATUS      current
        DESCRIPTION
            "This object shows the configured number of Uplink transport
             CIDs the BS can support per SS."
        ::= { wmanIf2BsCapabilitiesConfigEntry 1 }

wmanIf2BsCapCfgDsxFlowControl OBJECT-TYPE
        SYNTAX      WmanIf2MaxDsxFlowType
        MAX-ACCESS  read-write
        STATUS      current
```

```
        DESCRIPTION
            "This object specifies the configured maximum number of
             concurrent DSA, DSC, or DSD transactions that BS allows
             each SS to have outstanding."
        DEFVAL      { 0 }
        ::= { wmanIf2BsCapabilitiesConfigEntry 2 }

wmanIf2BsCapCfgMcaFlowControl OBJECT-TYPE
        SYNTAX      WmanIf2MaxMcaFlowType
        MAX-ACCESS  read-write
        STATUS      current
        DESCRIPTION
            "This object specifies the maximum number of concurrent
             MCA transactions that BS is configured to allow each SS to
             have."
        DEFVAL      { 0 }
        ::= { wmanIf2BsCapabilitiesConfigEntry 3 }

wmanIf2BsCapCfgMcpGroupCidSupport OBJECT-TYPE
        SYNTAX      WmanIf2MaxMcpGroupCid
        MAX-ACCESS  read-write
        STATUS      current
        DESCRIPTION
            "This object indicates the maximum number of simultaneous
             Multicast Polling Groups the BS is configured to allow
             each SS to belong to."
        DEFVAL      { 0 }
        ::= { wmanIf2BsCapabilitiesConfigEntry 4 }

wmanIf2BsCapCfgPkmFlowControl OBJECT-TYPE
        SYNTAX      WmanIf2MaxPkmFlowType
        MAX-ACCESS  read-write
        STATUS      current
        DESCRIPTION
            "This object specifies the maximum number of concurrent
             PKM transactions that BS is configured to allow each SS
             to have."
        DEFVAL      { 0 }
        ::= { wmanIf2BsCapabilitiesConfigEntry 5 }

wmanIf2BsCapCfgMaxNumOfSupportedSA OBJECT-TYPE
        SYNTAX      WmanIf2MaxNumOfSaType
        MAX-ACCESS  read-write
        STATUS      current
        DESCRIPTION
            "This field specifies configured maximum number of supported
             security association per SS."
        DEFVAL      { 1 }
        ::= { wmanIf2BsCapabilitiesConfigEntry 6 }

wmanIf2BsCapCfgMaxNumOfClassifier OBJECT-TYPE
        SYNTAX      WmanIf2MaxClassifiers
        MAX-ACCESS  read-write
        STATUS      current
```



```
        DESCRIPTION
            "This object indicates the configured maximum number of
             admitted Classifiers per SS that the BS can support."
        DEFVAL      { 0 }
        ::= { wmanIf2BsCapabilitiesConfigEntry 7 }

wmanIf2BsCapCfgTtgTransitionGap OBJECT-TYPE
        SYNTAX      WmanIf2SsTransitionGap
        UNITS       "microsecond"
        MAX-ACCESS  read-write
        STATUS      current
        DESCRIPTION
            "This field indicates the configured transition speed
             SSTTG for TDD and H-FDD SSs. The usage is defined by
             WmanIf2SsTransitionGap."
        ::= { wmanIf2BsCapabilitiesConfigEntry 8 }

wmanIf2BsCapCfgRtgTransitionGap OBJECT-TYPE
        SYNTAX      WmanIf2SsTransitionGap
        UNITS       "microsecond"
        MAX-ACCESS  read-write
        STATUS      current
        DESCRIPTION
            "This field indicates the configured transition speed
             SSRTG for TDD and H-FDD SSs. The usage is defined by
             WmanIf2SsTransitionGap."
        ::= { wmanIf2BsCapabilitiesConfigEntry 9 }

wmanIf2BsCapCfgDownlinkCidSupport OBJECT-TYPE
        SYNTAX      WmanIf2NumOfCid
        MAX-ACCESS  read-write
        STATUS      current
        DESCRIPTION
            "This object shows the number of Downlink transport CIDs
             the SS can support."
        ::= { wmanIf2BsCapabilitiesConfigEntry 10 }

wmanIf2BsCapCfgMaxNumBurstToMs OBJECT-TYPE
        SYNTAX      WmanIf2MaxNumBurstTx
        MAX-ACCESS  read-write
        STATUS      current
        DESCRIPTION
            "Maximum number of bursts transmitted concurrently to the MS
             , including all bursts without CID or with CIDs matching
             the MS CIDs."
        ::= { wmanIf2BsCapabilitiesConfigEntry 11 }

wmanIf2BsCapCfgMaxMacLevelDlFrame OBJECT-TYPE
        SYNTAX      WmanIf2MaxMacLevel
        MAX-ACCESS  read-write
        STATUS      current
        DESCRIPTION
           "Maximum amount of MAC level data the MS is capable of
            processing per DL frame. A value of 0 indicates such
```

```
            limitation does not exist, except the limitation of
            the physical medium"
        DEFVAL      { 0 }
        ::= { wmanIf2BsCapabilitiesConfigEntry 12 }

wmanIf2BsCapCfgMaxMacLevelUlFrame OBJECT-TYPE
        SYNTAX      WmanIf2MaxMacLevel
        MAX-ACCESS  read-write
        STATUS      current
        DESCRIPTION
           "Maximum amount of MAC level data the MS is capable of
            processing per UL frame. A value of 0 indicates such
            limitation does not exist, except the limitation of
            the physical medium"
        DEFVAL      { 0 }
        ::= { wmanIf2BsCapabilitiesConfigEntry 13 }

wmanIf2BsCapCfgNumOfProvisionedSf OBJECT-TYPE
        SYNTAX      WmanIf2MaxNumProvSf
        MAX-ACCESS  read-write
        STATUS      current
        DESCRIPTION
            "When a BS is to transmit multiple DSA transactions for
             provisioned service flows, this object indicates how many
             DSA transactions with provisioned service flows will be
             transmitted."
     ::= { wmanIf2BsCapabilitiesConfigEntry 14 }

wmanIf2BsCapCfgPnWindowSize OBJECT-TYPE
        SYNTAX      Integer32 (0 .. 65535)
        MAX-ACCESS  read-write
        STATUS      current
        DESCRIPTION
           "Specifies the size capability of the receiver PN window for
            SAs and management connections. The receiver shall track
            PNs within this window to prevent replay attacks (see
            subclause 7.5.1.2.4)."
        ::= { wmanIf2BsCapabilitiesConfigEntry 15 }

wmanIf2BsCapCfgOfdmLoopPwrControlSw OBJECT-TYPE
        SYNTAX      WmanIf2MinNumFrmPwrCtrl
        MAX-ACCESS  read-write
        STATUS      current
        DESCRIPTION
            "This field indicates he minimum number of frames that SS
             takes to switch from the open loop power control scheme to
             the closed loop power control scheme or vice versa."
        ::= { wmanIf2BsCapabilitiesConfigEntry 16 }

wmanIf2BsCapCfgOfdmaSdmaPilot OBJECT-TYPE
        SYNTAX      WmanIf2SdmaPilotCap
        MAX-ACCESS  read-write
        STATUS      current
        DESCRIPTION
```



```
            "This field indicates the SDMA pilot pattern support for AMC
             zone."
        ::= { wmanIf2BsCapabilitiesConfigEntry 17 }

wmanIf2BsCapCfgOfdmaNoUlHarqChannel OBJECT-TYPE
        SYNTAX      WmanIf2OfdmaNoHarqChan
        MAX-ACCESS  read-write
        STATUS      current
        DESCRIPTION
            "This field specifies the number of uplink H-ARQ channels
            (n) the SS supports, where n = 1..16. The value of this
            object should be 0..15."
        ::= { wmanIf2BsCapabilitiesConfigEntry 18 }

wmanIf2BsCapCfgOfdmaNoDlHarqChannel OBJECT-TYPE
        SYNTAX      WmanIf2OfdmaNoHarqChan
        MAX-ACCESS  read-write
        STATUS      current
        DESCRIPTION
            "This field specifies the number of downlink H-ARQ channels
            (n) the SS supports, where n = 1..16. The value of this
            object should be 0..15."
        ::= { wmanIf2BsCapabilitiesConfigEntry 19 }

wmanIf2BsCapCfgOptionsBasic OBJECT-TYPE
        SYNTAX      WmanIf2BasicCapOptions
        MAX-ACCESS  read-write
        STATUS      current
        DESCRIPTION
            "Combined BITS encoded general capability options cofigured
             on BS. These object typically restricts availability of BS
             supported features."
        ::= { wmanIf2BsCapabilitiesConfigEntry 20 }

wmanIf2BsCapCfgOptionsBasic2 OBJECT-TYPE
        SYNTAX      WmanIf2BasicCapOptions2
        MAX-ACCESS  read-only
        STATUS      current
        DESCRIPTION
            "Combined BITS encoded general capability options cofigured
             on BS. These object typically restricts availability of BS
             supported features."
        ::= { wmanIf2BsCapabilitiesConfigEntry 21 }

wmanIf2BsCapCfgOptionsOfdm OBJECT-TYPE
        SYNTAX      WmanIf2OfdmCapOptions
        MAX-ACCESS  read-only
        STATUS      current
        DESCRIPTION
            "Combined BITS encoded OFDM specific capability options
             cofigured on BS. These object typically restricts
             availability of BS supported OFDM specific features."
        ::= { wmanIf2BsCapabilitiesConfigEntry 22 }
```

```
wmanIf2BsCapCfgOptionsOfdma OBJECT-TYPE
        SYNTAX      WmanIf2OfdmaCapOptions
        MAX-ACCESS  read-only
        STATUS      current
        DESCRIPTION
            "Combined BITS encoded OFDMA specific capability options
             cofigured on BS. These object typically restricts
             availability of BS supported OFDMA specific features."
        ::= { wmanIf2BsCapabilitiesConfigEntry 23 }

wmanIf2BsCapCfgOptionsOfdma2 OBJECT-TYPE
        SYNTAX      WmanIf2OfdmaCapOptions2
        MAX-ACCESS  read-only
        STATUS      current
        DESCRIPTION
            "Combined BITS encoded OFDMA specific capability options
             cofigured on BS. These object typically restricts
             availability of BS supported OFDMA specific features."
        ::= { wmanIf2BsCapabilitiesConfigEntry 24 }

wmanIf2BsSsActionsTable OBJECT-TYPE
        SYNTAX      SEQUENCE OF WmanIf2BsSsActionsEntry
        MAX-ACCESS  not-accessible
        STATUS      current
        DESCRIPTION
            "This table contains all the actions specified for SSs in
             the standard. The actions are routed down to SS using
             unsolicited MAC messages: REG-RSP, DREG-REQ, PRC-LT-CTRL
              and RES-CMD. The table also contains the parameters of the
actions in
             cases where they are specified by the standard."
        ::= { wmanIf2BsCm 7 }

wmanIf2BsSsActionsEntry OBJECT-TYPE
        SYNTAX      WmanIf2BsSsActionsEntry
        MAX-ACCESS  not-accessible
        STATUS      current
        DESCRIPTION
            "The action can be requested for SS in any state not only
             those registered. However BS will decide whether the action
             is applicable to the SS based on its current state and
             execute it or skip it as defined in each action definition.
             "
        INDEX     { wmanIf2BsSsActionsMacAddress }
        ::= { wmanIf2BsSsActionsTable 1 }

WmanIf2BsSsActionsEntry ::= SEQUENCE {
        wmanIf2BsSsActionsMacAddress            MacAddress,
        wmanIf2BsSsActionsResetSs               Integer32,
        wmanIf2BsSsActionsAbortSs               Integer32,
        wmanIf2BsSsActionsOverrideDnFreq        Unsigned32,
        wmanIf2BsSsActionsOverrideChannelId     Integer32,
        wmanIf2BsSsActionsDeReRegSs             Integer32,
        wmanIf2BsSsActionsDeReRegSsCode         Integer32,
```



```
        wmanIf2BsSsActionsMimoPrecoding         WmanIf2MimoPrecoding,
        wmanIf2BsSsActionsMimoPrecodingDelay    Unsigned32,
        wmanIf2BsSsActionsRowStatus             RowStatus}

wmanIf2BsSsActionsMacAddress OBJECT-TYPE
        SYNTAX      MacAddress
        MAX-ACCESS  not-accessible
        STATUS      current
        DESCRIPTION
            "This object uniquely identifies the SS as an action
             target."
        ::= { wmanIf2BsSsActionsEntry 1 }

wmanIf2BsSsActionsResetSs OBJECT-TYPE
        SYNTAX      INTEGER {actionsResetSsNoAction(0),
                             actionsResetSs(1)}
        MAX-ACCESS  read-create
        STATUS      current
        DESCRIPTION
            "This object should be implemented as follows:
             - When set to actionsResetSs value, instructs BS to send
               RES-CMD to SS
             - When set to value different than actionsResetSs it
               should be ignored
             - When read it should return actionsResetSsNoAction
             The RES-CMD message shall be transmitted by the BS on an
             SS Basic CID to force the SS to reset itself,
             reinitialize its MAC, and repeat initial system access."
        REFERENCE
            "Subclause 6.3.2.3.22"
        ::= { wmanIf2BsSsActionsEntry 2 }

wmanIf2BsSsActionsAbortSs OBJECT-TYPE
        SYNTAX      INTEGER {actionsAbortSsNoAction(0),
                             actionsAbortSs(1),
                             actionAbortSsParams(2)}

        MAX-ACCESS  read-create
        STATUS      current
        DESCRIPTION
            "This object should be implemented as follows:
               - When set to actionsAbortSs value, it instructs BS to
                 send unsolicited RNG-RSP with Ranging Status equal to
                 'abort' without override parameters
               - When set to actionAbortSsParams value, it instructs BS
                 to send unsolicited RNG-RSP with Ranging Status equal
                 to 'abort' and with 'Downlink Frequency Override' and
                 'Uplink Channel ID Override' parameters.
               - When set to any other value it should be ignored
               - When read it should returned actionsAbortSsNoAction"
        REFERENCE
            "Subclause 11.6, Table 580"
        ::= { wmanIf2BsSsActionsEntry 3 }
```

```
wmanIf2BsSsActionsOverrideDnFreq OBJECT-TYPE
        SYNTAX      Unsigned32
        UNITS       "kHz"
        MAX-ACCESS  read-create
        STATUS      current
        DESCRIPTION
            "This object is used as a parmeter of the AbortSs action
             with the code actionAbortSsParams. It is used for licensed
             bands only. It defines the Center frequency, in kHz, of
             new downlink channel where the SS should redo initial
             ranging."
        REFERENCE
            "Subclause 11.6, Table 580"
        ::= { wmanIf2BsSsActionsEntry 4 }

wmanIf2BsSsActionsOverrideChannelId OBJECT-TYPE
        SYNTAX      Integer32 (0..199)
        MAX-ACCESS  read-create
        STATUS      current
        DESCRIPTION
            "This object is used as a parmeter of the AbortSs action
             with the code actionAbortSsParams. It is coded as follows:
               - Licensed bands: The identifier of the uplink channel
                 with which the SS is to redo initial ranging (not used
                 with PHYs without channelized uplinks).
               - License-exempt bands: The Channel Nr (see 8.5.1) where
                 the SS should redo initial ranging."
        REFERENCE
            "Subclause 11.6, Table 584"
        ::= { wmanIf2BsSsActionsEntry 5 }

wmanIf2BsSsActionsDeReRegSs OBJECT-TYPE
        SYNTAX      INTEGER {actionsDeReRegSsNoAction(0),
                             actionsDeReRegSs(1)}
        MAX-ACCESS  read-create
        STATUS      current
        DESCRIPTION
            "This object should be implemented as follows:
                 - When set to actionsDeReRegSs value, instructs BS to
                   send DREG-CMD to SS with specified action code
                 - When set to value different than actionsDeReRegSs it
                   should be ignored
                 - When read it should return actionsDeReRegSsNoAction

             The DREG-CMD message shall be transmitted by the BS on an
             SS Basic CID to force the SS to change its access state.
             Upon receiving a DREG-CMD, the SS shall take the action
             indicated by the action code defined by
             wmanIf2BsSsActionsDeReRegSsCode."
        REFERENCE
            "Subclause 6.3.2.3.26"
        ::= { wmanIf2BsSsActionsEntry 6 }

wmanIf2BsSsActionsDeReRegSsCode OBJECT-TYPE
```



```
        SYNTAX      INTEGER {actionsDeReRegSsCodeChangeChan(0),
                             actionsDeReRegSsCodeNoTransmit(1),
                             actionsDeReRegSsCodeLtdTransmit(2),
                             actionsDeReRegSsCodeResume(3)}
        MAX-ACCESS  read-create
        STATUS      current
        DESCRIPTION
            "This object defines the action code for
             wmanIf2BsSsActionsDeReRegSs action. The codes are defined
             as follows:
                 0 - SS shall leave the current channel and attempt to
                     access another channel.
                 1 - SS shall listen to the current channel but shall
                     not transmit until an RES-CMD message or DREG_CMD
                     with an Action Code that allows transmission is
                     received.
                 2 - SS shall listen to the current channel but only
                     transmit on the Basic, Primary Management and 2nd
                     Management Connections.
                 3 - SS shall return to normal operation and may
                     transmit on any of its active connections."
        REFERENCE
            "Subclause 6.3.2.3.26"
        ::= { wmanIf2BsSsActionsEntry 7 }

wmanIf2BsSsActionsMimoPrecoding OBJECT-TYPE
        SYNTAX      WmanIf2MimoPrecoding
        MAX-ACCESS  read-create
        STATUS      current
        DESCRIPTION
            "This object indicates whether long-term precoding with
             feedback from a particular MS is truned on or off. It is
             sent in the PRC-LT-CTRL message."
        ::= { wmanIf2BsSsActionsEntry 8 }

wmanIf2BsSsActionsMimoPrecodingDelay OBJECT-TYPE
        SYNTAX      Unsigned32
        UNITS       "frames"
        MAX-ACCESS  read-create
        STATUS      current
        DESCRIPTION
            "This object indicates the delay in number of frames beyond
             the minimal delay of 1 frame for when precoding information
             feedback from the MS to the BS can or will be applied."
        ::= { wmanIf2BsSsActionsEntry 9 }

wmanIf2BsSsActionsRowStatus OBJECT-TYPE
        SYNTAX      RowStatus
        MAX-ACCESS  read-create
        STATUS      current
        DESCRIPTION
            "This object is used to ensure that the write operation to
             multiple columns is guaranteed to be treated as atomic
             operation by agent."
```

```
        ::= { wmanIf2BsSsActionsEntry 10 }

wmanIf2BsMulticastPollingTable OBJECT-TYPE
        SYNTAX      SEQUENCE OF WmanIf2BsMulticastPollingEntry
        MAX-ACCESS  not-accessible
        STATUS      current
        DESCRIPTION
            "This table contains the multicast polling group information
             . BS can send MCA-REQ message to assign/remove a SS to/from
             a multicast polling group. An entry is created when a SS is
             assigned to a multicast polling group; and deleted when a
             SS is removed from a multicast polling group."
        REFERENCE
             "Subclause 6.3.2.3.18"
        ::= { wmanIf2BsCm 8 }

wmanIf2BsMulticastPollingEntry OBJECT-TYPE
        SYNTAX      WmanIf2BsMulticastPollingEntry
        MAX-ACCESS  not-accessible
        STATUS      current
        DESCRIPTION
            ""
        INDEX     { wmanIf2BsSsMacAddress,
                    wmanIf2BsMulticastPollingCid}
        ::= { wmanIf2BsMulticastPollingTable 1 }

WmanIf2BsMulticastPollingEntry ::= SEQUENCE {
        wmanIf2BsMulticastPollingCid            WmanIf2TcCidType,
        wmanIf2BsMulticastGroupType             Integer32,
        wmanIf2BsPeriodAllocationParameterM     Integer32,
        wmanIf2BsPeriodAllocationParameterK     Integer32,
        wmanIf2BsPeriodAllocationParameterN     Integer32,
        wmanIf2BsPeriodicAllocationType         Integer32}

wmanIf2BsMulticastPollingCid OBJECT-TYPE
        SYNTAX      WmanIf2TcCidType
        MAX-ACCESS  not-accessible
        STATUS      current
        DESCRIPTION
            "A 16 bit channel identifier points to the connection being
             created by DSA for this service flow. When '0' is returned
             from reading this object, it means no CID has been assigned
             to this service flow yet."
        ::= { wmanIf2BsMulticastPollingEntry 1 }

wmanIf2BsMulticastGroupType OBJECT-TYPE
        SYNTAX      INTEGER {regular(0),
                             aas(1)}
        MAX-ACCESS  read-only
        STATUS      current
        DESCRIPTION
            "Multicast group type."
        REFERENCE
             "Subclause 11.10"
```



```
        DEFVAL      { 0 }
        ::= { wmanIf2BsMulticastPollingEntry 2 }

wmanIf2BsPeriodAllocationParameterM OBJECT-TYPE
        SYNTAX      Integer32 ( 0 .. 255 )
        MAX-ACCESS  read-only
        STATUS      current
        DESCRIPTION
            "Periodic allocation parameter = 'm'
             Parameters m, k have the following meaning: multicast group
             gets a multicast polling allocation at the end of the frame
             #N if N mod k = m; size of the allocation is n."
        REFERENCE
             "Subclause 11.10"
        ::= { wmanIf2BsMulticastPollingEntry 3 }

wmanIf2BsPeriodAllocationParameterK OBJECT-TYPE
        SYNTAX      Integer32 ( 0 .. 255 )
        MAX-ACCESS  read-only
        STATUS      current
        DESCRIPTION
            "Periodic allocation parameter = 'k'
             Parameters m, k have the following meaning: multicast group
             gets a multicast polling allocation at the end of the frame
             #N if N mod k = m; size of the allocation is n."
        REFERENCE
             "Subclause 11.10"
        ::= { wmanIf2BsMulticastPollingEntry 4 }

wmanIf2BsPeriodAllocationParameterN OBJECT-TYPE
        SYNTAX      Integer32 ( 0 .. 255 )
        MAX-ACCESS  read-only
        STATUS      current
        DESCRIPTION
            "Periodic allocation parameter = 'n'
             Parameters m, k have the following meaning: multicast group
             gets a multicast polling allocation at the end of the frame
             #N if N mod k = m; size of the allocation is n."
        REFERENCE
             "Subclause 11.10"
        ::= { wmanIf2BsMulticastPollingEntry 5 }

wmanIf2BsPeriodicAllocationType OBJECT-TYPE
        SYNTAX      INTEGER {reqRegionFull(0),
                             regRegionFocused(1)}
        MAX-ACCESS  read-only
        STATUS      current
        DESCRIPTION
            "Periodic allocation type. Applicable for OFDM PHY only."
        REFERENCE
             "Subclause 11.10"
        ::= { wmanIf2BsMulticastPollingEntry 6 }

--
```

```
-- Base station PHY Group
--
wmanIf2BsPhy OBJECT IDENTIFIER ::= { wmanIf2BsCm 9 }

--
-- BS Common PHY objects
--
wmanIf2BsCmnPhy OBJECT IDENTIFIER ::= { wmanIf2BsPhy 1 }

wmanIf2BsCmnPhyUplinkChannelTable OBJECT-TYPE
        SYNTAX      SEQUENCE OF WmanIf2BsCmnPhyUplinkChannelEntry
        MAX-ACCESS  not-accessible
        STATUS      current
        DESCRIPTION
            "This table contains common channel attributes that
             characterize the uplink channels"
        REFERENCE
            "Table 567"
        ::= { wmanIf2BsCmnPhy 1 }

wmanIf2BsCmnPhyUplinkChannelEntry OBJECT-TYPE
        SYNTAX      WmanIf2BsCmnPhyUplinkChannelEntry
        MAX-ACCESS  not-accessible
        STATUS      current
        DESCRIPTION
             "This table provides one row for each uplink channel of
              multi-sector BS. An entry in this table exists for each
              ifEntry of BS with an ifType of ieee80216WMAN."
        INDEX     { ifIndex }
        ::= { wmanIf2BsCmnPhyUplinkChannelTable 1 }

WmanIf2BsCmnPhyUplinkChannelEntry ::= SEQUENCE {
        wmanIf2BsCmnPhyCtBasedResvTimeout       Integer32,
        wmanIf2BsCmnPhyUplinkCenterFreq         Unsigned32,
        wmanIf2BsCmnPhyHoRangingStart           Integer32,
        wmanIf2BsCmnPhyHoRangingEnd             Integer32,
        wmanIf2BsCmnPhyUlRadioResource          Integer32,
        wmanIf2BsCmnPhyUlConfigChangeCount      Integer32}

wmanIf2BsCmnPhyCtBasedResvTimeout OBJECT-TYPE
        SYNTAX      Integer32 (1..255)
        MAX-ACCESS  read-write
        STATUS      current
        DESCRIPTION
            "The number of UL-MAPs to receive before contention-based
             reservation is attempted again for the same connection."
        ::= { wmanIf2BsCmnPhyUplinkChannelEntry 1 }

wmanIf2BsCmnPhyUplinkCenterFreq OBJECT-TYPE
        SYNTAX      Unsigned32
        UNITS       "kHz"
        MAX-ACCESS  read-write
        STATUS      current
        DESCRIPTION
```



```
            " Uplink center frequency (kHz)"
        ::= { wmanIf2BsCmnPhyUplinkChannelEntry 2 }

wmanIf2BsCmnPhyHoRangingStart OBJECT-TYPE
        SYNTAX      Integer32 (0..15)
        MAX-ACCESS  read-write
        STATUS      current
        DESCRIPTION
            "Initial backoff window size for MS performing initial
             ranging during handover process, expressed as a power of 2"
        ::= { wmanIf2BsCmnPhyUplinkChannelEntry 3 }

wmanIf2BsCmnPhyHoRangingEnd OBJECT-TYPE
        SYNTAX      Integer32 (0..15)
        MAX-ACCESS  read-write
        STATUS      current
        DESCRIPTION
            "Final backoff window size for MS performing initial
             ranging during handover process, expressed as a power
             of 2."
        ::= { wmanIf2BsCmnPhyUplinkChannelEntry 4 }

wmanIf2BsCmnPhyUlRadioResource OBJECT-TYPE
        SYNTAX      Integer32 (0 .. 100)
        UNITS       "%"
        MAX-ACCESS  read-write
        STATUS      current
        DESCRIPTION
            "Indicates the average percentage ratio of non-assigned UL
             radio resources to the total usable UL radio resources."
        ::= { wmanIf2BsCmnPhyUplinkChannelEntry 5 }

wmanIf2BsCmnPhyUlConfigChangeCount OBJECT-TYPE
        SYNTAX      Integer32
        MAX-ACCESS  read-write
        STATUS      current
        DESCRIPTION
            "This represents the BS current UCD configuration change
             count."
        ::= { wmanIf2BsCmnPhyUplinkChannelEntry 6 }

wmanIf2BsCmnPhyDownlinkChannelTable OBJECT-TYPE
        SYNTAX      SEQUENCE OF WmanIf2BsCmnPhyDownlinkChannelEntry
        MAX-ACCESS  not-accessible
        STATUS      current
        DESCRIPTION
            "This table contains common channel attributes that
             charaterize the downlink channels"
        REFERENCE
            "Table 574"
        ::= { wmanIf2BsCmnPhy 2 }

wmanIf2BsCmnPhyDownlinkChannelEntry OBJECT-TYPE
        SYNTAX      WmanIf2BsCmnPhyDownlinkChannelEntry
```

```
        MAX-ACCESS  not-accessible
        STATUS      current
        DESCRIPTION
            "This table provides one row for each downlink channel of
             multi-sector BS. An entry in this table exists for each
             ifEntry of BS with an ifType of ieee80216WMAN."
        INDEX     { ifIndex }
        ::= { wmanIf2BsCmnPhyDownlinkChannelTable 1 }

WmanIf2BsCmnPhyDownlinkChannelEntry ::= SEQUENCE {
        wmanIf2BsCmnPhyBsEIRP                   Integer32,
        wmanIf2BsCmnPhyChannelNumber            WmanIf2TcChannelNumber,
        wmanIf2BsCmnPhyMaxEirp                  Integer32,
        wmanIf2BsCmnPhyDownlinkCenterFreq       Unsigned32,
        wmanIf2BsCmnPhyBsId                     WmanIf2TcBsIdType,
        wmanIf2BsCmnPhyMacVersion               WmanIf2TcMacVersion,
        wmanIf2BsCmnPhyCyclicPrefix             WmanIf2TcOfdmaCp,
        wmanIf2BsCmnPhyDlRadioResource          Integer32,
        wmanIf2BsCmnPhyHysteresisMargin         Integer32,
        wmanIf2BsCmnPhyTimeToTriggerDuration    Integer32,
        wmanIf2BsCmnPhyMihCapability            WmanIf2TcMihCapability,
        wmanIf2BsCmnPhyNspChangeCount           Integer32,
        wmanIf2BsCmnPhyCellType                 WmanIf2TcCellType,
        wmanIf2BsCmnPhyBsRestartCount           Integer32,
        wmanIf2BsCmnPhyDlConfigChangeCount      Integer32,
        wmanIf2BsCmnPhyDlPowerControlMode       WmanIf2TcPwrCntlMode}

wmanIf2BsCmnPhyBsEIRP OBJECT-TYPE
        SYNTAX      Integer32 (-32768..32767)
        UNITS       "dBm"
        MAX-ACCESS  read-write
        STATUS      current
        DESCRIPTION
            "The EIRP is the equivalent isotropic radiated power of
             the base station, which is computed for a simple
             single-antenna transmitter."
        ::= { wmanIf2BsCmnPhyDownlinkChannelEntry 1 }

wmanIf2BsCmnPhyChannelNumber OBJECT-TYPE
        SYNTAX      WmanIf2TcChannelNumber
        MAX-ACCESS  read-write
        STATUS      current
        DESCRIPTION
            "Downlink channel number as defined in 8.5.
             Used for license-exempt operation only."
        ::= { wmanIf2BsCmnPhyDownlinkChannelEntry 2 }

wmanIf2BsCmnPhyMaxEirp OBJECT-TYPE
        SYNTAX      Integer32 (-32768..32767)
        UNITS       "dBm"
        MAX-ACCESS  read-write
        STATUS      current
        DESCRIPTION
            "Initial Ranging Max. equivalent isotropic received power
```



```
             at BS Signed in units of 1 dBm."
        ::= { wmanIf2BsCmnPhyDownlinkChannelEntry 3 }

wmanIf2BsCmnPhyDownlinkCenterFreq OBJECT-TYPE
        SYNTAX      Unsigned32
        UNITS       "kHz"
        MAX-ACCESS  read-write
        STATUS      current
        DESCRIPTION
            "Downlink center frequency (kHz)."
        ::= { wmanIf2BsCmnPhyDownlinkChannelEntry 4 }

wmanIf2BsCmnPhyBsId OBJECT-TYPE
        SYNTAX      WmanIf2TcBsIdType
        MAX-ACCESS  read-write
        STATUS      current
        DESCRIPTION
            "Base station ID."
        ::= { wmanIf2BsCmnPhyDownlinkChannelEntry 5 }

wmanIf2BsCmnPhyMacVersion OBJECT-TYPE
        SYNTAX      WmanIf2TcMacVersion
        MAX-ACCESS  read-write
        STATUS      current
        DESCRIPTION
            "This parameter specifies the version of 802.16 to which
             the message originator conforms."
        ::= { wmanIf2BsCmnPhyDownlinkChannelEntry 6 }

wmanIf2BsCmnPhyCyclicPrefix OBJECT-TYPE
        SYNTAX      WmanIf2TcOfdmaCp
        MAX-ACCESS  read-write
        STATUS      current
        DESCRIPTION
            "The ratio of CP time to 'useful' time.Values
             are 1/4, 1/8, 1/16 or 1/32."
        DEFVAL      { oneForth }
        ::= { wmanIf2BsCmnPhyDownlinkChannelEntry 7 }

wmanIf2BsCmnPhyDlRadioResource OBJECT-TYPE
        SYNTAX      Integer32 (0 .. 100)
        UNITS       "%"
        MAX-ACCESS  read-write
        STATUS      current
        DESCRIPTION
            "Indicates the average percentage ratio of non-assigned DL
             radio resources to the total usable DL radio resources."
        REFERENCE
            "Table 574"
        ::= { wmanIf2BsCmnPhyDownlinkChannelEntry 8 }

wmanIf2BsCmnPhyHysteresisMargin OBJECT-TYPE
        SYNTAX      Integer32
        UNITS       "dB"
```

```
        MAX-ACCESS  read-write
        STATUS      current
        DESCRIPTION
            "When the CINR of a neighbor BS is larger than the sum of
             the CINR of the current serving BS and the hysteresis
             margin for the time-to-trigger duration, then the neighbor
             BS is included in the list of possible target BSs in
             MOB_MSHO-REQ."
        REFERENCE
            "Table 574"
        ::= { wmanIf2BsCmnPhyDownlinkChannelEntry 9 }

wmanIf2BsCmnPhyTimeToTriggerDuration OBJECT-TYPE
        SYNTAX      Integer32
        UNITS       "frames"
        MAX-ACCESS  read-write
        STATUS      current
        DESCRIPTION
            "This object indicates the duration the MS needs to decide
             the selection of a neighbor BS as a possible target BS. It
             is applicable only for HO."
        REFERENCE
            "Table 574"
        ::= { wmanIf2BsCmnPhyDownlinkChannelEntry 10 }

wmanIf2BsCmnPhyMihCapability OBJECT-TYPE
        SYNTAX      WmanIf2TcMihCapability
        MAX-ACCESS  read-write
        STATUS      current
        DESCRIPTION
            "This object indicates the IEEE 802.21 Media Independent
             Handover Services capability of the BS."
        REFERENCE
            "Table 574"
        ::= { wmanIf2BsCmnPhyDownlinkChannelEntry 11 }

wmanIf2BsCmnPhyNspChangeCount OBJECT-TYPE
        SYNTAX      Integer32 (0 .. 15)
        MAX-ACCESS  read-write
        STATUS      current
        DESCRIPTION
            "This object tracks the change of NSP List and/or Verbose
             NSP Name List. Inclusion of the NSP Change Count is only
             required if the base station transmits NSP List TLV in any
             SBC-RSP or SII-ADV message."
        REFERENCE
            "Table 574"
        ::= { wmanIf2BsCmnPhyDownlinkChannelEntry 12 }

wmanIf2BsCmnPhyCellType OBJECT-TYPE
        SYNTAX      WmanIf2TcCellType
        MAX-ACCESS  read-write
        STATUS      current
        DESCRIPTION
```



```
            "This object defines BS classes to be used by the MS in the
             network for cell selection and re-selection."
        REFERENCE
            "Table 574"
        ::= { wmanIf2BsCmnPhyDownlinkChannelEntry 13 }

wmanIf2BsCmnPhyBsRestartCount OBJECT-TYPE
        SYNTAX      Integer32 (0 .. 255)
        MAX-ACCESS  read-only
        STATUS      current
        DESCRIPTION
            "The value is incremented by one whenever BS restarts
             (see 6.3.9.11). The value rolls over from 0 to 255."
        REFERENCE
            "Table 574"
        ::= { wmanIf2BsCmnPhyDownlinkChannelEntry 14 }

wmanIf2BsCmnPhyDlConfigChangeCount OBJECT-TYPE
        SYNTAX      Integer32
        MAX-ACCESS  read-only
        STATUS      current
        DESCRIPTION
            "This represents the BS current DCD configuration
             change count."
        ::= { wmanIf2BsCmnPhyDownlinkChannelEntry 15 }

wmanIf2BsCmnPhyDlPowerControlMode OBJECT-TYPE
        SYNTAX      WmanIf2TcPwrCntlMode
        MAX-ACCESS  read-only
        STATUS      current
        DESCRIPTION
            "This object defines the Power control mode change parameter
             that BS will send to MS in PCM_RSP message in OFDM and
             OFDMA PHY modes."
        ::= { wmanIf2BsCmnPhyDownlinkChannelEntry 16 }

wmanIf2BsCmnPhyMbsZoneIdTable OBJECT-TYPE
        SYNTAX      SEQUENCE OF WmanIf2BsCmnPhyMbsZoneIdEntry
        MAX-ACCESS  not-accessible
        STATUS      current
        DESCRIPTION
            "This table contains the MBS zone identifier list"
        REFERENCE
            "Table 574"
        ::= { wmanIf2BsCmnPhy 3 }

wmanIf2BsCmnPhyMbsZoneIdEntry OBJECT-TYPE
        SYNTAX      WmanIf2BsCmnPhyMbsZoneIdEntry
        MAX-ACCESS  not-accessible
        STATUS      current
        DESCRIPTION
             ""
        INDEX     { ifIndex,
                    wmanIf2BsCmnPhyMbsZoneIdIndex }
```

```
        ::= { wmanIf2BsCmnPhyMbsZoneIdTable 1 }

WmanIf2BsCmnPhyMbsZoneIdEntry ::= SEQUENCE {
        wmanIf2BsCmnPhyMbsZoneIdIndex           Integer32,
        wmanIf2BsCmnPhyMbsZoneIdentifier        WmanIf2MbsZoneId}

wmanIf2BsCmnPhyMbsZoneIdIndex OBJECT-TYPE
        SYNTAX      Integer32 (0 .. 127)
        MAX-ACCESS  not-accessible
        STATUS      current
        DESCRIPTION
            "Index to MBS Zone Identifier list."
        ::= { wmanIf2BsCmnPhyMbsZoneIdEntry 1 }

wmanIf2BsCmnPhyMbsZoneIdentifier OBJECT-TYPE
        SYNTAX      WmanIf2MbsZoneId
        MAX-ACCESS  read-write
        STATUS      current
        DESCRIPTION
            "This object defines all MBS zone identifiers with which
             BS is associated."
        ::= { wmanIf2BsCmnPhyMbsZoneIdEntry 2 }

--
-- BS OFDM PHY objects
--
wmanIf2BsOfdmPhy OBJECT IDENTIFIER ::= { wmanIf2BsPhy 2 }

wmanIf2BsOfdmUplinkChannelTable OBJECT-TYPE
        SYNTAX      SEQUENCE OF WmanIf2BsOfdmUplinkChannelEntry
        MAX-ACCESS  not-accessible
        STATUS      current
        DESCRIPTION
            "This table contains UCD channel attributes, defining the
             transmission characteristics of uplink channels"
        REFERENCE
            "Table 569"
        ::= { wmanIf2BsOfdmPhy 1 }

wmanIf2BsOfdmUplinkChannelEntry OBJECT-TYPE
        SYNTAX      WmanIf2BsOfdmUplinkChannelEntry
        MAX-ACCESS  not-accessible
        STATUS      current
        DESCRIPTION
             "This table provides one row for each uplink channel of
              multi-sector BS. An entry in this table exists for each
              ifEntry of BS with an ifType of ieee80216WMAN."
        INDEX     { ifIndex }
        ::= { wmanIf2BsOfdmUplinkChannelTable 1 }

WmanIf2BsOfdmUplinkChannelEntry ::= SEQUENCE {
        wmanIf2BsOfdmNumSubChReqRegionFull      Integer32,
        wmanIf2BsOfdmNumSymbolsReqRegionFull    Integer32,
        wmanIf2BsOfdmSubChFocusCtCode           Integer32,
```



```
        wmanIf2BsOfdmSubChInitRngCapableBs      Integer32,
        wmanIf2BsOfdmContentionRngReqOppSize    Integer32,
        wmanIf2BsOfdmContentionRngReqBurstSize  Integer32}

wmanIf2BsOfdmNumSubChReqRegionFull OBJECT-TYPE
        SYNTAX      INTEGER {oneSubchannel(0),
                             twoSubchannels(1),
                             fourSubchannels(2),
                             eightSubchannels(3),
                             sixteenSubchannels(4)}
        MAX-ACCESS  read-write
        STATUS      current
        DESCRIPTION
            "Bit 0..2 of Subchannelization REQ Region-Full Parameter.
             Number of subchannels used by each transmit opportunity
             when REQ Region-Full is allocated in subchannelization
             region."
        ::= { wmanIf2BsOfdmUplinkChannelEntry 1 }

wmanIf2BsOfdmNumSymbolsReqRegionFull OBJECT-TYPE
        SYNTAX      Integer32 (0 .. 31)
        MAX-ACCESS  read-write
        STATUS      current
        DESCRIPTION
            "Bit 3..7 of Subchannelization REQ Region-Full Parameter.
             Number of OFDM symbols used by each transmit
             opportunity when REQ Region-Full is allocated in
             subchannelization region."
        ::= { wmanIf2BsOfdmUplinkChannelEntry 2 }

wmanIf2BsOfdmSubChFocusCtCode OBJECT-TYPE
        SYNTAX      Integer32 (0 .. 8)
        MAX-ACCESS  read-write
        STATUS      current
        DESCRIPTION
            "Number of contention codes (CSE) that shall only be used to
             request a subchannelized allocation. Default value 0.
             Allowed values 0-8."
        DEFVAL      { 0 }
        ::= { wmanIf2BsOfdmUplinkChannelEntry 3 }

wmanIf2BsOfdmSubChInitRngCapableBs OBJECT-TYPE
        SYNTAX      Integer32 (0 .. 1)
        MAX-ACCESS  read-write
        STATUS      current
        DESCRIPTION
           "Indicator that the BS is capable of receipt of subchannelized
             initial ranging requests.
               '0' - not capable
               '1' - capable"
        DEFVAL      { 0 }
        ::= { wmanIf2BsOfdmUplinkChannelEntry 4 }

wmanIf2BsOfdmContentionRngReqOppSize OBJECT-TYPE
```

```
        SYNTAX      Integer32 (0 .. 65535)
        UNITS       "PS"
        MAX-ACCESS  read-write
        STATUS      current
        DESCRIPTION
            "Size of the transmission opportunity that an SS may use to
             transmit a RNG-REQ message in a contention ranging request
             opportunity."
        ::= { wmanIf2BsOfdmUplinkChannelEntry 5 }

wmanIf2BsOfdmContentionRngReqBurstSize OBJECT-TYPE
        SYNTAX      Integer32 (0 .. 65535)
        UNITS       "OFDM symbols"
        MAX-ACCESS  read-write
        STATUS      current
        DESCRIPTION
            "Size of PHY bursts that an SS shall use to transmit a
             RNG-REQ message in a contention ranging request
             opportunity."
        DEFVAL      { 4 }
        ::= { wmanIf2BsOfdmUplinkChannelEntry 6 }

wmanIf2BsOfdmDownlinkChannelTable OBJECT-TYPE
        SYNTAX      SEQUENCE OF WmanIf2BsOfdmDownlinkChannelEntry
        MAX-ACCESS  not-accessible
        STATUS      current
        DESCRIPTION
            "This table contains DCD channel attributes, defining the
             transmission characteristics of downlink channels"
        REFERENCE
            "Table 574"
        ::= { wmanIf2BsOfdmPhy 2 }

wmanIf2BsOfdmDownlinkChannelEntry OBJECT-TYPE
        SYNTAX      WmanIf2BsOfdmDownlinkChannelEntry
        MAX-ACCESS  not-accessible
        STATUS      current
        DESCRIPTION
            "This table provides one row for each downlink channel of
             multi-sector BS. An entry in this table exists for each
             ifEntry of BS with an ifType of ieee80216WMAN."
        INDEX     { ifIndex }
        ::= { wmanIf2BsOfdmDownlinkChannelTable 1 }

WmanIf2BsOfdmDownlinkChannelEntry ::= SEQUENCE {
        wmanIf2BsOfdmFrameDurationCode          WmanIf2OfdmFrame,
        wmanIf2BsOfdmNoiseInterference          Integer32}

wmanIf2BsOfdmFrameDurationCode OBJECT-TYPE
        SYNTAX      WmanIf2OfdmFrame
        MAX-ACCESS  read-write
        STATUS      current
        DESCRIPTION
            "The duration of the frame."
```



```
        REFERENCE
            "Table 269 and 574"
        ::= { wmanIf2BsOfdmDownlinkChannelEntry 1 }

wmanIf2BsOfdmNoiseInterference OBJECT-TYPE
        SYNTAX      Integer32 (0 .. 255)
        MAX-ACCESS  read-write
        STATUS      current
        DESCRIPTION
            "This object indicates the N+I (Noise + Interference) that
             will be defined by the operator based on the related RF
             system design calculations."
        REFERENCE
            "Table 574"
        ::= { wmanIf2BsOfdmDownlinkChannelEntry 2 }

wmanIf2BsOfdmUcdBurstProfileTable OBJECT-TYPE
        SYNTAX      SEQUENCE OF WmanIf2BsOfdmUcdBurstProfileEntry
        MAX-ACCESS  not-accessible
        STATUS      current
        DESCRIPTION
            "This table contains UCD burst profiles for each uplink
             channel"
        REFERENCE
            "Table 572"
        ::= { wmanIf2BsOfdmPhy 3 }

wmanIf2BsOfdmUcdBurstProfileEntry OBJECT-TYPE
        SYNTAX      WmanIf2BsOfdmUcdBurstProfileEntry
        MAX-ACCESS  not-accessible
        STATUS      current
        DESCRIPTION
            "This table provides one row for each UCD burst profile."
        INDEX     { ifIndex, wmanIf2BsOfdmUiucIndex }
        ::= { wmanIf2BsOfdmUcdBurstProfileTable 1 }

WmanIf2BsOfdmUcdBurstProfileEntry ::= SEQUENCE {
        wmanIf2BsOfdmUiucIndex                  Integer32,
        wmanIf2BsOfdmUcdFecCodeType             WmanIf2OfdmFecCodeType,
        wmanIf2BsOfdmFocusCtPowerBoost          Integer32,
        wmanIf2BsOfdmUcdTcsEnable               Integer32,
        wmanIf2BsOfdmUcdBurstProfileRowStatus   RowStatus}

wmanIf2BsOfdmUiucIndex OBJECT-TYPE
        SYNTAX      Integer32 (5 .. 12)
        MAX-ACCESS  not-accessible
        STATUS      current
        DESCRIPTION
            "The Uplink Interval Usage Code indicates the uplink burst
             profile in the UCD message."
        REFERENCE
            "Subclause 8.3.6.3.1, Table 284"
        ::= { wmanIf2BsOfdmUcdBurstProfileEntry 1 }
```

```
wmanIf2BsOfdmUcdFecCodeType OBJECT-TYPE
        SYNTAX      WmanIf2OfdmFecCodeType
        MAX-ACCESS  read-create
        STATUS      current
        DESCRIPTION
            "Uplink FEC code type and modulation type"
        REFERENCE
            "Table 572"
        ::= { wmanIf2BsOfdmUcdBurstProfileEntry 2 }

wmanIf2BsOfdmFocusCtPowerBoost OBJECT-TYPE
        SYNTAX      Integer32 (0 .. 255)
        MAX-ACCESS  read-create
        STATUS      current
        DESCRIPTION
            "The power boost in dB of focused contention carriers."
        REFERENCE
            "Table 572"
        ::= { wmanIf2BsOfdmUcdBurstProfileEntry 3 }

wmanIf2BsOfdmUcdTcsEnable OBJECT-TYPE
        SYNTAX      INTEGER {tcsDisabled(0),
                             tcsEnabled(1)}
        MAX-ACCESS  read-create
        STATUS      current
        DESCRIPTION
            "This parameter determines the transmission convergence
             sublayer, as described in 8.1.4.3, can be enabled on a
             per-burst basis for both uplink and downlink. through
             DIUC/UIUC messages."
        REFERENCE
            "Table 572"
        ::= { wmanIf2BsOfdmUcdBurstProfileEntry 4 }

wmanIf2BsOfdmUcdBurstProfileRowStatus OBJECT-TYPE
        SYNTAX      RowStatus
        MAX-ACCESS  read-create
        STATUS      current
        DESCRIPTION
            "This object is used to create a new row or modify or
             delete an existing row in this table.

             If the implementator of this MIB has choosen not
             to implement 'dynamic assignment' of profiles, this
             object is not useful and should return noSuchName
             upon SNMP request."
        ::= { wmanIf2BsOfdmUcdBurstProfileEntry 5 }

wmanIf2BsOfdmDcdBurstProfileTable OBJECT-TYPE
        SYNTAX      SEQUENCE OF WmanIf2BsOfdmDcdBurstProfileEntry
        MAX-ACCESS  not-accessible
        STATUS      current
        DESCRIPTION
            "This table provides one row for each DCD burst profile."
```



```
        REFERENCE
            "Table 579"
        ::= { wmanIf2BsOfdmPhy 4 }

wmanIf2BsOfdmDcdBurstProfileEntry OBJECT-TYPE
        SYNTAX      WmanIf2BsOfdmDcdBurstProfileEntry
        MAX-ACCESS  not-accessible
        STATUS      current
        DESCRIPTION
            "This table provides one row for each DCD burst profile."
        INDEX     { ifIndex, wmanIf2BsOfdmDiucIndex }
        ::= { wmanIf2BsOfdmDcdBurstProfileTable 1 }

WmanIf2BsOfdmDcdBurstProfileEntry ::= SEQUENCE {
        wmanIf2BsOfdmDiucIndex                  Integer32,
        wmanIf2BsOfdmDcdFecCodeType             WmanIf2OfdmFecCodeType,
        wmanIf2BsOfdmTcsEnable                  Integer32,
        wmanIf2BsOfdmDcdBurstProfileRowStatus   RowStatus}

wmanIf2BsOfdmDiucIndex OBJECT-TYPE
        SYNTAX      Integer32 (1 .. 11)
        MAX-ACCESS  not-accessible
        STATUS      current
        DESCRIPTION
            "The Downlink Interval Usage Code indicates the downlink
             burst profile in the DCD message."
        REFERENCE
            "Subclause 8.3.6.2.1, Table 274"
        ::= { wmanIf2BsOfdmDcdBurstProfileEntry 1 }

wmanIf2BsOfdmDcdFecCodeType OBJECT-TYPE
        SYNTAX      WmanIf2OfdmFecCodeType
        MAX-ACCESS  read-create
        STATUS      current
        DESCRIPTION
            "Downlink FEC code type and modulation type"
        REFERENCE
            "Table 579"
        ::= { wmanIf2BsOfdmDcdBurstProfileEntry 2 }

wmanIf2BsOfdmTcsEnable OBJECT-TYPE
        SYNTAX      INTEGER {tcsDisabled (0),
                             tcsEnabled (1)}
        MAX-ACCESS  read-create
        STATUS      current
        DESCRIPTION
            "Indicates whether Transmission COnvergence Sublayer
             is enabled or disabled."
        REFERENCE
            "Table 579"
        ::= { wmanIf2BsOfdmDcdBurstProfileEntry 3 }

wmanIf2BsOfdmDcdBurstProfileRowStatus OBJECT-TYPE
        SYNTAX      RowStatus
```

```
        MAX-ACCESS  read-create
        STATUS      current
        DESCRIPTION
            "This object is used to create a new row or modify or
             delete an existing row in this table.

             If the implementator of this MIB has choosen not
             to implement 'dynamic assignment' of profiles, this
             object is not useful and should return noSuchName
             upon SNMP request."
        ::= { wmanIf2BsOfdmDcdBurstProfileEntry 4 }

--
-- BS OFDMA PHY objects
--
wmanIf2BsOfdmaPhy OBJECT IDENTIFIER ::= { wmanIf2BsPhy 3 }

wmanIf2BsOfdmaUplinkChannelTable OBJECT-TYPE
        SYNTAX      SEQUENCE OF WmanIf2BsOfdmaUplinkChannelEntry
        MAX-ACCESS  not-accessible
        STATUS      current
        DESCRIPTION
            "This table contains UCD channel attributes, defining the
             transmission characteristics of uplink channels"
        REFERENCE
            "Table 570"
        ::= { wmanIf2BsOfdmaPhy 1 }

wmanIf2BsOfdmaUplinkChannelEntry OBJECT-TYPE
        SYNTAX      WmanIf2BsOfdmaUplinkChannelEntry
        MAX-ACCESS  not-accessible
        STATUS      current
        DESCRIPTION
            "This table provides one row for each uplink channel of
             multi-sector BS. An entry in this table exists for each
             ifEntry of BS with an ifType of ieee80216WMAN."
        INDEX     { ifIndex }
        ::= { wmanIf2BsOfdmaUplinkChannelTable 1 }

WmanIf2BsOfdmaUplinkChannelEntry ::= SEQUENCE {
        wmanIf2BsOfdmaUlAmcAlloPhyBandsBitmap   OCTET STRING,
        wmanIf2BsOfdmaInitRngCodes              Integer32,
        wmanIf2BsOfdmaPeriodicRngCodes          Integer32,
        wmanIf2BsOfdmaBWReqCodes                Integer32,
        wmanIf2BsOfdmaPeriodRngBackoffStart     Integer32,
        wmanIf2BsOfdmaPeriodRngBackoffEnd       Integer32,
        wmanIf2BsOfdmaStartOfRngCodes           Integer32,
        wmanIf2BsOfdmaPermutationBase           Integer32,
        wmanIf2BsOfdmaULAllocSubchBitmap        OCTET STRING,
        wmanIf2BsOfdmaOptPermULAllocSubchBitmap OCTET STRING,
        wmanIf2BsOfdmaBandAMCAllocThreshold     Integer32,
        wmanIf2BsOfdmaBandAMCReleaseThreshold   Integer32,
        wmanIf2BsOfdmaBandAMCAllocTimer         Integer32,
        wmanIf2BsOfdmaBandAMCReleaseTimer       Integer32,
```



```
        wmanIf2BsOfdmaBandStatRepMAXPeriod      Integer32,
        wmanIf2BsOfdmaBandAMCRetryTimer         Integer32,
        wmanIf2BsOfdmaSafetyChAllocThreshold    Integer32,
        wmanIf2BsOfdmaSafetyChReleaseThreshold  Integer32,
        wmanIf2BsOfdmaSafetyChAllocTimer        Integer32,
        wmanIf2BsOfdmaSafetyChReleaseTimer      Integer32,
        wmanIf2BsOfdmaBinStatusReportMaxPeriod  Integer32,
        wmanIf2BsOfdmaSafetyChRetryTimer        Integer32,
        wmanIf2BsOfdmaHARQAckDelayDLBurst       WmanIf2TcHarqAckDelay,
        wmanIf2BsOfdmaCqichBandAmcTransDelay    Integer32,
        wmanIf2BsOfdmaMaxRetransmission         Integer32,
        wmanIf2BsOfdmaNormalizedCnOverride      OCTET STRING,
        wmanIf2BsOfdmaSizeOfCqichId             Integer32,
        wmanIf2BsOfdmaNormalizedCnValue         Integer32,
        wmanIf2BsOfdmaNormalizedCnOverride2     OCTET STRING,
        wmanIf2BsOfdmaBandAmcEntryAvgCinr       Integer32,
        wmanIf2BsOfdmaAasPreambleUpperBond      Integer32,
        wmanIf2BsOfdmaAasPreambleLowerBond      Integer32,
        wmanIf2BsOfdmaAasBeamSelectAllowed      WmanIf2TcAasBeamSel,
        wmanIf2BsOfdmaCqichIndicationFlag       OCTET STRING,
        wmanIf2BsOfdmaMsUpPowerAdjStep          Unsigned32,
        wmanIf2BsOfdmaMsDownPowerAdjStep        Unsigned32,
        wmanIf2BsOfdmaMinPowerOffsetAdj         Integer32,
        wmanIf2BsOfdmaMaxPowerOffsetAdj         Integer32,
        wmanIf2BsOfdmaHandoverRangingCodes      Integer32,
        wmanIf2BsOfdmaInitialRangingInterval    Unsigned32,
        wmanIf2BsOfdmaTxPowerReport             WmanIf2TcTxPowerReport,
        wmanIf2BsOfdmaNormalizedCnChSounding    Integer32,
        wmanIf2BsOfdmaInitialRngBackoffStart    Integer32,
        wmanIf2BsOfdmaInitialRngBackoffEnd      Integer32,
        wmanIf2BsOfdmaBwRequestBackoffStart     Integer32,
        wmanIf2BsOfdmaBwRequestBackoffEnd       Integer32,
        wmanIf2BsOfdmaUlPuscSubChRotation       Integer32,
        wmanIf2BsOfdmaRelPwrOffetUlHarqBurst    Integer32,
        wmanIf2BsOfdmaRelPwrOffetUlMacMgmtBurst Unsigned32,
        wmanIf2BsOfdmaUlInitialTxTiming         Integer32,
        wmanIf2BsOfdmaUlPhyModeId               WmanIf2TcUlPhyModeId,
        wmanIf2BsOfdmaFastFeedbackRegion        WmanIf2TcFastFeedback,
        wmanIf2BsOfdmaHarqAckRegion             WmanIf2TcHarqAckRegion,
        wmanIf2BsOfdmaRangingRegion             WmanIf2TcRangingRegion,
        wmanIf2BsOfdmaSoundingRegion            WmanIf2TcSoundingRegion,
        wmanIf2BsOfdmaMsTxPowerLimit            Unsigned32,
        wmanIf2BsOfdmaHfddGroupSwitchDelay      Integer32,
        wmanIf2BsOfdmaFrameOffset               WmanIf2TcFrameOffset,
        wmanIf2BsOfdmaNumOfPowerControlBits     WmanIf2TcPwrCntlBits}

wmanIf2BsOfdmaUlAmcAlloPhyBandsBitmap OBJECT-TYPE
        SYNTAX      OCTET STRING (SIZE (6))
        MAX-ACCESS  read-write
        STATUS      current
        DESCRIPTION
            "A bitmap describing the physical bands allocated to the
             segment in the UL, when using the optional AMC permutation
             with regular MAPs (see 8.4.6.3). The LSB of the first byte
```

```
             shall correspond to the physical band 0. For any bit that
             is not set, the corresponding physical bands shall not be
             used by the SS on that segment. When this TLV is not
             present, BS may allocate any physical bands to an SS."
        ::= { wmanIf2BsOfdmaUplinkChannelEntry 1 }

wmanIf2BsOfdmaInitRngCodes OBJECT-TYPE
        SYNTAX      Integer32 (0 .. 255)
        MAX-ACCESS  read-write
        STATUS      current
        DESCRIPTION
            "Number of initial ranging CDMA codes."
        DEFVAL      { 30 }
        ::= { wmanIf2BsOfdmaUplinkChannelEntry 2 }

wmanIf2BsOfdmaPeriodicRngCodes OBJECT-TYPE
        SYNTAX      Integer32 (0 .. 255)
        MAX-ACCESS  read-write
        STATUS      current
        DESCRIPTION
            "Number of periodic ranging CDMA codes."
        DEFVAL     { 30 }
        ::= { wmanIf2BsOfdmaUplinkChannelEntry 3 }

wmanIf2BsOfdmaBWReqCodes OBJECT-TYPE
        SYNTAX      Integer32 (0..255)
        MAX-ACCESS  read-write
        STATUS      current
        DESCRIPTION
            "Number of bandwidth request codes."
        DEFVAL     { 30 }
        ::= { wmanIf2BsOfdmaUplinkChannelEntry 4 }

wmanIf2BsOfdmaPeriodRngBackoffStart OBJECT-TYPE
        SYNTAX      Integer32 (0 .. 15)
        MAX-ACCESS read-write
        STATUS      current
        DESCRIPTION
            "Initial backoff window size for periodic ranging contention
             , expressed as a power of 2."
        DEFVAL     { 0 }
        ::= { wmanIf2BsOfdmaUplinkChannelEntry 5 }

wmanIf2BsOfdmaPeriodRngBackoffEnd OBJECT-TYPE
        SYNTAX      Integer32 (0 .. 15)
        MAX-ACCESS  read-write
        STATUS      current
        DESCRIPTION
            "Final backoff window size for periodic ranging contention,
             expressed as a power of 2."
        DEFVAL     { 15 }
        ::= { wmanIf2BsOfdmaUplinkChannelEntry 6 }

wmanIf2BsOfdmaStartOfRngCodes OBJECT-TYPE
```



```
        SYNTAX      Integer32 (0 .. 255)
        MAX-ACCESS  read-write
        STATUS      current
        DESCRIPTION
            "Indicates the starting number, S, of the group of codes
             used for this uplink.All the ranging codes used on this
             uplink will be between S and ((S+N+M+L) mod 256). Where,
               N: the number of initial-ranging codes
               M: the number of periodic-ranging codes
               L: the number of bandwidth-request codes
               O: the number of handover-ranging codes"
        DEFVAL     { 0 }
        ::= { wmanIf2BsOfdmaUplinkChannelEntry 7 }

wmanIf2BsOfdmaPermutationBase OBJECT-TYPE
        SYNTAX      Integer32 (0 .. 127)
        MAX-ACCESS  read-write
        STATUS      current
        DESCRIPTION
            "Determines the UL_PermBase parameter for the subcarrier
             permutation to be used on this uplink channel.
                 UL_PermBase = 7 LSBs of Permutation base."
        DEFVAL     { 0 }
        ::= { wmanIf2BsOfdmaUplinkChannelEntry 8 }

wmanIf2BsOfdmaULAllocSubchBitmap OBJECT-TYPE
        SYNTAX      OCTET STRING (SIZE (9))
        MAX-ACCESS  read-write
        STATUS      current
        DESCRIPTION
            "This is a bitmap describing the physical sub-channels
             allocated to the segment in the UL, when using the uplink
             PUSC permutation. The LSB of the first byte shall corrspond
             to subchannel 0. For any bit that is not set, the
             corresponding subchannel shall not be used by the SS on
             that segment"
        ::= { wmanIf2BsOfdmaUplinkChannelEntry 9 }

wmanIf2BsOfdmaOptPermULAllocSubchBitmap OBJECT-TYPE
        SYNTAX      OCTET STRING (SIZE (13))
        MAX-ACCESS  read-write
        STATUS      current
        DESCRIPTION
            "This is a bitmap describing the sub-channels allocated to
             the segment in the UL, when using the uplink optional PUSC
             permutation. The LSB of the first byte shall correspond to
             subchannel 0. For any bit that is not set, the
             corresponding subchannel shall not be used by the SS on
             that segment. When this TLV is not present, BS may allocate
             any subchannels to an SS."
        REFERENCE
             "Subclause 8.4.6.2.5"
        ::= { wmanIf2BsOfdmaUplinkChannelEntry 10 }
```

```
wmanIf2BsOfdmaBandAMCAllocThreshold OBJECT-TYPE
        SYNTAX      Integer32 (-128 .. 127)
        UNITS       "dB"
        MAX-ACCESS  read-write
        STATUS      current
        DESCRIPTION
            "Threshold of the maximum of the standard deviations of the
             individual bands CINR measurements over time to trigger
             mode transition from normal subchannel to Band AMC"
        ::= { wmanIf2BsOfdmaUplinkChannelEntry 11 }

wmanIf2BsOfdmaBandAMCReleaseThreshold OBJECT-TYPE
        SYNTAX      Integer32 (-128 .. 127)
        UNITS       "dB"
        MAX-ACCESS  read-write
        STATUS      current
        DESCRIPTION
            "Threshold of the maximum of the standard deviations of the
             individual bands CINR measurements over time to trigger
             mode transition from Band AMC to normal subchannel"
        ::= { wmanIf2BsOfdmaUplinkChannelEntry 12 }

wmanIf2BsOfdmaBandAMCAllocTimer OBJECT-TYPE
        SYNTAX      Integer32 (0 .. 255)
        UNITS       "Frames"
        MAX-ACCESS  read-write
        STATUS      current
        DESCRIPTION
            "Minimum required number of frames to measure the average
            and standard deviation for the event of Band AMC triggering"
        ::= { wmanIf2BsOfdmaUplinkChannelEntry 13 }

wmanIf2BsOfdmaBandAMCReleaseTimer OBJECT-TYPE
        SYNTAX      Integer32 (0 .. 255)
        UNITS       "Frame"
        MAX-ACCESS  read-write
        STATUS      current
        DESCRIPTION
            "Minimum required number of frames to measure the average
             and standard deviation for the event triggering from Band
             AMC to normal subchannel"
        ::= { wmanIf2BsOfdmaUplinkChannelEntry 14 }

wmanIf2BsOfdmaBandStatRepMAXPeriod OBJECT-TYPE
        SYNTAX      Integer32 (0 .. 255)
        UNITS       "Frame"
        MAX-ACCESS  read-write
        STATUS      current
        DESCRIPTION
            "Maximum period between refreshing the Band CINR
             measurement by the unsolicited REP-RSP"
        ::= { wmanIf2BsOfdmaUplinkChannelEntry 15 }

wmanIf2BsOfdmaBandAMCRetryTimer OBJECT-TYPE
```



```
        SYNTAX      Integer32 (0 .. 255)
        UNITS       "Frame"
        MAX-ACCESS  read-write
        STATUS      current
        DESCRIPTION
            "Backoff timer between consecutive mode transitions from
             normal subchannel to Band AMC when the previous request
             is failed"
        ::= { wmanIf2BsOfdmaUplinkChannelEntry 16 }

wmanIf2BsOfdmaSafetyChAllocThreshold OBJECT-TYPE
        SYNTAX      Integer32 (-128 .. 127)
        UNITS       "dB"
        MAX-ACCESS  read-write
        STATUS      current
        DESCRIPTION
            "Safety channel allocation threshold."
        ::= { wmanIf2BsOfdmaUplinkChannelEntry 17 }

wmanIf2BsOfdmaSafetyChReleaseThreshold OBJECT-TYPE
        SYNTAX      Integer32 (-128 .. 127)
        UNITS       "dB"
        MAX-ACCESS  read-write
        STATUS      current
        DESCRIPTION
            "Safety channel release threshold."
        ::= { wmanIf2BsOfdmaUplinkChannelEntry 18 }

wmanIf2BsOfdmaSafetyChAllocTimer OBJECT-TYPE
        SYNTAX      Integer32 (0 .. 255)
        UNITS       "Frames"
        MAX-ACCESS  read-write
        STATUS      current
        DESCRIPTION
            "Safety channel allocation Timer."
        ::= { wmanIf2BsOfdmaUplinkChannelEntry 19 }

wmanIf2BsOfdmaSafetyChReleaseTimer OBJECT-TYPE
        SYNTAX      Integer32 (0 .. 255)
        UNITS       "Frames"
        MAX-ACCESS  read-write
        STATUS      current
        DESCRIPTION
            "Safety channel release Timer."
        ::= { wmanIf2BsOfdmaUplinkChannelEntry 20 }

wmanIf2BsOfdmaBinStatusReportMaxPeriod OBJECT-TYPE
        SYNTAX      Integer32 (0 .. 255)
        UNITS       "Frames"
        MAX-ACCESS  read-write
        STATUS      current
        DESCRIPTION
            "Bin Status Reporting MAX Period."
        ::= { wmanIf2BsOfdmaUplinkChannelEntry 21 }
```

```
wmanIf2BsOfdmaSafetyChRetryTimer OBJECT-TYPE
        SYNTAX      Integer32 (0 .. 255)
        UNITS       "Frames"
        MAX-ACCESS  read-write
        STATUS      current
        DESCRIPTION
            "Safety channel retry Timer."
        ::= { wmanIf2BsOfdmaUplinkChannelEntry 22 }

wmanIf2BsOfdmaHARQAckDelayDLBurst OBJECT-TYPE
        SYNTAX      WmanIf2TcHarqAckDelay
        MAX-ACCESS  read-write
        STATUS      current
        DESCRIPTION
            "This object defines the OFDMA H-ARQ ACK delay for DL
             burst."
        ::= { wmanIf2BsOfdmaUplinkChannelEntry 23 }

wmanIf2BsOfdmaCqichBandAmcTransDelay OBJECT-TYPE
        SYNTAX      Integer32 (0 .. 255)
        UNITS       "Frames"
        MAX-ACCESS  read-write
        STATUS      current
        DESCRIPTION
            "CQICH band AMC transition delay."
        DEFVAL      { 4 }
        ::= { wmanIf2BsOfdmaUplinkChannelEntry 24 }

wmanIf2BsOfdmaMaxRetransmission OBJECT-TYPE
        SYNTAX      Integer32 (1 .. 255)
        MAX-ACCESS  read-write
        STATUS      current
        DESCRIPTION
            "Maximum number of retransmission in UL HARQ."
        DEFVAL      { 4 }
        ::= { wmanIf2BsOfdmaUplinkChannelEntry 25 }

wmanIf2BsOfdmaNormalizedCnOverride OBJECT-TYPE
        SYNTAX      OCTET STRING (SIZE (8))
        MAX-ACCESS  read-write
        STATUS      current
        DESCRIPTION
            "This is a list of numbers, where each number is encoded by
             one nibble, and interpreted as a signed integer. The
             nibbles correspond in order to the list define by Table
             334, starting from the second line, such that the LS
             nibble of the first byte corresponds to the second line in
             the table. The number encoded by each nibble represents
             the difference in normalized C/N relative to the previous
             line in the table."
        ::= { wmanIf2BsOfdmaUplinkChannelEntry 26 }

wmanIf2BsOfdmaSizeOfCqichId OBJECT-TYPE
```



```
        SYNTAX      Integer32 (0 .. 7)
        MAX-ACCESS  read-write
        STATUS      current
        DESCRIPTION
            "Size of CQICH ID field.
                 0 = 0 bits
                 1 = 3 bits
                 2 = 4 bits
                 3 = 5 bits
                 4 = 6 bits
                 5 = 7 bits
                 6 = 8 bits
                 7 = 9 bits"
        DEFVAL      { 0 }
        ::= { wmanIf2BsOfdmaUplinkChannelEntry 27 }

wmanIf2BsOfdmaNormalizedCnValue OBJECT-TYPE
        SYNTAX      Integer32 (-128 .. 127)
        UNITS       "dB"
        MAX-ACCESS  read-write
        STATUS      current
        DESCRIPTION
            "It shall be interpreted as signed integer in dB. It
             corresponds to the normalized C/N value in the first line
             (counting except for header cell of table)"
        ::= { wmanIf2BsOfdmaUplinkChannelEntry 28 }

wmanIf2BsOfdmaNormalizedCnOverride2 OBJECT-TYPE
        SYNTAX      OCTET STRING (SIZE (7))
        MAX-ACCESS  read-write
        STATUS      current
        DESCRIPTION
            "This is a list of numbers, where each number is encoded
             by one nibble, and interpreted as a signed integer. The
             nibbles correspond in order to the list define by Table
             334, starting from the second line (counting except for
             the header cell of table), such that the LS nibble of
             the first byte corresponds to the second line in the
             table. The number encoded by each nibble represents the
             difference in normalized C/N relative to the previous
             line in the table."
        ::= { wmanIf2BsOfdmaUplinkChannelEntry 29 }

wmanIf2BsOfdmaBandAmcEntryAvgCinr OBJECT-TYPE
        SYNTAX      Integer32 (-128 .. 127)
        UNITS       "dB"
        MAX-ACCESS  read-write
        STATUS      current
        DESCRIPTION
            "Threshold of the average CINR of the whole bandwidth to
             trigger mode transition from normal subchannel to AMC"
        ::= { wmanIf2BsOfdmaUplinkChannelEntry 30 }

wmanIf2BsOfdmaAasPreambleUpperBond OBJECT-TYPE
```

```
        SYNTAX      Integer32 (-128 .. 127)
        UNITS       "0.25 dB"
        MAX-ACCESS  read-write
        STATUS      current
        DESCRIPTION
            "Upper bound of AAS preamble."
        ::= { wmanIf2BsOfdmaUplinkChannelEntry 31 }

wmanIf2BsOfdmaAasPreambleLowerBond OBJECT-TYPE
        SYNTAX      Integer32 (-128 .. 127)
        UNITS       "0.25 dB"
        MAX-ACCESS  read-write
        STATUS      current
        DESCRIPTION
            "Lower bound of AAS preamble."
        ::= { wmanIf2BsOfdmaUplinkChannelEntry 32 }

wmanIf2BsOfdmaAasBeamSelectAllowed OBJECT-TYPE
        SYNTAX      WmanIf2TcAasBeamSel
        MAX-ACCESS  read-write
        STATUS      current
        DESCRIPTION
            "Indicate whether unsolicited AAS Beam Select messages
             should be sent by the MS."
        DEFVAL      { allowed }
        ::= { wmanIf2BsOfdmaUplinkChannelEntry 33 }

wmanIf2BsOfdmaCqichIndicationFlag OBJECT-TYPE
        SYNTAX      OCTET STRING (SIZE (1))
        MAX-ACCESS  read-write
        STATUS      current
        DESCRIPTION
            "The N MSB values of this field represents the N-bit
             payload value on the Fast-Feedback channel reserved as
             indication flag for MS to initiate feedback on the
             Feedback header, where N is the number of payload bits
             used for S/N measurement feedback on the Fast-Feedback
             channel. The value shall not be set to all zeros."
        ::= { wmanIf2BsOfdmaUplinkChannelEntry 34 }

wmanIf2BsOfdmaMsUpPowerAdjStep OBJECT-TYPE
        SYNTAX      Unsigned32 (0 .. 255)
        UNITS       "0.01 dB"
        MAX-ACCESS  read-write
        STATUS      current
        DESCRIPTION
            "MS-specific up power offset adjustment step"
        ::= { wmanIf2BsOfdmaUplinkChannelEntry 35 }

wmanIf2BsOfdmaMsDownPowerAdjStep OBJECT-TYPE
        SYNTAX      Unsigned32 (0 .. 255)
        UNITS       "0.01 dB"
        MAX-ACCESS  read-write
        STATUS      current
```



```
        DESCRIPTION
            "MS-specific down power offset adjustment step"
        ::= { wmanIf2BsOfdmaUplinkChannelEntry 36 }

wmanIf2BsOfdmaMinPowerOffsetAdj OBJECT-TYPE
        SYNTAX      Integer32 (-128 .. 127)
        UNITS       "0.1 dB"
        MAX-ACCESS  read-write
        STATUS      current
        DESCRIPTION
            "Minimum level of power offset adjustment"
        ::= { wmanIf2BsOfdmaUplinkChannelEntry 37 }

wmanIf2BsOfdmaMaxPowerOffsetAdj OBJECT-TYPE
        SYNTAX      Integer32 (-128 .. 127)
        UNITS       "0.1 dB"
        MAX-ACCESS  read-write
        STATUS      current
        DESCRIPTION
            "Maximum level of power offset adjustment"
        ::= { wmanIf2BsOfdmaUplinkChannelEntry 38 }

wmanIf2BsOfdmaHandoverRangingCodes OBJECT-TYPE
        SYNTAX      Integer32 (0 .. 255)
        MAX-ACCESS  read-write
        STATUS      current
        DESCRIPTION
            "Number of handover ranging CDMA codes"
        ::= { wmanIf2BsOfdmaUplinkChannelEntry 39 }

wmanIf2BsOfdmaInitialRangingInterval OBJECT-TYPE
        SYNTAX      Unsigned32 (0 .. 255)
        UNITS       "frames"
        MAX-ACCESS  read-write
        STATUS      current
        DESCRIPTION
            "Number of frames between initial ranging interval
             allocation."
        ::= { wmanIf2BsOfdmaUplinkChannelEntry 40 }

wmanIf2BsOfdmaTxPowerReport OBJECT-TYPE
        SYNTAX      WmanIf2TcTxPowerReport
        MAX-ACCESS  read-write
        STATUS      current
        DESCRIPTION
            "Tx Power Report."
        ::= { wmanIf2BsOfdmaUplinkChannelEntry 41 }

wmanIf2BsOfdmaNormalizedCnChSounding OBJECT-TYPE
        SYNTAX      Integer32 (-128 .. 127)
        UNITS       "dB"
        MAX-ACCESS  read-write
        STATUS      current
        DESCRIPTION
```

```
            "Signed integer for the required C/N (dB) for Channel
             Sounding."
        ::= { wmanIf2BsOfdmaUplinkChannelEntry 42 }

wmanIf2BsOfdmaInitialRngBackoffStart OBJECT-TYPE
        SYNTAX      Integer32 (0 .. 15)
        MAX-ACCESS  read-write
        STATUS      current
        DESCRIPTION
            "Initial backoff window size for initial ranging
             contention, expressed as a power of 2."
        ::= { wmanIf2BsOfdmaUplinkChannelEntry 43 }

wmanIf2BsOfdmaInitialRngBackoffEnd OBJECT-TYPE
        SYNTAX      Integer32 (0 .. 15)
        MAX-ACCESS  read-write
        STATUS      current
        DESCRIPTION
            "Final backoff window size for initial ranging
             contention, expressed as a power of 2."
        ::= { wmanIf2BsOfdmaUplinkChannelEntry 44 }

wmanIf2BsOfdmaBwRequestBackoffStart OBJECT-TYPE
        SYNTAX      Integer32 (0 .. 15)
        MAX-ACCESS  read-write
        STATUS      current
        DESCRIPTION
            "Initial backoff window size for contention BW requests,
             expressed as a power of 2."
        ::= { wmanIf2BsOfdmaUplinkChannelEntry 45 }

wmanIf2BsOfdmaBwRequestBackoffEnd OBJECT-TYPE
        SYNTAX      Integer32 (0 .. 15)
        MAX-ACCESS  read-write
        STATUS      current
        DESCRIPTION
            "Final backoff window size for contention BW requests,
             expressed as a power of 2."
        ::= { wmanIf2BsOfdmaUplinkChannelEntry 46 }

wmanIf2BsOfdmaUlPuscSubChRotation OBJECT-TYPE
        SYNTAX      Integer32 (0 .. 1)
        MAX-ACCESS  read-write
        STATUS      current
        DESCRIPTION
            "Indicates the default setting of subchannel rotation in the
             UL frame.
               '0' - indicates UL PUSC subchannel rotation is enabled.
               '1' - indicates UL PUSC subchannel rotation is disabled."
        DEFVAL      { 0 }
        ::= { wmanIf2BsOfdmaUplinkChannelEntry 47 }

wmanIf2BsOfdmaRelPwrOffetUlHarqBurst OBJECT-TYPE
        SYNTAX      Integer32 (-8 .. 7)
```



```
        UNITS       "0.5dB"
        MAX-ACCESS  read-write
        STATUS      current
        DESCRIPTION
            "Offset for HARQ burst relative to non-HARQ burst.
             (signed integer in 0.5 dB unit)"
        DEFVAL      { 0 }
        ::= { wmanIf2BsOfdmaUplinkChannelEntry 48 }

wmanIf2BsOfdmaRelPwrOffetUlMacMgmtBurst OBJECT-TYPE
        SYNTAX      Unsigned32 (0 .. 7)
        UNITS       "0.5dB"
        MAX-ACCESS  read-write
        STATUS      current
        DESCRIPTION
            "Power offset for UL burst containing a MAC management
             message relative to the normal traffic burst.
             (unsigned integer in 0.5 dB units)"
        DEFVAL      { 0 }
        ::= { wmanIf2BsOfdmaUplinkChannelEntry 49 }

wmanIf2BsOfdmaUlInitialTxTiming OBJECT-TYPE
        SYNTAX      Integer32 (0 .. 255)
        MAX-ACCESS  read-write
        STATUS      current
        DESCRIPTION
            "0x00: The timing is referenced to the
                  UL_Allocation_Start_Time.
             0x01 - 0xfe: Timing offset in unit of 2 PSs (two physical
                    slots) before 'UL_Allocation_Start_Time' to which
                    the MS timing shall be referenced. If this value is
                    larger than TTG-SSRTG, then MS shall consider this
                    value as 'TTGSSRTG'.
             0xff: The timing is referenced to the
                   UL_Allocation_Start_Time-TTG+SSRTG"
        ::= { wmanIf2BsOfdmaUplinkChannelEntry 50 }

wmanIf2BsOfdmaUlPhyModeId OBJECT-TYPE
        SYNTAX      WmanIf2TcUlPhyModeId
        MAX-ACCESS  read-write
        STATUS      current
        DESCRIPTION
            "Uplink PHY mode ID"
        ::= { wmanIf2BsOfdmaUplinkChannelEntry 51 }

wmanIf2BsOfdmaFastFeedbackRegion OBJECT-TYPE
        SYNTAX      WmanIf2TcFastFeedback
        MAX-ACCESS  read-write
        STATUS      current
        DESCRIPTION
           "Contains same fields as in the FAST FEEDBACK Allocation IE"
        ::= { wmanIf2BsOfdmaUplinkChannelEntry 52 }

wmanIf2BsOfdmaHarqAckRegion OBJECT-TYPE
```

```
        SYNTAX      WmanIf2TcHarqAckRegion
        MAX-ACCESS  read-write
        STATUS      current
        DESCRIPTION
            "HARQ Ack Region"
        ::= { wmanIf2BsOfdmaUplinkChannelEntry 53 }

wmanIf2BsOfdmaRangingRegion OBJECT-TYPE
        SYNTAX      WmanIf2TcRangingRegion
        MAX-ACCESS  read-write
        STATUS      current
        DESCRIPTION
            "Ranging Region"
        ::= { wmanIf2BsOfdmaUplinkChannelEntry 54 }

wmanIf2BsOfdmaSoundingRegion OBJECT-TYPE
        SYNTAX      WmanIf2TcSoundingRegion
        MAX-ACCESS  read-write
        STATUS      current
        DESCRIPTION
            "Sounding Region"
        ::= { wmanIf2BsOfdmaUplinkChannelEntry 55 }

wmanIf2BsOfdmaMsTxPowerLimit OBJECT-TYPE
        SYNTAX      Unsigned32 (0 .. 255)
        UNITS       "dBm"
        MAX-ACCESS  read-write
        STATUS      current
        DESCRIPTION
            "Specifies the maximum allowed MS transmit power. Values
             indicate power levels in 1 dB steps starting from 0 dBm."
        ::= { wmanIf2BsOfdmaUplinkChannelEntry 56 }

wmanIf2BsOfdmaHfddGroupSwitchDelay OBJECT-TYPE
        SYNTAX      Integer32 (1 .. 255)
        UNITS       "Frames"
        MAX-ACCESS  read-write
        STATUS      current
        DESCRIPTION
            "Specifies the delay of H-FDD Group Switching transition."
        REFERENCE
            "Subclause 8.4.4.1.1"
        ::= { wmanIf2BsOfdmaUplinkChannelEntry 57 }

wmanIf2BsOfdmaFrameOffset OBJECT-TYPE
        SYNTAX      WmanIf2TcFrameOffset
        MAX-ACCESS  read-write
        STATUS      current
        DESCRIPTION
            "Specifies the offset between the frame of the CQI channel /
             UL burst and the current frame."
        ::= { wmanIf2BsOfdmaUplinkChannelEntry 58 }

wmanIf2BsOfdmaNumOfPowerControlBits OBJECT-TYPE
```



```
        SYNTAX      WmanIf2TcPwrCntlBits
        MAX-ACCESS  read-write
        STATUS      current
        DESCRIPTION
            "Number of power control command bits Bq and Bd."
        ::= { wmanIf2BsOfdmaUplinkChannelEntry 59 }

wmanIf2BsOfdmaDownlinkChannelTable OBJECT-TYPE
        SYNTAX      SEQUENCE OF WmanIf2BsOfdmaDownlinkChannelEntry
        MAX-ACCESS  not-accessible
        STATUS      current
        DESCRIPTION
            "This table contains DCD channel attributes, defining the
             transmission characteristics of downlink channels"
        REFERENCE
            "Subclause 11.4.1, Table 574"
        ::= { wmanIf2BsOfdmaPhy 2 }

wmanIf2BsOfdmaDownlinkChannelEntry OBJECT-TYPE
        SYNTAX      WmanIf2BsOfdmaDownlinkChannelEntry
        MAX-ACCESS  not-accessible
        STATUS      current
        DESCRIPTION
            "This table provides one row for each downlink channel of
             multi-sector BS. An entry in this table exists for each
             ifEntry of BS with an ifType of ieee80216WMAN."
        INDEX     { ifIndex }
        ::= { wmanIf2BsOfdmaDownlinkChannelTable 1 }

WmanIf2BsOfdmaDownlinkChannelEntry ::= SEQUENCE {
        wmanIf2BsOfdmaFrameDurationCode         WmanIf2TcOfdmaFrame,
        wmanIf2BsOfdmaHARQAckDelayULBurst       WmanIf2TcHarqAckDelay,
        wmanIf2BsOfdmaHarqZonePermutation       WmanIf2TcPermutationTyp,
        wmanIf2BsOfdmaHMaxRetransmission        Integer32,
        wmanIf2BsOfdmaRssiCinrAvgParameter      WmanIf2TcRssiCinrAvg,
        wmanIf2BsOfdmaDlAmcAlloPhyBandsBitmap   OCTET STRING,
        wmanIf2BsOfdmaHandoverSupported         WmanIf2TcHoSupportType,
        wmanIf2BsOfdmaFddDlInterGroupGap        WmanIf2TcFddDlGrpGap,
        wmanIf2BsOfdmaFddPartitionChange        Integer32,
        wmanIf2BsOfdmaThresholdAddBsDivSet      Integer32,
        wmanIf2BsOfdmaThresholdDelBsDivSet      Integer32,
        wmanIf2BsOfdmaAsrSlotLength             Integer32,
        wmanIf2BsOfdmaAsrSwitchingPeriod        Integer32,
        wmanIf2BsOfdmaTtgTtdOrHfddGroup1        Integer32,
        wmanIf2BsOfdmaTtgHfddGroup2             Integer32,
        wmanIf2BsOfdmaRtgTtdOrHfddGroup1        Integer32,
        wmanIf2BsOfdmaRtgHfddGroup2             Integer32,
        wmanIf2BsOfdmaTsuc1ActSubchannelBitmap  OCTET STRING,
        wmanIf2BsOfdmaTsuc2ActSubchannelBitmap  OCTET STRING,
        wmanIf2BsOfdmaCidDescriptor             WmanIf2TcCidDescriptor}

wmanIf2BsOfdmaFrameDurationCode OBJECT-TYPE
        SYNTAX      WmanIf2TcOfdmaFrame
        MAX-ACCESS  read-write
```

```
        STATUS      current
        DESCRIPTION
            "The duration of the frame."
        ::= { wmanIf2BsOfdmaDownlinkChannelEntry 1 }

wmanIf2BsOfdmaHARQAckDelayULBurst OBJECT-TYPE
        SYNTAX      WmanIf2TcHarqAckDelay
        MAX-ACCESS  read-write
        STATUS      current
        DESCRIPTION
            "This object defines the OFDMA H-ARQ ACK delay for UL
             burst."
        ::= { wmanIf2BsOfdmaDownlinkChannelEntry 2 }

wmanIf2BsOfdmaHarqZonePermutation OBJECT-TYPE
        SYNTAX      WmanIf2TcPermutationTyp
        MAX-ACCESS  read-write
        STATUS      current
        DESCRIPTION
            "Permutation type for broadcast region in HARQ zone"
        ::= { wmanIf2BsOfdmaDownlinkChannelEntry 3 }

wmanIf2BsOfdmaHMaxRetransmission OBJECT-TYPE
        SYNTAX      Integer32 (0 .. 255)
        MAX-ACCESS  read-write
        STATUS      current
        DESCRIPTION
            "Maximum number of retransmission in DL HARQ."
        DEFVAL      { 4 }
        ::= { wmanIf2BsOfdmaDownlinkChannelEntry 4 }

wmanIf2BsOfdmaRssiCinrAvgParameter OBJECT-TYPE
        SYNTAX      WmanIf2TcRssiCinrAvg
        MAX-ACCESS  read-write
        STATUS      current
        DESCRIPTION
            "Bit 0..3 of Default RSSI and CINR averaging parameter
             TLV.

             Default averaging parameter Alpha Avg for physical
             CINR measurements, in multiples of 1/16. For example
             '0' means 1/16, 15 means 16/16."
        DEFVAL      { 51 }
        ::= { wmanIf2BsOfdmaDownlinkChannelEntry 5 }

wmanIf2BsOfdmaDlAmcAlloPhyBandsBitmap OBJECT-TYPE
        SYNTAX      OCTET STRING (SIZE (6))
        MAX-ACCESS  read-write
        STATUS      current
        DESCRIPTION
            "A bitmap describing the physical bands allocated to the
             segment in the DL, when allocating AMC subchannels
             through the HARQ MAP, or through the Normal MAP, or for
             Band-AMC CINR reports, or using the optional AMC
```



```
             permutation (see 8.4.6.3). The LSB of the first byte
             shall correspond to band 0. For any bit that is not set,
             the corresponding band shall not be used by the SS on
             that segment. When this TLV is not present, BS may
             allocate any physical bands to an SS."
        ::= { wmanIf2BsOfdmaDownlinkChannelEntry 6 }

wmanIf2BsOfdmaHandoverSupported OBJECT-TYPE
        SYNTAX      WmanIf2TcHoSupportType
        MAX-ACCESS  read-write
        STATUS      current
        DESCRIPTION
            "Indicates the types of handover supported.
             Bit 0 = HO
             Bit 1 = MDHO
             Bit 2 = FBSS HO."
        ::= { wmanIf2BsOfdmaDownlinkChannelEntry 7 }

wmanIf2BsOfdmaFddDlInterGroupGap OBJECT-TYPE
        SYNTAX      WmanIf2TcFddDlGrpGap
        MAX-ACCESS  read-write
        STATUS      current
        DESCRIPTION
            "Indicates the location and the size of inter-group gap
             location."
        ::= { wmanIf2BsOfdmaDownlinkChannelEntry 8 }

wmanIf2BsOfdmaFddPartitionChange OBJECT-TYPE
        SYNTAX      Integer32 (0 .. 255)
        UNITS       "Frames"
        MAX-ACCESS  read-write
        STATUS      current
        DESCRIPTION
            "Indicate minimum number of frames (excluding current frame)
             before next possible change."
        ::= { wmanIf2BsOfdmaDownlinkChannelEntry 9 }

wmanIf2BsOfdmaThresholdAddBsDivSet OBJECT-TYPE
        SYNTAX      Integer32 (0 .. 255)
        UNITS       "dB"
        MAX-ACCESS  read-write
        STATUS      current
        DESCRIPTION
            "Threshold used by the MS to add a neighbor BS to the
             diversity set. When the CINR of a neighbor BS is higher
             than H_Add_Threshold, the MS should send MOB_MSHO-REQ to
             request adding this neighbor BS to the diversity set.
             This threshold is used for the MS that is performing
             MDHO/FBSS HO. If the BS does not support FBSS HO/MDHO,
             this value is not set."
        ::= { wmanIf2BsOfdmaDownlinkChannelEntry 10 }

wmanIf2BsOfdmaThresholdDelBsDivSet OBJECT-TYPE
        SYNTAX      Integer32 (0 .. 255)
```

```
        UNITS       "dB"
        MAX-ACCESS  read-write
        STATUS      current
        DESCRIPTION
            "Threshold used by the MS to delete a neighbor BS to the
             diversity set. When the CINR of a neighbor BS is lower
             than H_Add_Threshold, the MS should send MOB_MSHO-REQ to
             request dropping this neighbor BS to the diversity set.
             This threshold is used for the MS that is performing
             MDHO/FBSS HO. If the BS does not support FBSS HO/MDHO,
             this value is not set."
        ::= { wmanIf2BsOfdmaDownlinkChannelEntry 11 }

wmanIf2BsOfdmaAsrSlotLength OBJECT-TYPE
        SYNTAX      Integer32 (0 .. 15)
        UNITS       "Frames"
        MAX-ACCESS  read-write
        STATUS      current
        DESCRIPTION
            "Bit 0..3 of ASR Slot Length and Switching Period.
             For FBSS operation, the time axis is slotted by an ASR
             (Anchor Switch Reporting) slot that is
             wmanIf2BsOfdmaAsrSlotLength frame long."
        ::= { wmanIf2BsOfdmaDownlinkChannelEntry 12 }

wmanIf2BsOfdmaAsrSwitchingPeriod OBJECT-TYPE
        SYNTAX      Integer32 (0 .. 15)
        UNITS       "ASR slots"
        MAX-ACCESS  read-write
        STATUS      current
        DESCRIPTION
            "Bit 0..3 of ASR Slot Length and Switching Period.
             A switching period is introduced whose duration is equals
             to wmanIf2BsOfdmaAsrSwitchingPeriod ASR slots that
             should be long enough such that certain process (e.g.,
             HARQ transmission, backhaul context transfer) can be
             completed at the current anchor BS before the MS switches
             to the new anchor BS."
        ::= { wmanIf2BsOfdmaDownlinkChannelEntry 13 }

wmanIf2BsOfdmaTtgTtdOrHfddGroup1 OBJECT-TYPE
        SYNTAX      Integer32 (0 .. 65535)
        UNITS       "PS"
        MAX-ACCESS  read-write
        STATUS      current
        DESCRIPTION
            "Transmit / Receive Transition Gap for TDD or HFDD group 1."
        ::= { wmanIf2BsOfdmaDownlinkChannelEntry 14 }

wmanIf2BsOfdmaTtgHfddGroup2 OBJECT-TYPE
        SYNTAX      Integer32 (0 .. 65535)
        UNITS       "PS"
        MAX-ACCESS  read-write
        STATUS      current
```



```
        DESCRIPTION
            "Transmit / Receive Transition Gap for HFDD group 2. For TDD
             , '0' should be returned, when reading this object."
        ::= { wmanIf2BsOfdmaDownlinkChannelEntry 15 }

wmanIf2BsOfdmaRtgTtdOrHfddGroup1 OBJECT-TYPE
        SYNTAX      Integer32 (0 .. 255)
        UNITS       "PS"
        MAX-ACCESS  read-write
        STATUS      current
        DESCRIPTION
            "Receive / Transmit Transition Gap for TDD or HFDD group 1."
        ::= { wmanIf2BsOfdmaDownlinkChannelEntry 16 }

wmanIf2BsOfdmaRtgHfddGroup2 OBJECT-TYPE
        SYNTAX      Integer32 (0 .. 255)
        UNITS       "PS"
        MAX-ACCESS  read-write
        STATUS      current
        DESCRIPTION
            "Receive / Transmit Transition Gap for HFDD group 2. For TDD
             , '0' should be returned, when reading this object."
        ::= { wmanIf2BsOfdmaDownlinkChannelEntry 17 }

wmanIf2BsOfdmaTsuc1ActSubchannelBitmap OBJECT-TYPE
        SYNTAX      OCTET STRING (SIZE (9))
        MAX-ACCESS  read-write
        STATUS      current
        DESCRIPTION
            "This is a bitmap describing the subchannels allocated to
             the segment in the DL, when using the TUSC1 permutation
             (see 8.4.6.1.2.4). The LSB of the least significant byte
             shall correspond to subchannel 0. For any bit that is not
             set, the MS on that segment shall not use the corresponding
             subchannel. The active subchannels are renumbered
             consecutively starting from 0."
        ::= { wmanIf2BsOfdmaDownlinkChannelEntry 18 }

wmanIf2BsOfdmaTsuc2ActSubchannelBitmap OBJECT-TYPE
        SYNTAX      OCTET STRING (SIZE (9))
        MAX-ACCESS  read-write
        STATUS      current
        DESCRIPTION
            "This is a bitmap describing the subchannels allocated to
             the segment in the DL, when using the TUSC2 permutation
             (see 8.4.6.1.2.5). The LSB of the least significant byte
             shall correspond to subchannel 0. For any bit that is not
             set, the MS on that segment shall not use the
             corresponding subchannel. The active subchannels are
             renumbered consecutively starting from 0."
        ::= { wmanIf2BsOfdmaDownlinkChannelEntry 19 }

wmanIf2BsOfdmaCidDescriptor OBJECT-TYPE
        SYNTAX      WmanIf2TcCidDescriptor
```

```
        MAX-ACCESS  read-write
        STATUS      current
        DESCRIPTION
            "DCD TLV Connection identifier descriptor object
             Most significant 11 bits = m (see Table 554)
             Least significant 5 bits = a (number of reserved transport
                                           CIDs per MS)"
        ::= { wmanIf2BsOfdmaDownlinkChannelEntry 20 }

wmanIf2BsOfdmaUcdBurstProfileTable OBJECT-TYPE
        SYNTAX      SEQUENCE OF WmanIf2BsOfdmaUcdBurstProfileEntry
        MAX-ACCESS  not-accessible
        STATUS      current
        DESCRIPTION
            "This table contains UCD burst profiles for each uplink
             channel"
        REFERENCE
            "Table 570"
        ::= { wmanIf2BsOfdmaPhy 3 }

wmanIf2BsOfdmaUcdBurstProfileEntry OBJECT-TYPE
        SYNTAX      WmanIf2BsOfdmaUcdBurstProfileEntry
        MAX-ACCESS  not-accessible
        STATUS      current
        DESCRIPTION
            "This table provides one row for each UCD burst profile."
        INDEX     { ifIndex, wmanIf2BsOfdmaUiucIndex }
        ::= { wmanIf2BsOfdmaUcdBurstProfileTable 1 }

WmanIf2BsOfdmaUcdBurstProfileEntry ::= SEQUENCE {
        wmanIf2BsOfdmaUiucIndex                 Integer32,
        wmanIf2BsOfdmaUcdFecCodeType            WmanIf2OfdmaUcdFecCode,
        wmanIf2BsOfdmaRangingDataRatio          Integer32,
        wmanIf2BsOfdmaUcdBurstProfileRowStatus  RowStatus}

wmanIf2BsOfdmaUiucIndex OBJECT-TYPE
        SYNTAX      Integer32 (1 .. 10)
        MAX-ACCESS not-accessible
        STATUS      current
        DESCRIPTION
            "The Uplink Interval Usage Code indicates the uplink burst
             profile in the UCD message, and is used along with ifIndex
             to identify an entry in the
             wmanIf2BsOfdmaUcdBurstProfileTable."
        REFERENCE
            "Subclause 8.4.5.4.1"
        ::= { wmanIf2BsOfdmaUcdBurstProfileEntry 1 }

wmanIf2BsOfdmaUcdFecCodeType OBJECT-TYPE
        SYNTAX      WmanIf2OfdmaUcdFecCode
        MAX-ACCESS  read-create
        STATUS      current
        DESCRIPTION
            "Uplink FEC code type and modulation type"
```



```
        ::= { wmanIf2BsOfdmaUcdBurstProfileEntry 2 }

wmanIf2BsOfdmaRangingDataRatio OBJECT-TYPE
        SYNTAX      Integer32 (-128 .. 127)
        UNITS       "dB"
        MAX-ACCESS  read-create
        STATUS      current
        DESCRIPTION
            "Reducing factor in units of 1 dB, between the power used
             for this burst and power should be used for CDMA Ranging."
        REFERENCE
        "Subclause 11.3.1.1, Table 573"
        ::= { wmanIf2BsOfdmaUcdBurstProfileEntry 3 }

wmanIf2BsOfdmaUcdBurstProfileRowStatus OBJECT-TYPE
        SYNTAX      RowStatus
        MAX-ACCESS  read-create
        STATUS      current
        DESCRIPTION
            "This object is used to create a new row or modify or delete
             an existing row in this table. If the implementator of this
             MIB has choosen not to implement 'dynamic assignment' of
             profiles, this object is not useful and should return
             noSuchName upon SNMP request."
        ::= { wmanIf2BsOfdmaUcdBurstProfileEntry 5 }

wmanIf2BsOfdmaDcdBurstProfileTable OBJECT-TYPE
        SYNTAX      SEQUENCE OF WmanIf2BsOfdmaDcdBurstProfileEntry
        MAX-ACCESS  not-accessible
        STATUS      current
        DESCRIPTION
            "This table provides one row for each DCD burst profile."
        REFERENCE
            "Table 580"
        ::= { wmanIf2BsOfdmaPhy 4 }

wmanIf2BsOfdmaDcdBurstProfileEntry OBJECT-TYPE
        SYNTAX      WmanIf2BsOfdmaDcdBurstProfileEntry
        MAX-ACCESS  not-accessible
        STATUS      current
        DESCRIPTION
            ""
        INDEX     { ifIndex, wmanIf2BsOfdmaDiucIndex }
        ::= { wmanIf2BsOfdmaDcdBurstProfileTable 1 }

WmanIf2BsOfdmaDcdBurstProfileEntry ::= SEQUENCE {
        wmanIf2BsOfdmaDiucIndex                 Integer32,
        wmanIf2BsOfdmaDcdFecCodeType            WmanIf2OfdmaDcdFecCode,
        wmanIf2BsOfdmaDcdBurstProfileRowStatus  RowStatus}

wmanIf2BsOfdmaDiucIndex OBJECT-TYPE
        SYNTAX      Integer32 (0 .. 12)
        MAX-ACCESS  not-accessible
        STATUS      current
```

```
        DESCRIPTION
            "The Downlink Interval Usage Code indicates the downlink
             burst profile in the DCD message, and is used along with
             ifIndex to identify an entry in the
             wmanIf2BsOfdmaDcdBurstProfileTable."
        REFERENCE
            "Subclause 8.4.5.3.1, Table 320"
        ::= { wmanIf2BsOfdmaDcdBurstProfileEntry 1 }

wmanIf2BsOfdmaDcdFecCodeType OBJECT-TYPE
        SYNTAX      WmanIf2OfdmaDcdFecCode
        MAX-ACCESS  read-create
        STATUS      current
        DESCRIPTION
            "Downlink FEC code type and modulation type"
        REFERENCE
            "Table 580"
        ::= { wmanIf2BsOfdmaDcdBurstProfileEntry 2 }

wmanIf2BsOfdmaDcdBurstProfileRowStatus OBJECT-TYPE
        SYNTAX      RowStatus
        MAX-ACCESS  read-create
        STATUS      current
        DESCRIPTION
            "This object is used to create a new row or modify or delete
             an existing row in this table. If the implementator of this
             MIB has choosen not to implement 'dynamic assignment' of
             profiles, this object is not useful and should return
             noSuchName upon SNMP request."
        ::= { wmanIf2BsOfdmaDcdBurstProfileEntry 3 }

wmanIf2BsOfdmaDcdDownlinkRegionTable OBJECT-TYPE
        SYNTAX      SEQUENCE OF WmanIf2BsOfdmaDcdDownlinkRegionEntry
        MAX-ACCESS  not-accessible
        STATUS      current
        DESCRIPTION
            "This table provides the downlink data region TLV
             that are sent in the DCD meesage."
        REFERENCE
            "Table 574"
        ::= { wmanIf2BsOfdmaPhy 5 }

wmanIf2BsOfdmaDcdDownlinkRegionEntry OBJECT-TYPE
        SYNTAX      WmanIf2BsOfdmaDcdDownlinkRegionEntry
        MAX-ACCESS  not-accessible
        STATUS      current
        DESCRIPTION
            ""
        INDEX     { ifIndex, wmanIf2BsOfdmaDlRegionIndex }
        ::= { wmanIf2BsOfdmaDcdDownlinkRegionTable 1 }

WmanIf2BsOfdmaDcdDownlinkRegionEntry ::= SEQUENCE {
        wmanIf2BsOfdmaDlRegionIndex             Integer32,
        wmanIf2BsOfdmaSymbolOffset              Integer32,
```



```
        wmanIf2BsOfdmaSubchannelOffset          Integer32,
        wmanIf2BsOfdmaNumberOfSymbol            Integer32,
        wmanIf2BsOfdmaNumberOfSubchannel        Integer32,
        wmanIf2BsOfdmaDcdDlRegionRowStatus      RowStatus}

wmanIf2BsOfdmaDlRegionIndex OBJECT-TYPE
        SYNTAX      Integer32 (0 .. 63)
        MAX-ACCESS  not-accessible
        STATUS      current
        DESCRIPTION
            "Index to DL data region."
        ::= { wmanIf2BsOfdmaDcdDownlinkRegionEntry 1 }

wmanIf2BsOfdmaSymbolOffset OBJECT-TYPE
        SYNTAX      Integer32 (0 .. 255)
        MAX-ACCESS  read-create
        STATUS      current
        DESCRIPTION
            "OFDMA symbol offset"
        ::= { wmanIf2BsOfdmaDcdDownlinkRegionEntry 2 }

wmanIf2BsOfdmaSubchannelOffset OBJECT-TYPE
        SYNTAX      Integer32 (0 .. 63)
        MAX-ACCESS  read-create
        STATUS      current
        DESCRIPTION
            "OFDMA subchannel offset"
        ::= { wmanIf2BsOfdmaDcdDownlinkRegionEntry 3 }

wmanIf2BsOfdmaNumberOfSymbol OBJECT-TYPE
        SYNTAX      Integer32 (0 .. 255)
        MAX-ACCESS  read-create
        STATUS      current
        DESCRIPTION
            "Number of OFDMA symbols"
        ::= { wmanIf2BsOfdmaDcdDownlinkRegionEntry 4 }

wmanIf2BsOfdmaNumberOfSubchannel OBJECT-TYPE
        SYNTAX      Integer32 (0 .. 63)
        MAX-ACCESS  read-create
        STATUS      current
        DESCRIPTION
            "Number of OFDMA subchannels"
        ::= { wmanIf2BsOfdmaDcdDownlinkRegionEntry 5 }

wmanIf2BsOfdmaDcdDlRegionRowStatus OBJECT-TYPE
        SYNTAX      RowStatus
        MAX-ACCESS  read-create
        STATUS      current
        DESCRIPTION
            "This object is used to create a new row or modify or delete
             an existing row in this table. If the implementator of this
             MIB has choosen not to implement 'dynamic assignment' of
             profiles, this object is not useful and should return
```

```
             noSuchName upon SNMP request."
        ::= { wmanIf2BsOfdmaDcdDownlinkRegionEntry 6 }

--
-- wmanIf2BsAm group - containing tables and objects related to Account
--                     Management
--
wmanIf2BsOtaUsageDataRecordTable OBJECT-TYPE
        SYNTAX      SEQUENCE OF WmanIf2BsOtaUsageDataRecordEntry
        MAX-ACCESS  not-accessible
        STATUS      current
        DESCRIPTION
            "This table contains counters to keep track of the number
             of packets and octets that have been received or
             transmitted over the air interface. BS may delete some
             OTA UDR in wmanIf2BsOtaUsageDataRecordTable after they
             have been transferred to the AAA server."
        ::= { wmanIf2BsAm 1 }

wmanIf2BsOtaUsageDataRecordEntry OBJECT-TYPE
        SYNTAX      WmanIf2BsOtaUsageDataRecordEntry
        MAX-ACCESS  not-accessible
        STATUS      current
        DESCRIPTION
           "This table provides one row for each session, and Since MAC
            management CID (i.e. basic , primary, and 2nd management)
            share the same CID for both UL and DL, it should use the QoS
            parameter set to distinguish which entry is DL or UL."
        INDEX     { ifIndex,
                    wmanIf2BsSsMacAddress,
                    wmanIf2BsCid,
                    wmanIf2BsSessionId }
        ::= { wmanIf2BsOtaUsageDataRecordTable 1 }

WmanIf2BsOtaUsageDataRecordEntry::= SEQUENCE {
        wmanIf2BsCid                            Integer32,
        wmanIf2BsSessionId                      Unsigned32,
        wmanIf2BsServiceFlowId                  Unsigned32,
        wmanIf2BsMacSduCount                    Counter64,
        wmanIf2BsOctetCount                     Counter64,
        wmanIf2BsSessionEstablishTime           TimeStamp,
        wmanIf2BsSessionTerminateTime           TimeStamp,
        wmanIf2BsGlobalServiceClass             WmanIf2TcGlobalSrvClass,
        wmanIf2BsOtaQoSProfileIndex             Integer32}

wmanIf2BsCid OBJECT-TYPE
        SYNTAX      Integer32 (0 .. 65535)
        MAX-ACCESS  not-accessible
        STATUS      current
        DESCRIPTION
            "A 16 bit channel identifier points to the connection being
             created by DSA for this service flow."
        ::= { wmanIf2BsOtaUsageDataRecordEntry 1 }
```



```
wmanIf2BsSessionId OBJECT-TYPE
        SYNTAX      Unsigned32 (1 .. 4294967295)
        MAX-ACCESS  not-accessible
        STATUS      current
        DESCRIPTION
            "An index identifies the accounting seesion within a CID.
             An accounting session may be created or ended, based on
             certain events, for example
                 - QoS parameter set change in a CID
                 - wmanIf2BsServiceFlowState is changed
                 - an SS registers at the BS
                 - an MS handoffs to another BS"
        ::= { wmanIf2BsOtaUsageDataRecordEntry 2 }

wmanIf2BsServiceFlowId OBJECT-TYPE
        SYNTAX      Unsigned32 (1 .. 4294967295)
        MAX-ACCESS  read-only
        STATUS      current
        DESCRIPTION
            "A 32 bit quantity that uniquely identifies a service flow.
             wmanIf2BsServiceFlowId should return '0' for MAC
             management (i.e. basic, primary, and 2nd management CID)."
        ::= { wmanIf2BsOtaUsageDataRecordEntry 3 }

wmanIf2BsMacSduCount OBJECT-TYPE
        SYNTAX      Counter64
        UNITS       "SDU"
        MAX-ACCESS  read-only
        STATUS      current
        DESCRIPTION
            "This object counts the number of MAC SDUs or MAC messages
             that have been transmitted or received over the air
             interface. For MAC management CID, wmanIf2BsMacSduCount
             tracks SDU count on DL and UL."
        ::= { wmanIf2BsOtaUsageDataRecordEntry 4 }

wmanIf2BsOctetCount OBJECT-TYPE
        SYNTAX      Counter64
        UNITS       "Octet"
        MAX-ACCESS  read-only
        STATUS      current
        DESCRIPTION
            "This object counts the number of octets of MAC SDUs or MAC
             messages that have been transmitted or received over the
             air interface."
        ::= { wmanIf2BsOtaUsageDataRecordEntry 5 }

wmanIf2BsSessionEstablishTime OBJECT-TYPE
        SYNTAX      TimeStamp
        MAX-ACCESS  read-only
        STATUS      current
        DESCRIPTION
            "Indicates the date and time when the session is established
             ."
```

```
        ::= { wmanIf2BsOtaUsageDataRecordEntry 6 }

wmanIf2BsSessionTerminateTime OBJECT-TYPE
        SYNTAX      TimeStamp
        MAX-ACCESS  read-only
        STATUS      current
        DESCRIPTION
            "Indicates the date and time when the session is terminated
             ."
        ::= { wmanIf2BsOtaUsageDataRecordEntry 7 }

wmanIf2BsGlobalServiceClass OBJECT-TYPE
        SYNTAX      WmanIf2TcGlobalSrvClass
        MAX-ACCESS  read-only
        STATUS      current
        DESCRIPTION
            "This object defines the QoS parameter set used in this
             session. When '0' is returned from reading this object, it
             means either no global service class is available for this
             session, or its Qos profile may be defined in the entry
             pointed by wmanIf2BsOtaQoSProfileIndex."
        REFERENCE
            "Subclause 6.3.14.4.1"
        ::= { wmanIf2BsOtaUsageDataRecordEntry 8 }

wmanIf2BsOtaQoSProfileIndex OBJECT-TYPE
        SYNTAX      Integer32 (1 .. 65535)
        MAX-ACCESS  read-only
        STATUS      current
        DESCRIPTION
            "This index points to an entry in wmanIf2mCmnQoSProfileTable
             that defines the the QoS parameter set used in this
             session. When '0' is returned from reading this object, it
             means the QoS profile either is not available for this
             session."
        REFERENCE
            "Subclause 6.3.13 and 6.3.14"
        ::= { wmanIf2BsOtaUsageDataRecordEntry 9 }

--
-- wmanIf2BsPm group - containing tables and objects related to
--                     Performance Management
--
-- Performance Manageemnt Configuration Table
wmanIf2BsPmConfigurationTable OBJECT-TYPE
        SYNTAX      SEQUENCE OF WmanIf2BsPmConfigurationEntry
        MAX-ACCESS  not-accessible
        STATUS      current
        DESCRIPTION
            "This table contains the configuration of statistics
             information capture."
        ::= { wmanIf2BsPm 1 }

wmanIf2BsPmConfigurationEntry OBJECT-TYPE
```



```
        SYNTAX      WmanIf2BsPmConfigurationEntry
        MAX-ACCESS  not-accessible
        STATUS      current
        DESCRIPTION
            "This table provides one row for each BS sector."
        INDEX     { ifIndex }
        ::= { wmanIf2BsPmConfigurationTable  1 }

WmanIf2BsPmConfigurationEntry ::= SEQUENCE {
        wmanIf2BsGranularityInterval          INTEGER,
        wmanIf2BsCountersReportInterval       INTEGER,
        wmanIf2BsPmMeasurementBitMap          WmanIf2PmMeasureBitMap}

wmanIf2BsGranularityInterval OBJECT-TYPE
        SYNTAX      INTEGER
        UNITS       "Seconds"
        MAX-ACCESS  read-write
        STATUS      current
        DESCRIPTION
            "This object determines the interval that the BS uses to
             measure the peak and average data rate statistics to be
             stored in wmanIf2BsDataRateStatisticsTable."
        DEFVAL      { 1 }
        ::= { wmanIf2BsPmConfigurationEntry 1 }

wmanIf2BsCountersReportInterval OBJECT-TYPE
        SYNTAX      INTEGER
        UNITS       "Minutes"
        MAX-ACCESS  read-write
        STATUS      current
        DESCRIPTION
            "This object determines the interval that the BS shall
             generate an event trap to report the performance counters
             to EMS. BS should reset all counters after they have been
             reported to EMS via wmanIf2BsPerformanceCountersTrap."
        DEFVAL      { 15 }
        ::= { wmanIf2BsPmConfigurationEntry 2 }

wmanIf2BsPmMeasurementBitMap OBJECT-TYPE
        SYNTAX      WmanIf2PmMeasureBitMap
        MAX-ACCESS  read-write
        STATUS      current
        DESCRIPTION
            "A bit of of this object is set to
               '1' - the corresponding erformance measurement is enable
               '0' - the corresponding performance measurement is
                     disable."
        DEFVAL      { 0 }
        ::= { wmanIf2BsPmConfigurationEntry 3 }

wmanIf2BsRssiCinrMetricsTable OBJECT-TYPE
        SYNTAX      SEQUENCE OF   WmanIf2BsRssiCinrMetricsEntry
        MAX-ACCESS  not-accessible
        STATUS      current
```

```
        DESCRIPTION
            "This table contains channel measurement information as
             derived from BS measurement of uplink signal from SS,
             and the downlink signal as reported from SS using
             REP-REQ/RSP messages. The table shall be maintained as
             FIFO to store measurement samples that can be used to
             create RSSI and CINR histogram report. When the
             measurement entry for a SS reaches the limit, the oldest
             entry shall be deleted as the new entry is added to the
             table."
        REFERENCE
            "6.3.2.3.33"
        ::= { wmanIf2BsPm 2 }

wmanIf2BsRssiCinrMetricsEntry OBJECT-TYPE
        SYNTAX      WmanIf2BsRssiCinrMetricsEntry
        MAX-ACCESS  not-accessible
        STATUS      current
        DESCRIPTION
            "Each entry in the table contains RSSI and CINR
             signal quality measurement on signal received from the SS.
             The primary index is the ifIndex with ifType of
             ieee80216WMAN identifing the BS sector.
             wmanIf2BsSsMacAddress identifies the SS from which the
             signal was received. wmanIf2BsChannelDirection is the
             index to the direction of the channel.
             wmanIf2BsHistogramIndex is the index to histogram samples.
             Since there is no time stamp in the table,
             wmanIf2BsHistogramIndex should be increased monotonically,
             and wraps around when it reaches the implementation
             specific limit."
        INDEX     { ifIndex,
                    wmanIf2BsSsMacAddress,
                    wmanIf2BsChannelDirection,
                    wmanIf2BsHistogramIndex }
        ::= { wmanIf2BsRssiCinrMetricsTable  1 }

WmanIf2BsRssiCinrMetricsEntry ::= SEQUENCE {
        wmanIf2BsChannelDirection               WmanIf2TcSfDirection,
        wmanIf2BsHistogramIndex                 Unsigned32,
        wmanIf2BsChannelNumber                  WmanIf2TcChannelNumber,
        wmanIf2BsStartFrame                     INTEGER,
        wmanIf2BsDuration                       INTEGER,
        wmanIf2BsBasicReport                    BITS,
        wmanIf2BsMeanCinrReport                 INTEGER,
        wmanIf2BsMeanRssiReport                 INTEGER,
        wmanIf2BsStdDeviationCinrReport         INTEGER,
        wmanIf2BsStdDeviationRssiReport         INTEGER}

wmanIf2BsChannelDirection OBJECT-TYPE
        SYNTAX      WmanIf2TcSfDirection
        MAX-ACCESS  not-accessible
        STATUS      current
        DESCRIPTION
```



```
            "wmanIf2BsChannelDirection identifies the direction of a
             a channel where the measurement takes place."
        ::= { wmanIf2BsRssiCinrMetricsEntry 1 }

wmanIf2BsHistogramIndex OBJECT-TYPE
        SYNTAX      Unsigned32 (1 .. 4294967295)
        MAX-ACCESS  not-accessible
        STATUS      current
        DESCRIPTION
            "wmanIf2BsHistogramIndex identifies the histogram samples
             in the table for each subscriber station."
        ::= { wmanIf2BsRssiCinrMetricsEntry 2 }

wmanIf2BsChannelNumber OBJECT-TYPE
        SYNTAX      WmanIf2TcChannelNumber
        MAX-ACCESS  read-only
        STATUS      current
        DESCRIPTION
            "Physical channel number to be reported on is only
             applicable to license exempt band. For licensed band,
             this parameter should be null."
        REFERENCE
            "Subclause 11.12"
        ::= { wmanIf2BsRssiCinrMetricsEntry 3 }

wmanIf2BsStartFrame OBJECT-TYPE
        SYNTAX      INTEGER (0..65535)
        MAX-ACCESS  read-only
        STATUS      current
        DESCRIPTION
            "Frame number in which measurement for this channel
             started."
        REFERENCE
            "Subclause 11.12"
        ::= { wmanIf2BsRssiCinrMetricsEntry 4 }

wmanIf2BsDuration OBJECT-TYPE
        SYNTAX      INTEGER (0 .. 16777215)
        MAX-ACCESS  read-only
        STATUS      current
        DESCRIPTION
            "Cumulative measurement duration on the channel in
             multiples of Ts. For any value exceeding 0xFFFFFF,
             report 0xFFFFFF."
        REFERENCE
            "Subclause 11.12"
        ::= { wmanIf2BsRssiCinrMetricsEntry 5 }

wmanIf2BsBasicReport OBJECT-TYPE
        SYNTAX      BITS {wirelessHuman(0),
                          unknownTransmission(1),
                          primaryUser(2),
                          channelNotMeasured(3)}
        MAX-ACCESS  read-only
```

```
        STATUS      current
        DESCRIPTION
            "Bit 0: WirelessHUMAN detected on the channel
             Bit 1: Unknown transmissions detected on the channel
             Bit 2: Primary User detected on the channel
             Bit 3: Unmeasured. Channel not measured"
        REFERENCE
            "Subclause 11.12"
        ::= { wmanIf2BsRssiCinrMetricsEntry 6 }

wmanIf2BsMeanCinrReport OBJECT-TYPE
        SYNTAX      INTEGER (-20 .. 37)
        UNITS       "dB"
        MAX-ACCESS  read-only
        STATUS      current
        DESCRIPTION
            "Mean CINR report."
        REFERENCE
            "Subclause 8.3.9"
        ::= { wmanIf2BsRssiCinrMetricsEntry 7 }

wmanIf2BsMeanRssiReport OBJECT-TYPE
        SYNTAX      INTEGER (-123 .. -40)
        UNITS       "dBm"
        MAX-ACCESS  read-only
        STATUS      current
        DESCRIPTION
            "Mean RSSI report."
        REFERENCE
            "Subclause 8.3.9"
        ::= { wmanIf2BsRssiCinrMetricsEntry 8 }

wmanIf2BsStdDeviationCinrReport OBJECT-TYPE
        SYNTAX      INTEGER (0 .. 29)
        UNITS       "dB"
        MAX-ACCESS  read-only
        STATUS      current
        DESCRIPTION
             "Standard deviation CINR report."
        REFERENCE
            "Subclause 8.3.9"
        ::= { wmanIf2BsRssiCinrMetricsEntry 9 }

wmanIf2BsStdDeviationRssiReport OBJECT-TYPE
        SYNTAX      INTEGER (0 .. 42)
        UNITS       "dB"
        MAX-ACCESS  read-only
        STATUS      current
        DESCRIPTION
             "Standard deviation RSSI report."
        REFERENCE
            "Subclause 8.3.9"
        ::= { wmanIf2BsRssiCinrMetricsEntry 10 }
```



```
--
-- Mobile Station startup metrics Table
--
wmanIf2BsStartupMetricsTable OBJECT-TYPE
        SYNTAX      SEQUENCE OF WmanIf2BsStartupMetricsEntry
        MAX-ACCESS  not-accessible
        STATUS      current
        DESCRIPTION
            "This table contains statistical information that can be
             used to characterize SS' performance during the startup.
             BS should reset all counters after they have been reported
             to EMS via wmanIf2BsPerformanceCountersTrap."
        ::= { wmanIf2BsPm 3 }

wmanIf2BsStartupMetricsEntry OBJECT-TYPE
        SYNTAX      WmanIf2BsStartupMetricsEntry
        MAX-ACCESS  not-accessible
        STATUS      current
        DESCRIPTION
            "This table provides one row for each BS sector."
        INDEX     { ifIndex }
        ::= { wmanIf2BsStartupMetricsTable  1 }

WmanIf2BsStartupMetricsEntry ::= SEQUENCE {
        wmanIf2BsAuthenAttempt                Counter32,
        wmanIf2BsAuthenSuccess                Counter32,
        wmanIf2BsAuthenSuccessRate            INTEGER,
        wmanIf2BsRangingAttempt               Counter32,
        wmanIf2BsRangingSuccess               Counter32,
        wmanIf2BsRangingSuccessRate           INTEGER}

wmanIf2BsAuthenAttempt OBJECT-TYPE
        SYNTAX      Counter32
        MAX-ACCESS  read-only
        STATUS      current
        DESCRIPTION
            "This object counts the number of SS authentication
             attempt. The BS increments the counter by one each time
             the BS receives:
               1) PKMv1 Auth Request,
               2) PKMv2 RSA-Request,
               3) PKMv2 EAP start message."
        ::= { wmanIf2BsStartupMetricsEntry 1 }

wmanIf2BsAuthenSuccess OBJECT-TYPE
        SYNTAX      Counter32
        MAX-ACCESS  read-only
        STATUS      current
        DESCRIPTION
            "This object counts the number of successful SS
             authentication. The BS increments the counter by one each
             time the BS sends:
               1) PKMv1 Auth Reply,
               2) PKMv2 RSA-Reply,
```

```
                3) PKMv2 EAP complete with EAP-success payload message."
        ::= { wmanIf2BsStartupMetricsEntry 2 }

wmanIf2BsAuthenSuccessRate OBJECT-TYPE
        SYNTAX      INTEGER
        MAX-ACCESS  read-only
        STATUS      current
        DESCRIPTION
            "wmanIf2BsAuthenSuccessRate % =
             wmanIf2BsAuthenSuccess  / wmanIf2BsAuthenAttempt * 100"
        ::= { wmanIf2BsStartupMetricsEntry 3 }

wmanIf2BsRangingAttempt OBJECT-TYPE
        SYNTAX      Counter32
        MAX-ACCESS  read-only
        STATUS      current
        DESCRIPTION
            "This object counts the number of SS Ranging attempt. The BS
             increments the counter by one each time the BS receives the
             RNG-REQ message."
        ::= { wmanIf2BsStartupMetricsEntry 4 }

wmanIf2BsRangingSuccess OBJECT-TYPE
        SYNTAX      Counter32
        MAX-ACCESS  read-only
        STATUS      current
        DESCRIPTION
            "This object counts the number of successful SS Ranging.
             The increments the counter by one each time the BS sends
             the RNG-RSP message."
        ::= { wmanIf2BsStartupMetricsEntry 5 }

wmanIf2BsRangingSuccessRate OBJECT-TYPE
        SYNTAX      INTEGER
        MAX-ACCESS  read-only
        STATUS      current
        DESCRIPTION
            "wmanIf2BsRangingSuccessRate % =
             wmanIf2BsNetwkEntrySuccess / wmanIf2BsNetwkEntryAttempt
             * 100."
        ::= { wmanIf2BsStartupMetricsEntry 6 }

--
-- Base Station Throughput Metrics Table
--
wmanIf2BsThroughputMetricsTable OBJECT-TYPE
        SYNTAX      SEQUENCE OF WmanIf2BsThroughputMetricsEntry
        MAX-ACCESS  not-accessible
        STATUS      current
        DESCRIPTION
            "This table contains the average and peak data rate
             statistics at the BS sector level. The BS measures the
             number of bytes that are sent or received withing each
             interval set by the wmanIf2BsGranularityInterval object.
```



```
             For example:
             S = the number of bytes measured in an interval
             N = the number of measurements

             Avg(N) = the average data rate after N measurements
             Avg(0) = S, the 1st measurement
             Avg(N) = (Avg(N-1)*(N-1) + S) / N

             Peak(N) = the peak data rate after N measurement
             Peak(0) = S, the 1st measurement
             Peak(N) = S if S > Peak(N-1)
                     = Peak(N -1) if S <= Peak(N-1)
             BS should reset all counters after they have been reported
             to EMS via wmanIf2BsPerformanceCountersTrap."
        ::= { wmanIf2BsPm 4 }

wmanIf2BsThroughputMetricsEntry OBJECT-TYPE
        SYNTAX      WmanIf2BsThroughputMetricsEntry
        MAX-ACCESS  not-accessible
        STATUS      current
        DESCRIPTION
            "This table provides one row for each BS sector."
        INDEX     { ifIndex }
        ::= { wmanIf2BsThroughputMetricsTable 1 }

WmanIf2BsThroughputMetricsEntry ::= SEQUENCE {
        wmanIf2BsAvgDlUserThroughput            Counter32,
        wmanIf2BsAvgUlUserThroughput            Counter32,
        wmanIf2BsAvgDlMacThroughput             Counter32,
        wmanIf2BsAvgUlMacThroughput             Counter32,
        wmanIf2BsAvgDlPhyThroughput             Counter32,
        wmanIf2BsAvgUlPhyThroughput             Counter32,
        wmanIf2BsPeakDlUserThroughput           Counter32,
        wmanIf2BsPeakUlUserThroughput           Counter32,
        wmanIf2BsPeakDlMacThroughput            Counter32,
        wmanIf2BsPeakUlMacThroughput            Counter32,
        wmanIf2BsPeakDlPhyThroughput            Counter32,
        wmanIf2BsPeakUlPhyThroughput            Counter32,
        wmanIf2BsAvgDlCellEdgeThroughput        Counter32,
        wmanIf2BsAvgUlCellEdgeThroughput        Counter32,
        wmanIf2BsThroughputMeasurements         Counter32}

wmanIf2BsAvgDlUserThroughput OBJECT-TYPE
        SYNTAX      Counter32
        UNITS       "Octet"
        MAX-ACCESS  read-only
        STATUS      current
        DESCRIPTION
            "This object records the average downlink user throughput
             Avg(N). Each measurement indicates the number of octets of
             MAC SDUs that are sent within the
             wmanIf2BsGranularityInterval interval."
        ::= { wmanIf2BsThroughputMetricsEntry 1 }
```

```
wmanIf2BsAvgUlUserThroughput OBJECT-TYPE
        SYNTAX      Counter32
        UNITS       "Octet"
        MAX-ACCESS  read-only
        STATUS      current
        DESCRIPTION
            "This object records the average uplink user throughput
             Avg(N). Each measurement indicates the number of octets of
             MAC SDUs that are received within the
             wmanIf2BsGranularityInterval interval."
        ::= { wmanIf2BsThroughputMetricsEntry 2 }

wmanIf2BsAvgDlMacThroughput OBJECT-TYPE
        SYNTAX      Counter32
        UNITS       "Octet"
        MAX-ACCESS  read-only
        STATUS      current
        DESCRIPTION
            "This object records the average downlink MAC throughput
             Avg(N). Each measurement indicates the number of octets of
             MAC PDUs (i.e. user data, MAC headers, and MAC management
             messages) that are sent within the
             wmanIf2BsGranularityInterval interval."
        ::= { wmanIf2BsThroughputMetricsEntry 3 }

wmanIf2BsAvgUlMacThroughput OBJECT-TYPE
        SYNTAX      Counter32
        UNITS       "Octet"
        MAX-ACCESS  read-only
        STATUS      current
        DESCRIPTION
            "This object records the average uplink MAC throughput
             Avg(N). Each measurement indicates the number of octets of
             MAC PDUs (i.e. user data, MAC headers, and MAC management
             messages) that are received within the
             wmanIf2BsGranularityInterval interval."
        ::= { wmanIf2BsThroughputMetricsEntry 4 }

wmanIf2BsAvgDlPhyThroughput OBJECT-TYPE
        SYNTAX      Counter32
        UNITS       "Octet"
        MAX-ACCESS  read-only
        STATUS      current
        DESCRIPTION
            "This object records the average downlink PHY throughput
             Avg(N). Each measurement indicates the number of octets of
             bursts (i.e. MAC PDU + PHY overheads) that are sent within
             the wmanIf2BsGranularityInterval interval."
        ::= { wmanIf2BsThroughputMetricsEntry 5 }

wmanIf2BsAvgUlPhyThroughput OBJECT-TYPE
        SYNTAX      Counter32
        UNITS       "Octet"
```



```
        MAX-ACCESS  read-only
        STATUS      current
        DESCRIPTION
            "This object records the average uplink PHY throughput
             Avg(N). Each measurement indicates the number of octets of
             bursts (i.e. MAC PDU + PHY overheads) that are received
             within the wmanIf2BsGranularityInterval interval."
        ::= { wmanIf2BsThroughputMetricsEntry 6 }

wmanIf2BsPeakDlUserThroughput OBJECT-TYPE
        SYNTAX      Counter32
        UNITS       "Octet"
        MAX-ACCESS  read-only
        STATUS      current
        DESCRIPTION
            "This object records the peak downlink user throughput
             Peak(N). Each measurement indicates the number of octets of
             MAC SDUs that are sent within the
             wmanIf2BsGranularityInterval interval."
        ::= { wmanIf2BsThroughputMetricsEntry 7 }

wmanIf2BsPeakUlUserThroughput OBJECT-TYPE
        SYNTAX      Counter32
        UNITS       "Octet"
        MAX-ACCESS  read-only
        STATUS      current
        DESCRIPTION
            "This object records the peak uplink user throughput Peak(N)
             . Each measurement indicates the number of octets of MAC
             SDUs that are received within the
             wmanIf2BsGranularityInterval interval."
        ::= { wmanIf2BsThroughputMetricsEntry 8 }

wmanIf2BsPeakDlMacThroughput OBJECT-TYPE
        SYNTAX      Counter32
        UNITS       "Octet"
        MAX-ACCESS  read-only
        STATUS      current
        DESCRIPTION
            "This object records the peak downlink MAC throughput
             Peak(N). Each measurement indicates the number of octets of
             MAC PDUs (i.e. user data, MAC headers, and MAC management
             messages) that are sent within the
             wmanIf2BsGranularityInterval interval."
        ::= { wmanIf2BsThroughputMetricsEntry 9 }

wmanIf2BsPeakUlMacThroughput OBJECT-TYPE
        SYNTAX      Counter32
        UNITS       "Octet"
        MAX-ACCESS  read-only
        STATUS      current
        DESCRIPTION
            "This object records the peak uplink MAC throughput Peak(N).
             Each measurement indicates the number of octets of MAC PDUs
```

```
             (i.e. user data, MAC headers, and MAC management messages)
             that are received within the wmanIf2BsGranularityInterval
             interval."
        ::= { wmanIf2BsThroughputMetricsEntry 10 }

wmanIf2BsPeakDlPhyThroughput OBJECT-TYPE
        SYNTAX      Counter32
        UNITS       "Octet"
        MAX-ACCESS  read-only
        STATUS      current
        DESCRIPTION
            "This object records the peak downlink PHY throughput
             Peak(N). Each measurement indicates the number of octets of
             bursts (i.e. MAC PDU + PHY overheads) that are sent within
             the wmanIf2BsGranularityInterval interval."
        ::= { wmanIf2BsThroughputMetricsEntry 11 }

wmanIf2BsPeakUlPhyThroughput OBJECT-TYPE
        SYNTAX      Counter32
        UNITS       "Octet"
        MAX-ACCESS  read-only
        STATUS      current
        DESCRIPTION
            "This object records the peak uplink PHY throughput Peak(N).
             Each measurement indicates the number of octets of bursts
             (i.e. MAC PDU + PHY overheads) that are received within the
             wmanIf2BsGranularityInterval interval."
        ::= { wmanIf2BsThroughputMetricsEntry 12 }

wmanIf2BsAvgDlCellEdgeThroughput OBJECT-TYPE
        SYNTAX      Counter32
        UNITS       "Octet"
        MAX-ACCESS  read-only
        STATUS      current
        DESCRIPTION
            "This object records the Average downlink MAC throughput
             Avg(N). Each measurement indicates the number of octets of
             MAC PDU that are sent within the
             wmanIf2BsGranularityInterval interval using the most robust
             coding (i.e. QPSK)."
        ::= { wmanIf2BsThroughputMetricsEntry 13 }

wmanIf2BsAvgUlCellEdgeThroughput OBJECT-TYPE
        SYNTAX      Counter32
        UNITS       "Octet"
        MAX-ACCESS  read-only
        STATUS      current
        DESCRIPTION
            "This object records the peak uplink PHY throughput Peak(N).
             Each measurement indicates the number of octets of MAC PDU
             that are received within the wmanIf2BsGranularityInterval
             interval using the most robust coding (i.e. QPSK)."
        ::= { wmanIf2BsThroughputMetricsEntry 14 }
```



```
wmanIf2BsThroughputMeasurements OBJECT-TYPE
        SYNTAX      Counter32
        MAX-ACCESS  read-only
        STATUS      current
        DESCRIPTION
            "This object tracks the number of measurements 'N'."
        ::= { wmanIf2BsThroughputMetricsEntry 15 }

--
-- Base Station Network Entry Metrics Table
--
wmanIf2BsNetworkEntryMetricsTable OBJECT-TYPE
        SYNTAX      SEQUENCE OF WmanIf2BsNetworkEntryMetricsEntry
        MAX-ACCESS  not-accessible
        STATUS      current
        DESCRIPTION
            "This table contains the average and maximum latency for
             network entry and network re-entry.

             For example:
             T = a) Network entry latency is the amount of time between:
                    1. BS received the 1st RNG-REQ from a SS
                    2. BS sends the DSA-RSP to such SS
                 b) Network re-entry latency is the time between:
                    1. BS received the 1st RNG-REQ from a SS with the
                       Ranging Purpose Indication TLV to indicate that
                       the SS is leaving the idle mode
                    2. BS sends the DSA-RSP to such SS
             N = the number of network entries

             Avg(N) = the average latency after N network entries
             Avg(0) = T, the 1st network entry
             Avg(N) = (Avg(N-1)*(N-1) + T) / N

             Max(N) = the maximum latency after N network entries
             Max(0) = T, the 1st network entry
             Max(N) = T if T > Max(N-1)
                     = Max(N-1) if T <= Max(N-1)
             BS should reset all counters after they have been reported
             to EMS via wmanIf2BsPerformanceCountersTrap."
        ::= { wmanIf2BsPm 5 }

wmanIf2BsNetworkEntryMetricsEntry OBJECT-TYPE
        SYNTAX      WmanIf2BsNetworkEntryMetricsEntry
        MAX-ACCESS  not-accessible
        STATUS      current
        DESCRIPTION
            "This table provides one row for each BS sector."
        INDEX     { ifIndex }
        ::= { wmanIf2BsNetworkEntryMetricsTable 1 }

WmanIf2BsNetworkEntryMetricsEntry ::= SEQUENCE {
        wmanIf2BsAvgNetworkEntryLatency         INTEGER,
        wmanIf2BsMaxNetworkEntryLatency         INTEGER,
```

```
        wmanIf2BsAvgNetworkReEntryLatency       INTEGER,
        wmanIf2BsMaxNetworkReEntryLatency       INTEGER,
        wmanIf2BsNumOfNetworkEntries            Counter32,
        wmanIf2BsNumOfNetworkReEntries          Counter32}

wmanIf2BsAvgNetworkEntryLatency OBJECT-TYPE
        SYNTAX      INTEGER
        UNITS       "second"
        MAX-ACCESS  read-only
        STATUS      current
        DESCRIPTION
            "This object records the average network entry latency
             Avg(N)."
        ::= { wmanIf2BsNetworkEntryMetricsEntry 1 }

wmanIf2BsMaxNetworkEntryLatency OBJECT-TYPE
        SYNTAX      INTEGER
        UNITS       "second"
        MAX-ACCESS  read-only
        STATUS      current
        DESCRIPTION
            "This object records the maximum network entry latency
             Max(N)."
        ::= { wmanIf2BsNetworkEntryMetricsEntry 2 }

wmanIf2BsAvgNetworkReEntryLatency OBJECT-TYPE
        SYNTAX      INTEGER
        UNITS       "second"
        MAX-ACCESS  read-only
        STATUS      current
        DESCRIPTION
            "This object records the average network re-entry latency
             Avg(N)."
        ::= { wmanIf2BsNetworkEntryMetricsEntry 3 }

wmanIf2BsMaxNetworkReEntryLatency OBJECT-TYPE
        SYNTAX      INTEGER
        UNITS       "second"
        MAX-ACCESS  read-only
        STATUS      current
        DESCRIPTION
            "This object records the maximum network re-entry latency
             Max(N)."
        ::= { wmanIf2BsNetworkEntryMetricsEntry 4 }

wmanIf2BsNumOfNetworkEntries OBJECT-TYPE
        SYNTAX      Counter32
        MAX-ACCESS  read-only
        STATUS      current
        DESCRIPTION
            "This object tracks the number of network entries 'N'."
        ::= { wmanIf2BsNetworkEntryMetricsEntry 5 }

wmanIf2BsNumOfNetworkReEntries OBJECT-TYPE
```



```
        SYNTAX      Counter32
        MAX-ACCESS  read-only
        STATUS      current
        DESCRIPTION
            "This object tracks the number of network re-entries 'N'."
        ::= { wmanIf2BsNetworkEntryMetricsEntry 6 }

--
-- Mobile Packet Error Rate Table
--
wmanIf2BsPacketErrorRateTable OBJECT-TYPE
        SYNTAX      SEQUENCE OF WmanIf2BsPacketErrorRateEntry
        MAX-ACCESS  not-accessible
        STATUS      current
        DESCRIPTION
            "This table contains the packet error rate information.
            BS should reset all counters after they have been reported
            to EMS via wmanIf2BsPerformanceCountersTrap"
        ::= { wmanIf2BsPm 6 }

wmanIf2BsPacketErrorRateEntry OBJECT-TYPE
        SYNTAX      WmanIf2BsPacketErrorRateEntry
        MAX-ACCESS  not-accessible
        STATUS      current
        DESCRIPTION
            "This table provides one row for each BS sector."
        INDEX     { ifIndex }
        ::= { wmanIf2BsPacketErrorRateTable  1 }

WmanIf2BsPacketErrorRateEntry ::= SEQUENCE {
        wmanIf2BsDlPacketsSent                  Counter64,
        wmanIf2BsDlPacketsErrored               Counter64,
        wmanIf2BsDlPacketErrorRate              Unsigned32,
        wmanIf2BsUlPacketsReceived              Counter64,
        wmanIf2BsUlPacketsErrored               Counter64,
        wmanIf2BsUlPacketErrorRate              Unsigned32}

wmanIf2BsDlPacketsSent OBJECT-TYPE
        SYNTAX      Counter64
        MAX-ACCESS  read-only
        STATUS      current
        DESCRIPTION
            "This object counts the total number of MAC SDUs that a BS
             has sent."
        ::= { wmanIf2BsPacketErrorRateEntry 1 }

wmanIf2BsDlPacketsErrored OBJECT-TYPE
        SYNTAX      Counter64
        MAX-ACCESS  read-only
        STATUS      current
        DESCRIPTION
            "This object counts the total number of MAC SDUs including
             at least an ARQ block that has not been successful
             acknowledged (i.e. timeout or NAK)."
```

```
        ::= { wmanIf2BsPacketErrorRateEntry 2 }

wmanIf2BsDlPacketErrorRate OBJECT-TYPE
        SYNTAX      Unsigned32
        UNITS       "1x10E-7"
        MAX-ACCESS  read-only
        STATUS      current
        DESCRIPTION
            "wmanIf2BsDlPacketErrorRate = (wmanIf2BsDlPacketsErrored /
             wmanIf2BsDlPacketsSent) * 10000000"
        ::= { wmanIf2BsPacketErrorRateEntry 3 }

wmanIf2BsUlPacketsReceived OBJECT-TYPE
        SYNTAX      Counter64
        MAX-ACCESS  read-only
        STATUS      current
        DESCRIPTION
            "This object counts the total number of MAC SDUs that a BS
             has received."
        ::= { wmanIf2BsPacketErrorRateEntry 4 }

wmanIf2BsUlPacketsErrored OBJECT-TYPE
        SYNTAX      Counter64
        MAX-ACCESS  read-only
        STATUS      current
        DESCRIPTION
            "This object counts the total number of MAC SDUs that have
             CRC error or include at least one errored ARQ block
             resulted in retransmission.
             ."
        ::= { wmanIf2BsPacketErrorRateEntry 5 }

wmanIf2BsUlPacketErrorRate OBJECT-TYPE
        SYNTAX      Unsigned32
        UNITS       "1x10E-7"
        MAX-ACCESS  read-only
        STATUS      current
        DESCRIPTION
            "wmanIf2BsUlPacketErrorRate = (wmanIf2BsUlPacketsErrored /
             wmanIf2BsUlPacketsReceived) * 10000000"
        ::= { wmanIf2BsPacketErrorRateEntry 6 }

--
-- Mobile Station handover metrics Table
--
wmanIf2BsHandoverMetricsTable OBJECT-TYPE
        SYNTAX      SEQUENCE OF WmanIf2BsHandoverMetricsEntry
        MAX-ACCESS  not-accessible
        STATUS      current
        DESCRIPTION
            "This table contains metrics information that can be
             used to characterize SS' performance during the handover.

             The BS measures the number of handovers occurred within
```



```
            each interval set by the wmanIf2BsGranularityInterval object
             . The formula of the measurement is shown below:

             T = Handover latency is the time between:
                 1. Target BS receives the backbone handover indication
                    message from the serving BS for a give SS
                 2. The given SS completes the ranging successfully by
                    receiving RNG-RSP from the target BS

             N = the number of handover completed in a reporting
                 interval

             Avg(N) = the average latency after N handovers
             Avg(0) = T, the 1st handover latency
             Avg(N) = (Avg(N-1)*(N-1) + T) / N

             Max(N) = the maximum latency after N handovers
             Max(0) = T, the 1st handover latency
             Max(N) = T if T > Max(N-1)
                     = Max(N-1) if T <= Max(N-1)
             BS should reset all counters after they have been reported
             to EMS via wmanIf2BsPerformanceCountersTrap."
        ::= { wmanIf2BsPm 7 }

wmanIf2BsHandoverMetricsEntry OBJECT-TYPE
        SYNTAX      WmanIf2BsHandoverMetricsEntry
        MAX-ACCESS  not-accessible
        STATUS      current
        DESCRIPTION
            "This table provides one row for each BS sector."
        INDEX     { ifIndex }
        ::= { wmanIf2BsHandoverMetricsTable  1 }

WmanIf2BsHandoverMetricsEntry ::= SEQUENCE {
        wmanIf2BsHandoverAttempt                Counter32,
        wmanIf2BsHandoverSuccess                Counter32,
        wmanIf2BsHandoverSuccessRate            INTEGER,
        wmanIf2BsHandoverCancel                 Counter32,
        wmanIf2BsHandoverReject                 Counter32,
        wmanIf2BsHandoverCancelRate             INTEGER,
        wmanIf2BsHandoverRejectRate             INTEGER,
        wmanIf2BsUnexpectedHandover             Counter32,
        wmanIf2BsAvgHandoverTime                INTEGER,
        wmanIf2BsMaxHandoverTime                INTEGER,
        wmanIf2BsHandoverMeasurements           Counter32}

wmanIf2BsHandoverAttempt OBJECT-TYPE
        SYNTAX      Counter32
        MAX-ACCESS  read-only
        STATUS      current
        DESCRIPTION
            "This object counts the number of SS initiated handover
             attempts. The serving BS increments the counter by one each
             time the BS receives MOB_MSHO-REQ from SS."
```

```
        ::= { wmanIf2BsHandoverMetricsEntry 1 }

wmanIf2BsHandoverSuccess OBJECT-TYPE
        SYNTAX      Counter32
        MAX-ACCESS  read-only
        STATUS      current
        DESCRIPTION
            "This object counts the number of successful SS initiated
             handover. The serving BS increments the counter by one each
             time the BS sends MOB_BSHO-RSP to SS."
        ::= { wmanIf2BsHandoverMetricsEntry 2 }

wmanIf2BsHandoverSuccessRate OBJECT-TYPE
        SYNTAX      INTEGER
        MAX-ACCESS  read-only
        STATUS      current
        DESCRIPTION
            "wmanIf2BsHandoverSuccessRate % =
             wmanIf2BsHandoverSuccess / wmanIf2BsHandoverAttempt
             * 100"
        ::= { wmanIf2BsHandoverMetricsEntry 3 }

wmanIf2BsHandoverCancel OBJECT-TYPE
        SYNTAX      Counter32
        MAX-ACCESS  read-only
        STATUS      current
        DESCRIPTION
            "This object counts the number of SS initiated handover
             cancellation. The serving BS increments the counter by one
             each time the BS receives MOB_HO-IND with
                 HO_IND_type = 'HO cancel'"
        ::= { wmanIf2BsHandoverMetricsEntry 4 }

wmanIf2BsHandoverReject OBJECT-TYPE
        SYNTAX      Counter32
        MAX-ACCESS  read-only
        STATUS      current
        DESCRIPTION
            "This object counts the number of SS initiated handover
             rejected by BS. The serving BS increments the counter by
             one each time the BS receives MOB_HO-IND with
                 HO_IND_type = 'HO reject'"
        ::= { wmanIf2BsHandoverMetricsEntry 5 }

wmanIf2BsHandoverCancelRate OBJECT-TYPE
        SYNTAX      INTEGER
        MAX-ACCESS  read-only
        STATUS      current
        DESCRIPTION
            "wmanIf2BsHandoverCancelRate % =
             wmanIf2BsHandoverCancel / wmanIf2BsHandoverAttempt
             * 100"
        ::= { wmanIf2BsHandoverMetricsEntry 6 }
```



```
wmanIf2BsHandoverRejectRate OBJECT-TYPE
        SYNTAX      INTEGER
        MAX-ACCESS  read-only
        STATUS      current
        DESCRIPTION
            "wmanIf2BsHandoverRejectRate % =
             wmanIf2BsHandoverReject  / wmanIf2BsHandoverAttempt
             * 100"
        ::= { wmanIf2BsHandoverMetricsEntry 7 }

wmanIf2BsUnexpectedHandover OBJECT-TYPE
        SYNTAX      Counter32
        MAX-ACCESS  read-only
        STATUS      current
        DESCRIPTION
            "This object counts the number of unexpected SS initiated
             handover attempts. The target BS increments the counter by
             one each time the target BS receives RNG-REQ from a SS
             initiated handover without backbone handover indication
             message from the serving BS."
        ::= { wmanIf2BsHandoverMetricsEntry 8 }

wmanIf2BsAvgHandoverTime OBJECT-TYPE
        SYNTAX      INTEGER
        UNITS       "millisecond"
        MAX-ACCESS  read-only
        STATUS      current
        DESCRIPTION
            "This object records the average handover time Avg(N)
             measured at target BS."
        ::= { wmanIf2BsHandoverMetricsEntry 9 }

wmanIf2BsMaxHandoverTime OBJECT-TYPE
        SYNTAX      INTEGER
        UNITS       "millisecond"
        MAX-ACCESS  read-only
        STATUS      current
        DESCRIPTION
            "This object records the maximum handover time Max(N)
             measured at target BS."
        ::= { wmanIf2BsHandoverMetricsEntry 10 }

wmanIf2BsHandoverMeasurements OBJECT-TYPE
        SYNTAX      Counter32
        MAX-ACCESS  read-only
        STATUS      current
        DESCRIPTION
            "This object tracks the number of handover measurements
             'N'."
        ::= { wmanIf2BsHandoverMetricsEntry 11 }

--
-- Mobile Station user metrics Table
--
```

```
wmanIf2BsUserMetricsTable OBJECT-TYPE
        SYNTAX      SEQUENCE OF WmanIf2BsUserMetricsEntry
        MAX-ACCESS  not-accessible
        STATUS      current
        DESCRIPTION
            "This table contains counter objects to track user metrics.

             The BS measures the number of users in various mode that
             are measured within the interval set by the
             wmanIf2BsGranularityInterval object. The formula of the
             measurement is shown below:

             T = the number of users measured in a granularity interval
                 Normal mode: increment T if MS REG-REQ successfully
                              decrement T if DREG-REQ or handover
                 Sleep mode:
             N = the number of measurements in a reporting interval

             Avg(N) = the average number of users in a given mode
             Avg(0) = T, the 1st measurement
             Avg(N) = (Avg(N-1)*(N-1) + T) / N

             Max(N) = the maximum number of user in a given mode
             Max(0) = T, the 1st measurement
             Max(N) = T if T > Max(N-1)
                     = Max(N-1) if T <= Max(N-1)
             BS should reset all counters after they have been reported
             to EMS via wmanIf2BsPerformanceCountersTrap."
        ::= { wmanIf2BsPm 8 }

wmanIf2BsUserMetricsEntry OBJECT-TYPE
        SYNTAX      WmanIf2BsUserMetricsEntry
        MAX-ACCESS  not-accessible
        STATUS      current
        DESCRIPTION
            "This table provides one row for each BS sector."
        INDEX     { ifIndex }
        ::= { wmanIf2BsUserMetricsTable  1 }

WmanIf2BsUserMetricsEntry ::= SEQUENCE {
        wmanIf2BsActiveUsers                    Counter32,
        wmanIf2BsMaxNormalModeUsers             Counter32,
        wmanIf2BsMaxSleepModeUsers              Counter32,
        wmanIf2BsMaxIdleModeUsers               Counter32,
        wmanIf2BsAvgNormalModeUsers             INTEGER,
        wmanIf2BsUsersMeasurements              Counter32}

wmanIf2BsActiveUsers OBJECT-TYPE
        SYNTAX      Counter32
        MAX-ACCESS  read-only
        STATUS      current
        DESCRIPTION
            "This object captures the number of active users over a
             reporting period by counting the number of SS's that have
```



```
             active CIDs."
        ::= { wmanIf2BsUserMetricsEntry 1 }

wmanIf2BsMaxNormalModeUsers OBJECT-TYPE
        SYNTAX      Counter32
        MAX-ACCESS  read-only
        STATUS      current
        DESCRIPTION
            "This object counts the number of maximum normal mode users.
             The serving BS increments the counter by one each time the
             BS receives REG-REQ from a SS and returns REG-RSP."
        ::= { wmanIf2BsUserMetricsEntry 2 }

wmanIf2BsMaxSleepModeUsers OBJECT-TYPE
        SYNTAX      Counter32
        MAX-ACCESS  read-only
        STATUS      current
        DESCRIPTION
            "This object counts the number of maximum sleep mode users.
             The serving BS increments the counter by one each time the
             BS successfully puts a SS into sleep mod by doing the
             following.
             1. BS receives MOB_SLP-REQ from a SS and returns
                MOB_SLP-RSP.
             2. BS send MOB_SLP-RSP to a SS autonomously."
        ::= { wmanIf2BsUserMetricsEntry 3 }

wmanIf2BsMaxIdleModeUsers OBJECT-TYPE
        SYNTAX      Counter32
        MAX-ACCESS  read-only
        STATUS      current
        DESCRIPTION
            "This object counts the number of maximum idle mode users.
             The serving BS increments the counter by one each time the
             BS successfully puts a SS into the idle mode by doing the
             following.
             1. SS sends DREG-REQ with a De-Registration_Request_Code =
                0x01; BS returns DREG-CMD message to the SS.
             2. BS sends a DREG-CMD with an Action Code = 0x05 in
                unsolicited manner; SS returns the DREG-REQ message with
                De-Registration_Request_Code = 0x02"
        ::= { wmanIf2BsUserMetricsEntry 4 }

wmanIf2BsAvgNormalModeUsers OBJECT-TYPE
        SYNTAX      INTEGER
        MAX-ACCESS  read-only
        STATUS      current
        DESCRIPTION
            "This object records the average normal mode users Avg(N)
             measured at BS."
        ::= { wmanIf2BsUserMetricsEntry 5 }

wmanIf2BsUsersMeasurements OBJECT-TYPE
        SYNTAX      Counter32
```

```
        MAX-ACCESS  read-only
        STATUS      current
        DESCRIPTION
            "This object tracks the number of measurements 'N' in a
             report interval."
        ::= { wmanIf2BsUserMetricsEntry 6 }

--
-- Mobile Station connection ID metrics Table
--
wmanIf2BsCidMetricsTable OBJECT-TYPE
        SYNTAX      SEQUENCE OF WmanIf2BsCidMetricsEntry
        MAX-ACCESS  not-accessible
        STATUS      current
        DESCRIPTION
            "This table tracks the number of basic and primary CIDs, and
             the average and maximum number of user CIDs.

             For example:
             T = the number of user CIDs measured in a granularity
                 interval
             N = the number of measurements in a reporting interval

             Avg(N) = the average number of user CIDs
             Avg(0) = T, the 1st sample
             Avg(N) = (Avg(N-1)*(N-1) + T) / N

             Max(N) = the maximum number of user CIDs
             Max(0) = T, the 1st sample
             Max(N) = T if T > Max(N-1)
                     = Max(N-1) if T <= Max(N-1)

             BS should reset all counters after they have been reported
             to EMS via wmanIf2BsPerformanceCountersTrap."
        ::= { wmanIf2BsPm 9 }

wmanIf2BsCidMetricsEntry OBJECT-TYPE
        SYNTAX      WmanIf2BsCidMetricsEntry
        MAX-ACCESS  not-accessible
        STATUS      current
        DESCRIPTION
            "This table provides one row for each BS sector."
        INDEX     { ifIndex }
        ::= { wmanIf2BsCidMetricsTable  1 }

WmanIf2BsCidMetricsEntry ::= SEQUENCE {
        wmanIf2BsBasicAndPrimaryCids            Counter32,
        wmanIf2BsMaximumUserCids                Counter32,
        wmanIf2BsAvgUserCids                    Counter32,
        wmanIf2BsUsersCidMeasurements           Counter32}

wmanIf2BsBasicAndPrimaryCids OBJECT-TYPE
        SYNTAX      Counter32
        MAX-ACCESS  read-only
```



```
        STATUS      current
        DESCRIPTION
            "This object captures the number of basic and primary CIDs
             in a reporting period."
        ::= { wmanIf2BsCidMetricsEntry 1 }

wmanIf2BsMaximumUserCids OBJECT-TYPE
        SYNTAX      Counter32
        MAX-ACCESS  read-only
        STATUS      current
        DESCRIPTION
            "This object records the maximum number of user CIDs Max(N)
             , measured in a reporting interval"
        ::= { wmanIf2BsCidMetricsEntry 2 }

wmanIf2BsAvgUserCids OBJECT-TYPE
        SYNTAX      Counter32
        MAX-ACCESS  read-only
        STATUS      current
        DESCRIPTION
            "This object records the average number of user CIDs Avg(N)
             , measured in a reporting interval"
        ::= { wmanIf2BsCidMetricsEntry 3 }

wmanIf2BsUsersCidMeasurements OBJECT-TYPE
        SYNTAX      Counter32
        MAX-ACCESS  read-only
        STATUS      current
        DESCRIPTION
            "This object tracks the number of measurements 'N' in a
             report interval."
        ::= { wmanIf2BsCidMetricsEntry 4 }

--
-- Mobile Station Service Flow metrics Table
--
wmanIf2BsServiceFlowMetricsTable OBJECT-TYPE
        SYNTAX      SEQUENCE OF WmanIf2BsServiceFlowMetricsEntry
        MAX-ACCESS  not-accessible
        STATUS      current
        DESCRIPTION
            "This table tracks the number of DSx REQ success rate, IP
             address success, and number of SFID allocated. and peak
             DL/UL service flows.

             It also measures maximum UL/DL service flows, and maximum
             and average active / pre-provisioned service flow that
             measured using the formula shown in teh example below.
             For example:
             T = the number of service flows measured in a sample
                 interval

             N = the number of measurements in a reporting interval
```

```
             Avg(N) = the average number of service flows
             Avg(0) = T, the 1st sample
             Avg(N) = (Avg(N-1)*(N-1) + T) / N

             Max(N) = the maximum number of service flows
             Max(0) = T, the 1st sample
             Max(N) = T if T > Max(N-1)
                     = Max(N-1) if T <= Max(N-1)

             BS should reset all counters after they have been reported
             to EMS via wmanIf2BsPerformanceCountersTrap."
        ::= { wmanIf2BsPm 10 }

wmanIf2BsServiceFlowMetricsEntry OBJECT-TYPE
        SYNTAX      WmanIf2BsServiceFlowMetricsEntry
        MAX-ACCESS  not-accessible
        STATUS      current
        DESCRIPTION
            "This table provides one row for each BS sector."
        INDEX     { ifIndex }
        ::= { wmanIf2BsServiceFlowMetricsTable  1 }

WmanIf2BsServiceFlowMetricsEntry ::= SEQUENCE {
        wmanIf2BsDsaReqCount                    Counter32,
        wmanIf2BsDsaReqSuccess                  Counter32,
        wmanIf2BsDsaReqSuccessRate              INTEGER,
        wmanIf2BsDscReqCount                    Counter32,
        wmanIf2BsDscReqSuccess                  Counter32,
        wmanIf2BsDscReqSuccessRate              INTEGER,
        wmanIf2BsDsdReqCount                    Counter32,
        wmanIf2BsDsdReqSuccess                  Counter32,
        wmanIf2BsDsdReqSuccessRate              INTEGER,
        wmanIf2BsMaxActiveServiceFlow           Counter32,
        wmanIf2BsAvgActiveServiceFlow           Counter32,
        wmanIf2BsMaxProvisionedServiceFlow      Counter32,
        wmanIf2BsAvgProvisioneServiceFlow       Counter32,
        wmanIf2BsMaxDlServiceFlow               Counter32,
        wmanIf2BsMaxUlServiceFlow               Counter32,
        wmanIf2BsNumberOfSfidaAllocated         Counter32,
        wmanIf2BsServiceFlowMeasurements        Counter32}

wmanIf2BsDsaReqCount OBJECT-TYPE
        SYNTAX      Counter32
        MAX-ACCESS  read-only
        STATUS      current
        DESCRIPTION
            "This object counts the number of DSA REQ. BS increments the
             counter by one each time the BS sends a DSA-REQ message."
        ::= { wmanIf2BsServiceFlowMetricsEntry 1 }

wmanIf2BsDsaReqSuccess OBJECT-TYPE
        SYNTAX      Counter32
        MAX-ACCESS  read-only
        STATUS      current
```



```
        DESCRIPTION
            "This object counts the number of successful DSA-REQ. BS
             increments the counter by one each time BS receives the
             DSA-RSP with Confirmation Code = OK/success."
        ::= { wmanIf2BsServiceFlowMetricsEntry 2 }

wmanIf2BsDsaReqSuccessRate OBJECT-TYPE
        SYNTAX      INTEGER
        MAX-ACCESS  read-only
        STATUS      current
        DESCRIPTION
            "wmanIf2BsDsaReqSuccessRate % =
             wmanIf2BsDsaReqSuccess / wmanIf2BsDsaReqCount * 100"
        ::= { wmanIf2BsServiceFlowMetricsEntry 3 }

wmanIf2BsDscReqCount OBJECT-TYPE
        SYNTAX      Counter32
        MAX-ACCESS  read-only
        STATUS      current
        DESCRIPTION
            "This object counts the number of DSC REQ. BS increments the
             counter by one each time the BS sends a DSC-REQ message."
        ::= { wmanIf2BsServiceFlowMetricsEntry 4 }

wmanIf2BsDscReqSuccess OBJECT-TYPE
        SYNTAX      Counter32
        MAX-ACCESS  read-only
        STATUS      current
        DESCRIPTION
            "This object counts the number of successful DSC-REQ. BS
             increments the counter by one each time BS receives the
             DSC-RSP with Confirmation Code = OK/success."
        ::= { wmanIf2BsServiceFlowMetricsEntry 5 }

wmanIf2BsDscReqSuccessRate OBJECT-TYPE
        SYNTAX      INTEGER
        MAX-ACCESS  read-only
        STATUS      current
        DESCRIPTION
            "wmanIf2BsDscReqSuccessRate % =
             wmanIf2BsDscReqSuccess / wmanIf2BsDscReqCount * 100"
        ::= { wmanIf2BsServiceFlowMetricsEntry 6 }

wmanIf2BsDsdReqCount OBJECT-TYPE
        SYNTAX      Counter32
        MAX-ACCESS  read-only
        STATUS      current
        DESCRIPTION
            "This object counts the number of DSD REQ. BS increments the
             counter by one each time the BS sends a DSD-REQ message."
        ::= { wmanIf2BsServiceFlowMetricsEntry 7 }

wmanIf2BsDsdReqSuccess OBJECT-TYPE
        SYNTAX      Counter32
```

```
        MAX-ACCESS  read-only
        STATUS      current
        DESCRIPTION
            "This object counts the number of successful DSD-REQ. BS
             increments the counter by one each time BS receives the
             DSD-RSP with Confirmation Code = OK/success."
        ::= { wmanIf2BsServiceFlowMetricsEntry 8 }

wmanIf2BsDsdReqSuccessRate OBJECT-TYPE
        SYNTAX      INTEGER
        MAX-ACCESS  read-only
        STATUS      current
        DESCRIPTION
            "wmanIf2BsDsdReqSuccessRate % =
             wmanIf2BsDsdReqSuccess / wmanIf2BsDsdReqCount * 100"
        ::= { wmanIf2BsServiceFlowMetricsEntry 9 }

wmanIf2BsMaxActiveServiceFlow OBJECT-TYPE
        SYNTAX      Counter32
        MAX-ACCESS  read-only
        STATUS      current
        DESCRIPTION
            "This object records the maximum number of active service
             flow Max(N) (QoS parameter set type = Active state),
             measured in a reporting interval"
        ::= { wmanIf2BsServiceFlowMetricsEntry 10 }

wmanIf2BsAvgActiveServiceFlow OBJECT-TYPE
        SYNTAX      Counter32
        MAX-ACCESS  read-only
        STATUS      current
        DESCRIPTION
            "This object records the average number of active service
             flow Avg(N) (QoS parameter set type = Active state),
             measured in a reporting interval"
        ::= { wmanIf2BsServiceFlowMetricsEntry 11 }

wmanIf2BsMaxProvisionedServiceFlow OBJECT-TYPE
        SYNTAX      Counter32
        MAX-ACCESS  read-only
        STATUS      current
        DESCRIPTION
            "This object records the maximum number of Provisione
             service flow Max(N) (QoS parameter set type = Provisione
             state), measured in a reporting interval"
        ::= { wmanIf2BsServiceFlowMetricsEntry 12 }

wmanIf2BsAvgProvisioneServiceFlow OBJECT-TYPE
        SYNTAX      Counter32
        MAX-ACCESS  read-only
        STATUS      current
        DESCRIPTION
            "This object records the average number of Provisione
             service flow Avg(N) (QoS parameter set type = Provisione
```



```
             state), measured in a reporting interval"
        ::= { wmanIf2BsServiceFlowMetricsEntry 13 }

wmanIf2BsMaxDlServiceFlow OBJECT-TYPE
        SYNTAX      Counter32
        MAX-ACCESS  read-only
        STATUS      current
        DESCRIPTION
            "This object records the maximum number of downlink service
             flow Max(N), measured in a reporting interval"
        ::= { wmanIf2BsServiceFlowMetricsEntry 14 }

wmanIf2BsMaxUlServiceFlow OBJECT-TYPE
        SYNTAX      Counter32
        MAX-ACCESS  read-only
        STATUS      current
        DESCRIPTION
            "This object records the maximum number of uplink service
             flow Max(N), measured in a reporting interval"
        ::= { wmanIf2BsServiceFlowMetricsEntry 15 }

wmanIf2BsNumberOfSfidaAllocated OBJECT-TYPE
        SYNTAX      Counter32
        MAX-ACCESS  read-only
        STATUS      current
        DESCRIPTION
            "This object records the number of SFID being allocated that
             are measured in a reporting interval"
        ::= { wmanIf2BsServiceFlowMetricsEntry 16 }

wmanIf2BsServiceFlowMeasurements OBJECT-TYPE
        SYNTAX      Counter32
        MAX-ACCESS  read-only
        STATUS      current
        DESCRIPTION
            "This object tracks the number of measurements 'N' in a
             report interval."
        ::= { wmanIf2BsServiceFlowMetricsEntry 17 }

--
-- ARQ & HARQ Metrics Table
--
wmanIf2BsArqHarqMetricsTable OBJECT-TYPE
        SYNTAX      SEQUENCE OF WmanIf2BsArqHarqMetricsEntry
        MAX-ACCESS  not-accessible
        STATUS      current
        DESCRIPTION
            "This table contains objects that are used to measure the
             ARQ / HARQ performance. BS should reset all counters after
             they have been reported to EMS via
             wmanIf2BsPerformanceCountersTrap"
        ::= { wmanIf2BsPm 11 }

wmanIf2BsArqHarqMetricsEntry OBJECT-TYPE
```

```
        SYNTAX      WmanIf2BsArqHarqMetricsEntry
        MAX-ACCESS  not-accessible
        STATUS      current
        DESCRIPTION
            "This table provides one row for each BS sector."
        INDEX     { ifIndex }
        ::= { wmanIf2BsArqHarqMetricsTable  1 }

WmanIf2BsArqHarqMetricsEntry ::= SEQUENCE {
        wmanIf2BsDlArqBlocks                    Counter64,
        wmanIf2BsDlArqBlockDropped              Counter32,
        wmanIf2BsDlArqBlockErrorRate            Unsigned32,
        wmanIf2BsDlArqBlockRetransmissions      Counter32,
        wmanIf2BsDlArqBlockEfficiency           Unsigned32,
        wmanIf2BsUlArqBlocks                    Counter64,
        wmanIf2BsUlArqBlockRetransmissions      Counter32,
        wmanIf2BsUlArqBlockEfficiency           Unsigned32,
        wmanIf2BsDlHarqBlocks                   Counter64,
        wmanIf2BsDlHarqBlockDropped             Counter32,
        wmanIf2BsDlHarqBlockErrorRate           Unsigned32,
        wmanIf2BsUlHarqBlocks                   Counter64,
        wmanIf2BsUlHarqBlockDropped             Counter32,
        wmanIf2BsUlHarqBlockErrorRate           Unsigned32}

wmanIf2BsDlArqBlocks OBJECT-TYPE
        SYNTAX      Counter64
        MAX-ACCESS  read-only
        STATUS      current
        DESCRIPTION
            "This object counts the total number of ARQ blocks that a BS
             has sent, including retransmissions."
        ::= { wmanIf2BsArqHarqMetricsEntry 1 }

wmanIf2BsDlArqBlockDropped OBJECT-TYPE
        SYNTAX      Counter32
        MAX-ACCESS  read-only
        STATUS      current
        DESCRIPTION
            "This object counts the total number of ARQ blocks that have
             failed in all retransmissions, and are dropped."
        ::= { wmanIf2BsArqHarqMetricsEntry 2 }

wmanIf2BsDlArqBlockErrorRate OBJECT-TYPE
        SYNTAX      Unsigned32
        UNITS       "1x10E-7"
        MAX-ACCESS  read-only
        STATUS      current
        DESCRIPTION
            "wmanIf2BsDlArqBlockErrorRate = (wmanIf2BsDlArqBlockDropped
             / wmanIf2BsDlArqBlocks) * 10000000"
        ::= { wmanIf2BsArqHarqMetricsEntry 3 }

wmanIf2BsDlArqBlockRetransmissions OBJECT-TYPE
        SYNTAX      Counter32
```



```
        MAX-ACCESS  read-only
        STATUS      current
        DESCRIPTION
            "This object counts the total number of ARQ blocks that a BS
             has retransmitted."
        ::= { wmanIf2BsArqHarqMetricsEntry 4 }

wmanIf2BsDlArqBlockEfficiency OBJECT-TYPE
        SYNTAX      Unsigned32
        UNITS       "1x10E-7"
        MAX-ACCESS  read-only
        STATUS      current
        DESCRIPTION
            "This object measures how many times it takes to send the
             ARQ Blocks on average.
             wmanIf2BsDlArqBlockEfficiency = (
             wmanIf2BsDlArqBlockRetransmission) / wmanIf2BsDlArqBlocks)
             * 10000000"
        ::= { wmanIf2BsArqHarqMetricsEntry 5 }

wmanIf2BsUlArqBlocks OBJECT-TYPE
        SYNTAX      Counter64
        MAX-ACCESS  read-only
        STATUS      current
        DESCRIPTION
            "This object counts the total number of ARQ blocks that a BS
             has received, including transmission blocks."
        ::= { wmanIf2BsArqHarqMetricsEntry 6 }

wmanIf2BsUlArqBlockRetransmissions OBJECT-TYPE
        SYNTAX      Counter32
        MAX-ACCESS  read-only
        STATUS      current
        DESCRIPTION
            "This object counts the total number of ARQ blocks that are
             retransmitted by SS."
        ::= { wmanIf2BsArqHarqMetricsEntry 7 }

wmanIf2BsUlArqBlockEfficiency OBJECT-TYPE
        SYNTAX      Unsigned32
        UNITS       "1x10E-7"
        MAX-ACCESS  read-only
        STATUS      current
        DESCRIPTION
            "This object measures how many times it takes to receive the
             ARQ Blocks on average.
             wmanIf2BsUlArqBlockEfficiency = (
             wmanIf2BsUlArqBlockRetransmission) / wmanIf2BsUlArqBlocks)
             * 10000000"
        ::= { wmanIf2BsArqHarqMetricsEntry 8 }

wmanIf2BsDlHarqBlocks OBJECT-TYPE
        SYNTAX      Counter64
        MAX-ACCESS  read-only
```

```
        STATUS      current
        DESCRIPTION
            "This object counts the total number of HARQ blocks that a
             BS has sent, including retransmissions."
        ::= { wmanIf2BsArqHarqMetricsEntry 9 }

wmanIf2BsDlHarqBlockDropped OBJECT-TYPE
        SYNTAX      Counter32
        MAX-ACCESS  read-only
        STATUS      current
        DESCRIPTION
            "This object counts the total number of HARQ blocks that
             have failed in all retransmissions, and are dropped."
        ::= { wmanIf2BsArqHarqMetricsEntry 10 }

wmanIf2BsDlHarqBlockErrorRate OBJECT-TYPE
        SYNTAX      Unsigned32
        UNITS       "1x10E-7"
        MAX-ACCESS  read-only
        STATUS      current
        DESCRIPTION
            "wmanIf2BsDlHarqBlockErrorRate = (
             wmanIf2BsDlHarqBlockDropped / wmanIf2BsDlHarqBlocks) *
             10000000"
        ::= { wmanIf2BsArqHarqMetricsEntry 11 }

wmanIf2BsUlHarqBlocks OBJECT-TYPE
        SYNTAX      Counter64
        MAX-ACCESS  read-only
        STATUS      current
        DESCRIPTION
            "This object counts the total number of HARQ blocks that a
             BS has received, including transmission blocks."
        ::= { wmanIf2BsArqHarqMetricsEntry 12 }

wmanIf2BsUlHarqBlockDropped OBJECT-TYPE
        SYNTAX      Counter32
        MAX-ACCESS  read-only
        STATUS      current
        DESCRIPTION
            "This object counts the total number of HARQ blocks that
             have failed in all retransmissions, and are dropped."
        ::= { wmanIf2BsArqHarqMetricsEntry 13 }

wmanIf2BsUlHarqBlockErrorRate OBJECT-TYPE
        SYNTAX      Unsigned32
        UNITS       "1x10E-7"
        MAX-ACCESS  read-only
        STATUS      current
        DESCRIPTION
            "wmanIf2BsUlHarqBlockErrorRate = (
             wmanIf2BsUlHarqBlockDropped / wmanIf2BsUlHarqBlocks) *
             10000000"
        ::= { wmanIf2BsArqHarqMetricsEntry 14 }
```



```
--
-- Base Station Authentication Metrics Table
--
wmanIf2BsAuthenticationMetricsTable OBJECT-TYPE
        SYNTAX      SEQUENCE OF WmanIf2BsAuthenticationMetricsEntry
        MAX-ACCESS  not-accessible
        STATUS      current
        DESCRIPTION
            "This table contain counters to count on receipt of
             non-authentic messages so that an active attack can be
             detected.

             BS should reset all counters after they have been reported
             to EMS via wmanIf2BsPerformanceCountersTrap."
        ::= { wmanIf2BsPm 12 }

wmanIf2BsAuthenticationMetricsEntry OBJECT-TYPE
        SYNTAX      WmanIf2BsAuthenticationMetricsEntry
        MAX-ACCESS  not-accessible
        STATUS      current
        DESCRIPTION
            "This table provides one row for each BS sector."
        INDEX     { ifIndex }
        ::= { wmanIf2BsAuthenticationMetricsTable 1 }

WmanIf2BsAuthenticationMetricsEntry ::= SEQUENCE {
        wmanIf2BsHmacUnauthenticated            Counter32,
        wmanIf2BsCmacUnauthenticated            Counter32,
        wmanIf2BsShortHmacUnauthenticated       Counter32}

wmanIf2BsHmacUnauthenticated OBJECT-TYPE
        SYNTAX      Counter32
        MAX-ACCESS  read-only
        STATUS      current
        DESCRIPTION
            "BS increments this counter by 1, each time it receives an
             unauthenticated HMAC message."
        ::= { wmanIf2BsAuthenticationMetricsEntry 1 }

wmanIf2BsCmacUnauthenticated OBJECT-TYPE
        SYNTAX      Counter32
        MAX-ACCESS  read-only
        STATUS      current
        DESCRIPTION
            "BS increments this counter by 1, each time it receives an
             unauthenticated CMAC message."
        ::= { wmanIf2BsAuthenticationMetricsEntry 2 }

wmanIf2BsShortHmacUnauthenticated OBJECT-TYPE
        SYNTAX      Counter32
        MAX-ACCESS  read-only
        STATUS      current
        DESCRIPTION
```

```
            "BS increments this counter by 1, each time it receives an
             unauthenticated short HMAC message."
        ::= { wmanIf2BsAuthenticationMetricsEntry 3 }

--
-- wmanIf2BsSm group - containing tables and objects related to Security
--                     Management (i.e. Privacy Sublayer objects)
--
wmanIf2BsPkmSecurityCapabilityTable OBJECT-TYPE
        SYNTAX      SEQUENCE OF WmanIf2BsPkmSecurityCapabilityEntry
        MAX-ACCESS  not-accessible
        STATUS      current
        DESCRIPTION
            "This table contains the list of the cryptographic
             suite(s) an BS supports."
        REFERENCE
            "Subclause 11.9.13"
        ::= { wmanIf2BsSm 1 }

wmanIf2BsPkmSecurityCapabilityEntry OBJECT-TYPE
        SYNTAX      WmanIf2BsPkmSecurityCapabilityEntry
        MAX-ACCESS  not-accessible
        STATUS      current
        DESCRIPTION
            ""
        INDEX     { ifIndex,
                    wmanIf2BsPkmSecurityCapIndex }
        ::= { wmanIf2BsPkmSecurityCapabilityTable  1 }

WmanIf2BsPkmSecurityCapabilityEntry ::= SEQUENCE {
        wmanIf2BsPkmSecurityCapIndex            Integer32,
        wmanIf2BsPkmScDataEncryptAlgorithm      WmanIf2DataEncryptAlgId,
        wmanIf2BsPkmScDataAuthentAlgorithm      WmanIf2DataAuthAlgId,
        wmanIf2BsPkmScEncryptAlgorithm          WmanIf2TekEncryptAlgId}

wmanIf2BsPkmSecurityCapIndex OBJECT-TYPE
        SYNTAX      Integer32 (1 .. 65535)
        MAX-ACCESS  not-accessible
        STATUS      current
        DESCRIPTION
            "The index value which uniquely identifies an entry
             in the wmanIf2BsPkmSecurityCapabilityTable"
        ::= { wmanIf2BsPkmSecurityCapabilityEntry 1 }

wmanIf2BsPkmScDataEncryptAlgorithm OBJECT-TYPE
        SYNTAX      WmanIf2DataEncryptAlgId
        MAX-ACCESS  read-only
        STATUS      current
        DESCRIPTION
            "The value of this object is the data encryption algorithm
             being utilized."
        REFERENCE
             "Table 597"
        ::= { wmanIf2BsPkmSecurityCapabilityEntry 2 }
```



```
wmanIf2BsPkmScDataAuthentAlgorithm OBJECT-TYPE
        SYNTAX      WmanIf2DataAuthAlgId
        MAX-ACCESS  read-only
        STATUS      current
        DESCRIPTION
            "The value of this object is the data authentication
             algorithm being utilized."
        REFERENCE
             "Table 598"
        ::= { wmanIf2BsPkmSecurityCapabilityEntry 3 }

wmanIf2BsPkmScEncryptAlgorithm OBJECT-TYPE
        SYNTAX      WmanIf2TekEncryptAlgId
        MAX-ACCESS  read-only
        STATUS      current
        DESCRIPTION
            "The value of this object is the TEK key encryption
             algorithm being utilized."
        REFERENCE
             "Table 599"
        ::= { wmanIf2BsPkmSecurityCapabilityEntry 4 }

--
-- Table wmanIf2BsSsPkmSecurityCapabilityTable
--
wmanIf2BsSsPkmSecurityCapabilityTable OBJECT-TYPE
        SYNTAX      SEQUENCE OF WmanIf2BsSsPkmSecurityCapabilityEntry
        MAX-ACCESS  not-accessible
        STATUS      current
        DESCRIPTION
            "This table contains the SS's Security Capabilities that are
             conveyed by the Auth Request or PKMv2 SA-TEK-Request
             message. It contains the list of the cryptographic suite(s)
             an SS supports."
        REFERENCE
            "Subclause 11.9.13 and Table 596"
        ::= { wmanIf2BsSm 2 }

wmanIf2BsSsPkmSecurityCapabilityEntry OBJECT-TYPE
        SYNTAX      WmanIf2BsSsPkmSecurityCapabilityEntry
        MAX-ACCESS  not-accessible
        STATUS      current
        DESCRIPTION
            ""
        INDEX     { ifIndex,
                    wmanIf2BsSsMacAddress,
                    wmanIf2BsSsPkmSecurityCapIndex }
        ::= { wmanIf2BsSsPkmSecurityCapabilityTable  1 }

WmanIf2BsSsPkmSecurityCapabilityEntry ::= SEQUENCE {
        wmanIf2BsSsPkmSecurityCapIndex          Integer32,
        wmanIf2BsSsPkmScDataEncryptAlgorithm    WmanIf2DataEncryptAlgId,
        wmanIf2BsSsPkmScDataAuthentAlgorithm    WmanIf2DataAuthAlgId,
```

```
        wmanIf2BsSsPkmScEncryptAlgorithm        WmanIf2TekEncryptAlgId}

wmanIf2BsSsPkmSecurityCapIndex OBJECT-TYPE
        SYNTAX      Integer32 (1 .. 65535)
        MAX-ACCESS  not-accessible
        STATUS      current
        DESCRIPTION
            "The index value which uniquely identifies an entry
             in the wmanIf2BsSsPkmSecurityCapabilityTable"
        ::= { wmanIf2BsSsPkmSecurityCapabilityEntry 1 }

wmanIf2BsSsPkmScDataEncryptAlgorithm OBJECT-TYPE
        SYNTAX      WmanIf2DataEncryptAlgId
        MAX-ACCESS  read-only
        STATUS      current
        DESCRIPTION
            "The value of this object is the data encryption algorithm
             being utilized."
        REFERENCE
             "Table 597"
        ::= { wmanIf2BsSsPkmSecurityCapabilityEntry 2 }

wmanIf2BsSsPkmScDataAuthentAlgorithm OBJECT-TYPE
        SYNTAX      WmanIf2DataAuthAlgId
        MAX-ACCESS  read-only
        STATUS      current
        DESCRIPTION
            "The value of this object is the data authentication
             algorithm being utilized."
        REFERENCE
             "Table 598"
        ::= { wmanIf2BsSsPkmSecurityCapabilityEntry 3 }

wmanIf2BsSsPkmScEncryptAlgorithm OBJECT-TYPE
        SYNTAX      WmanIf2TekEncryptAlgId
        MAX-ACCESS  read-only
        STATUS      current
        DESCRIPTION
            "The value of this object is the TEK key encryption
             algorithm being utilized."
        REFERENCE
             "Table 599"
        ::= { wmanIf2BsSsPkmSecurityCapabilityEntry 4 }

wmanIf2BsPkmV1Objects OBJECT IDENTIFIER ::= { wmanIf2BsSm 3 }

--
-- Table wmanIf2BsPkmV1ConfigTable
--
wmanIf2BsPkmV1ConfigTable OBJECT-TYPE
        SYNTAX      SEQUENCE OF WmanIf2BsPkmV1ConfigEntry
        MAX-ACCESS  not-accessible
        STATUS      current
        DESCRIPTION
```



```
            "This table contains the configuration of the PKM
             attributes that are to be used for BS and SS."
        REFERENCE
            "Subclause 10.2, Table 554"
        ::= { wmanIf2BsPkmV1Objects  1 }

wmanIf2BsPkmV1ConfigEntry OBJECT-TYPE
        SYNTAX      WmanIf2BsPkmV1ConfigEntry
        MAX-ACCESS  not-accessible
        STATUS      current
        DESCRIPTION
            "Each entry contains objects that define the PKM attributes
             of each BS wireless interface, and all SSs that are
             connected with such BS."
        INDEX     { ifIndex }
        ::= { wmanIf2BsPkmV1ConfigTable  1 }

WmanIf2BsPkmV1ConfigEntry ::= SEQUENCE {
        wmanIf2BsPkmV1AkLifetime                Integer32,
        wmanIf2BsPkmV1TekLifetime               Integer32,
        wmanIf2BsPkmV1SelfSigManufCertTrust     Integer32,
        wmanIf2BsPkmV1AuthWaitTimeout           Integer32,
        wmanIf2BsPkmV1ReauthWaitTimeout         Integer32,
        wmanIf2BsPkmV1AuthGraceTime             Integer32,
        wmanIf2BsPkmV1OpWaitTimeout             Integer32,
        wmanIf2BsPkmV1RekeyWaitTimeout          Integer32,
        wmanIf2BsPkmV1TekGraceTime              Integer32,
        wmanIf2BsPkmV1AuthRejectWaitTimeout     Integer32,
        wmanIf2BsPkmV1CheckCertValidityPeriods  TruthValue}

wmanIf2BsPkmV1AkLifetime OBJECT-TYPE
        SYNTAX      Integer32 (86400 .. 6048000)
        UNITS       "seconds"
        MAX-ACCESS  read-write
        STATUS      current
        DESCRIPTION
            "This object defines the lifetime of a newly assigned
             authorization key."
        DEFVAL         { 604800 }
        ::= { wmanIf2BsPkmV1ConfigEntry 1 }

wmanIf2BsPkmV1TekLifetime OBJECT-TYPE
        SYNTAX      Integer32 (1800 .. 604800)
        UNITS       "seconds"
        MAX-ACCESS  read-write
        STATUS      current
        DESCRIPTION
            "This object defines the lifetime of a newly assigned
             Traffic Encryption Key(TEK)."
        DEFVAL         { 43200 }
        ::= { wmanIf2BsPkmV1ConfigEntry 2 }

wmanIf2BsPkmV1SelfSigManufCertTrust OBJECT-TYPE
        SYNTAX      INTEGER {trusted (1),
```

```
                            untrusted (2)}
        MAX-ACCESS  read-write
        STATUS      current
        DESCRIPTION
            "This object determines the default trust of all (new)
             self-signed manufacturer certificates obtained after
             setting the object."
        ::= { wmanIf2BsPkmV1ConfigEntry 3 }

wmanIf2BsPkmV1AuthWaitTimeout OBJECT-TYPE
        SYNTAX      Integer32 (2 .. 30)
        UNITS       "seconds"
        MAX-ACCESS  read-write
        STATUS      current
        DESCRIPTION
            "This object defines the Auth Req retransmission interval
             from Auth Wait state. It is sent to SS via Auth Reply,
             PMKv2-RSA reply, or PKMv2-SA-TEK response messages."
        REFERENCE
            "Subclause 11.9.18.1, Table 554"
        DEFVAL      { 10 }
        ::= { wmanIf2BsPkmV1ConfigEntry 4 }

wmanIf2BsPkmV1ReauthWaitTimeout OBJECT-TYPE
        SYNTAX      Integer32 (2 .. 30)
        UNITS       "seconds"
        MAX-ACCESS  read-write
        STATUS      current
        DESCRIPTION
            "This object defines the Auth Req retransmission interval
             from Reauth Wait state. It is sent to SS via Auth Reply,
             PMKv2-RSA reply, or PKMv2-SA-TEK response messages."
        REFERENCE
            "Subclause 11.9.18.2, Table 554"
        DEFVAL      { 10 }
        ::= { wmanIf2BsPkmV1ConfigEntry 5 }

wmanIf2BsPkmV1AuthGraceTime OBJECT-TYPE
        SYNTAX      Integer32 (300 .. 3024000)
        UNITS       "seconds"
        MAX-ACCESS  read-write
        STATUS      current
        DESCRIPTION
            "The value of this object is the grace time for an
             authorization key. A SS is expected to start trying to get
             a new authorization key beginning AuthGraceTime seconds
            before the authorization key actually expires. It is sent to
             SS via Auth Reply, PMKv2-RSA reply, or PKMv2-SA-TEK
             response messages."
        REFERENCE
            "Subclause 11.9.18.3, Table 554"
        DEFVAL      { 600 }
        ::= { wmanIf2BsPkmV1ConfigEntry 6 }
```



```
wmanIf2BsPkmV1OpWaitTimeout OBJECT-TYPE
        SYNTAX      Integer32 (1 .. 10)
        UNITS       "seconds"
        MAX-ACCESS  read-write
        STATUS      current
        DESCRIPTION
            "This object defines the Key Req retransmission interval
             from Op Wait state. It is sent to SS via Auth Reply,
             PMKv2-RSA reply, or PKMv2-SA-TEK response messages."
        REFERENCE
            "Subclause 11.9.18.4, Table 554"
        DEFVAL      { 1 }
        ::= { wmanIf2BsPkmV1ConfigEntry 7 }

wmanIf2BsPkmV1RekeyWaitTimeout OBJECT-TYPE
        SYNTAX      Integer32 (1 .. 10)
        UNITS       "seconds"
        MAX-ACCESS  read-write
        STATUS      current
        DESCRIPTION
            "This object defines the Key Req retransmission interval
             from Rekey Wait state. It is sent to SS via Auth Reply,
             PMKv2-RSA reply, or PKMv2-SA-TEK response messages."
        REFERENCE
            "Subclause 11.9.18.5, Table 554"
        DEFVAL      { 1 }
        ::= { wmanIf2BsPkmV1ConfigEntry 8 }

wmanIf2BsPkmV1TekGraceTime OBJECT-TYPE
        SYNTAX      Integer32 (300 .. 3024000)
        UNITS       "seconds"
        MAX-ACCESS  read-write
        STATUS      current
        DESCRIPTION
            "The value of this object is the grace time for the TEK in
             seconds. The SS is expected to start trying to acquire a
             new TEK beginning TEK GraceTime seconds before the
             expiration of the most recent TEK. It is sent to SS via
             Auth Reply, PMKv2-RSA reply, or PKMv2-SA-TEK response
             messages."
        REFERENCE
            "Subclause 11.9.18.6, Table 554"
        DEFVAL      { 3600 }
        ::= { wmanIf2BsPkmV1ConfigEntry 9 }

wmanIf2BsPkmV1AuthRejectWaitTimeout OBJECT-TYPE
        SYNTAX      Integer32 (10 .. 600)
        UNITS       "seconds"
        MAX-ACCESS  read-write
        STATUS      current
        DESCRIPTION
            "This object defines the Delay before resending Auth Request
             after receiving Auth Reject. It is sent to SS via Auth
             Reply,PMKv2-RSA reply, or PKMv2-SA-TEK response messages."
```

```
        REFERENCE
            "Subclause 11.9.18.7, Table 554"
        DEFVAL      { 60 }
        ::= { wmanIf2BsPkmV1ConfigEntry 10 }

wmanIf2BsPkmV1CheckCertValidityPeriods OBJECT-TYPE
        SYNTAX      TruthValue
        MAX-ACCESS  read-write
        STATUS      current
        DESCRIPTION
            "Setting this object to TRUE causes all certificates
             received thereafter to have their validity periods (and
             their chain's validity periods) checked against the current
             time of day. A FALSE setting will cause all certificates
             received Thereafter to not have their validity periods
             (nor their chain's validity periods) checked against the
             current time of day."
        ::= { wmanIf2BsPkmV1ConfigEntry 11 }

--
-- Table wmanIf2BsSsPkmV1AuthorizationTable
--
wmanIf2BsSsPkmV1AuthorizationTable OBJECT-TYPE
        SYNTAX      SEQUENCE OF WmanIf2BsSsPkmV1AuthorizationEntry
        MAX-ACCESS  not-accessible
        STATUS      current
        DESCRIPTION
            "This table contains information related to SS's
             authorization process."
        REFERENCE
            "Table 52 and 60"
        ::= { wmanIf2BsPkmV1Objects 2 }

wmanIf2BsSsPkmV1AuthorizationEntry OBJECT-TYPE
        SYNTAX      WmanIf2BsSsPkmV1AuthorizationEntry
        MAX-ACCESS  not-accessible
        STATUS      current
        DESCRIPTION
            "Each entry contains objects that define the SS
             authorization attributes for each SS associated with each
             BS sector."
        INDEX     { ifIndex, wmanIf2BsSsPkmV1AuthMacAddress }
        ::= { wmanIf2BsSsPkmV1AuthorizationTable  1 }

WmanIf2BsSsPkmV1AuthorizationEntry ::= SEQUENCE {
        wmanIf2BsSsPkmV1AuthMacAddress          MacAddress,
        wmanIf2BsSsPkmV1CaCertificate           OCTET STRING,
        wmanIf2BsSsPkmV1SsCertificate           OCTET STRING,
        wmanIf2BsSsPkmV1PrimarySaId             Integer32,
        wmanIf2BsSsPkmV1AuthKeySequenceNumber   Integer32,
        wmanIf2BsSsPkmV1AuthKeyLifetime         Integer32,
        wmanIf2BsSsPkmV1AuthRejectError         WmanIf2PkmErrorCode,
        wmanIf2BsSsPkmV1AuthInvalidError        WmanIf2PkmErrorCode,
        wmanIf2BsSsPkmV1AkN-1ExpireTime         DateAndTime,
```



```
        wmanIf2BsSsPkmV1AkNExpireTime           DateAndTime,
        wmanIf2BsSsPkmV1CertificateStatus       WmanIf2CertificateStat,
        wmanIf2BsSsPkmV1AuthReset               Integer32}

wmanIf2BsSsPkmV1AuthMacAddress OBJECT-TYPE
        SYNTAX      MacAddress
        MAX-ACCESS  not-accessible
        STATUS      current
        DESCRIPTION
            "The value of this object is the physical address of the SS
             to which the authorization association applies."
        ::= { wmanIf2BsSsPkmV1AuthorizationEntry 1 }

wmanIf2BsSsPkmV1CaCertificate OBJECT-TYPE
        SYNTAX      OCTET STRING (SIZE(0..65535))
        MAX-ACCESS  read-only
        STATUS      current
        DESCRIPTION
            "SS sends the CA-Certificate in the Auth Info message. It
             contains an X.509 CA certificate for the manufacturer of
             the SS. The SS's X.509 user certificate shall have been
             issued by the CA identified by the X.509 CA certificate."
        REFERENCE
            "Table 60"
        ::= { wmanIf2BsSsPkmV1AuthorizationEntry 2 }

wmanIf2BsSsPkmV1SsCertificate OBJECT-TYPE
        SYNTAX      OCTET STRING (SIZE(0..65535))
        MAX-ACCESS  read-only
        STATUS      current
        DESCRIPTION
            "SS sends the SS-Certificate in the Auth Request message.
             It contains an X.509 SS certificate issued by the SS's
             manufacturer. The SS's X.509 certificate is a public-key
             certificate which binds the SS's identifying information
             to its RSA public key in a verifiable manner. The X.509
             certificate is digitally signed by the SS's manufacturer,
             and that signature can be verified by a BS that knows
             the manufacturer's public key. The manufacturer's public
             key is placed in an X.509 certification authority (CA)
             certificate, which in turn is signed by a higher level CA."
        REFERENCE
            "Table 52"
        ::= { wmanIf2BsSsPkmV1AuthorizationEntry 3 }

wmanIf2BsSsPkmV1PrimarySaId OBJECT-TYPE
        SYNTAX      Integer32 (0..65535)
        MAX-ACCESS  read-only
        STATUS      current
        DESCRIPTION
            "SS's primary SAID equal to the Basic CID."
        REFERENCE
             "Table 52"
        ::= { wmanIf2BsSsPkmV1AuthorizationEntry 4 }
```

```
wmanIf2BsSsPkmV1AuthKeySequenceNumber OBJECT-TYPE
        SYNTAX      Integer32 (0 .. 15)
        MAX-ACCESS  read-only
        STATUS      current
        DESCRIPTION
            "This object provides the most recent authorization key
             sequence number in the Auth Reply message for an SS."
        REFERENCE
             "Table 53"
        ::= { wmanIf2BsSsPkmV1AuthorizationEntry 5 }

wmanIf2BsSsPkmV1AuthKeyLifetime OBJECT-TYPE
        SYNTAX      Integer32 (86400 .. 6048000)
        UNITS       "seconds"
        MAX-ACCESS  read-only
        STATUS      current
        DESCRIPTION
            "This object defines the lifetime of an authorization
             key (AK) the BS assigns to a SS."
        REFERENCE
             "Table 554"
        ::= { wmanIf2BsSsPkmV1AuthorizationEntry 6 }

wmanIf2BsSsPkmV1AuthRejectError OBJECT-TYPE
        SYNTAX      WmanIf2PkmErrorCode
        MAX-ACCESS  read-only
        STATUS      current
        DESCRIPTION
            "The Error Code in most recent Authorization Reject message
             transmitted to the SS.

             The valid codes are:
               0 - no failure
               1 - unauthorized SS
               2 - unauthorized SAID
               6..11 - permanent authorization failure"
        REFERENCE
             "Table 595 Subclause 11.9.10"
        ::= { wmanIf2BsSsPkmV1AuthorizationEntry 7 }

wmanIf2BsSsPkmV1AuthInvalidError OBJECT-TYPE
        SYNTAX      WmanIf2PkmErrorCode
        MAX-ACCESS  read-only
        STATUS      current
        DESCRIPTION
            "The Error Code in most recent Authorization Invalid message
             transmitted to the SS.

             The valid codes are:
               0 - no failure
               1 - unauthorized SS
               3 - unsolicited
               4 - invalid key sequence
```



```
                5 - key request authentication failure"

        REFERENCE
             "Table 595 Subclause 11.9.10"
        ::= { wmanIf2BsSsPkmV1AuthorizationEntry 8 }

wmanIf2BsSsPkmV1AkN-1ExpireTime OBJECT-TYPE
        SYNTAX      DateAndTime
        MAX-ACCESS  read-only
        STATUS      current
        DESCRIPTION
            "This object is the time when AK(N-1) expires.
             wmanIf2BsSsPkmV1AkN-1ExpireTime =
                Auth Reply[AK(N-1)] arrival time +  AK(N-1) lifetime

             If this FSM has only one authorization key, then
             wmanIf2BsSsPkmV1AkN-1ExpireTime = the activation of FSM."
        ::= { wmanIf2BsSsPkmV1AuthorizationEntry 9 }

wmanIf2BsSsPkmV1AkNExpireTime OBJECT-TYPE
        SYNTAX      DateAndTime
        MAX-ACCESS  read-only
        STATUS      current
        DESCRIPTION
            "This object is the time when AK(N) expires.
             wmanIf2BsSsPkmV1AkNExpireTime =
             Auth Reply[AK(N)] arrival time +  AK(N) lifetime

             If this FSM has only one authorization key, then
             wmanIf2BsSsPkmV1AkNExpireTime = the activation of FSM."
        ::= { wmanIf2BsSsPkmV1AuthorizationEntry 10 }

wmanIf2BsSsPkmV1CertificateStatus OBJECT-TYPE
        SYNTAX      WmanIf2CertificateStat
        MAX-ACCESS  read-only
        STATUS      current
        DESCRIPTION
            "Indicate the reason why a SS's certificate is deemed valid
             or invalid."
        ::= { wmanIf2BsSsPkmV1AuthorizationEntry 11 }

wmanIf2BsSsPkmV1AuthReset OBJECT-TYPE
        SYNTAX      INTEGER {noResetRequested(1),
                             invalidateAuth(2),
                             sendAuthInvalid(3),
                             invalidateTeks(4)}
        MAX-ACCESS  read-write
        STATUS      current
        DESCRIPTION
            "Setting this object to:
               1 - no reset
               2 - causes the BS to invalidate the current SS
                   authorization key(s), but not to transmit an
                   Authorization Invalid message nor to invalidate
```

```
                    unicast TEKs.
                3 - causes the BS to invalidate the current SS
                    authorization key(s), and to transmit an
                    Authorization Invalid message to the SS, but not
                    to invalidate unicast TEKs.
                4 - causes the BS to invalidate the current SS
                    authorization key(s), to transmit an Authorization
                    Invalid message to the SS, and to invalidate all
                    unicast TEKs associated with this SS authorization.
             Reading this object returns the most-recently-set value
             of this object, or returns noResetRequested(1) if the
             object has not been set since the last BS reboot."
        ::= { wmanIf2BsSsPkmV1AuthorizationEntry 12 }

--
-- Table wmanIf2BsSsPkmV1TekTable
--
wmanIf2BsSsPkmV1TekTable OBJECT-TYPE
        SYNTAX      SEQUENCE OF WmanIf2BsSsPkmV1TekEntry
        MAX-ACCESS  not-accessible
        STATUS      current
        DESCRIPTION
            "This table contains the TEK attributes that are associated
             with each SAID."
        ::= { wmanIf2BsPkmV1Objects 3 }

wmanIf2BsSsPkmV1TekEntry OBJECT-TYPE
        SYNTAX      WmanIf2BsSsPkmV1TekEntry
        MAX-ACCESS  not-accessible
        STATUS      current
        DESCRIPTION
            ""
        INDEX     { ifIndex,
                    wmanIf2BsSsMacAddress,
                    wmanIf2BsSsPkmV1SaidIndex }
        ::= { wmanIf2BsSsPkmV1TekTable  1 }

WmanIf2BsSsPkmV1TekEntry ::= SEQUENCE {
        wmanIf2BsSsPkmV1SaidIndex               Integer32,
        wmanIf2BsSsPkmV1SaType                  WmanIf2SaType,
        wmanIf2BsSsPkmV1TekDataEncryptAlgorithm WmanIf2DataEncryptAlgId,
        wmanIf2BsSsPkmV1TekDataAuthentAlgorithm WmanIf2DataAuthAlgId,
        wmanIf2BsSsPkmV1TekEncryptAlgorithm     WmanIf2TekEncryptAlgId,
        wmanIf2BsSsPkmV1TekN-1SequenceNumber    Integer32,
        wmanIf2BsSsPkmV1TekN-1Lifetime          Integer32,
        wmanIf2BsSsPkmV1TekNSequenceNumber      Integer32,
        wmanIf2BsSsPkmV1TekNLifetime            Integer32,
        wmanIf2BsSsPkmV1KeyRejectError          WmanIf2PkmErrorCode,
        wmanIf2BsSsPkmV1TekInvalidError         WmanIf2PkmErrorCode,
        wmanIf2BsSsPkmV1TekN-1ExpireTime        DateAndTime,
        wmanIf2BsSsPkmV1TekNExpireTime          DateAndTime,
        wmanIf2BsSsPkmV1TekReset                TruthValue}

wmanIf2BsSsPkmV1SaidIndex OBJECT-TYPE
```



```
        SYNTAX      Integer32 (0 .. 65535)
        MAX-ACCESS  not-accessible
        STATUS      current
        DESCRIPTION
            "SAID index to the wmanIf2BsSsPkmV1TekTable."
        ::= { wmanIf2BsSsPkmV1TekEntry 1 }

wmanIf2BsSsPkmV1SaType OBJECT-TYPE
        SYNTAX      WmanIf2SaType
        MAX-ACCESS  read-only
        STATUS      current
        DESCRIPTION
            "SA Type attribute that is included in the Auth Reply
             message."
        ::= { wmanIf2BsSsPkmV1TekEntry 2 }

wmanIf2BsSsPkmV1TekDataEncryptAlgorithm OBJECT-TYPE
        SYNTAX      WmanIf2DataEncryptAlgId
        MAX-ACCESS  read-only
        STATUS      current
        DESCRIPTION
            "The data encryption algorithm attribute that is included
             in the Auth Reply message."
        REFERENCE
             "Table 597"
        ::= { wmanIf2BsSsPkmV1TekEntry 3 }

wmanIf2BsSsPkmV1TekDataAuthentAlgorithm OBJECT-TYPE
        SYNTAX      WmanIf2DataAuthAlgId
        MAX-ACCESS  read-only
        STATUS      current
        DESCRIPTION
            "The data authentication algorithm attribute that is
             included in the Auth Reply message."
        REFERENCE
             "Table 598"
        ::= { wmanIf2BsSsPkmV1TekEntry 4 }

wmanIf2BsSsPkmV1TekEncryptAlgorithm OBJECT-TYPE
        SYNTAX      WmanIf2TekEncryptAlgId
        MAX-ACCESS  read-only
        STATUS      current
        DESCRIPTION
            "The TEK key encryption algorithm attribute that is
             included in the Auth Reply message."
        REFERENCE
             "Table 599"
        ::= { wmanIf2BsSsPkmV1TekEntry 5 }

wmanIf2BsSsPkmV1TekN-1SequenceNumber OBJECT-TYPE
        SYNTAX      Integer32 (0 .. 3)
        MAX-ACCESS  read-only
        STATUS      current
        DESCRIPTION
```

```
            "At all times the BS maintains two sets of active
             generations of keying material per SAID. One set
             corresponds to the 'N-1' generation of keying material,
             the second set corresponds to the 'N' generation of
             keying material. The N generation has a key sequence
             number one greater than (modulo 4) that of the N-1
             generation. This object provides the older TEK sequence
             number in the Key Reply message for an SS."
        REFERENCE
             "Subclause 11.9.8"
        ::= { wmanIf2BsSsPkmV1TekEntry 6 }

wmanIf2BsSsPkmV1TekN-1Lifetime OBJECT-TYPE
        SYNTAX      Integer32 (1800 .. 604800)
        UNITS       "seconds"
        MAX-ACCESS  read-only
        STATUS      current
        DESCRIPTION
            "This object provides the N-1 TEK Remaining Lifetime."
        REFERENCE
            "Subclause 11.9.8"
        ::= { wmanIf2BsSsPkmV1TekEntry 7 }

wmanIf2BsSsPkmV1TekNSequenceNumber OBJECT-TYPE
        SYNTAX      Integer32 (0 .. 3)
        MAX-ACCESS  read-only
        STATUS      current
        DESCRIPTION
            "This object provides the N TEK sequence number in the
             Key Reply message for an SS."
        REFERENCE
             "Subclause 11.9.8"
        ::= { wmanIf2BsSsPkmV1TekEntry 8 }

wmanIf2BsSsPkmV1TekNLifetime OBJECT-TYPE
        SYNTAX      Integer32 (1800 .. 604800)
        UNITS       "seconds"
        MAX-ACCESS  read-only
        STATUS      current
        DESCRIPTION
            "This object provides the N TEK Remaining Lifetime."
        REFERENCE
            "Subclause 11.9.8"
        ::= { wmanIf2BsSsPkmV1TekEntry 9 }

wmanIf2BsSsPkmV1KeyRejectError OBJECT-TYPE
        SYNTAX      WmanIf2PkmErrorCode
        MAX-ACCESS  read-only
        STATUS      current
        DESCRIPTION
            "The Error Code in the most recent Key Reject message sent
             in response to a Key Request for this SAID.

             The valid error codes are:
```



```
                0 - no failure
                2 - unauthorized SAID"
        REFERENCE
             "Table 595"
        ::= { wmanIf2BsSsPkmV1TekEntry 10 }

wmanIf2BsSsPkmV1TekInvalidError OBJECT-TYPE
        SYNTAX      WmanIf2PkmErrorCode
        MAX-ACCESS  read-only
        STATUS      current
        DESCRIPTION
            "The Error Code in the most recent TEK Invalid message sent
             in association with this SAID.

             The valid error codes are:
                0 - no failure
                4 - invalid key sequence"
        REFERENCE
             "Table 595"
        ::= { wmanIf2BsSsPkmV1TekEntry 11 }

wmanIf2BsSsPkmV1TekN-1ExpireTime OBJECT-TYPE
        SYNTAX      DateAndTime
        MAX-ACCESS  read-only
        STATUS      current
        DESCRIPTION
            "This object is the time when TEK(N-1) expires.
             wmanIf2BsSsPkmV1TekN-1ExpireTime =
                 Key Reply[TEK(N-1)] arrival time +  TEK(N-1) lifetime

             If this FSM has only one authorization key, then
             wmanIf2BsSsPkmV1TekN-1ExpireTime = the activation of FSM."
        ::= { wmanIf2BsSsPkmV1TekEntry 12 }

wmanIf2BsSsPkmV1TekNExpireTime OBJECT-TYPE
        SYNTAX      DateAndTime
        MAX-ACCESS  read-only
        STATUS      current
        DESCRIPTION
            "This object is the time when TEK(N) expires.
             wmanIf2BsSsPkmV1TekNExpireTime =
                 Key Reply[TEK(N)] arrival time +  TEK(N) lifetime

             If this FSM has only one authorization key, then
             wmanIf2BsSsPkmV1TekNExpireTime = the activation of FSM."
        ::= { wmanIf2BsSsPkmV1TekEntry 13 }

wmanIf2BsSsPkmV1TekReset OBJECT-TYPE
        SYNTAX      TruthValue
        MAX-ACCESS  read-write
        STATUS      current
        DESCRIPTION
            "Setting this object to TRUE causes the BS to invalidate
             the current active TEK(s) (plural due to key transition
```

```
             periods), and to generate a new TEK for the associated
             SAID; the BS MAY also generate an unsolicited TEK Invalid
             message, to optimize the TEK synchronization between the BS
             and the SS. Reading this object always returns FALSE."
        ::= { wmanIf2BsSsPkmV1TekEntry 14 }

wmanIf2BsPkmV2Objects OBJECT IDENTIFIER ::= { wmanIf2BsSm 4 }

--
-- Table wmanIf2BsPkmV2ConfigTable
--
wmanIf2BsPkmV2ConfigTable OBJECT-TYPE
        SYNTAX      SEQUENCE OF WmanIf2BsPkmV2ConfigEntry
        MAX-ACCESS  not-accessible
        STATUS      current
        DESCRIPTION
            "This table contains the configuration of the PKM
             attributes that are needed to PKM operation."
        REFERENCE
            "Table 555"
        ::= { wmanIf2BsPkmV2Objects  1 }

wmanIf2BsPkmV2ConfigEntry OBJECT-TYPE
        SYNTAX      WmanIf2BsPkmV2ConfigEntry
        MAX-ACCESS  not-accessible
        STATUS      current
        DESCRIPTION
            "Each entry contains objects that define the PKM attributes
             of each BS."
        INDEX     { ifIndex }
        ::= { wmanIf2BsPkmV2ConfigTable  1 }

WmanIf2BsPkmV2ConfigEntry ::= SEQUENCE {
        wmanIf2BsPkmPmkPrehandshakeLifetime     Integer32,
        wmanIf2BsPkmPmkLifetime                 Integer32,
        wmanIf2BsSaChallengeTimeout             Integer32,
        wmanIf2BsMaxSaTekChallenge              Integer32,
        wmanIf2BsSaTekTimeout                   Integer32,
        wmanIf2BsMaxSaTekRequest                Integer32,
        wmanIf2BsPkmV2AkLifetime                Integer32,
        wmanIf2BsPkmV2TekLifetime               Integer32,
        wmanIf2BsPkmV2AuthWaitTimeout           Integer32,
        wmanIf2BsPkmV2ReauthWaitTimeout         Integer32,
        wmanIf2BsPkmV3AuthGraceTime             Integer32,
        wmanIf2BsPkmV4OpWaitTimeout             Integer32,
        wmanIf2BsPkmV2RekeyWaitTimeout          Integer32,
        wmanIf2BsPkmV2TekGraceTime              Integer32,
        wmanIf2BsPkmV2AuthRejectWaitTimeout     Integer32}

wmanIf2BsPkmPmkPrehandshakeLifetime OBJECT-TYPE
        SYNTAX      Integer32 (5 .. 900)
        UNITS       "seconds"
        MAX-ACCESS  read-write
        STATUS      current
```



```
        DESCRIPTION
            "This object defines the PMK or PAK prehandshake lifetime."
        REFERENCE
             "Table 555"
        DEFVAL         { 10 }
        ::= { wmanIf2BsPkmV2ConfigEntry 1 }

wmanIf2BsPkmPmkLifetime OBJECT-TYPE
        SYNTAX      Integer32 (60 .. 86400)
        UNITS       "seconds"
        MAX-ACCESS  read-write
        STATUS      current
        DESCRIPTION
            "This object defines PMK lifetime, if MSK lifetime is
             unspecified (i.e., by AAA server)."
        REFERENCE
             "Table 555"
        DEFVAL         { 3600 }
        ::= { wmanIf2BsPkmV2ConfigEntry 2 }

wmanIf2BsSaChallengeTimeout OBJECT-TYPE
        SYNTAX      Integer32 (500 .. 2000)
        UNITS       "milliseconds"
        MAX-ACCESS  read-write
        STATUS      current
        DESCRIPTION
            "This object defines the timeout value for SA-TEKChallenge
             retransmission."
        REFERENCE
             "Table 555"
        DEFVAL         { 1000 }
        ::= { wmanIf2BsPkmV2ConfigEntry 3 }

wmanIf2BsMaxSaTekChallenge OBJECT-TYPE
        SYNTAX      Integer32 (1 .. 3)
        MAX-ACCESS  read-write
        STATUS      current
        DESCRIPTION
            "This object defines the maximum number of SA-TEK-Challenge
             transmissions."
        REFERENCE
             "Table 555"
        DEFVAL         { 3 }
        ::= { wmanIf2BsPkmV2ConfigEntry 4 }

wmanIf2BsSaTekTimeout OBJECT-TYPE
        SYNTAX      Integer32 (100 .. 1000)
        UNITS       "milliseconds"
        MAX-ACCESS  read-write
        STATUS      current
        DESCRIPTION
            "This object defines the timeout value for SA-TEKRequest
             retransmission."
        REFERENCE
```

```
             "Table 555"
        DEFVAL         { 300 }
        ::= { wmanIf2BsPkmV2ConfigEntry 5 }

wmanIf2BsMaxSaTekRequest OBJECT-TYPE
        SYNTAX      Integer32 (1 .. 3)
        MAX-ACCESS  read-write
        STATUS      current
        DESCRIPTION
            "This object defines the maximum number of SA-TEK-Request
             retransmission."
        REFERENCE
             "Table 555"
        DEFVAL         { 3 }
        ::= { wmanIf2BsPkmV2ConfigEntry 6 }

wmanIf2BsPkmV2AkLifetime OBJECT-TYPE
        SYNTAX      Integer32 (86400 .. 6048000)
        UNITS       "seconds"
        MAX-ACCESS  read-write
        STATUS      current
        DESCRIPTION
            "This object defines the lifetime of a newly assigned
             authorization key."
        DEFVAL         { 604800 }
        ::= { wmanIf2BsPkmV2ConfigEntry 7 }

wmanIf2BsPkmV2TekLifetime OBJECT-TYPE
        SYNTAX      Integer32 (1800 .. 6048000)
        UNITS       "seconds"
        MAX-ACCESS  read-write
        STATUS      current
        DESCRIPTION
            "This object defines the lifetime of a newly assigned
             Traffic Encryption Key(TEK)."
        DEFVAL         { 43200 }
        ::= { wmanIf2BsPkmV2ConfigEntry 8 }

wmanIf2BsPkmV2AuthWaitTimeout OBJECT-TYPE
        SYNTAX      Integer32 (2 .. 30)
        UNITS       "milliseconds"
        MAX-ACCESS  read-write
        STATUS      current
        DESCRIPTION
            "This object defines the Auth Req retransmission interval
             from Auth Wait state. It is sent to SS via Auth Reply,
             PMKv2-RSA reply, or PKMv2-SA-TEK response messages."
        REFERENCE
            "Subclause 11.9.18.1, Table 555"
        DEFVAL      { 10 }
        ::= { wmanIf2BsPkmV2ConfigEntry 9 }

wmanIf2BsPkmV2ReauthWaitTimeout OBJECT-TYPE
        SYNTAX      Integer32 (2 .. 30)
```



```
        UNITS       "seconds"
        MAX-ACCESS  read-write
        STATUS      current
        DESCRIPTION
            "This object defines the Auth Req retransmission interval
             from Reauth Wait state. It is sent to SS via Auth Reply,
             PMKv2-RSA reply, or PKMv2-SA-TEK response messages."
        REFERENCE
            "Subclause 11.9.18.2, Table 555"
        DEFVAL      { 10 }
        ::= { wmanIf2BsPkmV2ConfigEntry 10 }

wmanIf2BsPkmV3AuthGraceTime OBJECT-TYPE
        SYNTAX      Integer32 (300 .. 3600)
        UNITS       "seconds"
        MAX-ACCESS  read-write
        STATUS      current
        DESCRIPTION
            "The value of this object is the grace time for an
             authorization key. A SS is expected to start trying to get
             a new authorization key beginning AuthGraceTime seconds
            before the authorization key actually expires. It is sent to
             SS via Auth Reply, PMKv2-RSA reply, or PKMv2-SA-TEK
             response messages."
        REFERENCE
            "Subclause 11.9.18.3, Table 555"
        DEFVAL      { 600 }
        ::= { wmanIf2BsPkmV2ConfigEntry 11 }

wmanIf2BsPkmV4OpWaitTimeout OBJECT-TYPE
        SYNTAX      Integer32 (1 .. 10)
        UNITS       "seconds"
        MAX-ACCESS  read-write
        STATUS      current
        DESCRIPTION
            "This object defines the Key Req retransmission interval
             from Op Wait state. It is sent to SS via Auth Reply,
             PMKv2-RSA reply, or PKMv2-SA-TEK response messages."
        REFERENCE
            "Subclause 11.9.18.4, Table 555"
        DEFVAL      { 1 }
        ::= { wmanIf2BsPkmV2ConfigEntry 12 }

wmanIf2BsPkmV2RekeyWaitTimeout OBJECT-TYPE
        SYNTAX      Integer32 (1 .. 10)
        UNITS       "seconds"
        MAX-ACCESS  read-write
        STATUS      current
        DESCRIPTION
            "This object defines the Key Req retransmission interval
             from Rekey Wait state. It is sent to SS via Auth Reply,
             PMKv2-RSA reply, or PKMv2-SA-TEK response messages."
        REFERENCE
            "Subclause 11.9.18.5, Table 555"
```

```
        DEFVAL      { 1 }
        ::= { wmanIf2BsPkmV2ConfigEntry 13 }

wmanIf2BsPkmV2TekGraceTime OBJECT-TYPE
        SYNTAX      Integer32 (60 .. 3600)
        UNITS       "seconds"
        MAX-ACCESS  read-write
        STATUS      current
        DESCRIPTION
            "The value of this object is the grace time for the TEK in
             seconds. The SS is expected to start trying to acquire a
             new TEK beginning TEK GraceTime seconds before the
             expiration of the most recent TEK. It is sent to SS via
             Auth Reply, PMKv2-RSA reply, or PKMv2-SA-TEK response
             messages."
        REFERENCE
            "Subclause 11.9.18.6, Table 555"
        DEFVAL      { 300 }
        ::= { wmanIf2BsPkmV2ConfigEntry 14 }

wmanIf2BsPkmV2AuthRejectWaitTimeout OBJECT-TYPE
        SYNTAX      Integer32 (10 .. 600)
        UNITS       "seconds"
        MAX-ACCESS  read-write
        STATUS      current
        DESCRIPTION
            "This object defines the Delay before resending Auth Request
             after receiving Auth Reject. It is sent to SS via Auth
             Reply,PMKv2-RSA reply, or PKMv2-SA-TEK response messages."
        REFERENCE
            "Subclause 11.9.18.7, Table 555"
        DEFVAL      { 60 }
        ::= { wmanIf2BsPkmV2ConfigEntry 15 }

--
-- Table wmanIf2BsSsPkmV2RsaAuthTable
--
wmanIf2BsSsPkmV2RsaAuthTable OBJECT-TYPE
        SYNTAX      SEQUENCE OF WmanIf2BsSsPkmV2RsaAuthEntry
        MAX-ACCESS  not-accessible
        STATUS      current
        DESCRIPTION
            "This table contains information related to PKMV2
             RSA based authorization process."
        REFERENCE
            "Subclause 6.3.2.3.9.11"
        ::= { wmanIf2BsPkmV2Objects 2 }

wmanIf2BsSsPkmV2RsaAuthEntry OBJECT-TYPE
        SYNTAX      WmanIf2BsSsPkmV2RsaAuthEntry
        MAX-ACCESS  not-accessible
        STATUS      current
        DESCRIPTION
            "Each entry contains objects that define the SS
```



```
             authorization attributes for each SS associated with each
             BS sector."
        INDEX     { ifIndex, wmanIf2BsSsMacAddress }
        ::= { wmanIf2BsSsPkmV2RsaAuthTable  1 }

WmanIf2BsSsPkmV2RsaAuthEntry ::= SEQUENCE {
        wmanIf2BsSsPkmV2BsCertificate           OCTET STRING,
        wmanIf2BsSsPkmV2SsCertificate           OCTET STRING,
        wmanIf2BsSsPkmV2SaId                    Integer32,
        wmanIf2BsSsPkmV2SsRandom                OCTET STRING,
        wmanIf2BsSsPkmV2BsRandom                OCTET STRING,
        wmanIf2BsSsPkmV2AuthKeySequenceNumber   Integer32,
        wmanIf2BsSsPkmV2AuthKeyLifetime         Integer32,
        wmanIf2BsSsPkmV2AuthResult              Integer32,
        wmanIf2BsSsPkmV2AuthFailure             WmanIf2PkmErrorCode,
        wmanIf2BsSsPkmV2AkN-1ExpireTime         DateAndTime,
        wmanIf2BsSsPkmV2AkNExpireTime           DateAndTime,
        wmanIf2BsSsPkmV2CertificateStatus       WmanIf2CertificateStat}

wmanIf2BsSsPkmV2BsCertificate OBJECT-TYPE
        SYNTAX      OCTET STRING (SIZE(0..65535))
        MAX-ACCESS  read-only
        STATUS      current
        DESCRIPTION
            "BS sends the BS-Certificate in the PKMV2 RSA-Reply message
             for BS-SS mutual authentication. It is the DER-encoded
             ASN.1 X.509 BS Certificate."
        REFERENCE
            "Subclause 11.9.24"
        ::= { wmanIf2BsSsPkmV2RsaAuthEntry 1 }

wmanIf2BsSsPkmV2SsCertificate OBJECT-TYPE
        SYNTAX      OCTET STRING (SIZE(0..65535))
        MAX-ACCESS  read-only
        STATUS      current
        DESCRIPTION
            "SS sends the SS-Certificate in the PKMV2 RSA-Request
             message. It contains an X.509 SS certificate issued by the
             SS's manufacturer. The SS's X.509 certificate is a
             public-key certificate which binds the SS's identifying
             information to its RSA public key in a verifiable manner.
             The X.509 certificate is digitally signed by the SS's
             manufacturer, and that signature can be verified by a BS
             that knows the manufacturer's public key.
             The manufacturer's public key is placed in an X.509
             certification authority (CA) certificate, which in turn
             is signed by a higher level CA."
        REFERENCE
            "Subclause 11.9.12"
        ::= { wmanIf2BsSsPkmV2RsaAuthEntry 2 }

wmanIf2BsSsPkmV2SaId OBJECT-TYPE
        SYNTAX      Integer32 (0..65535)
        MAX-ACCESS  read-only
```

```
        STATUS      current
        DESCRIPTION
            "SS's primary SAID equal to the Basic CID. SS sends the SAID
             in the PKMV2 RSA-Request message."
        REFERENCE
             "Subclause 6.3.2.3.9.2"
        ::= { wmanIf2BsSsPkmV2RsaAuthEntry 3 }

wmanIf2BsSsPkmV2SsRandom OBJECT-TYPE
        SYNTAX      OCTET STRING (SIZE(8))
        MAX-ACCESS  read-only
        STATUS      current
        DESCRIPTION
            "This attribute contains a quantity that is pseudo random
             number generated from the MS and used as fresh number for
             mutual authorization message handshake. SS sends the
             SS-Random in the PKMV2 RSA-Request message."
        REFERENCE
            "Subclause 11.9.21"
        ::= { wmanIf2BsSsPkmV2RsaAuthEntry 4 }

wmanIf2BsSsPkmV2BsRandom OBJECT-TYPE
        SYNTAX      OCTET STRING (SIZE(8))
        MAX-ACCESS  read-only
        STATUS      current
        DESCRIPTION
            "This attribute contains a quantity that is pseudo random
             number generated from the BS and used as fresh number for
             mutual authorization message handshake.BS sends the
             BS-Random in the PKMV2 RSA-Reply message."
        REFERENCE
            "Subclause 11.9.22"
        ::= { wmanIf2BsSsPkmV2RsaAuthEntry 5 }

wmanIf2BsSsPkmV2AuthKeySequenceNumber OBJECT-TYPE
        SYNTAX      Integer32 (0 .. 15)
        MAX-ACCESS  read-only
        STATUS      current
        DESCRIPTION
            "This object provides the most recent authorization key
             sequence number in the PKMV2 RSA-Reply message for an SS."
        REFERENCE
             "Subclause 11.9.5"
        ::= { wmanIf2BsSsPkmV2RsaAuthEntry 6 }

wmanIf2BsSsPkmV2AuthKeyLifetime OBJECT-TYPE
        SYNTAX      Integer32 (86400..6048000)
        UNITS       "seconds"
        MAX-ACCESS  read-only
        STATUS      current
        DESCRIPTION
            "This object defines the lifetime of an authorization
             key (AK) the BS assigns to a SS. BS sends the key lifetime
             in the PKMV2 RSA-Reply message."
```



```
        REFERENCE
             "Subclause 11.9.4"
        ::= { wmanIf2BsSsPkmV2RsaAuthEntry 7 }

wmanIf2BsSsPkmV2AuthResult OBJECT-TYPE
        SYNTAX      INTEGER {success(0),
                             reject(1)}
        MAX-ACCESS  read-only
        STATUS      current
        DESCRIPTION
            "This attribute contains the result code of the RSA-based
             authorization. SS sends the result code in PKMV2
             RSA-Acknowledgement message."
        REFERENCE
             "Subclause 11.9.34"
        ::= { wmanIf2BsSsPkmV2RsaAuthEntry 8 }

wmanIf2BsSsPkmV2AuthFailure OBJECT-TYPE
        SYNTAX      WmanIf2PkmErrorCode
        MAX-ACCESS  read-only
        STATUS      current
        DESCRIPTION
            "BS returs PKMV2 RSA-Rejects message if an authorization
             failure is detected.

             Failure type umknownManufactur(4)- ssBsIncompatibleSc(9)are
             considered permanent authorization failure, since any
             attempts of reauthorization would continue to result in
             Authorization Rejects. Details about the cause of a
             Permanent Authorization Failure may be reported to the SS
             in an optional Display-String attribute that may accompany
             the Error-Code attribute in Authorization Reject messages.

             Note that the BS may log the Display-String attribute and
             Authorization failures in wmanIfDevMib, and generate a trap
             to an SNMP manager."
        REFERENCE
             "Subclause 11.9.10"
        ::= { wmanIf2BsSsPkmV2RsaAuthEntry 9 }

wmanIf2BsSsPkmV2AkN-1ExpireTime OBJECT-TYPE
        SYNTAX      DateAndTime
        MAX-ACCESS  read-only
        STATUS      current
        DESCRIPTION
            "This object is the time when AK(N-1) expires.
             wmanIf2BsSsPkmV2AkN-1ExpireTime =
                 RSA-Reply[AK(N-1)] arrival time +  AK(N-1) lifetime

             If this FSM has only one authorization key, then
             wmanIf2BsSsPkmV2AkN-1ExpireTime = the activation of FSM."
        ::= { wmanIf2BsSsPkmV2RsaAuthEntry 10 }

wmanIf2BsSsPkmV2AkNExpireTime OBJECT-TYPE
```

```
        SYNTAX      DateAndTime
        MAX-ACCESS  read-only
        STATUS      current
        DESCRIPTION
            "This object is the time when AK(N) expires.
             wmanIf2BsSsPkmV2AkNExpireTime =
                 RSA-Reply[AK(N)] arrival time +  AK(N) lifetime

             If this FSM has only one authorization key, then
             wmanIf2BsSsPkmV2AkNExpireTime = the activation of FSM."
        ::= { wmanIf2BsSsPkmV2RsaAuthEntry 11 }

wmanIf2BsSsPkmV2CertificateStatus OBJECT-TYPE
        SYNTAX      WmanIf2CertificateStat
        MAX-ACCESS  read-only
        STATUS      current
        DESCRIPTION
            "Indicate the reason why a SS's certificate is deemed valid
             or invalid."
        ::= { wmanIf2BsSsPkmV2RsaAuthEntry 12 }

--
-- Table wmanIf2BsSsPkmV2TekTable
--
wmanIf2BsSsPkmV2TekTable OBJECT-TYPE
        SYNTAX      SEQUENCE OF WmanIf2BsSsPkmV2TekEntry
        MAX-ACCESS  not-accessible
        STATUS      current
        DESCRIPTION
            "This table contains the TEK attributes that are associated
             with each SAID."
        ::= { wmanIf2BsPkmV2Objects 3 }

wmanIf2BsSsPkmV2TekEntry OBJECT-TYPE
        SYNTAX      WmanIf2BsSsPkmV2TekEntry
        MAX-ACCESS  not-accessible
        STATUS      current
        DESCRIPTION
            ""
        INDEX     { ifIndex,
                    wmanIf2BsSsMacAddress,
                    wmanIf2BsSsPkmV2SaidIndex }
        ::= { wmanIf2BsSsPkmV2TekTable  1 }

WmanIf2BsSsPkmV2TekEntry ::= SEQUENCE {
        wmanIf2BsSsPkmV2SaidIndex               Integer32,
        wmanIf2BsSsPkmV2SaType                  WmanIf2SaType,
        wmanIf2BsSsPkmV2SaServiceType           WmanIf2SaServiceType,
        wmanIf2BsSsPkmV2TekDataEncryptAlgorithm WmanIf2DataEncryptAlgId,
        wmanIf2BsSsPkmV2TekDataAuthentAlgorithm WmanIf2DataAuthAlgId,
        wmanIf2BsSsPkmV2TekEncryptAlgorithm     WmanIf2TekEncryptAlgId,
        wmanIf2BsSsPkmV2TekN-1SequenceNumber    Integer32,
        wmanIf2BsSsPkmV2TekN-1Lifetime          Integer32,
        wmanIf2BsSsPkmV2TekNSequenceNumber      Integer32,
```



```
        wmanIf2BsSsPkmV2TekNLifetime           Integer32,
        wmanIf2BsSsPkmV2TekInvalidError         WmanIf2PkmErrorCode,
        wmanIf2BsSsPkmV2TekN-1ExpireTime        DateAndTime,
        wmanIf2BsSsPkmV2TekNExpireTime          DateAndTime}

wmanIf2BsSsPkmV2SaidIndex OBJECT-TYPE
        SYNTAX      Integer32 (0 .. 65535)
        MAX-ACCESS  not-accessible
        STATUS      current
        DESCRIPTION
            "SAID index to the wmanIf2BsSsPkmV2TekTable."
        ::= { wmanIf2BsSsPkmV2TekEntry 1 }

wmanIf2BsSsPkmV2SaType OBJECT-TYPE
        SYNTAX      WmanIf2SaType
        MAX-ACCESS  read-only
        STATUS      current
        DESCRIPTION
            "SA Type attribute that is included in the PKMv2
             SA-TEK-response message."
        REFERENCE
            "Table 602 in subclause 11.9.17"
        ::= { wmanIf2BsSsPkmV2TekEntry 2 }

wmanIf2BsSsPkmV2SaServiceType OBJECT-TYPE
        SYNTAX      WmanIf2SaServiceType
        MAX-ACCESS  read-only
        STATUS      current
        DESCRIPTION
            "SA Type attribute that is included in the PKMv2
             SA-TEK-response message."
        REFERENCE
             "Table 601, subclause 11.9.16"
        ::= { wmanIf2BsSsPkmV2TekEntry 3 }

wmanIf2BsSsPkmV2TekDataEncryptAlgorithm OBJECT-TYPE
        SYNTAX      WmanIf2DataEncryptAlgId
        MAX-ACCESS  read-only
        STATUS      current
        DESCRIPTION
            "The data encryption algorithm attribute that is included
             in the PKMv2 SA-TEK-response message."
        REFERENCE
             "Table 597"
        ::= { wmanIf2BsSsPkmV2TekEntry 4 }

wmanIf2BsSsPkmV2TekDataAuthentAlgorithm OBJECT-TYPE
        SYNTAX      WmanIf2DataAuthAlgId
        MAX-ACCESS  read-only
        STATUS      current
        DESCRIPTION
            "The data authentication algorithm attribute that is
             included in the PKMv2 SA-TEK-response message."
        REFERENCE
```

```
             "Table 598"
        ::= { wmanIf2BsSsPkmV2TekEntry 5 }

wmanIf2BsSsPkmV2TekEncryptAlgorithm OBJECT-TYPE
        SYNTAX      WmanIf2TekEncryptAlgId
        MAX-ACCESS  read-only
        STATUS      current
        DESCRIPTION
            "The TEK key encryption algorithm attribute that is
             included in the PKMv2 SA-TEK-response message."
        REFERENCE
             "Table 599"
        ::= { wmanIf2BsSsPkmV2TekEntry 6 }

wmanIf2BsSsPkmV2TekN-1SequenceNumber OBJECT-TYPE
        SYNTAX      Integer32 (0 .. 3)
        MAX-ACCESS  read-only
        STATUS      current
        DESCRIPTION
            "At all times the BS maintains two sets of active
             generations of keying material per SAID. One set
             corresponds to the 'N-1' generation of keying material,
             the second set corresponds to the 'N' generation of
             keying material. The N generation has a key sequence
             number one greater than (modulo 4) that of the N-1
             generation. This object provides the older TEK sequence
             number in the Key Reply message for an SS."
        REFERENCE
            "Subclause 11.9.5"
        ::= { wmanIf2BsSsPkmV2TekEntry 7 }

wmanIf2BsSsPkmV2TekN-1Lifetime OBJECT-TYPE
        SYNTAX      Integer32 (1800 .. 604800)
        UNITS       "seconds"
        MAX-ACCESS  read-only
        STATUS      current
        DESCRIPTION
            "This object provides the N-1 TEK Remaining Lifetime."
        REFERENCE
            "Table 594, Subclause 11.9.8"
        ::= { wmanIf2BsSsPkmV2TekEntry 8 }

wmanIf2BsSsPkmV2TekNSequenceNumber OBJECT-TYPE
        SYNTAX      Integer32 (0 .. 3)
        MAX-ACCESS  read-only
        STATUS      current
        DESCRIPTION
            "This object provides the N TEK sequence number in the
             Key Reply message for an SS."
        REFERENCE
            "Table 594, Subclause 11.9.8"
        ::= { wmanIf2BsSsPkmV2TekEntry 9 }

wmanIf2BsSsPkmV2TekNLifetime OBJECT-TYPE
```



```
        SYNTAX      Integer32 (1800 .. 604800)
        UNITS       "seconds"
        MAX-ACCESS  read-only
        STATUS      current
        DESCRIPTION
            "This object provides the N TEK Remaining Lifetime."
        REFERENCE
            "Table 594, Subclause 11.9.8"
        ::= { wmanIf2BsSsPkmV2TekEntry 10 }

wmanIf2BsSsPkmV2TekInvalidError OBJECT-TYPE
        SYNTAX      WmanIf2PkmErrorCode
        MAX-ACCESS  read-only
        STATUS      current
        DESCRIPTION
            "BS returns the PKMv2 TEK-Invalid message if the BS
             determines that the MS encrypted an UL PDU with an invalid
             TEK.

             Note that the BS may log the Display-String attribute and
             PKMv2 TEK-Invalid error in wmanIfDevMib."
        REFERENCE
            "Subclause 11.9.10 and Subclause 6.3.2.3.9.25"
        ::= { wmanIf2BsSsPkmV2TekEntry 11 }

wmanIf2BsSsPkmV2TekN-1ExpireTime OBJECT-TYPE
        SYNTAX DateAndTime
        MAX-ACCESS read-only
        STATUS current
        DESCRIPTION
            "This object is the time when TEK(N-1) expires.
             wmanIf2BsSsPkmV2TekN-1ExpireTime =
                 Key Reply[TEK(N-1)] arrival time +  TEK(N-1) lifetime

             If this FSM has only one authorization key, then
             wmanIf2BsSsPkmV2TekN-1ExpireTime = the activation of FSM."
        ::= { wmanIf2BsSsPkmV2TekEntry 12 }

wmanIf2BsSsPkmV2TekNExpireTime OBJECT-TYPE
        SYNTAX DateAndTime
        MAX-ACCESS read-only
        STATUS current
        DESCRIPTION
            "This object is the time when TEK(N) expires.
             wmanIf2BsSsPkmV2TekNExpireTime =
                 Key Reply[TEK(N)] arrival time +  TEK(N) lifetime

             If this FSM has only one authorization key, then
             wmanIf2BsSsPkmV2TekNExpireTime = the activation of FSM."
        ::= { wmanIf2BsSsPkmV2TekEntry 13 }

--
-- Table wmanIf2BsSsPkmV23wayHandshakeTable
--
```

```
wmanIf2BsSsPkmV23wayHandshakeTable OBJECT-TYPE
        SYNTAX      SEQUENCE OF WmanIf2BsSsPkmV23wayHandshakeEntry
        MAX-ACCESS  not-accessible
        STATUS      current
        DESCRIPTION
            "This table contains information related to PKMV2 3-way
             handshake process."
        REFERENCE
            "Subclause 7.8.1"
        ::= { wmanIf2BsPkmV2Objects 4 }

wmanIf2BsSsPkmV23wayHandshakeEntry OBJECT-TYPE
        SYNTAX      WmanIf2BsSsPkmV23wayHandshakeEntry
        MAX-ACCESS  not-accessible
        STATUS      current
        DESCRIPTION
            "Each entry contains objects that define the SS 3-way
             handshake attributes for each SS associated with each
             BS sector."
        INDEX     { ifIndex, wmanIf2BsSsMacAddress }
        ::= { wmanIf2BsSsPkmV23wayHandshakeTable  1 }

WmanIf2BsSsPkmV23wayHandshakeEntry ::= SEQUENCE {
        wmanIf2BsSsPkmV2SaTekBsRandom           OCTET STRING,
        wmanIf2BsSsPkmV2SaTekAkSequenceNumber   Integer32,
        wmanIf2BsSsPkmV2SaTekAkId               OCTET STRING,
        wmanIf2BsSsPkmV2KeyLifetime             Integer32,
        wmanIf2BsSsPkmV2SaTekMsRandom           OCTET STRING}

wmanIf2BsSsPkmV2SaTekBsRandom OBJECT-TYPE
        SYNTAX      OCTET STRING (SIZE(8))
        MAX-ACCESS  read-only
        STATUS      current
        DESCRIPTION
            "This attribute contains a quantity that is a random number
             generated from the BS and used as fresh number for 3-way
             handshake process. BS sends the BS-Random in the PKMV2
             SA-TEK-Challenge message."
        REFERENCE
            "Table 67"
        ::= { wmanIf2BsSsPkmV23wayHandshakeEntry 1 }

wmanIf2BsSsPkmV2SaTekAkSequenceNumber OBJECT-TYPE
        SYNTAX      Integer32 (0 .. 15)
        MAX-ACCESS  read-only
        STATUS      current
        DESCRIPTION
            "This object indicates the sequence number of root keys
             (PAK and PMK) for the AK. This value is the most
             significant 2-bit of PAK sequence number concatenated
             with the least significant 2-bit of PMK sequence number.
             BS sends the sequence number in the PKMV2 SA-TEK-Challenge
             message."
        REFERENCE
```



```
             "Table 67"
        ::= { wmanIf2BsSsPkmV23wayHandshakeEntry 2 }

wmanIf2BsSsPkmV2SaTekAkId OBJECT-TYPE
        SYNTAX      OCTET STRING (SIZE(8))
        MAX-ACCESS  read-only
        STATUS      current
        DESCRIPTION
            "This objects is used to identify the AK. BS sends the AKID
             attribute in the PKMV2 SA-TEK-Challenge message."
        REFERENCE
             "Table 67"
        ::= { wmanIf2BsSsPkmV23wayHandshakeEntry 3 }

wmanIf2BsSsPkmV2KeyLifetime OBJECT-TYPE
        SYNTAX      Integer32 (60 .. 86400)
        UNITS       "seconds"
        MAX-ACCESS  read-only
        STATUS      current
        DESCRIPTION
            "This object indicates the PMK lifetime. BS sends the key
             lifetime attribute in the PKMV2 SA-TEK-Challenge message."
        REFERENCE
             "Table 67"
        ::= { wmanIf2BsSsPkmV23wayHandshakeEntry 4 }

wmanIf2BsSsPkmV2SaTekMsRandom OBJECT-TYPE
        SYNTAX      OCTET STRING (SIZE(8))
        MAX-ACCESS  read-only
        STATUS      current
        DESCRIPTION
            "This attribute contains a quantity that is a random number
             generated from the MS and used as fresh number for 3-way
             handshake process. MS sends the MS-Random in the PKMV2
             SA-TEK-Request message."
        REFERENCE
            "Table 68"
        ::= { wmanIf2BsSsPkmV23wayHandshakeEntry 5 }

--
-- Conformance Information
--
wmanIf2BsConformance    OBJECT IDENTIFIER ::= {wmanIf2BsMib 2}
wmanIf2BsMibGroups      OBJECT IDENTIFIER ::= {wmanIf2BsConformance 1}
wmanIf2BsMibCompliances OBJECT IDENTIFIER ::= {wmanIf2BsConformance 2}

-- compliance statements
wmanIf2BsMibCompliance MODULE-COMPLIANCE
        STATUS      current
        DESCRIPTION
            "The compliance statement for devices that implement
             Wireless MAN interfaces as defined in IEEE Std 802.16."

        MODULE          -- wmanIf2BsMib
```

```
-- conditionally mandatory group
GROUP       wmanIf2BsMibFmGroup
DESCRIPTION
    "This group is mandatory for Base Station."

-- conditionally mandatory group
GROUP       wmanIf2BsMibNotificationGroup
DESCRIPTION
    "This group is mandatory for Base Station."

-- conditionally mandatory group
GROUP       wmanIf2BsMibCmGroup
DESCRIPTION
    "This group is mandatory for Base Station."

-- mandatory group
GROUP       wmanIf2BsMibCommonPhyGroup
DESCRIPTION
    "This group is mandatory for Base Station."

-- conditionally mandatory group
GROUP       wmanIf2BsMibOfdmGroup
DESCRIPTION
    "This group is mandatory for Base Station implementaing the
     OFDM PHY."

-- conditionally mandatory group
GROUP       wmanIf2BsMibOfdmaGroup
DESCRIPTION
    "This group is mandatory for Base Station implementaing the
     OFDMA PHY."

-- conditionally mandatory group
GROUP       wmanIf2BsMibAmGroup
DESCRIPTION
    "This group is mandatory for Base Station."

-- conditionally mandatory group
GROUP       wmanIf2BsMibPkmGroup
DESCRIPTION
    "This group is mandatory for Base Station."

-- conditionally mandatory group
GROUP       wmanIf2BsMibPkmV1Group
DESCRIPTION
    "This group is mandatory for Base Station."

-- conditionally mandatory group
GROUP       wmanIf2BsMibPkmV2Group
DESCRIPTION
    "This group is mandatory for Base Station."

-- conditionally mandatory group
```



```
        GROUP       wmanIf2BsMibPmGroup
        DESCRIPTION
            "This group is mandatory for Base Station."

        ::= { wmanIf2BsMibCompliances 1 }

wmanIf2BsMibFmGroup     OBJECT-GROUP
        OBJECTS {wmanIf2BsTrapControlRegister,
                 wmanIf2BsStatusTrapControlRegister,
                 wmanIf2BsRssiLowThreshold,
                 wmanIf2BsRssiHighThreshold,
                 wmanIf2BsSsNotificationMacAddr,
                 wmanIf2BsSsStatusValue,
                 wmanIf2BsSsStatusInfo,
                 wmanIf2BsDynamicServiceType,
                 wmanIf2BsDynamicServiceFailReason,
                 wmanIf2BsSsRssiStatus,
                 wmanIf2BsSsRssiStatusInfo,
                 wmanIf2BsSsRegisterStatus,
                 wmanIf2BsDynamicServiceFailSfid,
                 wmanIf2BsEventNotificationTime}
        STATUS       current
        DESCRIPTION
            "This group contains objects for Fault Management."
        ::= { wmanIf2BsMibGroups 1 }

wmanIf2BsMibNotificationGroup     NOTIFICATION-GROUP
        NOTIFICATIONS {wmanIf2BsSsStatusNotificationTrap,
                       wmanIf2BsSsRssiStatusChangeTrap,
                       wmanIf2BsSsPkmFailTrap,
                       wmanIf2BsSsDynamicServiceFailTrap,
                       wmanIf2BsSsRegisterTrap,
                       wmanIf2BsStartupMetricsTrap,
                       wmanIf2BsThroughputMetricsTrap,
                       wmanIf2BsNetworkEntryMetricsTrap,
                       wmanIf2BsPacketErrorRateTrap,
                       wmanIf2BsHandoverMetricsTrap,
                       wmanIf2BsUserMetricsTrap,
                       wmanIf2BsCidMetricsTrap,
                       wmanIf2BsServiceFlowMetricsTrap,
                       wmanIf2BsArqHarqMetricsTrap,
                       wmanIf2BsMacMetricsTrap}
        STATUS       current
        DESCRIPTION
            "This group contains event notifications."
        ::= { wmanIf2BsMibGroups 2 }

wmanIf2BsMibCmGroup     OBJECT-GROUP
        OBJECTS {-- Registered
                 wmanIf2BsSsBasicCid,
                 wmanIf2BsSsPrimaryCid,
                 wmanIf2BsSsSecondaryCid,
                 wmanIf2BsSsManagementSupport,
                 wmanIf2BsSsIpManagementMode,
```

```
wmanIf2BsSs2ndMgmtArqEnable,
wmanIf2BsSs2ndMgmtArqWindowSize,
wmanIf2BsSs2ndMgmtArqDnLinkTxDelay,
wmanIf2BsSs2ndMgmtArqUpLinkTxDelay,
wmanIf2BsSs2ndMgmtArqDnLinkRxDelay,
wmanIf2BsSs2ndMgmtArqUpLinkRxDelay,
wmanIf2BsSs2ndMgmtArqBlockLifetime,
wmanIf2BsSs2ndMgmtArqSyncLossTimeout,
wmanIf2BsSs2ndMgmtArqDeliverInOrder,
wmanIf2BsSs2ndMgmtArqRxPurgeTimeout,
wmanIf2BsSs2ndMgmtArqBlockSize,
wmanIf2BsSsVendorIdEncoding,
wmanIf2BsSsAasBroadcastPermission,
wmanIf2BsSsMacVersion,

-- Configuration parameters
wmanIf2BsDcdInterval,
wmanIf2BsUcdInterval,
wmanIf2BsUcdTransition,
wmanIf2BsDcdTransition,
wmanIf2BsInitialRangingInterval,
wmanIf2BsInvitedRangingRetries,
wmanIf2BsSsULMapProcTime,
wmanIf2BsSsRangRespProcTime,
wmanIf2BsDsxRequestRetries,
wmanIf2BsDsxResponseRetries,
wmanIf2BsT7Timeout,
wmanIf2BsT8Timeout,
wmanIf2BsT9Timeout,
wmanIf2BsT10Timeout,
wmanIf2BsT13Timeout,
wmanIf2BsT15Timeout,
wmanIf2BsT17Timeout,
wmanIf2BsT22Timeout,
wmanIf2BsT27IdleTimer,
wmanIf2BsT27ActiveTimer,
wmanIf2BsRangingCorrectionRetries,
wmanIf2Bs2ndMgmtDlQoSProfileIndex,
wmanIf2Bs2ndMgmtUlQoSProfileIndex,
wmanIf2BsAutoSfidEnabled,
wmanIf2BsAutoSfidRangeMin,
wmanIf2BsAutoSfidRangeMax,
wmanIf2BsAasChanFbckReqFreq,
wmanIf2BsAasBeamSelectFreq,
wmanIf2BsAasChanFbckReqResolution,
wmanIf2BsAasBeamReqResolution,
wmanIf2BsAasNumOptDiversityZones,
wmanIf2BsResetSector,
wmanIf2BsSaChallengeTimer,
wmanIf2BsSaChallengeMaxResends,
wmanIf2BsSaTekTimer,
wmanIf2BsSaTekReqMaxResends,
wmanIf2BsLbsAdvInterval,
wmanIf2BsSiiAdvInterval,
```



```
wmanIf2BsT49Timeout,
wmanIf2BsT56Timeout,
wmanIf2BsT57Timeout,
wmanIf2BsDlRadioRsrcWindowSize,
wmanIf2BsUlRadioRsrcWindowSize,

-- Capability negotiation
wmanIf2BsSsReqCapUplinkCidSupport,
wmanIf2BsSsReqCapDsxFlowControl,
wmanIf2BsSsReqCapMcaFlowControl,
wmanIf2BsSsReqCapMcpGroupCidSupport,
wmanIf2BsSsReqCapPkmFlowControl,
wmanIf2BsSsReqCapMaxNumOfSupportedSA,
wmanIf2BsSsReqCapMaxNumOfClassifier,
wmanIf2BsSsReqCapTtgTransitionGap,
wmanIf2BsSsReqCapRtgTransitionGap,
wmanIf2BsSsReqCapDownlinkCidSupport,
wmanIf2BsSsReqCapMaxNumBurstToMs,
wmanIf2BsSsReqCapMaxMacLevelDlFrame,
wmanIf2BsSsReqCapMaxMacLevelUlFrame,
wmanIf2BsSsReqCapPnWindowSize,
wmanIf2BsSsReqCapOfdmLoopPwrControlSw,
wmanIf2BsSsReqCapOfdmaSdmaPilot,
wmanIf2BsSsReqCapOfdmaNoUlHarqChannel,
wmanIf2BsSsReqCapOfdmaNoDlHarqChannel,
wmanIf2BsSsReqCapOptionsBasic,
wmanIf2BsSsReqCapOptionsBasic2,
wmanIf2BsSsReqCapOptionsOfdm,
wmanIf2BsSsReqCapOptionsOfdma,
wmanIf2BsSsReqCapOptionsOfdma2,
wmanIf2BsSsReqCapCurrentTxPower,
wmanIf2BsSsReqMaxTxPowerBpsk,
wmanIf2BsSsReqMaxTxPowerQpsk,
wmanIf2BsSsReqMaxTxPower16Qam,
wmanIf2BsSsReqMaxTxPower64Qam,

-- Capability negotiation
wmanIf2BsSsRspCapUplinkCidSupport,
wmanIf2BsSsRspCapDsxFlowControl,
wmanIf2BsSsRspCapMcaFlowControl,
wmanIf2BsSsRspCapMcpGroupCidSupport,
wmanIf2BsSsRspCapPkmFlowControl,
wmanIf2BsSsRspCapMaxNumOfSupportedSA,
wmanIf2BsSsRspCapMaxNumOfClassifier,
wmanIf2BsSsRspCapTtgTransitionGap,
wmanIf2BsSsRspCapRtgTransitionGap,
wmanIf2BsSsRspCapDownlinkCidSupport,
wmanIf2BsSsRspCapMaxNumBurstToMs,
wmanIf2BsSsRspCapMaxMacLevelDlFrame,
wmanIf2BsSsRspCapMaxMacLevelUlFrame,
wmanIf2BsSsRspCapNumOfProvisionedSf,
wmanIf2BsSsRspCapPnWindowSize,
wmanIf2BsSsRspCapOfdmLoopPwrControlSw,
wmanIf2BsSsRspCapOfdmaSdmaPilot,
```

```
wmanIf2BsSsRspCapOfdmaNoUlHarqChannel,
wmanIf2BsSsRspCapOfdmaNoDlHarqChannel,
wmanIf2BsSsRspCapOptionsBasic,
wmanIf2BsSsRspCapOptionsBasic2,
wmanIf2BsSsRspCapOptionsOfdm,
wmanIf2BsSsRspCapOptionsOfdma,
wmanIf2BsSsRspCapOptionsOfdma2,
wmanIf2BsSsRspCapCurrentTxPower,
wmanIf2BsSsRspMaxTxPowerBpsk,
wmanIf2BsSsRspMaxTxPowerQpsk,
wmanIf2BsSsRspMaxTxPower16Qam,
wmanIf2BsSsRspMaxTxPower64Qam,

-- Capability negotiation
wmanIf2BsCapUplinkCidSupport,
wmanIf2BsCapDsxFlowControl,
wmanIf2BsCapMcaFlowControl,
wmanIf2BsCapMcpGroupCidSupport,
wmanIf2BsCapPkmFlowControl,
wmanIf2BsCapMaxNumOfSupportedSA,
wmanIf2BsCapMaxNumOfClassifier,
wmanIf2BsCapTtgTransitionGap,
wmanIf2BsCapRtgTransitionGap,
wmanIf2BsCapDownlinkCidSupport,
wmanIf2BsCapMaxNumBurstToMs,
wmanIf2BsCapMaxMacLevelDlFrame,
wmanIf2BsCapMaxMacLevelUlFrame,
wmanIf2BsCapNumOfProvisionedSf,
wmanIf2BsCapPnWindowSize,
wmanIf2BsCapOfdmLoopPwrControlSw,
wmanIf2BsCapOfdmaSdmaPilot,
wmanIf2BsCapOfdmaNoUlHarqChannel,
wmanIf2BsCapOfdmaNoDlHarqChannel,
wmanIf2BsCapOptionsBasic,
wmanIf2BsCapOptionsBasic2,
wmanIf2BsCapOptionsOfdm,
wmanIf2BsCapOptionsOfdma,
wmanIf2BsCapOptionsOfdma2,

-- Capability negotiation
wmanIf2BsCapCfgUplinkCidSupport,
wmanIf2BsCapCfgDsxFlowControl,
wmanIf2BsCapCfgMcaFlowControl,
wmanIf2BsCapCfgMcpGroupCidSupport,
wmanIf2BsCapCfgPkmFlowControl,
wmanIf2BsCapCfgMaxNumOfSupportedSA,
wmanIf2BsCapCfgMaxNumOfClassifier,
wmanIf2BsCapCfgTtgTransitionGap,
wmanIf2BsCapCfgRtgTransitionGap,
wmanIf2BsCapCfgDownlinkCidSupport,
wmanIf2BsCapCfgMaxNumBurstToMs,
wmanIf2BsCapCfgMaxMacLevelDlFrame,
wmanIf2BsCapCfgMaxMacLevelUlFrame,
wmanIf2BsCapCfgNumOfProvisionedSf,
```



```
                wmanIf2BsCapCfgPnWindowSize,
                wmanIf2BsCapCfgOfdmLoopPwrControlSw,
                wmanIf2BsCapCfgOfdmaSdmaPilot,
                wmanIf2BsCapCfgOfdmaNoUlHarqChannel,
                wmanIf2BsCapCfgOfdmaNoDlHarqChannel,
                wmanIf2BsCapCfgOptionsBasic,
                wmanIf2BsCapCfgOptionsBasic2,
                wmanIf2BsCapCfgOptionsOfdm,
                wmanIf2BsCapCfgOptionsOfdma,
                wmanIf2BsCapCfgOptionsOfdma2,

                -- Actions
                wmanIf2BsSsActionsResetSs,
                wmanIf2BsSsActionsAbortSs,
                wmanIf2BsSsActionsOverrideDnFreq,
                wmanIf2BsSsActionsOverrideChannelId,
                wmanIf2BsSsActionsDeReRegSs,
                wmanIf2BsSsActionsDeReRegSsCode,
                wmanIf2BsSsActionsMimoPrecoding,
                wmanIf2BsSsActionsMimoPrecodingDelay,
                wmanIf2BsSsActionsRowStatus,

                -- Multicast polling
                wmanIf2BsMulticastGroupType,
                wmanIf2BsPeriodAllocationParameterM,
                wmanIf2BsPeriodAllocationParameterK,
                wmanIf2BsPeriodAllocationParameterN,
                wmanIf2BsPeriodicAllocationType}
        STATUS       current
        DESCRIPTION
            "This group contains objects for Configuration Manageemnt."
        ::= { wmanIf2BsMibGroups 3 }

wmanIf2BsMibCommonPhyGroup     OBJECT-GROUP
        OBJECTS {-- Uplink Channel
                wmanIf2BsCmnPhyCtBasedResvTimeout,
                wmanIf2BsCmnPhyUplinkCenterFreq,
                wmanIf2BsCmnPhyHoRangingStart,
                wmanIf2BsCmnPhyHoRangingEnd,
                wmanIf2BsCmnPhyUlRadioResource,
                wmanIf2BsCmnPhyUlConfigChangeCount,

                -- Downlink Channel
                wmanIf2BsCmnPhyBsEIRP,
                wmanIf2BsCmnPhyChannelNumber,
                wmanIf2BsCmnPhyMaxEirp,
                wmanIf2BsCmnPhyDownlinkCenterFreq,
                wmanIf2BsCmnPhyBsId,
                wmanIf2BsCmnPhyMacVersion,
                wmanIf2BsCmnPhyCyclicPrefix,
                wmanIf2BsCmnPhyCyclicPrefix,
                wmanIf2BsCmnPhyDlRadioResource,
                wmanIf2BsCmnPhyHysteresisMargin,
                wmanIf2BsCmnPhyTimeToTriggerDuration,
```

```
                 wmanIf2BsCmnPhyMihCapability,
                 wmanIf2BsCmnPhyNspChangeCount,
                 wmanIf2BsCmnPhyCellType,
                 wmanIf2BsCmnPhyBsRestartCount,
                 wmanIf2BsCmnPhyDlConfigChangeCount,
                 wmanIf2BsCmnPhyDlPowerControlMode,

                 -- MBS zone
                 wmanIf2BsCmnPhyMbsZoneIdentifier}
        STATUS       current
        DESCRIPTION
            "This group contains objects for common PHY."
        ::= { wmanIf2BsMibGroups 4 }

wmanIf2BsMibOfdmGroup     OBJECT-GROUP
        OBJECTS {wmanIf2BsOfdmNumSubChReqRegionFull,
                 wmanIf2BsOfdmNumSymbolsReqRegionFull,
                 wmanIf2BsOfdmSubChFocusCtCode,
                 wmanIf2BsOfdmSubChInitRngCapableBs,
                 wmanIf2BsOfdmContentionRngReqOppSize,
                 wmanIf2BsOfdmContentionRngReqBurstSize,
                 wmanIf2BsOfdmFrameDurationCode,
                 wmanIf2BsOfdmNoiseInterference,
                 wmanIf2BsOfdmUcdFecCodeType,
                 wmanIf2BsOfdmFocusCtPowerBoost,
                 wmanIf2BsOfdmUcdTcsEnable,
                 wmanIf2BsOfdmUcdBurstProfileRowStatus,
                 wmanIf2BsOfdmDcdFecCodeType,
                 wmanIf2BsOfdmTcsEnable,
                 wmanIf2BsOfdmDcdBurstProfileRowStatus}
        STATUS       current
        DESCRIPTION
            "This group contains objects for BS and OFDM PHY."
        ::= { wmanIf2BsMibGroups 5 }

wmanIf2BsMibOfdmaGroup     OBJECT-GROUP
        OBJECTS {-- Uplink Channel
                 wmanIf2BsOfdmaUlAmcAlloPhyBandsBitmap,
                 wmanIf2BsOfdmaInitRngCodes,
                 wmanIf2BsOfdmaPeriodicRngCodes,
                 wmanIf2BsOfdmaBWReqCodes,
                 wmanIf2BsOfdmaPeriodRngBackoffStart,
                 wmanIf2BsOfdmaPeriodRngBackoffEnd,
                 wmanIf2BsOfdmaStartOfRngCodes,
                 wmanIf2BsOfdmaPermutationBase,
                 wmanIf2BsOfdmaULAllocSubchBitmap,
                 wmanIf2BsOfdmaOptPermULAllocSubchBitmap,
                 wmanIf2BsOfdmaBandAMCAllocThreshold,
                 wmanIf2BsOfdmaBandAMCReleaseThreshold,
                 wmanIf2BsOfdmaBandAMCAllocTimer,
                 wmanIf2BsOfdmaBandAMCReleaseTimer,
                 wmanIf2BsOfdmaBandStatRepMAXPeriod,
                 wmanIf2BsOfdmaBandAMCRetryTimer,
                 wmanIf2BsOfdmaSafetyChAllocThreshold,
```



```
wmanIf2BsOfdmaSafetyChReleaseThreshold,
wmanIf2BsOfdmaSafetyChAllocTimer,
wmanIf2BsOfdmaSafetyChReleaseTimer,
wmanIf2BsOfdmaBinStatusReportMaxPeriod,
wmanIf2BsOfdmaSafetyChRetryTimer,
wmanIf2BsOfdmaHARQAckDelayDLBurst,
wmanIf2BsOfdmaCqichBandAmcTransDelay,
wmanIf2BsOfdmaMaxRetransmission,
wmanIf2BsOfdmaNormalizedCnOverride,
wmanIf2BsOfdmaSizeOfCqichId,
wmanIf2BsOfdmaNormalizedCnValue,
wmanIf2BsOfdmaNormalizedCnOverride2,
wmanIf2BsOfdmaBandAmcEntryAvgCinr,
wmanIf2BsOfdmaAasPreambleUpperBond,
wmanIf2BsOfdmaAasPreambleLowerBond,
wmanIf2BsOfdmaAasBeamSelectAllowed,
wmanIf2BsOfdmaCqichIndicationFlag,
wmanIf2BsOfdmaMsUpPowerAdjStep,
wmanIf2BsOfdmaMsDownPowerAdjStep,
wmanIf2BsOfdmaMinPowerOffsetAdj,
wmanIf2BsOfdmaMaxPowerOffsetAdj,
wmanIf2BsOfdmaHandoverRangingCodes,
wmanIf2BsOfdmaInitialRangingInterval,
wmanIf2BsOfdmaTxPowerReport,
wmanIf2BsOfdmaNormalizedCnChSounding,
wmanIf2BsOfdmaInitialRngBackoffStart,
wmanIf2BsOfdmaInitialRngBackoffEnd,
wmanIf2BsOfdmaBwRequestBackoffStart,
wmanIf2BsOfdmaBwRequestBackoffEnd,
wmanIf2BsOfdmaUlPuscSubChRotation,
wmanIf2BsOfdmaRelPwrOffetUlHarqBurst,
wmanIf2BsOfdmaRelPwrOffetUlMacMgmtBurst,
wmanIf2BsOfdmaUlInitialTxTiming,
wmanIf2BsOfdmaUlPhyModeId,
wmanIf2BsOfdmaFastFeedbackRegion,
wmanIf2BsOfdmaHarqAckRegion,
wmanIf2BsOfdmaRangingRegion,
wmanIf2BsOfdmaSoundingRegion,
wmanIf2BsOfdmaMsTxPowerLimit,
wmanIf2BsOfdmaHfddGroupSwitchDelay,
wmanIf2BsOfdmaFrameOffset,
wmanIf2BsOfdmaNumOfPowerControlBits,
wmanIf2BsOfdmaFddDlInterGroupGap,
wmanIf2BsOfdmaFddPartitionChange,

-- Downlink Channel
wmanIf2BsOfdmaFrameDurationCode,
wmanIf2BsOfdmaHARQAckDelayULBurst,
wmanIf2BsOfdmaHarqZonePermutation,
wmanIf2BsOfdmaHMaxRetransmission,
wmanIf2BsOfdmaRssiCinrAvgParameter,
wmanIf2BsOfdmaDlAmcAlloPhyBandsBitmap,
wmanIf2BsOfdmaHandoverSupported,
wmanIf2BsOfdmaThresholdAddBsDivSet,
```

```
                wmanIf2BsOfdmaThresholdDelBsDivSet,
                wmanIf2BsOfdmaAsrSlotLength,
                wmanIf2BsOfdmaAsrSwitchingPeriod,
                wmanIf2BsOfdmaTtgTtdOrHfddGroup1,
                wmanIf2BsOfdmaTtgHfddGroup2,
                wmanIf2BsOfdmaRtgTtdOrHfddGroup1,
                wmanIf2BsOfdmaRtgHfddGroup2,

                -- UCD
                wmanIf2BsOfdmaUcdFecCodeType,
                wmanIf2BsOfdmaRangingDataRatio,
                wmanIf2BsOfdmaUcdBurstProfileRowStatus,

                -- DCD
                wmanIf2BsOfdmaDcdFecCodeType,
                wmanIf2BsOfdmaDcdBurstProfileRowStatus,
                wmanIf2BsOfdmaTsuc1ActSubchannelBitmap,
                wmanIf2BsOfdmaTsuc2ActSubchannelBitmap,
                wmanIf2BsOfdmaSymbolOffset,
                wmanIf2BsOfdmaSubchannelOffset,
                wmanIf2BsOfdmaNumberOfSymbol,
                wmanIf2BsOfdmaNumberOfSubchannel,
                wmanIf2BsOfdmaDcdDlRegionRowStatus,
                wmanIf2BsOfdmaCidDescriptor}
        STATUS       current
        DESCRIPTION
            "This group contains objects for OFDMA PHY."
        ::= { wmanIf2BsMibGroups 6 }

wmanIf2BsMibAmGroup     OBJECT-GROUP
        OBJECTS {wmanIf2BsServiceFlowId,
                wmanIf2BsMacSduCount,
                wmanIf2BsOctetCount,
                wmanIf2BsSessionEstablishTime,
                wmanIf2BsSessionTerminateTime,
                wmanIf2BsGlobalServiceClass,
                wmanIf2BsOtaQoSProfileIndex}
        STATUS       current
        DESCRIPTION
            "This group contains objects for Account Management."
        ::= { wmanIf2BsMibGroups 7 }

wmanIf2BsMibPkmGroup     OBJECT-GROUP
        OBJECTS {wmanIf2BsPkmScDataEncryptAlgorithm,
                wmanIf2BsPkmScDataAuthentAlgorithm,
                wmanIf2BsPkmScEncryptAlgorithm,
                wmanIf2BsSsPkmScDataEncryptAlgorithm,
                wmanIf2BsSsPkmScDataAuthentAlgorithm,
                wmanIf2BsSsPkmScEncryptAlgorithm}
        STATUS       current
        DESCRIPTION
            "This group contains objects for Security Management -
             common to PKMv1 and PKMv2."
        ::= { wmanIf2BsMibGroups 8 }
```



```
wmanIf2BsMibPkmV1Group     OBJECT-GROUP
        OBJECTS {wmanIf2BsPkmV1AkLifetime,
                 wmanIf2BsPkmV1TekLifetime,
                 wmanIf2BsPkmV1SelfSigManufCertTrust,
                 wmanIf2BsPkmV1AuthWaitTimeout,
                 wmanIf2BsPkmV1ReauthWaitTimeout,
                 wmanIf2BsPkmV1AuthGraceTime,
                 wmanIf2BsPkmV1OpWaitTimeout,
                 wmanIf2BsPkmV1RekeyWaitTimeout,
                 wmanIf2BsPkmV1TekGraceTime,
                 wmanIf2BsPkmV1AuthRejectWaitTimeout,
                 wmanIf2BsPkmV1CheckCertValidityPeriods,
                 wmanIf2BsSsPkmV1CaCertificate,
                 wmanIf2BsSsPkmV1SsCertificate,
                 wmanIf2BsSsPkmV1PrimarySaId,
                 wmanIf2BsSsPkmV1AuthKeySequenceNumber,
                 wmanIf2BsSsPkmV1AuthKeyLifetime,
                 wmanIf2BsSsPkmV1AuthRejectError,
                 wmanIf2BsSsPkmV1AuthInvalidError,
                 wmanIf2BsSsPkmV1AkN-1ExpireTime,
                 wmanIf2BsSsPkmV1AkNExpireTime,
                 wmanIf2BsSsPkmV1CertificateStatus,
                 wmanIf2BsSsPkmV1AuthReset,
                 wmanIf2BsSsPkmV1SaType,
                 wmanIf2BsSsPkmV1TekDataEncryptAlgorithm,
                 wmanIf2BsSsPkmV1TekDataAuthentAlgorithm,
                 wmanIf2BsSsPkmV1TekEncryptAlgorithm,
                 wmanIf2BsSsPkmV1TekN-1SequenceNumber,
                 wmanIf2BsSsPkmV1TekN-1Lifetime,
                 wmanIf2BsSsPkmV1TekNSequenceNumber,
                 wmanIf2BsSsPkmV1TekNLifetime,
                 wmanIf2BsSsPkmV1KeyRejectError,
                 wmanIf2BsSsPkmV1TekInvalidError,
                 wmanIf2BsSsPkmV1TekN-1ExpireTime,
                 wmanIf2BsSsPkmV1TekNExpireTime,
                 wmanIf2BsSsPkmV1TekReset}
        STATUS       current
        DESCRIPTION
            "This group contains objects for Security Management -
             PKMv1."
        ::= { wmanIf2BsMibGroups 9 }

wmanIf2BsMibPkmV2Group     OBJECT-GROUP
        OBJECTS {wmanIf2BsPkmPmkPrehandshakeLifetime,
                 wmanIf2BsPkmPmkLifetime,
                 wmanIf2BsSaChallengeTimeout,
                 wmanIf2BsMaxSaTekChallenge,
                 wmanIf2BsSaTekTimeout,
                 wmanIf2BsMaxSaTekRequest,
                 wmanIf2BsPkmV2AkLifetime,
                 wmanIf2BsPkmV2TekLifetime,
                 wmanIf2BsPkmV2AuthWaitTimeout,
                 wmanIf2BsPkmV2ReauthWaitTimeout,
```

```
                wmanIf2BsPkmV3AuthGraceTime,
                wmanIf2BsPkmV4OpWaitTimeout,
                wmanIf2BsPkmV2RekeyWaitTimeout,
                wmanIf2BsPkmV2TekGraceTime,
                wmanIf2BsPkmV2AuthRejectWaitTimeout,
                wmanIf2BsSsPkmV2BsCertificate,
                wmanIf2BsSsPkmV2SsCertificate,
                wmanIf2BsSsPkmV2SaId,
                wmanIf2BsSsPkmV2SsRandom,
                wmanIf2BsSsPkmV2BsRandom,
                wmanIf2BsSsPkmV2AuthKeySequenceNumber,
                wmanIf2BsSsPkmV2AuthKeyLifetime,
                wmanIf2BsSsPkmV2AuthResult,
                wmanIf2BsSsPkmV2AuthFailure,
                wmanIf2BsSsPkmV2AkN-1ExpireTime,
                wmanIf2BsSsPkmV2AkNExpireTime,
                wmanIf2BsSsPkmV2CertificateStatus,
                wmanIf2BsSsPkmV2SaType,
                wmanIf2BsSsPkmV2SaServiceType,
                wmanIf2BsSsPkmV2TekDataEncryptAlgorithm,
                wmanIf2BsSsPkmV2TekDataAuthentAlgorithm,
                wmanIf2BsSsPkmV2TekEncryptAlgorithm,
                wmanIf2BsSsPkmV2TekN-1SequenceNumber,
                wmanIf2BsSsPkmV2TekN-1Lifetime,
                wmanIf2BsSsPkmV2TekNSequenceNumber,
                wmanIf2BsSsPkmV2TekNLifetime,
                wmanIf2BsSsPkmV2TekInvalidError,
                wmanIf2BsSsPkmV2TekN-1ExpireTime,
                wmanIf2BsSsPkmV2TekNExpireTime,
                wmanIf2BsSsPkmV2SaTekBsRandom,
                wmanIf2BsSsPkmV2SaTekAkSequenceNumber,
                wmanIf2BsSsPkmV2SaTekAkId,
                wmanIf2BsSsPkmV2KeyLifetime,
                wmanIf2BsSsPkmV2SaTekMsRandom}
        STATUS       current
        DESCRIPTION
            "This group contains objects for Security Management -
             PKMv2."
        ::= { wmanIf2BsMibGroups 10 }

wmanIf2BsMibPmGroup     OBJECT-GROUP
        OBJECTS {wmanIf2BsGranularityInterval,
                wmanIf2BsCountersReportInterval,
                wmanIf2BsPmMeasurementBitMap,
                wmanIf2BsChannelNumber,
                wmanIf2BsStartFrame,
                wmanIf2BsDuration,
                wmanIf2BsBasicReport,
                wmanIf2BsMeanCinrReport,
                wmanIf2BsMeanRssiReport,
                wmanIf2BsStdDeviationCinrReport,
                wmanIf2BsStdDeviationRssiReport,
                wmanIf2BsAuthenAttempt,
                wmanIf2BsAuthenSuccess,
```



```
wmanIf2BsAuthenSuccessRate,
wmanIf2BsRangingAttempt,
wmanIf2BsRangingSuccess,
wmanIf2BsRangingSuccessRate,
wmanIf2BsAvgDlUserThroughput,
wmanIf2BsAvgUlUserThroughput,
wmanIf2BsAvgDlMacThroughput,
wmanIf2BsAvgUlMacThroughput,
wmanIf2BsAvgDlPhyThroughput,
wmanIf2BsAvgUlPhyThroughput,
wmanIf2BsPeakDlUserThroughput,
wmanIf2BsPeakUlUserThroughput,
wmanIf2BsPeakDlMacThroughput,
wmanIf2BsPeakUlMacThroughput,
wmanIf2BsPeakDlPhyThroughput,
wmanIf2BsPeakUlPhyThroughput,
wmanIf2BsAvgDlCellEdgeThroughput,
wmanIf2BsAvgUlCellEdgeThroughput,
wmanIf2BsThroughputMeasurements,
wmanIf2BsAvgNetworkEntryLatency,
wmanIf2BsMaxNetworkEntryLatency,
wmanIf2BsAvgNetworkReEntryLatency,
wmanIf2BsMaxNetworkReEntryLatency,
wmanIf2BsNumOfNetworkEntries,
wmanIf2BsNumOfNetworkReEntries,
wmanIf2BsDlPacketsSent,
wmanIf2BsDlPacketsErrored,
wmanIf2BsDlPacketErrorRate,
wmanIf2BsUlPacketsReceived,
wmanIf2BsUlPacketsErrored,
wmanIf2BsUlPacketErrorRate,
wmanIf2BsHandoverAttempt,
wmanIf2BsHandoverSuccess,
wmanIf2BsHandoverSuccessRate,
wmanIf2BsHandoverCancel,
wmanIf2BsHandoverReject,
wmanIf2BsHandoverCancelRate,
wmanIf2BsHandoverRejectRate,
wmanIf2BsUnexpectedHandover,
wmanIf2BsAvgHandoverTime,
wmanIf2BsMaxHandoverTime,
wmanIf2BsHandoverMeasurements,
wmanIf2BsActiveUsers,
wmanIf2BsMaxNormalModeUsers,
wmanIf2BsMaxSleepModeUsers,
wmanIf2BsMaxIdleModeUsers,
wmanIf2BsAvgNormalModeUsers,
wmanIf2BsUsersMeasurements,
wmanIf2BsBasicAndPrimaryCids,
wmanIf2BsMaximumUserCids,
wmanIf2BsAvgUserCids,
wmanIf2BsUsersCidMeasurements,
wmanIf2BsDsaReqCount,
wmanIf2BsDsaReqSuccess,
```

```
                wmanIf2BsDsaReqSuccessRate,
                wmanIf2BsDscReqCount,
                wmanIf2BsDscReqSuccess,
                wmanIf2BsDscReqSuccessRate,
                wmanIf2BsDsdReqCount,
                wmanIf2BsDsdReqSuccess,
                wmanIf2BsDsdReqSuccessRate,
                wmanIf2BsMaxActiveServiceFlow,
                wmanIf2BsAvgActiveServiceFlow,
                wmanIf2BsMaxProvisionedServiceFlow,
                wmanIf2BsAvgProvisioneServiceFlow,
                wmanIf2BsMaxDlServiceFlow,
                wmanIf2BsMaxUlServiceFlow,
                wmanIf2BsNumberOfSfidaAllocated,
                wmanIf2BsServiceFlowMeasurements,
                wmanIf2BsDlArqBlocks,
                wmanIf2BsDlArqBlockDropped,
                wmanIf2BsDlArqBlockErrorRate,
                wmanIf2BsDlArqBlockRetransmissions,
                wmanIf2BsDlArqBlockEfficiency,
                wmanIf2BsUlArqBlocks,
                wmanIf2BsUlArqBlockRetransmissions,
                wmanIf2BsUlArqBlockEfficiency,
                wmanIf2BsDlHarqBlocks,
                wmanIf2BsDlHarqBlockDropped,
                wmanIf2BsDlHarqBlockErrorRate,
                wmanIf2BsUlHarqBlocks,
                wmanIf2BsUlHarqBlockDropped,
                wmanIf2BsUlHarqBlockErrorRate,
                wmanIf2BsHmacUnauthenticated,
                wmanIf2BsCmacUnauthenticated,
                wmanIf2BsShortHmacUnauthenticated}
        STATUS       current
        DESCRIPTION
            "This group contains objects for performance Management."
        ::= { wmanIf2BsMibGroups 11 }
END
```


13.2.4 wmanIf2mBsMib

```
WMAN-IF2M-BS-MIB DEFINITIONS ::= BEGIN

  IMPORTS
        MODULE-IDENTITY,
        OBJECT-TYPE,
        Unsigned32, Integer32, Counter64
                FROM SNMPv2-SMI
        TEXTUAL-CONVENTION,
        MacAddress, RowStatus, TruthValue,
        TimeStamp, DateAndTime
                FROM SNMPv2-TC
        InetAddressType, InetAddress
                FROM INET-ADDRESS-MIB
        WmanIf2TcBsIdType, WmanIf2TcChannelNumber,
        WmanIf2TcCidType, WmanIf2TcCsType,
        WmanIf2TcIpv6FlowLabel, WmanIf2TcPhsRuleVerify,
        WmanIf2TcSchedulingType, WmanIf2TcGlobalSrvClass,
        WmanIf2TcHarqAckDelay, WmanIf2TcMacVersion,
        WmanIf2TcOfdmaCp, WmanIf2TcOfdmaFftSize,
        WmanIf2TcOfdmaFrame, WmanIf2TcReqTxPolicy,
        WmanIf2TcSfDirection, WmanIf2TcFrameOffset,
        WmanIf2TcPwrCntlBits, WmanIf2TcFddDlGrpGap,
        WmanIf2TcAasBeamSel, WmanIf2TcTxPowerReport,
        WmanIf2TcFastFeedback, WmanIf2TcHarqAckRegion,
        WmanIf2TcRangingRegion, WmanIf2TcSoundingRegion,
        WmanIf2TcRssiCinrAvg, WmanIf2TcMihCapability,
        WmanIf2TcHoSupportType, WmanIf2TcPermutationTyp,
        WmanIf2TcArqBlockSize, WmanIf2TcSduType,
        WmanIf2TcFsnType, WmanIf2TcMbsType,
        WmanIf2TcSfState, WmanIf2TcClassifierMap,
        WmanIf2TcUlPhyModeId, WmanIf2TcArqDelvInOrder,
        WmanIf2TcCellType, WmanIf2TcPwrCntlMode,
        WmanIf2TcCidDescriptor, WmanIf2TcActionRule,
        WmanIf2TcIpTypOfServ, WmanIf2TcEthernetType
                FROM WMAN-IF2-TC-MIB
        OBJECT-GROUP,
        MODULE-COMPLIANCE
                FROM SNMPv2-CONF
        ifIndex
                FROM IF-MIB;

wmanIf2mBsMib MODULE-IDENTITY
        LAST-UPDATED    "200901280000Z" -- January 28, 2009
        ORGANIZATION    "IEEE 802.16"
        CONTACT-INFO
            "WG E-mail:  stds-802-16@ieee.org
             WG Chair:   Roger B. Marks
             Postal:     WiMAX Forum
             E-mail:     r.b.marks@ieee.org

             TG Chair:   Jonathan Labs
             Postal:     Wavesat Inc.
```

```
             E-mail:     JLabs@wavesat.com

             TG Contact: Phillip Barber
             Postal:     Huawei Technologies Co., Ltd
             E-mail:     pbarber@Huawei.com

             Editor:     Joey Chou
             Postal:     Intel Corporation
                         5000 W. Chandler Blvd,
                         Chandler, AZ 85227, USA
             E-mail:     joey.chou@intel.com"
        DESCRIPTION
            "This MIB Module defines managed objects for Base Station
             based on IEEE Std 802.16. The MIB contains managed objects
             that are specific to mobile Broadband Wireless Networks."
        REVISION        "200901280000Z"
        DESCRIPTION
            "Includes changeas per comment resolutions agreed at the
             San Diego meeting"
        REVISION        "200812010000Z"
        DESCRIPTION
            "Includes changeas per comment resolutions agreed at the
             Dallas meeting"
        REVISION        "200810010000Z"
        DESCRIPTION
            "Includes changeas per comment resolutions agreed at the
             Kobe meeting"
        REVISION        "200807220000Z"
        DESCRIPTION
            "Includes changes as per comment resolutions agreed at the
             Denver meeting"
        REVISION        "200805270000Z"
        DESCRIPTION
            "Includes changes as per comment resolutions agreed at the
             Macau meeting"
        REVISION        "200803310000Z"
        DESCRIPTION
            "Includes changes as per comment resolutions agreed at the
             Orlando meeting"
        REVISION        "200802110000Z"
        DESCRIPTION
            "Includes changes as per comment resolutions agreed at the
             Levi meeting"
        REVISION        "200711300000Z"
        DESCRIPTION
            "The 1st revision of WMAN-IF2M-BS-MIB module."
        ::= { iso std(0) iso8802(8802) wman(16) 3 }

wmanIf2mMibObjects OBJECT IDENTIFIER ::= { wmanIf2mBsMib 1 }
wmanIf2mBsCm       OBJECT IDENTIFIER ::= { wmanIf2mMibObjects 1 }
wmanIf2mBsPm       OBJECT IDENTIFIER ::= { wmanIf2mMibObjects 2 }
wmanIf2mBsFm       OBJECT IDENTIFIER ::= { wmanIf2mMibObjects 3 }
wmanIf2mBsSm       OBJECT IDENTIFIER ::= { wmanIf2mMibObjects 4 }
wmanIf2mBsAm       OBJECT IDENTIFIER ::= { wmanIf2mMibObjects 5 }
```



```
--
-- Textual Conventions
--
WmanIf2mOfdmaMobility ::= TEXTUAL-CONVENTION
        STATUS      current
        DESCRIPTION
            "This field indicates whether or not the MS supports
             mobility hand-over, Sleep-mode, and Idle-mode. A bit value
             of 0 indicates 'not supported' while 1 indicates it is
             supported."
        REFERENCE
            "Subclause 11.7.13.1"
        SYNTAX      BITS {handoverSupport(0),
                          sleepModeSupport(1),
                          idleModeSupport(2)}

WmanIf2mHandoverType ::= TEXTUAL-CONVENTION
        STATUS      current
        DESCRIPTION
            "Indicates what type(s) of Handover the BS and the MS
             supports.
             bit 0: if set to 1, MDHO/FBSS HO not supported, the BS
                    shall ignore all other bits.
             bit 1: if set to 1, FBSS/MDHO DL RF Combining is supported
                    with monitoring MAPs from active BSs
             bit 2: if set to 1, MDHO DL soft Combining is supported
                    with monitoring single MAP from anchor BS
             bit 3: if set to 1, MDHO DL soft combining is supported
                    with monitoring MAPs from active BSs
             bit 4: if set to 1, MDHO UL Multiple transmission is
                    supported
             bit 5: If set to 1, seamless HO is supported
             bit 6: If set to 1, additional action time is supported"
        REFERENCE
            "Subclause 11.7.12.5"
        SYNTAX      BITS {mdhcFbssHoNotSpported(0),
                          mdhcFbssDlMapsFromActiveBss(1),
                          mdhcDlMapFromAnchorBs(2),
                          mdhcDlMapsFromActiveBss(3),
                          mdhcUlMultipleTx(4),
                          seamlessHo(5),
                          additionalActionTime(6)}

WmanIf2mPsClassId ::= TEXTUAL-CONVENTION
        STATUS      current
        DESCRIPTION
            "Indicates the index to Power Saving Classes. The ID shall
             be unique within the group of Power Saving Classes
             associated with the MS. This ID may be used in further
             MOB_SLP-REQ/RSP messages for activation / deactivation of
             Power Saving Class."
        REFERENCE
            "Subclause 6.3.2.3.40"
```

```
        SYNTAX      Integer32 (0..63)

WmanIf2mPsClassType ::= TEXTUAL-CONVENTION
        STATUS      current
        DESCRIPTION
            "The types of power saving classes."
        REFERENCE
            "Subclause 6.3.2.3.39"
        SYNTAX      INTEGER {powerSavingClassTypeI(1),
                             powerSavingClassTypeII(2),
                             powerSavingClassTypeIII(3)}

WmanIf2mPsClassCidDir ::= TEXTUAL-CONVENTION
        STATUS      current
        DESCRIPTION
            "The direction of power saving class's CIDs.
             0b00 = Unspecified. Each CID has its own direction assign
                    in its connection creation. Can be DL, UL, or both
                    (in the case of management connections).
             0b01 = Downlink direction only.
             0b10 = Uplink direction only."
        REFERENCE
            "Subclause 6.3.2.3.39"
        SYNTAX      INTEGER {unspecified(0),
                             downlink(1),
                             uplink(2)}

WmanIf2mPowerSavingMode ::= TEXTUAL-CONVENTION
        STATUS      current
        DESCRIPTION
            "Operation of Power saving class mode.
                 0 = Deactivation of power saving class
                     (for types 1 and 2 only).
                 1 = Activation of power saving class."
        REFERENCE
            "Subclause 6.3.2.3.40"
        SYNTAX      INTEGER {deactionPs(0),
                             actionPs(1)}

WmanIf2mSkipOptBitMap ::= TEXTUAL-CONVENTION
        STATUS      current
        DESCRIPTION
            "If set to 1, its corresponding field will be omitted."
        REFERENCE
            "Subclause 6.3.2.3.42"
        SYNTAX      BITS {omitOperatorId(0),
                          omitNeighborBsId(1),
                          omitHoProcOptimization(2),
                          omitQosRelatedField(3)}

WmanIf2mNbrBsId ::= TEXTUAL-CONVENTION
        STATUS      current
        DESCRIPTION
            "The least significant 24 bits of the Base Station ID
```



```
             parameter in the DL-MAP message broadcast by the Neighbor
             BS. The BSID is a 6 byte number and follows the encoding
             rules of MacAddress textual convention, i.e. as if it were
             transmitted least-significant bit first. The value should
             be displayed with 2 parts clearly separated by a colon.
             Example 001DFF:00003A - 00003A is the Base Station ID. "
        REFERENCE
            "Subclause 6.3.2.3.42"
        SYNTAX      OCTET STRING (SIZE(3))

WmanIf2mNbrOperatorId ::= TEXTUAL-CONVENTION
        STATUS      current
        DESCRIPTION
            "The most significant 24 bits of the Base Station ID
             parameter in the DL-MAP message broadcast by the Neighbor
             BS. The BSID is a 6 byte number and follows the encoding
             rules of MacAddress textual convention, i.e. as if it were
             transmitted least-significant bit first. The value should
             be displayed with 2 parts clearly separated by a colon.
             Example 001DFF:00003A - 001DFF is the Operator ID. "
        REFERENCE
            "Subclause 6.3.2.3.42"
        SYNTAX      OCTET STRING (SIZE(3))

WmanIf2mPhyProfileId ::= TEXTUAL-CONVENTION
        STATUS      current
        DESCRIPTION
            "For systems using OFDM or OFDMA, the definition of the PHY
             Profile ID is shown as follows:
             bit 0: If set to 1, BS (or FA) is co-located with the
                    serving BS
             bit 1: If set to 1, the BS has the same number of FAs and
                    frequencies as the BS broadcasting the NBR-ADV
             bit 2: 0b00 = Unsynchronized
             bit 3: 0b01 = Time synchronization
                    0b10 = Time and Frequency synchronization
                    If time synchronization is indicated for the OFDMA
                    PHY, then the downlink frames transmitted by the
                    serving BS and the Neighbor BS shall be synchronized
                    to a level of at least 1/8 cyclic prefix length. If
                    frequency synchronization is indicated for the OFDMA
                    PHY, then the BS reference clocks shall be
                    synchronized to a level that yields RF center
                    frequency offset of no more than 1% of the OFDMA
                    carrier spacing of the Neighbor BS.
             bit 4: If set to 1, the BS EIRP follows the PHY Profile ID
             bit 5: 0b0- The DCD/UCD settings of this neighbor BS are
                         the same as those of the serving BS unless the
                         TLV information specifies.
                    0b1- The DCD/UCD settings of this neighbor BS are
                         the same as those of the preceding neighbor BS
                         unless the TLV information specifies.
            bit 6: If set to 1, the FA Index follows the PHY Profile ID.
                    In addition, if the FA Indicator is followed, the DL
```

```
                    center frequency shall be omitted in the DCD/UCD
                    difference TLV information.
             bit 7: The Trigger Reference Indicator is related to the
                    Neighbor BS trigger metric TLV information of this
                    neighbor BS.
                    0b0- The trigger settings of this neighbor BS are
                         the same as those provided by the serving BS
                         (via DCD).If the TLV information is present, it
                         overrides values inherited from preceding
                         neighbor BS.
                    0b1- The trigger settings of this neighbor BS are
                        the same as those of the preceding neighbor BS."
        REFERENCE
            "Subclause 6.3.2.3.42, Table 144"
        SYNTAX      BITS {colocatedFaInd(0),
                          faConfigInd(1),
                          timeFreqSyncInd1(2),
                          timeFreqSyncInd2(3),
                          bsEirpInd(4),
                          dcdUcdRefInd(5),
                          faIndexInd(6),
                          triggRefInd(7)}


WmanIf2mHoProcOptm ::= TEXTUAL-CONVENTION
        STATUS      current
        DESCRIPTION
            "For each Bit location, a value of '0' indicates the
             associated reentry management messages shall be required,
             a value of '1' indicates the reentry management message may
             be omitted. Regardless of the HO Process Optimization TLV
            settings, the target BS may send unsolicited SBC-RSP and/ or
             REG-RSP management messages
             bit 0: Omit SBC-REQ/RSP management messages during re-entry
                    processing
            bit 1: Omit PKM Authentication phase except TEK phase during
                    current re-entry processing
            bit 2: Omit PKM TEK creation phase during reentry processing
             bit 3: Omit REG-REQ/RSP management during current re-entry
                    processing
             bit 4: Omit Network Address Acquisition management messages
                    during current reentry processing
             bit 5: Omit Time of Day Acquisition management messages
                    during current reentry processing
            bit 6: Omit TFTP management messages during current re-entry
                    processing
             bit 7: Full service and operational state transfer or
                   sharing between serving BS and target BS (ARQ, timers
                    , counters, MAC state machines, etc...)"
        REFERENCE
            "Subclause 6.3.2.3.42, Table 144"
        SYNTAX      BITS {omitSbcReq(0),
                          omitPkmAuth(1),
                          omitPkmTek(2),
```



```
                        omitRegReq(3),
                        omitNtwkAddrAcq(4),
                        omitTimeOfDay(5),
                        omitTftp(6),
                        fullService(7)}

WmanIf2mSchedulingSupp ::= TEXTUAL-CONVENTION
        STATUS      current
        DESCRIPTION
            "Bitmap to indicate if BS supports a particular scheduling
             service. 1 indicates support, 0 indicates not support:

             bit 0: Unsolicited Grant Service (UGS)
             bit 1: Real-time Polling Service (rtPS)
             bit 2: Non-real-time Polling Service (nrtPS)
             bit 3: Best Effort
             bit 4: Extended real-time Polling Service (ertPS)

             If the value of bit 0 through bit 4 is 0b00000, it indicates
             no information on service available."
        REFERENCE
            "Subclause 6.3.2.3.42, Table 144"
        SYNTAX      BITS {ugs(0),
                        rtPs(1),
                        nrtPs(2),
                        be(3),
                        ertPs(4)}

WmanIf2mPowerSaveType ::= TEXTUAL-CONVENTION
        STATUS      current
        DESCRIPTION
            "For MS supporting sleep mode, this parameter defines the
             capability of the MS supporting different power save class
             types in sleep mode.
             A bit 0 - 'not supported'
                   1 - 'supported'"
        REFERENCE
            "Subclause 11.7.13.2"
        SYNTAX      BITS {psClassTypeI(0),
                        psClassTypeII(1),
                        psClassTypeIII(2),
                        multiplePsClass(3)}

WmanIf2mHoTrigMetric ::= TEXTUAL-CONVENTION
        STATUS      current
        DESCRIPTION
            "This field indicates trigger metrics that MS or BS supports.
             A bit 0 - 'not supported'
                   1 - 'supported'"
        REFERENCE
            "Subclause 11.8.6"
        SYNTAX      BITS {bsCinrMean(0),
                        bsRssiMean(1),
                        relativeDelay(2),
```

```
                          bsRoundTripDelay(3)}

WmanIf2mAssociationTyp ::= TEXTUAL-CONVENTION
        STATUS      current
        DESCRIPTION
            "This field indicates the association level supported by the
             MS or the BS. If a bit is set to '1', then MS or BS
             indicates support at the respective association type and
             level. The MS may associate according to arrangements by
             the BS at levels up to and including the one for which the
             MS has indicated support."
        REFERENCE
            "Subclause 11.8.7"
        SYNTAX      BITS {scanWoAssociation(0),
                          scanOrAssocWoCoordination(1),
                          assocWithCoordination(2),
                          ntwkAssistAssociation(3),
                          directAssociation(4)}

WmanIf2mPagingAction ::= TEXTUAL-CONVENTION
        STATUS      current
        DESCRIPTION
            "Paging action instruction to MS
             0b00 = No Action Required
             0b01 = Perform Ranging to establish location and
                    acknowledge message
             0b10 = Enter Network"
        REFERENCE
            "Subclause 6.3.2.3.51, Table 154"
        SYNTAX      INTEGER {noAction(0),
                             performRanging(1),
                             enterNetwork(2)}

WmanIf2mSsMacAddrHash ::= TEXTUAL-CONVENTION
        STATUS      current
        DESCRIPTION
            "24 bit SS MAC address hash that is obtained by computing a
             CRC24 on the MS 48-bit MAC address."
        REFERENCE
            "Subclause 6.3.2.3.51, Table 154"
        SYNTAX      OCTET STRING (SIZE(3))

WmanIf2mReportMode ::= TEXTUAL-CONVENTION
        STATUS      current
        DESCRIPTION
            "Action code for an MS's report of CINR measurement:

             0b00: The MS measures channel quality of the Available BSs
                   without reporting.
             0b01: The MS reports the result of the measurement to
                   Serving BS periodically. The period of reporting is
                   different from that of scanning.
             0b10: The MS reports the result of the measurement to
                   Serving BS after each measurement.
```



```
             0b11  One-time scan report"
        REFERENCE
            "Subclause 6.3.2.3.44"
        SYNTAX      INTEGER {noReport(0),
                             periodicReport(1),
                             eventTriggeredReport(2),
                             oneTimeScannReport(4)}

WmanIf2mReportMetric ::= TEXTUAL-CONVENTION
        STATUS      current
        DESCRIPTION
            "Bitmap indicator of trigger metrics that the serving BS
             requests the MS to report. Serving BS shall indicate only
             the trigger metrics agreed during SBC-REQ/RSP negotiation.
             Each bit indicates whether reports will be initiated by
             trigger based on the corresponding metric:

               Bit 0:    BS CINR mean
               Bit 1:    BS RSSI mean
               Bit 2:    Relative delay
               Bit 3:    BS RTD; this metric shall be only measured on
                         serving BS/anchor BS"
        REFERENCE
            "Subclause 6.3.2.3.45"
        SYNTAX      BITS {bsCinrMean(0),
                          bsRssiMean(1),
                          relativeDelay(2),
                          bsRtd(3)}

WmanIf2mScanType ::= TEXTUAL-CONVENTION
        STATUS      current
        DESCRIPTION
            "Type of scanning or association used by the MS and
             coordinated by the Serving BS:

             0b000: Scanning without Association Scanning
             0b001: Scanning with Association level 0: association
                    without coordination
             0b010: Scanning with Association level 1: association
                    with coordination
             0b011: Scanning with Association level 2: network assisted
                    association"
        REFERENCE
            "Subclause 6.3.2.3.44"
        SYNTAX      INTEGER {scanWoAssociation(0),
                             scanWithAssociation0(1),
                             scanWithAssociation1(2),
                             scanWithAssociation2(3)}

WmanIf2mTrafficWkFlag ::= TEXTUAL-CONVENTION
        STATUS      current
        DESCRIPTION
            "Traffic Triggered Wakening flag"
        REFERENCE
```

```
            "Subclause 6.3.19.40"
        SYNTAX      INTEGER {psNotBeDeactivated(1),
                             psBeDeactivated(2)}

WmanIf2mNspId ::= TEXTUAL-CONVENTION
        STATUS      current
        DESCRIPTION
            "24-bit Network Service Provider Identifiers "
        REFERENCE
            "Subclause 11.1.10.1"
        SYNTAX      OCTET STRING (SIZE(3))

WmanIf2mLocationUnits ::= TEXTUAL-CONVENTION
        STATUS      current
        DESCRIPTION
            "Longitude / Latitude bit definitions
             Bits #0-5:  Longitude / Latitude resolution
                         1-34 - number of valid bits in fixed-point
                                value of longitude value
                           35 - LBS not supported
                      Others - reserved
             Bits #6-14:  Longitude / Latitude integer
             Bits #15-39: Longitude / Latitude fraction"
        REFERENCE
            "Subclause 11.21.1, Table 613"
        SYNTAX      BITS {resolution0(0),
                          resolution1(1),
                          resolution2(2),
                          resolution3(3),
                          resolution4(4),
                          resolution5(5),
                          integer0(6),
                          integer1(7),
                          integer2(8),
                          integer3(9),
                          integer4(10),
                          integer5(11),
                          integer6(12),
                          integer7(13),
                          integer8(14),
                          fraction0(15),
                          fraction1(16),
                          fraction2(17),
                          fraction3(18),
                          fraction4(19),
                          fraction5(20),
                          fraction6(21),
                          fraction7(22),
                          fraction8(23),
                          fraction9(24),
                          fraction10(25),
                          fraction11(26),
                          fraction12(27),
                          fraction13(28),
```



```
                        fraction14(29),
                        fraction15(30),
                        fraction16(31),
                        fraction17(32),
                        fraction18(33),
                        fraction19(34),
                        fraction20(35),
                        fraction21(36),
                        fraction22(37),
                        fraction23(38),
                        fraction24(39)}

WmanIf2mAttitude ::= TEXTUAL-CONVENTION
        STATUS      current
        DESCRIPTION
            "altitude bit definitions
             Bits #0-3:   altitude type
                          1 - meters
                          2 - floors
                   Others - reserved
             Bits #4-9:   altitude resolution
                          1-30 - number of valid bits in fixed-point
                                 value of altitude value
                            31 - LBS not supported
                        Others - reserved
             Bits #10-31: altitude integer
             Bits #32-39: altitude fraction"
        REFERENCE
            "Subclause 11.21.1, Table 613"
        SYNTAX      BITS {attitudeType0(0),
                          attitudeType1(1),
                          attitudeType2(2),
                          attitudeType3(3),
                          resolution0(4),
                          resolution1(5),
                          resolution2(6),
                          resolution3(7),
                          resolution4(8),
                          resolution5(9),
                          integer0(10),
                          integer1(11),
                          integer2(12),
                          integer3(13),
                          integer4(14),
                          integer5(15),
                          integer6(16),
                          integer7(17),
                          integer8(18),
                          integer9(19),
                          integer10(20),
                          integer11(21),
                          integer12(22),
                          integer13(23),
                          integer14(24),
```

```
                          integer15(25),
                          integer16(26),
                          integer17(27),
                          integer18(28),
                          integer19(29),
                          integer20(30),
                          integer21(31),
                          fraction0(32),
                          fraction1(33),
                          fraction2(34),
                          fraction3(35),
                          fraction4(36),
                          fraction5(37),
                          fraction6(38),
                         fraction7(39)}

--
-- wmanIf2mBsCm contain the Base Station Configuration Management
-- objects
--

--
-- Base Station configuration
--
wmanIf2mBsConfiguration OBJECT IDENTIFIER ::= { wmanIf2mBsCm 1 }

--
-- wmanIf2mBsConfigurationTable contains global parameters for BS
--
wmanIf2mBsConfigurationTable OBJECT-TYPE
        SYNTAX      SEQUENCE OF WmanIf2mBsConfigurationEntry
        MAX-ACCESS  not-accessible
        STATUS      current
        DESCRIPTION
            "This table contains one row for the BS system parameters."
        REFERENCE
            "Subclause 10.1, Table 553"
        ::= { wmanIf2mBsConfiguration 1 }

wmanIf2mBsConfigurationEntry OBJECT-TYPE
        SYNTAX      WmanIf2mBsConfigurationEntry
        MAX-ACCESS  not-accessible
        STATUS      current
        DESCRIPTION
            ""
        INDEX     { ifIndex }
        ::= { wmanIf2mBsConfigurationTable 1 }

WmanIf2mBsConfigurationEntry ::= SEQUENCE {
        wmanIf2mBsMobNbrAdvInterval             Integer32,
        wmanIf2mBsAscAgingTimer                 Integer32,
        wmanIf2mBsPagingRetryCount              Integer32,
        wmanIf2mBsModeSelectFeedbackProcTime    Integer32,
        wmanIf2mBsIdleModeSystemTimer           Unsigned32,
```



```
        wmanIf2mBsMgmtResourceHoldingTimer      Integer32,
        wmanIf2mBsDregCommandRetryCount         Integer32,
        wmanIf2mBsT46Timer                      Integer32,
        wmanIf2mBsT47Timer                      Integer32,
        wmanIf2mBsPagingInterval                Integer32,
        wmanIf2mBsT55Timer                      Integer32,
        wmanIf2mBsMihMaxCycles                  Integer32,
        wmanIf2mBs2ndMgmtDlQoSProfileIndex      Integer32,
        wmanIf2mBs2ndMgmtUlQoSProfileIndex      Integer32,
        wmanIf2mBsBasicCidDlQosProfileIndex     Integer32,
        wmanIf2mBsBasicCidUlQosProfileIndex     Integer32,
        wmanIf2mBsPrimaryCidDlQosProfileIndex   Integer32,
        wmanIf2mBsPrimaryCidUlQosProfileIndex   Integer32}

wmanIf2mBsMobNbrAdvInterval OBJECT-TYPE
        SYNTAX      Integer32 (1 .. 30)
        UNITS       "seconds"
        MAX-ACCESS  read-write
        STATUS      current
        DESCRIPTION
            "Nominal time between transmission of MOB_NBR-ADV messages"
        ::= { wmanIf2mBsConfigurationEntry 1 }

wmanIf2mBsAscAgingTimer OBJECT-TYPE
        SYNTAX      Integer32 (100 .. 10000)
        UNITS       "milliseconds"
        MAX-ACCESS  read-write
        STATUS      current
        DESCRIPTION
            "Nominal time for aging of MS associations"
        ::= { wmanIf2mBsConfigurationEntry 2 }

wmanIf2mBsPagingRetryCount OBJECT-TYPE
        SYNTAX      Integer32 (1 .. 16)
        MAX-ACCESS  read-write
        STATUS      current
        DESCRIPTION
            "Number of retries on paging transmission. If the BS does
             not receive RNG-REQ from the MS until this value decreases
             to zero, it determines that the MS is unavailable."
        DEFVAL      { 3 }
        ::= { wmanIf2mBsConfigurationEntry 3 }

wmanIf2mBsModeSelectFeedbackProcTime OBJECT-TYPE
        SYNTAX      Integer32 (1 .. 65535)
        UNITS       "microseconds"
        MAX-ACCESS  read-write
        STATUS      current
        DESCRIPTION
            "The time allowed between the end of the burst carrying the
             Mode Selection Feedback subheader and the start of the UL
             subframe carrying the Mode Selection Feedback response.
             Minimum value = 1 frame duration for TDD
                             1/2 Frame duration for FDD"
```

```
        ::= { wmanIf2mBsConfigurationEntry 4 }

wmanIf2mBsIdleModeSystemTimer OBJECT-TYPE
        SYNTAX      Unsigned32 (128 .. 65536)
        UNITS       "seconds"
        MAX-ACCESS  read-write
        STATUS      current
        DESCRIPTION
            "For BS acting as Paging Controller, timed interval to
             receive notification of MS Idle Mode Location Update. Set
             timer to MS Idle Mode Timeout. Timer recycles on
             successful Idle Mode Location Update."
        DEFVAL      { 4096 }
        ::= { wmanIf2mBsConfigurationEntry 5 }

wmanIf2mBsMgmtResourceHoldingTimer OBJECT-TYPE
        SYNTAX      Integer32 (1 .. 1000)
        UNITS       "milliseconds"
        MAX-ACCESS  read-write
        STATUS      current
        DESCRIPTION
            "Time the BS maintain connection information with the MS
             after the BS send DREG-CMD to the MS."
        DEFVAL      { 500 }
        ::= { wmanIf2mBsConfigurationEntry 6 }

wmanIf2mBsDregCommandRetryCount OBJECT-TYPE
        SYNTAX      Integer32 (3 .. 16)
        MAX-ACCESS  read-write
        STATUS      current
        DESCRIPTION
            "Number of retries on DREG Command Message."
        DEFVAL      { 3 }
        ::= { wmanIf2mBsConfigurationEntry 7 }

wmanIf2mBsT46Timer OBJECT-TYPE
        SYNTAX      Integer32 (1 .. 65535)
        UNITS       "milliseconds"
        MAX-ACCESS  read-write
        STATUS      current
        DESCRIPTION
            "Time the BS waits for DREG-REQ in case of unsolicited Idle
             Mode initiation from BS."
        ::= { wmanIf2mBsConfigurationEntry 8 }

wmanIf2mBsT47Timer OBJECT-TYPE
        SYNTAX      Integer32 (8 .. 1024)
        UNITS       "frames"
        MAX-ACCESS  read-write
        STATUS      current
        DESCRIPTION
            "PMC_RSP Timer: BS shall send the PMC_RSP before T47 + 1
             frames after BS receives PMC_REQ (confirmation = 0)
             correctly."
```



```
        DEFVAL      { 64 }
        ::= { wmanIf2mBsConfigurationEntry 9 }

wmanIf2mBsPagingInterval OBJECT-TYPE
        SYNTAX      Integer32 (1 .. 5)
        UNITS       "frames"
        MAX-ACCESS  read-write
        STATUS      current
        DESCRIPTION
            "Time duration of Paging Interval of the BS."
        ::= { wmanIf2mBsConfigurationEntry 10 }

wmanIf2mBsT55Timer OBJECT-TYPE
        SYNTAX      Integer32 (8 .. 65535)
        UNITS       "frames"
        MAX-ACCESS  read-write
        STATUS      current
        DESCRIPTION
            "This timer starts in the frame where the MS expects to
             receive the Fast Ranging IE. Upon expiration of this timer
             , the MS shall not expect the Target BS to grant an UL
             allocation via the Fast Ranging IE and shall release the
             HO ID."
        ::= { wmanIf2mBsConfigurationEntry 11 }

wmanIf2mBsMihMaxCycles OBJECT-TYPE
        SYNTAX      Integer32 (3 .. 65535)
        UNITS       "cycles"
        MAX-ACCESS  read-write
        STATUS      current
        DESCRIPTION
            "The maximum number of cycles that an MS waits for an MIH
             response during initial entry."
        DEFVAL      { 3 }
        ::= { wmanIf2mBsConfigurationEntry 12 }

wmanIf2mBs2ndMgmtDlQoSProfileIndex OBJECT-TYPE
        SYNTAX      Integer32 (1..65535)
        MAX-ACCESS  read-write
        STATUS      current
        DESCRIPTION
            "This object defines the index of a row in
             wmanIf2mBsQoSProfileTable which is used to obtain all QoS
             parameters required for the BS downlink scheduler to
             properly allocate and manage the bandwidth and schedule
             the 2nd Management Connection traffic. The 2nd Management
             Connection traffic doesn't differ from Traffic Connection
             traffic in the area of QoS management."
        ::= { wmanIf2mBsConfigurationEntry 13 }

wmanIf2mBs2ndMgmtUlQoSProfileIndex OBJECT-TYPE
        SYNTAX      Integer32 (1..65535)
        MAX-ACCESS  read-write
        STATUS      current
```

```
        DESCRIPTION
            "This object defines the index of a row in
             wmanIf2mBsQoSProfileTable which is used to obtain all QoS
             parameters required for the BS uplink scheduler to
             properly allocate and manage the bandwidth and schedule
             the 2nd Management Connection traffic. The 2nd Management
             Connection traffic doesn't differ from Traffic Connection
             traffic in the area of QoS management."
        ::= { wmanIf2mBsConfigurationEntry 14 }

wmanIf2mBsBasicCidDlQosProfileIndex OBJECT-TYPE
        SYNTAX      Integer32 (1 .. 65535)
        MAX-ACCESS  read-write
        STATUS      current
        DESCRIPTION
            "This index points to an entry in wmanIf2mBsQoSProfileTable
             that defines the QoS parameter set for downlink basic CID."
        ::= { wmanIf2mBsConfigurationEntry 15 }

wmanIf2mBsBasicCidUlQosProfileIndex OBJECT-TYPE
        SYNTAX      Integer32 (1 .. 65535)
        MAX-ACCESS  read-write
        STATUS      current
        DESCRIPTION
            "This index points to an entry in wmanIf2mBsQoSProfileTable
             that defines the QoS parameter set for uplink basic CID."
        ::= { wmanIf2mBsConfigurationEntry 16 }

wmanIf2mBsPrimaryCidDlQosProfileIndex OBJECT-TYPE
        SYNTAX      Integer32 (1 .. 65535)
        MAX-ACCESS  read-write
        STATUS      current
        DESCRIPTION
            "This index points to an entry in wmanIf2mBsQoSProfileTable
             that defines the QoS parameter set for downlink primary CID
             ."
        ::= { wmanIf2mBsConfigurationEntry 17 }

wmanIf2mBsPrimaryCidUlQosProfileIndex OBJECT-TYPE
        SYNTAX      Integer32 (1 .. 65535)
        MAX-ACCESS  read-write
        STATUS      current
        DESCRIPTION
            "This index points to an entry in wmanIf2mBsQoSProfileTable
             that defines the QoS parameter set for uplink primary CID."
        ::= { wmanIf2mBsConfigurationEntry 18 }

wmanIf2mBsSsReqCapabilitiesTable OBJECT-TYPE
        SYNTAX      SEQUENCE OF WmanIf2mBsSsReqCapabilitiesEntry
        MAX-ACCESS  not-accessible
        STATUS      current
        DESCRIPTION
            "This table contains the SS's capabilities that are
             necessary for supporting mobility. SS reports these
```



```
             capabilities in the REG-REQ messages."
        REFERENCE
            "Subclause 6.3.2.3.7"
        ::= { wmanIf2mBsConfiguration 2 }

wmanIf2mBsSsReqCapabilitiesEntry OBJECT-TYPE
        SYNTAX      WmanIf2mBsSsReqCapabilitiesEntry
        MAX-ACCESS  not-accessible
        STATUS      current
        DESCRIPTION
            "This table provides one row for each SS that has entered
             and registered into the BS. The primary index is the
             ifIndex with an ifType of ieee80216WMAN, indicating the BS
             sector with which the SS is associated.
             wmanIf2mBsSsMacAddress identifies the SS being registered."
        INDEX     { ifIndex, wmanIf2mBsSsMacAddress }
        ::= { wmanIf2mBsSsReqCapabilitiesTable 1 }

WmanIf2mBsSsReqCapabilitiesEntry ::= SEQUENCE {
        wmanIf2mBsSsReqCapHandoverSupported     WmanIf2mHandoverType,
        wmanIf2mBsSsReqCapHoProcessTimer        Unsigned32,
        wmanIf2mBsSsReqCapMobilityFeature       WmanIf2mOfdmaMobility,
        wmanIf2mBsSsReqCapSleepRecoveryTime     Unsigned32,
        wmanIf2mBsSsReqCapPreviousIpAddr        OCTET STRING,
        wmanIf2mBsSsReqCapIdleModeTimeout       Unsigned32,
        wmanIf2mBsSsReqCapHoConnProcessTime     Unsigned32,
        wmanIf2mBsSsReqCapHoTekProcessTime      Unsigned32,
        wmanIf2mBsSsReqCapPowerSavingType       WmanIf2mPowerSaveType,
        wmanIf2mBsSsReqCapNumOfPsClass          Integer32,
        wmanIf2mBsSsReqCapHoTrigMetric          WmanIf2mHoTrigMetric,
        wmanIf2mBsSsReqCapAssociationType       WmanIf2mAssociationTyp}

wmanIf2mBsSsReqCapHandoverSupported OBJECT-TYPE
        SYNTAX      WmanIf2mHandoverType
        MAX-ACCESS  read-only
        STATUS      current
        DESCRIPTION
            "Indicates what type(s) of Handover the BS or MS supports."
        REFERENCE
            "Subclause 11.7.12.5"
        ::= { wmanIf2mBsSsReqCapabilitiesEntry 1 }

wmanIf2mBsSsReqCapHoProcessTimer OBJECT-TYPE
        SYNTAX      Unsigned32
        UNITS       "frames"
        MAX-ACCESS  read-only
        STATUS      current
        DESCRIPTION
            "The duration in frames the MS shall wait until receipt of
             the next unsolicited network re-entry MAC management
             message as indicated in the HO Process Optimization
             element of the RNG-RSP message."
        REFERENCE
            "Subclause 11.7.12.2"
```

```
        ::= { wmanIf2mBsSsReqCapabilitiesEntry 2 }

wmanIf2mBsSsReqCapMobilityFeature OBJECT-TYPE
        SYNTAX      WmanIf2mOfdmaMobility
        MAX-ACCESS  read-only
        STATUS      current
        DESCRIPTION
            "The field indicates whether or not the MS supports
             mobility hand-over, Sleep-mode, and Idle-mode."
        REFERENCE
            "Subclause 11.7.13.1"
        ::= { wmanIf2mBsSsReqCapabilitiesEntry 3 }

wmanIf2mBsSsReqCapSleepRecoveryTime OBJECT-TYPE
        SYNTAX      Unsigned32
        UNITS       "frames"
        MAX-ACCESS  read-only
        STATUS      current
        DESCRIPTION
            "The object indicates the time required for an MS that is
             in a sleep mode to return to awake-mode. This may be used
             by the BS to determine sleep interval window sizes when
             initiating sleep mode with an MS."
        REFERENCE
            "Subclause 11.7.14"
        ::= { wmanIf2mBsSsReqCapabilitiesEntry 4 }

wmanIf2mBsSsReqCapPreviousIpAddr OBJECT-TYPE
        SYNTAX      OCTET STRING
        MAX-ACCESS  read-only
        STATUS      current
        DESCRIPTION
            "The object indicates the IP address that the MS was
             assigned on the secondary management connection based on an
             association with its last serving BS. An IPv4 address shall
             be specified in conventional dotted format; e.g.,
             '134.234.2.3'. An IPv6 address may be expressed in abridged
             or unabridged form; however, the form chosen shall be
             consistent with RFC4291."
        REFERENCE
            "Subclause 11.7.15"
        ::= { wmanIf2mBsSsReqCapabilitiesEntry 5 }

wmanIf2mBsSsReqCapIdleModeTimeout OBJECT-TYPE
        SYNTAX      Unsigned32
        UNITS       "seconds"
        MAX-ACCESS  read-only
        STATUS      current
        DESCRIPTION
            "Max time interval between MS Idle Mode Location Updates."
        REFERENCE
            "Subclause 11.7.19.1"
        ::= { wmanIf2mBsSsReqCapabilitiesEntry 6 }
```



```
wmanIf2mBsSsReqCapHoConnProcessTime OBJECT-TYPE
        SYNTAX      Unsigned32
        UNITS       "milliseconds"
        MAX-ACCESS  read-only
        STATUS      current
        DESCRIPTION
            "The duration that the MS needs to process information on
             connections provided in RNG-RSP or REG-RSP message during
             Handoff."
        REFERENCE
            "Subclause 11.7.12.4"
        ::= { wmanIf2mBsSsReqCapabilitiesEntry 7 }

wmanIf2mBsSsReqCapHoTekProcessTime OBJECT-TYPE
        SYNTAX      Unsigned32
        UNITS       "milliseconds"
        MAX-ACCESS  read-only
        STATUS      current
        DESCRIPTION
            "The duration that the MS needs to completely process TEK
             information during Handoff."
        REFERENCE
            "Subclause 11.7.12.4"
        ::= { wmanIf2mBsSsReqCapabilitiesEntry 8 }

wmanIf2mBsSsReqCapPowerSavingType OBJECT-TYPE
        SYNTAX      WmanIf2mPowerSaveType
        MAX-ACCESS  read-only
        STATUS      current
        DESCRIPTION
            "For MS supporting sleep mode, this parameter defines the
             capability of the MS supporting different power save class
             types in sleep mode."
        REFERENCE
            "Subclause 11.7.13.2"
        ::= { wmanIf2mBsSsReqCapabilitiesEntry 9 }

wmanIf2mBsSsReqCapNumOfPsClass OBJECT-TYPE
        SYNTAX      Integer32 (0 .. 31)
        MAX-ACCESS  read-only
        STATUS      current
        DESCRIPTION
            "Total number of all types of power save class instances
             supported."
        REFERENCE
            "Subclause 11.7.13.2"
        ::= { wmanIf2mBsSsReqCapabilitiesEntry 10 }

wmanIf2mBsSsReqCapHoTrigMetric OBJECT-TYPE
        SYNTAX      WmanIf2mHoTrigMetric
        MAX-ACCESS  read-only
        STATUS      current
        DESCRIPTION
            "Indicates trigger metrics that MS or BS supports."
```

```
        REFERENCE
            "Subclause 11.8.6"
        ::= { wmanIf2mBsSsReqCapabilitiesEntry 11 }

wmanIf2mBsSsReqCapAssociationType OBJECT-TYPE
        SYNTAX      WmanIf2mAssociationTyp
        MAX-ACCESS  read-only
        STATUS      current
        DESCRIPTION
            "Indicates the association level supported by the MS or the
             BS."
        REFERENCE
            "Subclause 11.8.7"
        ::= { wmanIf2mBsSsReqCapabilitiesEntry 12 }

wmanIf2mBsSsRspCapabilitiesTable OBJECT-TYPE
        SYNTAX      SEQUENCE OF WmanIf2mBsSsRspCapabilitiesEntry
        MAX-ACCESS  not-accessible
        STATUS      current
        DESCRIPTION
            "This table contains the SS's capabilities that are necessary
             for supporting mobility. BS acknowledges the capabilities in
             the REG-RSP message in response to REG-REQ messages."
        REFERENCE
            "Subclause 6.3.2.3.7"
        ::= { wmanIf2mBsConfiguration 3 }

wmanIf2mBsSsRspCapabilitiesEntry OBJECT-TYPE
        SYNTAX      WmanIf2mBsSsRspCapabilitiesEntry
        MAX-ACCESS  not-accessible
        STATUS      current
        DESCRIPTION
            "This table provides one row for each SS that has entered and
             registered into the BS. The primary index is the ifIndex
             with an ifType of ieee80216WMAN, indicating the BS sector
             with which the SS is associated. wmanIf2mBsSsMacAddress
             identifies the SS being registered."
        INDEX     { ifIndex, wmanIf2mBsSsMacAddress }
        ::= { wmanIf2mBsSsRspCapabilitiesTable 1 }

WmanIf2mBsSsRspCapabilitiesEntry ::= SEQUENCE {
        wmanIf2mBsSsRspCapHandoverSupported     WmanIf2mHandoverType,
        wmanIf2mBsSsRspCapRetrainTime           Unsigned32,
        wmanIf2mBsSsRspCapHoProcessTimer        Unsigned32,
        wmanIf2mBsSsRspCapRetransmissionTimer   Unsigned32,
        wmanIf2mBsSsRspCapMobilityFeature       WmanIf2mOfdmaMobility,
        wmanIf2mBsSsRspCapIdleModeTimeout       Unsigned32,
        wmanIf2mBsSsRspCapHoConnProcessTime     Unsigned32,
        wmanIf2mBsSsRspCapHoTekProcessTime      Unsigned32,
        wmanIf2mBsSsRspCapPowerSavingType       WmanIf2mPowerSaveType,
        wmanIf2mBsSsRspCapNumOfPsClass          Integer32,
        wmanIf2mBsSsRspCapHoTrigMetric          WmanIf2mHoTrigMetric,
        wmanIf2mBsSsRspCapAssociationType       WmanIf2mAssociationTyp}
```



```
wmanIf2mBsSsRspCapHandoverSupported OBJECT-TYPE
        SYNTAX      WmanIf2mHandoverType
        MAX-ACCESS  read-only
        STATUS      current
        DESCRIPTION
           "Indicates what type(s) of Handover the BS or MS supports."
        REFERENCE
            "Subclause 11.7.12.5"
        ::= { wmanIf2mBsSsRspCapabilitiesEntry 1 }

wmanIf2mBsSsRspCapRetrainTime OBJECT-TYPE
        SYNTAX      Unsigned32 (0 .. 65535)
        UNITS       "100 milliseconds"
        MAX-ACCESS  read-only
        STATUS      current
        DESCRIPTION
           "Indicates the duration for MS's connection information that
            will be retained in serving BS. BS shall start
            Resource_Retain_Time timer at MS notification of pending HO
            attempt through MOB_HO-IND or by detecting an MS drop."
        REFERENCE
            "Subclause 11.14.1"
        ::= { wmanIf2mBsSsRspCapabilitiesEntry 2 }

wmanIf2mBsSsRspCapHoProcessTimer OBJECT-TYPE
        SYNTAX      Unsigned32
        UNITS       "frames"
        MAX-ACCESS  read-only
        STATUS      current
        DESCRIPTION
            "The duration in frames the MS shall wait until receipt of
             the next unsolicited network re-entry MAC management
             message as indicated in the HO Process Optimization element
             of the RNG-RSP message. On HO Process Optimization MS Timer
             timeout and while HO Process Optimization MS Timer Retries
             is valid, MS shall send the network re-entry MAC management
             request message corresponding to the expected and pending
             network re-entry MAC management response message as
             indicated in HO Process Optimization and recycle HO Process
             Optimization MS Timer."
        REFERENCE
            "Subclause 11.7.12.2"
        ::= { wmanIf2mBsSsRspCapabilitiesEntry 3 }

wmanIf2mBsSsRspCapRetransmissionTimer OBJECT-TYPE
        SYNTAX      Unsigned32 (0 .. 255)
        UNITS       "frames"
        MAX-ACCESS  read-only
        STATUS      current
        DESCRIPTION
            "When an MS transmits MOB_MSHO-REQ to initiate a handover
             process, it shall start MS Handover Retransmission Timer
             and shall not transmit another MOB_MSHO-REQ until the
             expiration of the MS Handover Retransmission Timer."
```

```
        REFERENCE
            "Subclause 11.7.12.3"
        ::= { wmanIf2mBsSsRspCapabilitiesEntry 4 }

wmanIf2mBsSsRspCapMobilityFeature OBJECT-TYPE
        SYNTAX      WmanIf2mOfdmaMobility
        MAX-ACCESS  read-only
        STATUS      current
        DESCRIPTION
            "The field indicates the mobility hand-over, Sleep-mode, and
             Idle-mode negotiated for MS."
        REFERENCE
            "Subclause 11.7.13.1"
        ::= { wmanIf2mBsSsRspCapabilitiesEntry 5 }

wmanIf2mBsSsRspCapIdleModeTimeout OBJECT-TYPE
        SYNTAX      Unsigned32
        UNITS       "seconds"
        MAX-ACCESS  read-only
        STATUS      current
        DESCRIPTION
            "Max time interval between MS Idle Mode Location Updates."
        REFERENCE
            "Subclause 11.7.19.1"
        ::= { wmanIf2mBsSsRspCapabilitiesEntry 6 }

wmanIf2mBsSsRspCapHoConnProcessTime OBJECT-TYPE
        SYNTAX      Unsigned32
        UNITS       "milliseconds"
        MAX-ACCESS  read-only
        STATUS      current
        DESCRIPTION
            "The duration that the MS needs to process information on
             connections provided in RNG-RSP or REG-RSP message during
             Handoff."
        REFERENCE
            "Subclause 11.7.12.4"
        ::= { wmanIf2mBsSsRspCapabilitiesEntry 7 }

wmanIf2mBsSsRspCapHoTekProcessTime OBJECT-TYPE
        SYNTAX      Unsigned32
        UNITS       "milliseconds"
        MAX-ACCESS  read-only
        STATUS      current
        DESCRIPTION
            "The duration that the MS needs to completely process TEK
             information during Handoff."
        REFERENCE
            "Subclause 11.7.12.4"
        ::= { wmanIf2mBsSsRspCapabilitiesEntry 8 }

wmanIf2mBsSsRspCapPowerSavingType OBJECT-TYPE
        SYNTAX      WmanIf2mPowerSaveType
        MAX-ACCESS  read-only
```



```
        STATUS      current
        DESCRIPTION
            "For MS supporting sleep mode, this parameter defines the
             capability of the MS supporting different power save class
             types in sleep mode."
        REFERENCE
            "Subclause 11.7.13.2"
        ::= { wmanIf2mBsSsRspCapabilitiesEntry 9 }

wmanIf2mBsSsRspCapNumOfPsClass OBJECT-TYPE
        SYNTAX      Integer32 (0 .. 31)
        MAX-ACCESS  read-only
        STATUS      current
        DESCRIPTION
            "Total number of all types of power save class instances
             supported."
        REFERENCE
            "Subclause 11.7.13.2"
        ::= { wmanIf2mBsSsRspCapabilitiesEntry 10 }

wmanIf2mBsSsRspCapHoTrigMetric OBJECT-TYPE
        SYNTAX      WmanIf2mHoTrigMetric
        MAX-ACCESS  read-only
        STATUS      current
        DESCRIPTION
            "Indicates trigger metrics that MS or BS supports."
        REFERENCE
            "Subclause 11.8.5"
        ::= { wmanIf2mBsSsRspCapabilitiesEntry 11 }

wmanIf2mBsSsRspCapAssociationType OBJECT-TYPE
        SYNTAX      WmanIf2mAssociationTyp
        MAX-ACCESS  read-only
        STATUS      current
        DESCRIPTION
            "Indicates the association level supported by the MS or the
             BS."
        REFERENCE
            "Subclause 11.8.6"
        ::= { wmanIf2mBsSsRspCapabilitiesEntry 12 }

wmanIf2mBsBasicCapabilitiesTable OBJECT-TYPE
        SYNTAX      SEQUENCE OF WmanIf2mBsBasicCapabilitiesEntry
        MAX-ACCESS  not-accessible
        STATUS      current
        DESCRIPTION
            "This table contains the basic capabilities of the BS as
             implemented in BS hardware and software. These capabilities
             along with the configuration for them
            (wmanIf2mBsCapabilitiesConfigTable) are used for negotiation
             of basic capabilities with SS using RNG-RSP, SBC-RSP and
             REG-RSP messages. The negotiated capabilities are obtained
             by interSubclause of SS raw reported capabilities, BS raw
             capabilities and BS configured capabilities. The objects in
```

```
             the table have read-only access. The table is maintained
             by BS."
        ::= { wmanIf2mBsConfiguration 4 }

wmanIf2mBsBasicCapabilitiesEntry OBJECT-TYPE
        SYNTAX      WmanIf2mBsBasicCapabilitiesEntry
        MAX-ACCESS  not-accessible
        STATUS      current
        DESCRIPTION
            "This table provides one row for each BS sector."
        INDEX     { ifIndex }
        ::= { wmanIf2mBsBasicCapabilitiesTable 1 }

WmanIf2mBsBasicCapabilitiesEntry ::= SEQUENCE {
        wmanIf2mBsCapHandoverSupported          WmanIf2mHandoverType,
        wmanIf2mBsCapRetrainTime                Unsigned32,
        wmanIf2mBsCapHoProcessTimer             Unsigned32,
        wmanIf2mBsCapRetransmissionTimer        Unsigned32,
        wmanIf2mBsCapMobilityFeature            WmanIf2mOfdmaMobility,
        wmanIf2mBsCapIdleModeTimeout            Unsigned32,
        wmanIf2mBsCapHoConnProcessTime          Unsigned32,
        wmanIf2mBsCapHoTekProcessTime           Unsigned32,
        wmanIf2mBsCapPowerSavingType            WmanIf2mPowerSaveType,
        wmanIf2mBsCapNumOfPsClass               Integer32,
        wmanIf2mBsCapHoTrigMetric               WmanIf2mHoTrigMetric,
        wmanIf2mBsCapAssociationType            WmanIf2mAssociationTyp}

wmanIf2mBsCapHandoverSupported OBJECT-TYPE
        SYNTAX      WmanIf2mHandoverType
        MAX-ACCESS  read-only
        STATUS      current
        DESCRIPTION
            "Indicates what type(s) of Handover the BS or MS supports."
        REFERENCE
            "Subclause 11.7.12.5"
        ::= { wmanIf2mBsBasicCapabilitiesEntry 1 }

wmanIf2mBsCapRetrainTime OBJECT-TYPE
        SYNTAX      Unsigned32 (0 .. 65535)
        UNITS       "100 milliseconds"
        MAX-ACCESS  read-only
        STATUS      current
        DESCRIPTION
           "Indicates the duration for MS's connection information that
            will be retained in serving BS. BS shall start
            Resource_Retain_Time timer at MS notification of pending HO
            attempt through MOB_HO-IND or by detecting an MS drop."
        REFERENCE
            "Subclause 11.15.1"
        ::= { wmanIf2mBsBasicCapabilitiesEntry 2 }

wmanIf2mBsCapHoProcessTimer OBJECT-TYPE
        SYNTAX      Unsigned32
        UNITS       "frames"
```



```
        MAX-ACCESS  read-only
        STATUS      current
        DESCRIPTION
            "The duration in frames the MS shall wait until receipt of
             the next unsolicited network re-entry MAC management
             message as indicated in the HO Process Optimization element
             of the RNG-RSP message."
        REFERENCE
            "Subclause 11.7.12.2"
        ::= { wmanIf2mBsBasicCapabilitiesEntry 3 }

wmanIf2mBsCapRetransmissionTimer OBJECT-TYPE
        SYNTAX      Unsigned32 (0 .. 255)
        UNITS       "frames"
        MAX-ACCESS  read-only
        STATUS      current
        DESCRIPTION
            "When an MS transmits MOB_MSHO-REQ to initiate a handover
             process, it shall start MS Handover Retransmission Timer
             and shall not transmit another MOB_MSHO-REQ until the
             expiration of the MS Handover Retransmission Timer."
        REFERENCE
            "Subclause 11.7.13.3"
        ::= { wmanIf2mBsBasicCapabilitiesEntry 4 }

wmanIf2mBsCapMobilityFeature OBJECT-TYPE
        SYNTAX      WmanIf2mOfdmaMobility
        MAX-ACCESS  read-only
        STATUS      current
        DESCRIPTION
            "The field indicates the mobility hand-over, Sleep-mode, and
             Idle-mode supported by BS."
        REFERENCE
            "Subclause 11.7.13.1"
        ::= { wmanIf2mBsBasicCapabilitiesEntry 5 }

wmanIf2mBsCapIdleModeTimeout OBJECT-TYPE
        SYNTAX      Unsigned32
        UNITS       "seconds"
        MAX-ACCESS  read-only
        STATUS      current
        DESCRIPTION
            "Max time interval between MS Idle Mode Location Updates."
        REFERENCE
            "Subclause 11.7.19.1"
        ::= { wmanIf2mBsBasicCapabilitiesEntry 6 }

wmanIf2mBsCapHoConnProcessTime OBJECT-TYPE
        SYNTAX      Unsigned32
        UNITS       "milliseconds"
        MAX-ACCESS  read-only
        STATUS      current
        DESCRIPTION
            "The duration that the MS needs to process information on
```

```
             connections provided in RNG-RSP or REG-RSP message during
             Handoff."
        REFERENCE
            "Subclause 11.7.12.4"
        ::= { wmanIf2mBsBasicCapabilitiesEntry 7 }

wmanIf2mBsCapHoTekProcessTime OBJECT-TYPE
        SYNTAX      Unsigned32
        UNITS       "milliseconds"
        MAX-ACCESS  read-only
        STATUS      current
        DESCRIPTION
            "The duration that the MS needs to completely process TEK
             information during Handoff."
        REFERENCE
            "Subclause 11.7.12.4"
        ::= { wmanIf2mBsBasicCapabilitiesEntry 8 }

wmanIf2mBsCapPowerSavingType OBJECT-TYPE
        SYNTAX      WmanIf2mPowerSaveType
        MAX-ACCESS  read-only
        STATUS      current
        DESCRIPTION
            "For MS supporting sleep mode, this parameter defines the
             capability of the MS supporting different power save class
             types in sleep mode."
        REFERENCE
            "Subclause 11.7.13.2"
        ::= { wmanIf2mBsBasicCapabilitiesEntry 9 }

wmanIf2mBsCapNumOfPsClass OBJECT-TYPE
        SYNTAX      Integer32 (0 .. 31)
        MAX-ACCESS  read-only
        STATUS      current
        DESCRIPTION
            "Total number of all types of power save class instances
             supported."
        REFERENCE
            "Subclause 11.7.13.2"
        ::= { wmanIf2mBsBasicCapabilitiesEntry 10 }

wmanIf2mBsCapHoTrigMetric OBJECT-TYPE
        SYNTAX      WmanIf2mHoTrigMetric
        MAX-ACCESS  read-only
        STATUS      current
        DESCRIPTION
            "Indicates trigger metrics that MS or BS supports."
        REFERENCE
            "Subclause 11.8.6"
        ::= { wmanIf2mBsBasicCapabilitiesEntry 11 }

wmanIf2mBsCapAssociationType OBJECT-TYPE
        SYNTAX      WmanIf2mAssociationTyp
        MAX-ACCESS  read-only
```



```
        STATUS      current
        DESCRIPTION
            "Indicates the association level supported by the MS or the
             BS."
        REFERENCE
            "Subclause 11.8.7"
        ::= { wmanIf2mBsBasicCapabilitiesEntry 12 }

wmanIf2mBsCapabilitiesConfigTable OBJECT-TYPE
        SYNTAX      SEQUENCE OF WmanIf2mBsCapabilitiesConfigEntry
        MAX-ACCESS  not-accessible
        STATUS      current
        DESCRIPTION
            "This table contains the configuration for basic capabilities
             of BS. The table is intended to be used to restrict the
             Capabilities implemented by BS, for example in order to
             comply with local regulatory requirements. The BS should use
             the configuration along with the implemented Capabilities
             (wmanIf2mBsBasicCapabilitiesTable) for negotiation of basic
             capabilities with SS using RNG-RSP, SBC-RSP and REG-RSP
             messages. The negotiated capabilities are obtained by
             interSubclause of SS reported capabilities, BS raw
             capabilities and BS configured capabilities. The objects in
             the table have read-write access. The rows are created by
             BS as a copy of wmanIf2mBsBasicCapabilitiesTable and can be
             modified by NMS."
        ::= { wmanIf2mBsConfiguration 5 }

wmanIf2mBsCapabilitiesConfigEntry OBJECT-TYPE
        SYNTAX      WmanIf2mBsCapabilitiesConfigEntry
        MAX-ACCESS  not-accessible
        STATUS      current
        DESCRIPTION
            "This table provides one row for each BS sector."
        INDEX     { ifIndex }
        ::= { wmanIf2mBsCapabilitiesConfigTable 1 }

WmanIf2mBsCapabilitiesConfigEntry ::= SEQUENCE {
        wmanIf2mBsCapCfgHandoverSupported       WmanIf2mHandoverType,
        wmanIf2mBsCapCfgRetrainTime             Unsigned32,
        wmanIf2mBsCapCfgHoProcessTimer          Unsigned32,
        wmanIf2mBsCapCfgRetransmissionTimer     Unsigned32,
        wmanIf2mBsCapCfgMobilityFeature         WmanIf2mOfdmaMobility,
        wmanIf2mBsCapCfgIdleModeTimeout         Unsigned32,
        wmanIf2mBsCapCfgHoConnProcessTime       Unsigned32,
        wmanIf2mBsCapCfgHoTekProcessTime        Unsigned32,
        wmanIf2mBsCapCfgPowerSavingType         WmanIf2mPowerSaveType,
        wmanIf2mBsCapCfgNumOfPsClass            Integer32,
        wmanIf2mBsCapCfgHoTrigMetric            WmanIf2mHoTrigMetric,
        wmanIf2mBsCapCfgAssociationType         WmanIf2mAssociationTyp}

wmanIf2mBsCapCfgHandoverSupported OBJECT-TYPE
        SYNTAX      WmanIf2mHandoverType
        MAX-ACCESS  read-write
```

```
        STATUS      current
        DESCRIPTION
            "Indicates what type(s) of Handover the BS or MS supports."
        REFERENCE
            "Subclause 11.7.12.5"
        ::= { wmanIf2mBsCapabilitiesConfigEntry 1 }

wmanIf2mBsCapCfgRetrainTime OBJECT-TYPE
        SYNTAX      Unsigned32 (0 .. 65535)
        UNITS       "100 milliseconds"
        MAX-ACCESS  read-write
        STATUS      current
        DESCRIPTION
           "Indicates the duration for MS's connection information that
            will be retained in serving BS. BS shall start
            Resource_Retain_Time timer at MS notification of pending HO
            attempt through MOB_HO-IND or by detecting an MS drop."
        REFERENCE
            "Subclause 11.15.1"
        DEFVAL    { 1 }
        ::= { wmanIf2mBsCapabilitiesConfigEntry 2 }

wmanIf2mBsCapCfgHoProcessTimer OBJECT-TYPE
        SYNTAX      Unsigned32
        UNITS       "frames"
        MAX-ACCESS  read-write
        STATUS      current
        DESCRIPTION
            "The duration in frames the MS shall wait until receipt of
             the next unsolicited network re-entry MAC management
             message as indicated in the HO Process Optimization element
             of the RNG-RSP message."
        REFERENCE
            "Subclause 11.7.12.2"
        ::= { wmanIf2mBsCapabilitiesConfigEntry 3 }

wmanIf2mBsCapCfgRetransmissionTimer OBJECT-TYPE
        SYNTAX      Unsigned32 (0 .. 255)
        UNITS       "frames"
        MAX-ACCESS  read-write
        STATUS      current
        DESCRIPTION
            "When an MS transmits MOB_MSHO-REQ to initiate a handover
             process, it shall start MS Handover Retransmission Timer
             and shall not transmit another MOB_MSHO-REQ until the
             expiration of the MS Handover Retransmission Timer."
        REFERENCE
            "Subclause 11.7.12.3"
        ::= { wmanIf2mBsCapabilitiesConfigEntry 4 }

wmanIf2mBsCapCfgMobilityFeature OBJECT-TYPE
        SYNTAX      WmanIf2mOfdmaMobility
        MAX-ACCESS  read-write
        STATUS      current
```



```
        DESCRIPTION
            "The field indicates the mobility hand-over, Sleep-mode, and
             Idle-mode configured for the BS."
        REFERENCE
            "Subclause 11.7.13.1"
        ::= { wmanIf2mBsCapabilitiesConfigEntry 5 }

wmanIf2mBsCapCfgIdleModeTimeout OBJECT-TYPE
        SYNTAX      Unsigned32
        UNITS       "seconds"
        MAX-ACCESS  read-write
        STATUS      current
        DESCRIPTION
            "Max time interval between MS Idle Mode Location Updates."
        REFERENCE
            "Subclause 11.7.19.1"
        DEFVAL         { 4096 }
        ::= { wmanIf2mBsCapabilitiesConfigEntry 6 }

wmanIf2mBsCapCfgHoConnProcessTime OBJECT-TYPE
        SYNTAX      Unsigned32
        UNITS       "milliseconds"
        MAX-ACCESS  read-write
        STATUS      current
        DESCRIPTION
            "The duration that the MS needs to process information on
             connections provided in RNG-RSP or REG-RSP message during
             Handoff."
        REFERENCE
            "Subclause 11.7.12.4"
        ::= { wmanIf2mBsCapabilitiesConfigEntry 7 }

wmanIf2mBsCapCfgHoTekProcessTime OBJECT-TYPE
        SYNTAX      Unsigned32
        UNITS       "milliseconds"
        MAX-ACCESS  read-write
        STATUS      current
        DESCRIPTION
            "The duration that the MS needs to completely process TEK
             information during Handoff."
        REFERENCE
            "Subclause 11.7.12.4"
        ::= { wmanIf2mBsCapabilitiesConfigEntry 8 }

wmanIf2mBsCapCfgPowerSavingType OBJECT-TYPE
        SYNTAX      WmanIf2mPowerSaveType
        MAX-ACCESS  read-only
        STATUS      current
        DESCRIPTION
            "For MS supporting sleep mode, this parameter defines the
             capability of the MS supporting different power save class
             types in sleep mode."
        REFERENCE
            "Subclause 11.7.13.2"
```

```
        ::= { wmanIf2mBsCapabilitiesConfigEntry 9 }

wmanIf2mBsCapCfgNumOfPsClass OBJECT-TYPE
        SYNTAX      Integer32 (0 .. 31)
        MAX-ACCESS  read-only
        STATUS      current
        DESCRIPTION
            "Total number of all types of power save class instances
             supported."
        REFERENCE
            "Subclause 11.7.13.2"
        ::= { wmanIf2mBsCapabilitiesConfigEntry 10 }

wmanIf2mBsCapCfgHoTrigMetric OBJECT-TYPE
        SYNTAX      WmanIf2mHoTrigMetric
        MAX-ACCESS  read-only
        STATUS      current
        DESCRIPTION
            "Indicates trigger metrics that MS or BS supports."
        REFERENCE
            "Subclause 11.8.6"
        ::= { wmanIf2mBsCapabilitiesConfigEntry 11 }

wmanIf2mBsCapCfgAssociationType OBJECT-TYPE
        SYNTAX      WmanIf2mAssociationTyp
        MAX-ACCESS  read-only
        STATUS      current
        DESCRIPTION
            "Indicates the association level supported by the MS or the
             BS."
        REFERENCE
            "Subclause 11.8.7"
        ::= { wmanIf2mBsCapabilitiesConfigEntry 12 }

wmanIf2mBsSsCidUpdateTable OBJECT-TYPE
        SYNTAX      SEQUENCE OF WmanIf2mBsSsCidUpdateEntry
        MAX-ACCESS  not-accessible
        STATUS      current
        DESCRIPTION
            "This table contains the 'CID update' TLV that is send in
             the REG-RSP message to allow an MS to update its service
             flows and connection information so that it may continue
             service after a handover to a new serving BS.

             The wmanIf2mBsCid and wmanIf2mBsSfTargetSaid objects in
             wmanIf2mBsServiceFlowTable in wmanIf2mMib shall be updated
             with the CIDs and SAIDs included in the 'CID update' TLV.
             If the service flow parameters changes are included in the
             'Connection Info' TLV, the service flow information can be
             found in wmanIf2mBsServiceFlowTable."
        REFERENCE
            "Subclause 11.7.9"
        ::= { wmanIf2mBsConfiguration 6 }
```



```
wmanIf2mBsSsCidUpdateEntry OBJECT-TYPE
        SYNTAX      WmanIf2mBsSsCidUpdateEntry
        MAX-ACCESS  not-accessible
        STATUS      current
        DESCRIPTION
            "This table provides one row for each service flow."
        INDEX     { ifIndex,
                    wmanIf2mBsSsMacAddress,
                    wmanIf2mBsSsSfId }
        ::= { wmanIf2mBsSsCidUpdateTable 1 }

WmanIf2mBsSsCidUpdateEntry ::= SEQUENCE {
        wmanIf2mBsSsSfId                        Unsigned32,
        wmanIf2mBsSsNewCid                      WmanIf2TcCidType,
        wmanIf2mBsSsNewSaid                     Integer32,
        wmanIf2mBsSsOldSaid                     Integer32}

wmanIf2mBsSsSfId OBJECT-TYPE
        SYNTAX      Unsigned32 (1 .. 4294967295)
        MAX-ACCESS  not-accessible
        STATUS      current
        DESCRIPTION
            "A 32 bit quantity that uniquely identifies a service flow."
        ::= { wmanIf2mBsSsCidUpdateEntry 1 }

wmanIf2mBsSsNewCid OBJECT-TYPE
        SYNTAX      WmanIf2TcCidType
        MAX-ACCESS  read-only
        STATUS      current
        DESCRIPTION
            "The new CID at the target BS for a service flow that was
             used by MS in the previous serving BS."
        REFERENCE
            "Subclause 11.7.9"
        ::= { wmanIf2mBsSsCidUpdateEntry 2 }

wmanIf2mBsSsNewSaid OBJECT-TYPE
        SYNTAX      Integer32 (0 .. 65535)
        MAX-ACCESS  read-only
        STATUS      current
        DESCRIPTION
            "The field indicates New SAID after handover to new BS. It
             provides a translation table that allows an MS to update
             its security associations so that it may continue security
             service after a handover to a new serving BS."
        REFERENCE
            "Subclause 11.7.17"
        ::= { wmanIf2mBsSsCidUpdateEntry 3 }

wmanIf2mBsSsOldSaid OBJECT-TYPE
        SYNTAX      Integer32 (0 .. 65535)
        MAX-ACCESS  read-only
        STATUS      current
        DESCRIPTION
```

```
            "The field indicates Old SAID after handover to new BS. It
             provides a translation table that allows an MS to update
             its security associations so that it may continue security
             service after a handover to a new serving BS."
        REFERENCE
            "Subclause 11.7.17"
        ::= { wmanIf2mBsSsCidUpdateEntry 4 }

--
-- wmanIf2mBsNetworkServiceProviderTable
--
wmanIf2mBsNetworkServiceProviderTable OBJECT-TYPE
        SYNTAX      SEQUENCE OF WmanIf2mBsNetworkServiceProviderEntry
        MAX-ACCESS  not-accessible
        STATUS      current
        DESCRIPTION
            "This table contains the list of NetworkService Provider to
             be sent by SBC-RSP or broadcast by SII-ADV message."
        REFERENCE
            "Subclause 11.1.10"
        ::= { wmanIf2mBsConfiguration 7 }

wmanIf2mBsNetworkServiceProviderEntry OBJECT-TYPE
        SYNTAX      WmanIf2mBsNetworkServiceProviderEntry
        MAX-ACCESS  not-accessible
        STATUS      current
        DESCRIPTION
            ""
        INDEX     { ifIndex, wmanIf2mBsNspListIndex }
        ::= { wmanIf2mBsNetworkServiceProviderTable 1 }

WmanIf2mBsNetworkServiceProviderEntry ::= SEQUENCE {
        wmanIf2mBsNspListIndex                  Integer32,
        wmanIf2mBsNspIdentifier                 WmanIf2mNspId,
        wmanIf2mBsVerboseNspNameLength          Integer32,
        wmanIf2mBsVerboseNspName                OCTET STRING,
        wmanIf2mBsNspRowStatus                  RowStatus}

wmanIf2mBsNspListIndex OBJECT-TYPE
        SYNTAX      Integer32 (0 .. 65535)
        MAX-ACCESS  not-accessible
        STATUS      current
        DESCRIPTION
            "Index to NSP list."
        ::= { wmanIf2mBsNetworkServiceProviderEntry 1 }

wmanIf2mBsNspIdentifier OBJECT-TYPE
        SYNTAX      WmanIf2mNspId
        MAX-ACCESS  read-create
        STATUS      current
        DESCRIPTION
            "Network Service Provider identifier."
        ::= { wmanIf2mBsNetworkServiceProviderEntry 2 }
```



```
wmanIf2mBsVerboseNspNameLength OBJECT-TYPE
        SYNTAX      Integer32 (0 .. 255)
        MAX-ACCESS  read-create
        STATUS      current
        DESCRIPTION
            "Length of the Verbose NSP Name."
        ::= { wmanIf2mBsNetworkServiceProviderEntry 3 }

wmanIf2mBsVerboseNspName OBJECT-TYPE
        SYNTAX      OCTET STRING (SIZE (255))
        MAX-ACCESS  read-create
        STATUS      current
        DESCRIPTION
            "The verbose name of the NSP."
        ::= { wmanIf2mBsNetworkServiceProviderEntry 4 }

wmanIf2mBsNspRowStatus OBJECT-TYPE
        SYNTAX          RowStatus
        MAX-ACCESS      read-create
        STATUS          current
        DESCRIPTION
            "This object is used to ensure that the write, create,
             delete operation to multiple columns is guaranteed to be
             treated as atomic operation by agent."
        ::= { wmanIf2mBsNetworkServiceProviderEntry 5 }

--
-- Base Station Power Saving Mode
--
wmanIf2mBsPowerSavingMode OBJECT IDENTIFIER ::= { wmanIf2mBsCm 2 }

--
-- wmanIf2mBsSsPwrSaving2CidMapTable contains the power saving status
--
wmanIf2mBsSsPwrSaving2CidMapTable OBJECT-TYPE
        SYNTAX      SEQUENCE OF WmanIf2mBsSsPwrSaving2CidMapEntry
        MAX-ACCESS  not-accessible
        STATUS      current
        DESCRIPTION
            "This table contains the list of CIDs for each power saving
             class of every MS supporting sleep mode. When the MS roams
             to a different BS, all entries associated with such MS will
             be deleted."
        ::= { wmanIf2mBsPowerSavingMode 1 }

wmanIf2mBsSsPwrSaving2CidMapEntry OBJECT-TYPE
        SYNTAX      WmanIf2mBsSsPwrSaving2CidMapEntry
        MAX-ACCESS  not-accessible
        STATUS      current
        DESCRIPTION
            "This table provides one row for each CID in an MS."
        INDEX     { ifIndex,
                    wmanIf2mBsSsMacAddress,
                    wmanIf2mBsSsCid  }
```

```
        ::= { wmanIf2mBsSsPwrSaving2CidMapTable 1 }

WmanIf2mBsSsPwrSaving2CidMapEntry::= SEQUENCE {
        wmanIf2mBsSsCid                         WmanIf2TcCidType,
        wmanIf2mBsSsPowerSavingClassId          WmanIf2mPsClassId}

wmanIf2mBsSsCid OBJECT-TYPE
        SYNTAX      WmanIf2TcCidType
        MAX-ACCESS  not-accessible
        STATUS      current
        DESCRIPTION
            "A 16 bit channel identifier to identify a connection."
        ::= { wmanIf2mBsSsPwrSaving2CidMapEntry 1 }

wmanIf2mBsSsPowerSavingClassId OBJECT-TYPE
        SYNTAX      WmanIf2mPsClassId
        MAX-ACCESS  read-only
        STATUS      current
        DESCRIPTION
            "wmanIf2mBsSsPowerSavingClassId identifies the power saving
             class associated with this CID. It maps to an entry in
             wmanIf2mBsSsPowerSavingClassesTable."
        ::= { wmanIf2mBsSsPwrSaving2CidMapEntry 2 }

--
-- wmanIf2mBsSsPowerSavingClassesTable contains the power saving classes
-- information
--
wmanIf2mBsSsPowerSavingClassesTable OBJECT-TYPE
        SYNTAX      SEQUENCE OF WmanIf2mBsSsPowerSavingClassesEntry
        MAX-ACCESS  not-accessible
        STATUS      current
        DESCRIPTION
            "This table reports the parameters of all the power saving
             classes negotiated between BS and MS using MOB_SLP-REQ and
             MOB_SLP-RSP messages. When the MS roams to a different BS,
             all entries associated with such MS will be deleted."
        REFERENCE
            "Subclause 6.3.2.3.39, 6.3.2.3.40"
        ::= { wmanIf2mBsPowerSavingMode 2 }

wmanIf2mBsSsPowerSavingClassesEntry OBJECT-TYPE
        SYNTAX      WmanIf2mBsSsPowerSavingClassesEntry
        MAX-ACCESS  not-accessible
        STATUS      current
        DESCRIPTION
            "It is intended to support both unicast and multicast
             service flows. wmanIf2mBsSsMacAddress contains the MAC
             address of the MS to which the power saving classes are
             associated."
        INDEX     { ifIndex,
                    wmanIf2mBsSsMacAddress,
                    wmanIf2mBsSsPsClassId }
        ::= { wmanIf2mBsSsPowerSavingClassesTable 1 }
```



```
WmanIf2mBsSsPowerSavingClassesEntry ::= SEQUENCE {
        wmanIf2mBsSsPsClassId                   WmanIf2mPsClassId,
        wmanIf2mBsSsStartFrameNumber            Integer32,
        wmanIf2mBsSsPowerSavingClassType        WmanIf2mPsClassType,
        wmanIf2mBsSsPsClassCidDirection         WmanIf2mPsClassCidDir,
        wmanIf2mBsSsTrafficTriggeredWakening    WmanIf2mTrafficWkFlag,
        wmanIf2mBsSsInitialSleepWindow          Integer32,
        wmanIf2mBsSsFinalSleepWindowBase        Integer32,
        wmanIf2mBsSsFinalSleepWindowExponent    Integer32,
        wmanIf2mBsSsListeningWindow             Integer32,
        wmanIf2mBsSsPowerSavingMode             WmanIf2mPowerSavingMode,
        wmanIf2mBsSsSlpId                       Integer32}

wmanIf2mBsSsPsClassId OBJECT-TYPE
        SYNTAX      WmanIf2mPsClassId
        MAX-ACCESS  not-accessible
        STATUS      current
        DESCRIPTION
            "This object uniquely identifies the power saving classes in
             a MS."
        ::= { wmanIf2mBsSsPowerSavingClassesEntry 1 }

wmanIf2mBsSsStartFrameNumber OBJECT-TYPE
        SYNTAX      Integer32
        MAX-ACCESS  read-only
        STATUS      current
        DESCRIPTION
            "Start frame number for first sleep window."
        REFERENCE
            "Subclause 6.3.2.3.39"
        ::= { wmanIf2mBsSsPowerSavingClassesEntry 2 }

wmanIf2mBsSsPowerSavingClassType OBJECT-TYPE
        SYNTAX      WmanIf2mPsClassType
        MAX-ACCESS  read-only
        STATUS      current
        DESCRIPTION
            "Power saving classes type I - BE & NRT-VR,
             Power saving classes type II - UGS & RT-VR,
             Power saving classes type III - multicast, management CID"
        REFERENCE
            "Subclause 6.3.2.3.39"
        ::= { wmanIf2mBsSsPowerSavingClassesEntry 3 }

wmanIf2mBsSsPsClassCidDirection OBJECT-TYPE
        SYNTAX      WmanIf2mPsClassCidDir
        MAX-ACCESS  read-only
        STATUS      current
        DESCRIPTION
            "The direction of power saving class's CIDs."
        REFERENCE
            "Subclause 6.3.2.3.39"
        ::= { wmanIf2mBsSsPowerSavingClassesEntry 4 }
```

```
wmanIf2mBsSsTrafficTriggeredWakening OBJECT-TYPE
        SYNTAX      WmanIf2mTrafficWkFlag
        MAX-ACCESS  read-only
        STATUS      current
        DESCRIPTION
            "Traffic Triggered Wakening flag
             0 = Power Saving Class shall not be deactivated if traffic
                 appears at the connection as per 6.3.21.2.
             1 = Power Saving Class shall be deactivated if traffic
                 appears at the connection as 6.3.21.2."
        REFERENCE
            "Subclause 6.3.19.39"
        ::= { wmanIf2mBsSsPowerSavingClassesEntry 5 }

wmanIf2mBsSsInitialSleepWindow OBJECT-TYPE
        SYNTAX      Integer32 (0..255)
        UNITS       "frame"
        MAX-ACCESS  read-only
        STATUS      current
        DESCRIPTION
            "The initial duration for the sleep window. It is not
             relevant for Power Saving Class type III, and shall
             return '0'."
        REFERENCE
            "Subclause 6.3.2.3.39"
        ::= { wmanIf2mBsSsPowerSavingClassesEntry 6 }

wmanIf2mBsSsFinalSleepWindowBase OBJECT-TYPE
        SYNTAX      Integer32 (0..1023)
        UNITS       "frame"
        MAX-ACCESS  read-only
        STATUS      current
        DESCRIPTION
            "The final value for the sleep interval. It is not
             relevant for Power Saving Class type II, and shall
             return '0'. For Power Saving Class type III, it is the
             base for duration of single sleep window request."
        REFERENCE
            "Subclause 6.3.2.3.39"
        ::= { wmanIf2mBsSsPowerSavingClassesEntry 7 }

wmanIf2mBsSsFinalSleepWindowExponent OBJECT-TYPE
        SYNTAX      Integer32 (0..7)
        MAX-ACCESS  read-only
        STATUS      current
        DESCRIPTION
            "The factor by which the final-sleep window base is
             multiplied in order to calculate the final-sleep window.
             The following formula is used:
             final-sleep window = final-sleep window base x
                                  2^(final-sleep window exponent)
             For Power Saving Class type III, it is the exponent for
             the duration of single sleep window request."
```



```
        REFERENCE
            "Subclause 6.3.2.3.39"
        ::= { wmanIf2mBsSsPowerSavingClassesEntry 8 }

wmanIf2mBsSsListeningWindow OBJECT-TYPE
        SYNTAX      Integer32 (0..255)
        UNITS       "frame"
        MAX-ACCESS  read-only
        STATUS      current
        DESCRIPTION
            "The Duration of MS listening window. It is not relevant for
             Power Saving Class type III, and shall return '0'."
        REFERENCE
            "Subclause 6.3.2.3.39"
        ::= { wmanIf2mBsSsPowerSavingClassesEntry 9 }

wmanIf2mBsSsPowerSavingMode OBJECT-TYPE
        SYNTAX      WmanIf2mPowerSavingMode
        MAX-ACCESS  read-only
        STATUS      current
        DESCRIPTION
            "Indicate whether the power saving class is active or not."
        REFERENCE
            "Subclause 6.3.2.3.40"
        ::= { wmanIf2mBsSsPowerSavingClassesEntry 10 }

wmanIf2mBsSsSlpId OBJECT-TYPE
        SYNTAX      Integer32 (0..1023)
        MAX-ACCESS  read-only
        STATUS      current
        DESCRIPTION
            "wmanIf2mBsSsSlpId is assigned by the BS whenever an MS is
             instructed to enter sleep mode. This number shall be unique
             among all MSs that are in sleep mode."
        REFERENCE
            "Subclause 6.3.2.3.40"
        ::= { wmanIf2mBsSsPowerSavingClassesEntry 11 }

--
--
-- Neighbor Base Stations Advertizement
--
wmanIf2mBsNeighborAdv OBJECT IDENTIFIER ::= { wmanIf2mBsCm 3 }

wmanIf2mBsNeighborAdvCommonTable OBJECT-TYPE
        SYNTAX      SEQUENCE OF WmanIf2mBsNeighborAdvCommonEntry
        MAX-ACCESS  not-accessible
        STATUS      current
        DESCRIPTION
            "This table contains the common attributes for the
             MOB_NBR-ADV message."
        REFERENCE
            "Subclause 6.3.2.3.42"
        ::= { wmanIf2mBsNeighborAdv 1 }
```

```
wmanIf2mBsNeighborAdvCommonEntry OBJECT-TYPE
        SYNTAX      WmanIf2mBsNeighborAdvCommonEntry
        MAX-ACCESS  not-accessible
        STATUS      current
        DESCRIPTION
            "This table provides one row for each BS sector."
        INDEX     { ifIndex }
        ::= { wmanIf2mBsNeighborAdvCommonTable 1 }

WmanIf2mBsNeighborAdvCommonEntry::= SEQUENCE {
        wmanIf2mBsSkipOptions                   WmanIf2mSkipOptBitMap,
        wmanIf2mBsOperatorId                    WmanIf2mNbrOperatorId,
        wmanIf2mBsNumOfNeighbors                Unsigned32,
        wmanIf2mBsConfigChangeCount             Integer32}

wmanIf2mBsSkipOptions OBJECT-TYPE
        SYNTAX      WmanIf2mSkipOptBitMap
        MAX-ACCESS  read-write
        STATUS      current
        DESCRIPTION
            "When a bit is set to 1, its corresponding field will be
             omitted."
        REFERENCE
            "Subclause 6.3.2.3.42"
        ::= { wmanIf2mBsNeighborAdvCommonEntry 1 }

wmanIf2mBsOperatorId OBJECT-TYPE
        SYNTAX      WmanIf2mNbrOperatorId
        MAX-ACCESS  read-write
        STATUS      current
        DESCRIPTION
            "The unique network ID shared by an association of BS. The
             'Operator IE' field is present only if Bit 0 of
             wmanIf2mBsSkipOptions is 0."
        REFERENCE
            "Subclause 6.3.2.3.42"
        ::= { wmanIf2mBsNeighborAdvCommonEntry 2 }

wmanIf2mBsNumOfNeighbors OBJECT-TYPE
        SYNTAX      Unsigned32 (0 .. 15)
        MAX-ACCESS  read-write
        STATUS      current
        DESCRIPTION
            "The count of the unique combination of Neighbor BSID,
             Preamble Index, and DCD."
        REFERENCE
            "Subclause 6.3.2.3.42"
        ::= { wmanIf2mBsNeighborAdvCommonEntry 3 }

wmanIf2mBsConfigChangeCount OBJECT-TYPE
        SYNTAX      Integer32 (0 .. 255)
        MAX-ACCESS  read-write
        STATUS      current
```



```
        DESCRIPTION
            "Incremented by one (modulo 256) whenever any of the values
             relating to any included data element changes, including
             DCD and UCD parameters. If the value of this count in a
             subsequent MOB_NBR-ADV message remains the same, the MS
             can quickly disregard the entire message."
        REFERENCE
            "Subclause 6.3.2.3.42"
        ::= { wmanIf2mBsNeighborAdvCommonEntry 4 }

wmanIf2mBsNeighborAdvertizementTable OBJECT-TYPE
        SYNTAX      SEQUENCE OF WmanIf2mBsNeighborAdvertizementEntry
        MAX-ACCESS  not-accessible
        STATUS      current
        DESCRIPTION
            "This table contains the attributes specific to each neighbor
             BS for the MOB_NBR-ADV message."
        REFERENCE
            "Subclause 6.3.2.3.42"
        ::= { wmanIf2mBsNeighborAdv 2 }

wmanIf2mBsNeighborAdvertizementEntry OBJECT-TYPE
        SYNTAX      WmanIf2mBsNeighborAdvertizementEntry
        MAX-ACCESS  not-accessible
        STATUS      current
        DESCRIPTION
            "This table provides one row for each neighboring BSs."
        INDEX     { ifIndex, wmanIf2mBsNeighborBsIndex }
        ::= { wmanIf2mBsNeighborAdvertizementTable 1 }

WmanIf2mBsNeighborAdvertizementEntry::= SEQUENCE {
        wmanIf2mBsNeighborBsIndex               Integer32,
        wmanIf2mBsNeighborBsId                  WmanIf2mNbrBsId,
        wmanIf2mBsPhyProfileId                  WmanIf2mPhyProfileId,
        wmanIf2mBsFaIndex                       Unsigned32,
        wmanIf2mBsEirp                          Integer32,
        wmanIf2mBsPreampleSubchIndex            Unsigned32,
        wmanIf2mBsHandoverProcOptimization      WmanIf2mHoProcOptm,
        wmanIf2mBsSchedulingService             WmanIf2mSchedulingSupp,
        wmanIf2mBsChannelBandwidth              Integer32,
        wmanIf2mBsFftSize                       WmanIf2TcOfdmaFftSize,
        wmanIf2mBsCyclicPrefix                  WmanIf2TcOfdmaCp,
        wmanIf2mBsFrameDurationCode             WmanIf2TcOfdmaFrame,
        wmanIf2mBsMobilityFeatureSupported      WmanIf2mOfdmaMobility,
        wmanIf2mBsNrbBsPagingGroupListIndex     Integer32,
        wmanIf2mBsNeighborAdvRowStatus          RowStatus}

wmanIf2mBsNeighborBsIndex OBJECT-TYPE
        SYNTAX      Integer32 (0 .. 15)
        MAX-ACCESS  not-accessible
        STATUS      current
        DESCRIPTION
            "Index to entries in wmanIf2mBsNeighborAdvertizementTable."
        ::= { wmanIf2mBsNeighborAdvertizementEntry 1 }
```

```
wmanIf2mBsNeighborBsId OBJECT-TYPE
        SYNTAX      WmanIf2mNbrBsId
        MAX-ACCESS  read-create
        STATUS      current
        DESCRIPTION
            "The least significant 24 bits of the Base Station ID
             parameter in the DL-MAP message of the Neighbor BS. The
             'Neighbor BSID' field is present only if Bit 1 of
             wmanIf2mBsSkipOptions bitmap is 0."
        ::= { wmanIf2mBsNeighborAdvertizementEntry 2 }

wmanIf2mBsPhyProfileId OBJECT-TYPE
        SYNTAX      WmanIf2mPhyProfileId
        MAX-ACCESS  read-create
        STATUS      current
        DESCRIPTION
            "Aggregated IDs of Co-located FA Indicator, FA Configuration
             Indicator, FFT size, Bandwidth, Operation Mode of the
             starting subchannelization of a frame, and Channel Number."
        REFERENCE
            "Subclause 6.3.2.3.42, Table 144"
        ::= { wmanIf2mBsNeighborAdvertizementEntry 3 }

wmanIf2mBsFaIndex OBJECT-TYPE
        SYNTAX      Unsigned32 (0..255)
        MAX-ACCESS  read-create
        STATUS      current
        DESCRIPTION
            "This field is present only if the faIndexInd bit in
             WmanIf2mPhyProfileId is set to 1. Its definition shall be
             determined by a service provider or a governmental body
             like FCC after the licensed band is determined."
        REFERENCE
            "Subclause 6.3.2.3.42"
        ::= { wmanIf2mBsNeighborAdvertizementEntry 4 }

wmanIf2mBsEirp OBJECT-TYPE
        SYNTAX      Integer32 (-128 .. 127)
        UNITS       "dBm"
        MAX-ACCESS  read-create
        STATUS      current
        DESCRIPTION
            "This field is present only if the bsEirpInd bit in
             WmanIf2mPhyProfileId is not set. Otherwise, the BS has the
             same EIRP as the serving BS."
        REFERENCE
            "Subclause 6.3.2.3.42"
        ::= { wmanIf2mBsNeighborAdvertizementEntry 5 }

wmanIf2mBsPreampleSubchIndex OBJECT-TYPE
        SYNTAX      Unsigned32 (0 .. 255)
        MAX-ACCESS  read-create
        STATUS      current
```



```
        DESCRIPTION
            "OFDMA PHY - this field defines the PHY specific preamble.
             OFDM PHY - the 5 LSB contain the active DL subchannel
                        index. The 3 MSB shall be Reserved and set to
                        '0b000'"
        REFERENCE
            "Subclause 6.3.2.3.42"
        ::= { wmanIf2mBsNeighborAdvertizementEntry 6 }

wmanIf2mBsHandoverProcOptimization OBJECT-TYPE
        SYNTAX      WmanIf2mHoProcOptm
        MAX-ACCESS  read-create
        STATUS      current
        DESCRIPTION
            "This field is present only if omitHoProcOptimization bit in
             WmanIf2mPhyProfileId is not set. Each bit in this field
             indicates certain reentry message may be omitted."
        REFERENCE
            "Subclause 6.3.2.3.42"
        ::= { wmanIf2mBsNeighborAdvertizementEntry 7 }

wmanIf2mBsSchedulingService OBJECT-TYPE
        SYNTAX      WmanIf2mSchedulingSupp
        MAX-ACCESS  read-create
        STATUS      current
        DESCRIPTION
            "This field is present only if omitQosRelatedField bit in
             WmanIf2mPhyProfileId is not set."
        REFERENCE
            "Subclause 6.3.2.3.42"
        ::= { wmanIf2mBsNeighborAdvertizementEntry 8 }

wmanIf2mBsChannelBandwidth OBJECT-TYPE
        SYNTAX      Integer32 (0 .. 127)
        UNITS       "125KHz"
        MAX-ACCESS  read-create
        STATUS      current
        DESCRIPTION
            "This field indicates the channel BW in units of 125 kHz in
             PHY mode ID."
        REFERENCE
            "Subclause 11.18.2, Table 611"
        ::= { wmanIf2mBsNeighborAdvertizementEntry 9 }

wmanIf2mBsFftSize OBJECT-TYPE
        SYNTAX      WmanIf2TcOfdmaFftSize
        MAX-ACCESS  read-create
        STATUS      current
        DESCRIPTION
            "This field indicates the channel BW in units of 125 kHz
             for OFDMA PHY in PHY mode ID.."
        REFERENCE
            "Subclause 11.18.2, Table 611"
        ::= { wmanIf2mBsNeighborAdvertizementEntry 10 }
```

```
wmanIf2mBsCyclicPrefix OBJECT-TYPE
        SYNTAX      WmanIf2TcOfdmaCp
        MAX-ACCESS  read-create
        STATUS      current
        DESCRIPTION
            "This field indicates the CP for OFDMA PHY in PHY mode ID."
        REFERENCE
            "Subclause 11.18.2, Table 611"
        ::= { wmanIf2mBsNeighborAdvertizementEntry 11 }

wmanIf2mBsFrameDurationCode OBJECT-TYPE
        SYNTAX      WmanIf2TcOfdmaFrame
        MAX-ACCESS  read-create
        STATUS      current
        DESCRIPTION
            "This field indicates the frame duration for ODMA PHY in
             PHY mode ID."
        REFERENCE
            "Subclause 11.18.2, Table 611"
        ::= { wmanIf2mBsNeighborAdvertizementEntry 12 }

wmanIf2mBsMobilityFeatureSupported OBJECT-TYPE
        SYNTAX      WmanIf2mOfdmaMobility
        MAX-ACCESS  read-create
        STATUS      current
        DESCRIPTION
            "This field indicates whether the neighbor BS supports
             mobility features."
        REFERENCE
            "Subclause 11.7.13.1"
        ::= { wmanIf2mBsNeighborAdvertizementEntry 13 }

wmanIf2mBsNrbBsPagingGroupListIndex OBJECT-TYPE
        SYNTAX      Integer32 (0 .. 65535)
        MAX-ACCESS  read-create
        STATUS      current
        DESCRIPTION
            "If idle mode is supported, this index maps to
             wmanIf2mBsPagingGroupListId in wmanIf2mBsPagingGroupsTable
             , and is used to identify the list of paging group IDs,
             assigned to a neighbor BS."
        ::= { wmanIf2mBsNeighborAdvertizementEntry 14 }

wmanIf2mBsNeighborAdvRowStatus OBJECT-TYPE
        SYNTAX      RowStatus
        MAX-ACCESS  read-create
        STATUS      current
        DESCRIPTION
            "This object is used to create a new row or modify or delete
             an existing row in this table. If the implementator of this
             MIB has choosen not to implement 'dynamic assignment' of
             profiles, this object is not useful and should return
             noSuchName upon SNMP request."
```



```
        ::= { wmanIf2mBsNeighborAdvertizementEntry 15 }

wmanIf2mBsNeighborBsOfdmaUcdTable OBJECT-TYPE
        SYNTAX      SEQUENCE OF WmanIf2mBsNeighborBsOfdmaUcdEntry
        MAX-ACCESS  not-accessible
        STATUS      current
        DESCRIPTION
            "This table contains the attributes of the UCD message for
             the neighboring BSs."
        REFERENCE
            "Table 567, Table 570"
        ::= { wmanIf2mBsNeighborAdv 3 }

wmanIf2mBsNeighborBsOfdmaUcdEntry OBJECT-TYPE
        SYNTAX      WmanIf2mBsNeighborBsOfdmaUcdEntry
        MAX-ACCESS  not-accessible
        STATUS      current
        DESCRIPTION
            "This table provides one row for each neighboring BS."
        INDEX     { wmanIf2mBsNeighborBsId }
        ::= { wmanIf2mBsNeighborBsOfdmaUcdTable 1 }

WmanIf2mBsNeighborBsOfdmaUcdEntry ::= SEQUENCE {
        wmanIf2mBsOfdmaCtBasedResvTimeout       Integer32,
        wmanIf2mBsOfdmaUplinkCenterFreq         Unsigned32,
        wmanIf2mBsOfdmaUlRadioResource          Integer32,
        wmanIf2mBsOfdmaHandoverRangingStart     Integer32,
        wmanIf2mBsOfdmaHandoverRangingEnd       Integer32,
        wmanIf2mBsOfdmaUlAmcAlloPhyBandsBitmap  OCTET STRING,
        wmanIf2mBsOfdmaInitRngCodes             Integer32,
        wmanIf2mBsOfdmaPeriodicRngCodes         Integer32,
        wmanIf2mBsOfdmaBWReqCodes               Integer32,
        wmanIf2mBsOfdmaPeriodRngBackoffStart    Integer32,
        wmanIf2mBsOfdmaPeriodRngBackoffEnd      Integer32,
        wmanIf2mBsOfdmaStartOfRngCodes          Integer32,
        wmanIf2mBsOfdmaPermutationBase          Integer32,
        wmanIf2mBsOfdmaULAllocSubchBitmap       OCTET STRING,
        wmanIf2mBsOfdmaOptPermULAlocSubchBitmap OCTET STRING,
        wmanIf2mBsOfdmaBandAMCAllocThreshold    Integer32,
        wmanIf2mBsOfdmaBandAMCReleaseThreshold  Integer32,
        wmanIf2mBsOfdmaBandAMCAllocTimer        Integer32,
        wmanIf2mBsOfdmaBandAMCReleaseTimer      Integer32,
        wmanIf2mBsOfdmaBandStatRepMAXPeriod     Integer32,
        wmanIf2mBsOfdmaBandAMCRetryTimer        Integer32,
        wmanIf2mBsOfdmaSafetyChAllocThreshold   Integer32,
        wmanIf2mBsOfdmaSafetyChReleaseThreshold Integer32,
        wmanIf2mBsOfdmaSafetyChAllocTimer       Integer32,
        wmanIf2mBsOfdmaSafetyChReleaseTimer     Integer32,
        wmanIf2mBsOfdmaBinStatusReportMaxPeriod Integer32,
        wmanIf2mBsOfdmaSafetyChRetryTimer       Integer32,
        wmanIf2mBsOfdmaHARQAckDelayDLBurst      WmanIf2TcHarqAckDelay,
        wmanIf2mBsOfdmaCqichBandAmcTransDelay   Integer32,
        wmanIf2mBsOfdmaMaxRetransmission        Integer32,
        wmanIf2mBsOfdmaNormalizedCnOverride     OCTET STRING,
```

```
        wmanIf2mBsOfdmaSizeOfCqichId            Integer32,
        wmanIf2mBsOfdmaNormalizedCnValue        Integer32,
        wmanIf2mBsOfdmaNormalizedCnOverride2    OCTET STRING,
        wmanIf2mBsOfdmaBandAmcEntryAvgCinr      Integer32,
        wmanIf2mBsOfdmaAasPreambleUpperBond     Integer32,
        wmanIf2mBsOfdmaAasPreambleLowerBond     Integer32,
        wmanIf2mBsOfdmaAasBeamSelectAllowed     WmanIf2TcAasBeamSel,
        wmanIf2mBsOfdmaCqichIndicationFlag      OCTET STRING,
        wmanIf2mBsOfdmaMsUpPowerAdjStep         Unsigned32,
        wmanIf2mBsOfdmaMsDownPowerAdjStep       Unsigned32,
        wmanIf2mBsOfdmaMinPowerOffsetAdj        Integer32,
        wmanIf2mBsOfdmaMaxPowerOffsetAdj        Integer32,
        wmanIf2mBsOfdmaHandoverRangingCodes     Integer32,
        wmanIf2mBsOfdmaInitialRangingInterval   Unsigned32,
        wmanIf2mBsOfdmaTxPowerReport            WmanIf2TcTxPowerReport,
        wmanIf2mBsOfdmaNormalizedCnChSounding   Integer32,
        wmanIf2mBsOfdmaInitialRngBackoffStart   Integer32,
        wmanIf2mBsOfdmaInitialRngBackoffEnd     Integer32,
        wmanIf2mBsOfdmaBwRequestBackoffStart    Integer32,
        wmanIf2mBsOfdmaBwRequestBackoffEnd      Integer32,
        wmanIf2mBsOfdmaUlPuscSubChRotation      Integer32,
        wmanIf2mBsOfdmaRelPwrOffetUlHarqBurst   Integer32,
        wmanIf2mBsOfdmaRelPwrOffetUlMacMgmBurst Unsigned32,
        wmanIf2mBsOfdmaUlInitialTxTiming        Integer32,
        wmanIf2mBsOfdmaUlPhyModeId              WmanIf2TcUlPhyModeId,
        wmanIf2mBsOfdmaFastFeedbackRegion       WmanIf2TcFastFeedback,
        wmanIf2mBsOfdmaHarqAckRegion            WmanIf2TcHarqAckRegion,
        wmanIf2mBsOfdmaRangingRegion            WmanIf2TcRangingRegion,
        wmanIf2mBsOfdmaSoundingRegion           WmanIf2TcSoundingRegion,
        wmanIf2mBsOfdmaMsTxPowerLimit           Unsigned32,
        wmanIf2mBsOfdmaHfddGroupSwitchDelay     Integer32,
        wmanIf2mBsOfdmaFrameOffset              WmanIf2TcFrameOffset,
        wmanIf2mBsOfdmaNumOfPowerControlBits    WmanIf2TcPwrCntlBits,
        wmanIf2mBsOfdmaUcdConfigChangeCount     Integer32}

wmanIf2mBsOfdmaCtBasedResvTimeout OBJECT-TYPE
        SYNTAX      Integer32 (1..255)
        MAX-ACCESS  read-write
        STATUS      current
        DESCRIPTION
            "The number of UL-MAPs to receive before contention-based
             reservation is attempted again for the same connection."
        ::= { wmanIf2mBsNeighborBsOfdmaUcdEntry 1 }

wmanIf2mBsOfdmaUplinkCenterFreq OBJECT-TYPE
        SYNTAX      Unsigned32
        UNITS       "kHz"
        MAX-ACCESS  read-write
        STATUS      current
        DESCRIPTION
            " Uplink center frequency (kHz)"
        ::= { wmanIf2mBsNeighborBsOfdmaUcdEntry 2 }

wmanIf2mBsOfdmaHandoverRangingStart OBJECT-TYPE
```



```
        SYNTAX      Integer32 (0..15)
        MAX-ACCESS  read-write
        STATUS      current
        DESCRIPTION
            "Initial backoff window size for MS performing initial
             ranging during handover process, expressed as a power of 2"
        ::= { wmanIf2mBsNeighborBsOfdmaUcdEntry 3 }

wmanIf2mBsOfdmaHandoverRangingEnd OBJECT-TYPE
        SYNTAX      Integer32 (0..15)
        MAX-ACCESS  read-write
        STATUS      current
        DESCRIPTION
            "Final backoff window size for MS performing initial
             ranging during handover process, expressed as a power
             of 2."
        ::= { wmanIf2mBsNeighborBsOfdmaUcdEntry 4 }

wmanIf2mBsOfdmaUlRadioResource OBJECT-TYPE
        SYNTAX      Integer32 (0 .. 100)
        UNITS       "%"
        MAX-ACCESS  read-write
        STATUS      current
        DESCRIPTION
            "Indicates the average percentage ratio of non-assigned UL
             radio resources to the total usable UL radio resources."
        ::= { wmanIf2mBsNeighborBsOfdmaUcdEntry 5 }

wmanIf2mBsOfdmaUlAmcAlloPhyBandsBitmap OBJECT-TYPE
        SYNTAX      OCTET STRING (SIZE (6))
        MAX-ACCESS  read-write
        STATUS      current
        DESCRIPTION
            "A bitmap describing the physical bands allocated to the
             segment in the UL, when using the optional AMC permutation
             with regular MAPs (see 8.4.6.3). The LSB of the first byte
             shall correspond to the physical band 0. For any bit that
             is not set, the corresponding physical bands shall not be
             used by the SS on that segment. When this TLV is not
             present, BS may allocate any physical bands to an SS."
        ::= { wmanIf2mBsNeighborBsOfdmaUcdEntry 6 }

wmanIf2mBsOfdmaInitRngCodes OBJECT-TYPE
        SYNTAX      Integer32 (0 .. 255)
        MAX-ACCESS  read-write
        STATUS      current
        DESCRIPTION
            "Number of initial ranging CDMA codes."
        DEFVAL      { 30 }
        ::= { wmanIf2mBsNeighborBsOfdmaUcdEntry 7 }

wmanIf2mBsOfdmaPeriodicRngCodes OBJECT-TYPE
        SYNTAX      Integer32 (0 .. 255)
        MAX-ACCESS  read-write
```

```
        STATUS      current
        DESCRIPTION
            "Number of periodic ranging CDMA codes."
        DEFVAL     { 30 }
        ::= { wmanIf2mBsNeighborBsOfdmaUcdEntry 8 }

wmanIf2mBsOfdmaBWReqCodes OBJECT-TYPE
        SYNTAX      Integer32 (0..255)
        MAX-ACCESS  read-write
        STATUS      current
        DESCRIPTION
            "Number of bandwidth request codes."
        DEFVAL     { 30 }
        ::= { wmanIf2mBsNeighborBsOfdmaUcdEntry 9 }

wmanIf2mBsOfdmaPeriodRngBackoffStart OBJECT-TYPE
        SYNTAX      Integer32 (0 .. 15)
        MAX-ACCESS read-write
        STATUS      current
        DESCRIPTION
            "Initial backoff window size for periodic ranging contention
             , expressed as a power of 2."
        DEFVAL     { 0 }
        ::= { wmanIf2mBsNeighborBsOfdmaUcdEntry 10 }

wmanIf2mBsOfdmaPeriodRngBackoffEnd OBJECT-TYPE
        SYNTAX      Integer32 (0 .. 15)
        MAX-ACCESS  read-write
        STATUS      current
        DESCRIPTION
            "Final backoff window size for periodic ranging contention,
             expressed as a power of 2."
        DEFVAL     { 15 }
        ::= { wmanIf2mBsNeighborBsOfdmaUcdEntry 11 }

wmanIf2mBsOfdmaStartOfRngCodes OBJECT-TYPE
        SYNTAX      Integer32 (0..255)
        MAX-ACCESS  read-write
        STATUS      current
        DESCRIPTION
            "Indicates the starting number, S, of the group of codes
             used for this uplink.All the ranging codes used on this
             uplink will be between S and ((S+N+M+L) mod 256). Where,
               N: the number of initial-ranging codes
               M: the number of periodic-ranging codes
               L: the number of bandwidth-request codes
               O: the number of handover-ranging codes"
        DEFVAL     { 0 }
        ::= { wmanIf2mBsNeighborBsOfdmaUcdEntry 12 }

wmanIf2mBsOfdmaPermutationBase OBJECT-TYPE
        SYNTAX      Integer32 (0..127)
        MAX-ACCESS  read-write
        STATUS      current
```



```
        DESCRIPTION
            "Determines the UL_PermBase parameter for the subcarrier
             permutation to be used on this uplink channel.
                 UL_PermBase = 7 LSBs of Permutation base."
        DEFVAL     { 0 }
        ::= { wmanIf2mBsNeighborBsOfdmaUcdEntry 13 }

wmanIf2mBsOfdmaULAllocSubchBitmap OBJECT-TYPE
        SYNTAX      OCTET STRING (SIZE (9))
        MAX-ACCESS  read-write
        STATUS      current
        DESCRIPTION
            "This is a bitmap describing the physical sub-channels
             allocated to the segment in the UL, when using the uplink
             PUSC permutation. The LSB of the first byte shall corrspond
             to subchannel 0. For any bit that is not set, the
             corresponding subchannel shall not be used by the SS on
             that segment"
        ::= { wmanIf2mBsNeighborBsOfdmaUcdEntry 14 }

wmanIf2mBsOfdmaOptPermULAlocSubchBitmap OBJECT-TYPE
        SYNTAX      OCTET STRING (SIZE (13))
        MAX-ACCESS  read-write
        STATUS      current
        DESCRIPTION
            "This is a bitmap describing the sub-channels allocated to
             the segment in the UL, when using the uplink optional PUSC
             permutation. The LSB of the first byte shall correspond to
             subchannel 0. For any bit that is not set, the
             corresponding subchannel shall not be used by the SS on
             that segment. When this TLV is not present, BS may allocate
             any subchannels to an SS."
      REFERENCE
             "Subclause 8.3.6.2.5"
        ::= { wmanIf2mBsNeighborBsOfdmaUcdEntry 15 }

wmanIf2mBsOfdmaBandAMCAllocThreshold OBJECT-TYPE
        SYNTAX      Integer32 (-128 .. 127)
        UNITS       "dB"
        MAX-ACCESS  read-write
        STATUS      current
        DESCRIPTION
            "Threshold of the maximum of the standard deviations of the
             individual bands CINR measurements over time to trigger
             mode transition from normal subchannel to Band AMC"
        ::= { wmanIf2mBsNeighborBsOfdmaUcdEntry 16 }

wmanIf2mBsOfdmaBandAMCReleaseThreshold OBJECT-TYPE
        SYNTAX      Integer32 (-128 .. 127)
        UNITS       "dB"
        MAX-ACCESS  read-write
        STATUS      current
        DESCRIPTION
            "Threshold of the maximum of the standard deviations of the
```

```
             individual bands CINR measurements over time to trigger
             mode transition from Band AMC to normal subchannel"
        ::= { wmanIf2mBsNeighborBsOfdmaUcdEntry 17 }

wmanIf2mBsOfdmaBandAMCAllocTimer OBJECT-TYPE
        SYNTAX      Integer32 (0 .. 255)
        UNITS       "Frame"
        MAX-ACCESS  read-write
        STATUS      current
        DESCRIPTION
            "Minimum required number of frames to measure the average
             and standard deviation for the event of Band AMC triggering"
        ::= { wmanIf2mBsNeighborBsOfdmaUcdEntry 18 }

wmanIf2mBsOfdmaBandAMCReleaseTimer OBJECT-TYPE
        SYNTAX      Integer32 (0 .. 255)
        UNITS       "Frame"
        MAX-ACCESS  read-write
        STATUS      current
        DESCRIPTION
            "Minimum required number of frames to measure the average
             and standard deviation for the event triggering from Band
             AMC to normal subchannel"
        ::= { wmanIf2mBsNeighborBsOfdmaUcdEntry 19 }

wmanIf2mBsOfdmaBandStatRepMAXPeriod OBJECT-TYPE
        SYNTAX      Integer32 (0 .. 255)
        UNITS       "Frame"
        MAX-ACCESS  read-write
        STATUS      current
        DESCRIPTION
            "Maximum period between refreshing the Band CINR
             measurement by the unsolicited REP-RSP"
        ::= { wmanIf2mBsNeighborBsOfdmaUcdEntry 20 }

wmanIf2mBsOfdmaBandAMCRetryTimer OBJECT-TYPE
        SYNTAX      Integer32 (0 .. 255)
        UNITS       "Frame"
        MAX-ACCESS  read-write
        STATUS      current
        DESCRIPTION
            "Backoff timer between consecutive mode transitions from
             normal subchannel to Band AMC when the previous request
             is failed"
        ::= { wmanIf2mBsNeighborBsOfdmaUcdEntry 21 }

wmanIf2mBsOfdmaSafetyChAllocThreshold OBJECT-TYPE
        SYNTAX      Integer32 (-128 .. 127)
        UNITS       "dB"
        MAX-ACCESS  read-write
        STATUS      current
        DESCRIPTION
            "Safety channel allocation threshold."
        ::= { wmanIf2mBsNeighborBsOfdmaUcdEntry 22 }
```



```
wmanIf2mBsOfdmaSafetyChReleaseThreshold OBJECT-TYPE
        SYNTAX      Integer32 (-128 .. 127)
        UNITS       "dB"
        MAX-ACCESS  read-write
        STATUS      current
        DESCRIPTION
            "Safety channel release threshold."
        ::= { wmanIf2mBsNeighborBsOfdmaUcdEntry 23 }

wmanIf2mBsOfdmaSafetyChAllocTimer OBJECT-TYPE
        SYNTAX      Integer32 (0 .. 255)
        UNITS       "Frame"
        MAX-ACCESS  read-write
        STATUS      current
        DESCRIPTION
            "Safety channel allocation Timer."
        ::= { wmanIf2mBsNeighborBsOfdmaUcdEntry 24 }

wmanIf2mBsOfdmaSafetyChReleaseTimer OBJECT-TYPE
        SYNTAX      Integer32 (0 .. 255)
        UNITS       "Frame"
        MAX-ACCESS  read-write
        STATUS      current
        DESCRIPTION
            "Safety channel release Timer."
        ::= { wmanIf2mBsNeighborBsOfdmaUcdEntry 25 }

wmanIf2mBsOfdmaBinStatusReportMaxPeriod OBJECT-TYPE
        SYNTAX      Integer32 (0 .. 255)
        UNITS       "Frame"
        MAX-ACCESS  read-write
        STATUS      current
        DESCRIPTION
            "Bin Status Reporting MAX Period."
        ::= { wmanIf2mBsNeighborBsOfdmaUcdEntry 26 }

wmanIf2mBsOfdmaSafetyChRetryTimer OBJECT-TYPE
        SYNTAX      Integer32 (0 .. 255)
        UNITS       "Frame"
        MAX-ACCESS  read-write
        STATUS      current
        DESCRIPTION
            "Safety channel retry Timer."
        ::= { wmanIf2mBsNeighborBsOfdmaUcdEntry 27 }

wmanIf2mBsOfdmaHARQAckDelayDLBurst OBJECT-TYPE
        SYNTAX      WmanIf2TcHarqAckDelay
        MAX-ACCESS  read-write
        STATUS      current
        DESCRIPTION
            "This object defines the OFDMA H-ARQ ACK delay for DL
             burst."
        ::= { wmanIf2mBsNeighborBsOfdmaUcdEntry 28 }
```

```
wmanIf2mBsOfdmaCqichBandAmcTransDelay OBJECT-TYPE
        SYNTAX      Integer32 (0 .. 255)
        UNITS       "Frames"
        MAX-ACCESS  read-write
        STATUS      current
        DESCRIPTION
            "CQICH band AMC transition delay."
        DEFVAL      { 4 }
        ::= { wmanIf2mBsNeighborBsOfdmaUcdEntry 29 }

wmanIf2mBsOfdmaMaxRetransmission OBJECT-TYPE
        SYNTAX      Integer32 (1..255)
        MAX-ACCESS  read-write
        STATUS      current
        DESCRIPTION
            "Maximum number of retransmission in UL HARQ."
        DEFVAL      { 4 }
        ::= { wmanIf2mBsNeighborBsOfdmaUcdEntry 30 }

wmanIf2mBsOfdmaNormalizedCnOverride OBJECT-TYPE
        SYNTAX      OCTET STRING (SIZE (8))
        MAX-ACCESS  read-write
        STATUS      current
        DESCRIPTION
            "This is a list of numbers, where each number is encoded by
             one nibble, and interpreted as a signed integer. The
             nibbles correspond in order to the list define by Table
             334, starting from the second line, such that the LS
             nibble of the first byte corresponds to the second line in
             the table. The number encoded by each nibble represents
             the difference in normalized C/N relative to the previous
             line in the table."
        ::= { wmanIf2mBsNeighborBsOfdmaUcdEntry 31 }

wmanIf2mBsOfdmaSizeOfCqichId OBJECT-TYPE
        SYNTAX      Integer32 (0 .. 7)
        MAX-ACCESS  read-write
        STATUS      current
        DESCRIPTION
            "Size of CQICH ID field.
                 0 = 0 bits
                 1 = 3 bits
                 2 = 4 bits
                 3 = 5 bits
                 4 = 6 bits
                 5 = 7 bits
                 6 = 8 bits
                 7 = 9 bits"
        DEFVAL      { 0 }
        ::= { wmanIf2mBsNeighborBsOfdmaUcdEntry 32 }

wmanIf2mBsOfdmaNormalizedCnValue OBJECT-TYPE
        SYNTAX      Integer32 (-128..127)
```



```
        UNITS       "dB"
        MAX-ACCESS  read-write
        STATUS      current
        DESCRIPTION
            "It shall be interpreted as signed integer in dB. It
             corresponds to the normalized C/N value in the first line
             (counting except for header cell of table)"
        ::= { wmanIf2mBsNeighborBsOfdmaUcdEntry 33 }

wmanIf2mBsOfdmaNormalizedCnOverride2 OBJECT-TYPE
        SYNTAX      OCTET STRING (SIZE (7))
        MAX-ACCESS  read-write
        STATUS      current
        DESCRIPTION
            "This is a list of numbers, where each number is encoded
             by one nibble, and interpreted as a signed integer. The
             nibbles correspond in order to the list define by Table
             334, starting from the second line (counting except for
             the header cell of table), such that the LS nibble of
             the first byte corresponds to the second line in the
             table. The number encoded by each nibble represents the
             difference in normalized C/N relative to the previous
             line in the table."
        ::= { wmanIf2mBsNeighborBsOfdmaUcdEntry 34 }

wmanIf2mBsOfdmaBandAmcEntryAvgCinr OBJECT-TYPE
        SYNTAX      Integer32 (-128..127)
        UNITS       "dB"
        MAX-ACCESS  read-write
        STATUS      current
        DESCRIPTION
            "Threshold of the average CINR of the whole bandwidth to
             trigger mode transition from normal subchannel to AMC"
        ::= { wmanIf2mBsNeighborBsOfdmaUcdEntry 35 }

wmanIf2mBsOfdmaAasPreambleUpperBond OBJECT-TYPE
        SYNTAX      Integer32 (-128..127)
        UNITS       "0.25 dB"
        MAX-ACCESS  read-write
        STATUS      current
        DESCRIPTION
            "Upper bound of AAS preamble."
        ::= { wmanIf2mBsNeighborBsOfdmaUcdEntry 36 }

wmanIf2mBsOfdmaAasPreambleLowerBond OBJECT-TYPE
        SYNTAX      Integer32 (-128..127)
        UNITS       "0.25 dB"
        MAX-ACCESS  read-write
        STATUS      current
        DESCRIPTION
            "Lower bound of AAS preamble."
        ::= { wmanIf2mBsNeighborBsOfdmaUcdEntry 37 }

wmanIf2mBsOfdmaAasBeamSelectAllowed OBJECT-TYPE
```

```
        SYNTAX      WmanIf2TcAasBeamSel
        MAX-ACCESS  read-write
        STATUS      current
        DESCRIPTION
            "Indicate whether unsolicited AAS Beam Select messages
             should be sent by the MS."
        DEFVAL      { allowed }
        ::= { wmanIf2mBsNeighborBsOfdmaUcdEntry 38 }

wmanIf2mBsOfdmaCqichIndicationFlag OBJECT-TYPE
        SYNTAX      OCTET STRING (SIZE (1))
        MAX-ACCESS  read-write
        STATUS      current
        DESCRIPTION
            "The N MSB values of this field represents the N-bit
             payload value on the Fast-Feedback channel reserved as
             indication flag for MS to initiate feedback on the
             Feedback header, where N is the number of payload bits
             used for S/N measurement feedback on the Fast-Feedback
             channel. The value shall not be set to all zeros."
        ::= { wmanIf2mBsNeighborBsOfdmaUcdEntry 39 }

wmanIf2mBsOfdmaMsUpPowerAdjStep OBJECT-TYPE
        SYNTAX      Unsigned32 (0 .. 255)
        UNITS       "0.01 dB"
        MAX-ACCESS  read-write
        STATUS      current
        DESCRIPTION
            "MS-specific up power offset adjustment step"
        ::= { wmanIf2mBsNeighborBsOfdmaUcdEntry 40 }

wmanIf2mBsOfdmaMsDownPowerAdjStep OBJECT-TYPE
        SYNTAX      Unsigned32 (0 .. 255)
        UNITS       "0.01 dB"
        MAX-ACCESS  read-write
        STATUS      current
        DESCRIPTION
            "MS-specific down power offset adjustment step"
        ::= { wmanIf2mBsNeighborBsOfdmaUcdEntry 41 }

wmanIf2mBsOfdmaMinPowerOffsetAdj OBJECT-TYPE
        SYNTAX      Integer32 (-128 .. 127)
        UNITS       "0.1 dB"
        MAX-ACCESS  read-write
        STATUS      current
        DESCRIPTION
            "Minimum level of power offset adjustment"
        ::= { wmanIf2mBsNeighborBsOfdmaUcdEntry 42 }

wmanIf2mBsOfdmaMaxPowerOffsetAdj OBJECT-TYPE
        SYNTAX      Integer32 (-128 .. 127)
        UNITS       "0.1 dB"
        MAX-ACCESS  read-write
        STATUS      current
```



```
        DESCRIPTION
            "Maximum level of power offset adjustment"
        ::= { wmanIf2mBsNeighborBsOfdmaUcdEntry 43 }

wmanIf2mBsOfdmaHandoverRangingCodes OBJECT-TYPE
        SYNTAX      Integer32 (0 .. 255)
        MAX-ACCESS  read-write
        STATUS      current
        DESCRIPTION
            "Number of handover ranging CDMA codes"
        ::= { wmanIf2mBsNeighborBsOfdmaUcdEntry 44 }

wmanIf2mBsOfdmaInitialRangingInterval OBJECT-TYPE
        SYNTAX      Unsigned32 (0 .. 255 )
        UNITS       "frames"
        MAX-ACCESS  read-write
        STATUS      current
        DESCRIPTION
            "Number of frames between initial ranging interval
             allocation."
        ::= { wmanIf2mBsNeighborBsOfdmaUcdEntry 45 }

wmanIf2mBsOfdmaTxPowerReport OBJECT-TYPE
        SYNTAX      WmanIf2TcTxPowerReport
        MAX-ACCESS  read-write
        STATUS      current
        DESCRIPTION
            "Tx Power Report."
        ::= { wmanIf2mBsNeighborBsOfdmaUcdEntry 46 }

wmanIf2mBsOfdmaNormalizedCnChSounding OBJECT-TYPE
        SYNTAX      Integer32 (-128 .. 127 )
        UNITS       "dB"
        MAX-ACCESS  read-write
        STATUS      current
        DESCRIPTION
            "Signed integer for the required C/N (dB) for Channel
             Sounding."
        ::= { wmanIf2mBsNeighborBsOfdmaUcdEntry 47 }

wmanIf2mBsOfdmaInitialRngBackoffStart OBJECT-TYPE
        SYNTAX      Integer32 (0 .. 15)
        MAX-ACCESS  read-write
        STATUS      current
        DESCRIPTION
            "Initial backoff window size for initial ranging
             contention, expressed as a power of 2."
        ::= { wmanIf2mBsNeighborBsOfdmaUcdEntry 48 }

wmanIf2mBsOfdmaInitialRngBackoffEnd OBJECT-TYPE
        SYNTAX      Integer32 (0 .. 15)
        MAX-ACCESS  read-write
        STATUS      current
        DESCRIPTION
```

```
            "Final backoff window size for initial ranging
             contention, expressed as a power of 2."
        ::= { wmanIf2mBsNeighborBsOfdmaUcdEntry 49 }

wmanIf2mBsOfdmaBwRequestBackoffStart OBJECT-TYPE
        SYNTAX      Integer32 (0 .. 15)
        MAX-ACCESS  read-write
        STATUS      current
        DESCRIPTION
            "Initial backoff window size for contention BW requests,
             expressed as a power of 2."
        ::= { wmanIf2mBsNeighborBsOfdmaUcdEntry 50 }

wmanIf2mBsOfdmaBwRequestBackoffEnd OBJECT-TYPE
        SYNTAX      Integer32 (0 .. 15)
        MAX-ACCESS  read-write
        STATUS      current
        DESCRIPTION
            "Final backoff window size for contention BW requests,
             expressed as a power of 2."
        ::= { wmanIf2mBsNeighborBsOfdmaUcdEntry 51 }

wmanIf2mBsOfdmaUlPuscSubChRotation OBJECT-TYPE
        SYNTAX      Integer32 (0 .. 1)
        MAX-ACCESS  read-write
        STATUS      current
        DESCRIPTION
            "Indicates the default setting of subchannel rotation in the
             UL frame.
               '0' - indicates UL PUSC subchannel rotation is enabled.
               '1' - indicates UL PUSC subchannel rotation is disabled."
        DEFVAL      { 0 }
        ::= { wmanIf2mBsNeighborBsOfdmaUcdEntry 52 }

wmanIf2mBsOfdmaRelPwrOffetUlHarqBurst OBJECT-TYPE
        SYNTAX      Integer32 (-8 .. 7)
        UNITS       "0.5dB"
        MAX-ACCESS  read-write
        STATUS      current
        DESCRIPTION
            "Offset for HARQ burst relative to non-HARQ burst.
             (signed integer in 0.5 dB unit)"
        DEFVAL      { 0 }
        ::= { wmanIf2mBsNeighborBsOfdmaUcdEntry 53 }

wmanIf2mBsOfdmaRelPwrOffetUlMacMgmBurst OBJECT-TYPE
        SYNTAX      Unsigned32 (0 .. 7)
        UNITS       "0.5dB"
        MAX-ACCESS  read-write
        STATUS      current
        DESCRIPTION
            "Power offset for UL burst containing a MAC management
             message relative to the normal traffic burst.
             (unsigned integer in 0.5 dB units)"
```



```
        DEFVAL      { 0 }
        ::= { wmanIf2mBsNeighborBsOfdmaUcdEntry 54 }

wmanIf2mBsOfdmaUlInitialTxTiming OBJECT-TYPE
        SYNTAX      Integer32 (0 .. 255)
        MAX-ACCESS  read-write
        STATUS      current
        DESCRIPTION
            "0x00: The timing is referenced to the
                  UL_Allocation_Start_Time.
             0x01 - 0xfe: Timing offset in unit of 2 PSs (two physical
                    slots) before 'UL_Allocation_Start_Time' to which
                    the MS timing shall be referenced. If this value is
                    larger than TTG-SSRTG, then MS shall consider this
                    value as 'TTGSSRTG'.
             0xff: The timing is referenced to the
                   UL_Allocation_Start_Time-TTG+SSRTG"
        ::= { wmanIf2mBsNeighborBsOfdmaUcdEntry 55 }

wmanIf2mBsOfdmaUlPhyModeId OBJECT-TYPE
        SYNTAX      WmanIf2TcUlPhyModeId
        MAX-ACCESS  read-write
        STATUS      current
        DESCRIPTION
            "Uplink PHY mode ID"
        ::= { wmanIf2mBsNeighborBsOfdmaUcdEntry 56 }

wmanIf2mBsOfdmaFastFeedbackRegion OBJECT-TYPE
        SYNTAX      WmanIf2TcFastFeedback
        MAX-ACCESS  read-write
        STATUS      current
        DESCRIPTION
            "Contains same fields as in the FAST FEEDBACK Allocation IE
             in Table 389:"
        ::= { wmanIf2mBsNeighborBsOfdmaUcdEntry 57 }

wmanIf2mBsOfdmaHarqAckRegion OBJECT-TYPE
        SYNTAX      WmanIf2TcHarqAckRegion
        MAX-ACCESS  read-write
        STATUS      current
        DESCRIPTION
            "HARQ Ack Region"
        ::= { wmanIf2mBsNeighborBsOfdmaUcdEntry 58 }

wmanIf2mBsOfdmaRangingRegion OBJECT-TYPE
        SYNTAX      WmanIf2TcRangingRegion
        MAX-ACCESS  read-write
        STATUS      current
        DESCRIPTION
            "Ranging Region"
        ::= { wmanIf2mBsNeighborBsOfdmaUcdEntry 59 }

wmanIf2mBsOfdmaSoundingRegion OBJECT-TYPE
        SYNTAX      WmanIf2TcSoundingRegion
```

```
        MAX-ACCESS  read-write
        STATUS      current
        DESCRIPTION
            "Sounding Region"
        ::= { wmanIf2mBsNeighborBsOfdmaUcdEntry 60 }

wmanIf2mBsOfdmaMsTxPowerLimit OBJECT-TYPE
        SYNTAX      Unsigned32 (0 .. 255)
        UNITS       "dBm"
        MAX-ACCESS  read-write
        STATUS      current
        DESCRIPTION
            "Specifies the maximum allowed MS transmit power. Values
             indicate power levels in 1 dB steps starting from 0 dBm."
        ::= { wmanIf2mBsNeighborBsOfdmaUcdEntry 61 }

wmanIf2mBsOfdmaHfddGroupSwitchDelay OBJECT-TYPE
        SYNTAX      Integer32 (1 .. 255)
        UNITS       "Frames"
        MAX-ACCESS  read-write
        STATUS      current
        DESCRIPTION
            "Specifies the delay of H-FDD Group Switching transition."
        REFERENCE
            "Subclause 8.4.4.1.1"
        ::= { wmanIf2mBsNeighborBsOfdmaUcdEntry 62 }

wmanIf2mBsOfdmaFrameOffset OBJECT-TYPE
        SYNTAX      WmanIf2TcFrameOffset
        MAX-ACCESS  read-write
        STATUS      current
        DESCRIPTION
            "Specifies the offset between the frame of the CQI channel
             / UL burst and the current frame."
        ::= { wmanIf2mBsNeighborBsOfdmaUcdEntry 63 }

wmanIf2mBsOfdmaNumOfPowerControlBits OBJECT-TYPE
        SYNTAX      WmanIf2TcPwrCntlBits
        MAX-ACCESS  read-write
        STATUS      current
        DESCRIPTION
            "Number of power control command bits Bq and Bd."
        ::= { wmanIf2mBsNeighborBsOfdmaUcdEntry 64 }

wmanIf2mBsOfdmaUcdConfigChangeCount OBJECT-TYPE
        SYNTAX      Integer32
        MAX-ACCESS  read-write
        STATUS      current
        DESCRIPTION
            "This represents the neighbor BS current UCD configuration
             change count."
        ::= { wmanIf2mBsNeighborBsOfdmaUcdEntry 65 }

wmanIf2mBsNeighborBsOfdmaDcdTable OBJECT-TYPE
```



```
        SYNTAX      SEQUENCE OF WmanIf2mBsNeighborBsOfdmaDcdEntry
        MAX-ACCESS  not-accessible
        STATUS      current
        DESCRIPTION
            "This table contains the attributes of the DCD message for
             the neighboring BSs."
        REFERENCE
            "Table 574"
        ::= { wmanIf2mBsNeighborAdv 4 }

wmanIf2mBsNeighborBsOfdmaDcdEntry OBJECT-TYPE
        SYNTAX      WmanIf2mBsNeighborBsOfdmaDcdEntry
        MAX-ACCESS  not-accessible
        STATUS      current
        DESCRIPTION
            "This table provides one row for each neighboring BS."
        INDEX     { wmanIf2mBsNeighborBsId }
        ::= { wmanIf2mBsNeighborBsOfdmaDcdTable 1 }

WmanIf2mBsNeighborBsOfdmaDcdEntry ::= SEQUENCE {
        wmanIf2mBsOfdmaBsEIRP                    Integer32,
        wmanIf2mBsOfdmaChannelNumber             WmanIf2TcChannelNumber,
        wmanIf2mBsOfdmaMaxEirp                   Integer32,
        wmanIf2mBsOfdmaDownlinkCenterFreq        Unsigned32,
        wmanIf2mBsOfdmaBsId                      OCTET STRING,
        wmanIf2mBsOfdmaMacVersion                WmanIf2TcMacVersion,
        wmanIf2mBsOfdmaDlRadioResource           Integer32,
        wmanIf2mBsOfdmaHARQAackDelayULBurst      WmanIf2TcHarqAckDelay,
        wmanIf2mBsOfdmaHarqZonePermutation       WmanIf2TcPermutationTyp,
        wmanIf2mBsOfdmaHMaxRetransmission        Integer32,
        wmanIf2mBsOfdmaRssiCinrAvgParameter      WmanIf2TcRssiCinrAvg,
        wmanIf2mBsOfdmaDlAmcAlloPhyBandsBitmap   OCTET STRING,
        wmanIf2mBsOfdmaHandoverSupported         WmanIf2TcHoSupportType,
        wmanIf2mBsOfdmaThresholdAddBsDivSet      Integer32,
        wmanIf2mBsOfdmaThresholdDelBsDivSet      Integer32,
        wmanIf2mBsOfdmaAsrSlotLength             Integer32,
        wmanIf2mBsOfdmaAsrSwitchingPeriod        Integer32,
        wmanIf2mBsOfdmaHysteresisMargin          Integer32,
        wmanIf2mBsOfdmaTimeToTrigger             Integer32,
        wmanIf2mBsOfdmaMihCapability             WmanIf2TcMihCapability,
        wmanIf2mBsOfdmaNspChangeCount            Integer32,
        wmanIf2mBsOfdmaCellType                  WmanIf2TcCellType,
        wmanIf2mBsOfdmaRestartCount              Integer32,
        wmanIf2mBsOfdmaDcdConfigChangeCount      Integer32,
        wmanIf2mBsOfdmaFddDlInterGroupGap        WmanIf2TcFddDlGrpGap,
        wmanIf2mBsOfdmaFddPartitionChange        Integer32,
        wmanIf2mBsOfdmaPhyDlPowerControlMode     WmanIf2TcPwrCntlMode,
        wmanIf2mBsOfdmaTtgTtdOrHfddGroup1        Integer32,
        wmanIf2mBsOfdmaTtgHfddGroup2             Integer32,
        wmanIf2mBsOfdmaRtgTtdOrHfddGroup1        Integer32,
        wmanIf2mBsOfdmaRtgHfddGroup2             Integer32,
        wmanIf2mBsOfdmaTsuc1ActSubchannelBitmap OCTET STRING,
        wmanIf2mBsOfdmaTsuc2ActSubchannelBitmap OCTET STRING,
        wmanIf2mBsOfdmaCidDescriptor             WmanIf2TcCidDescriptor}
```

```
wmanIf2mBsOfdmaBsEIRP OBJECT-TYPE
        SYNTAX      Integer32 (-32768..32767)
        UNITS       "dBm"
        MAX-ACCESS  read-write
        STATUS      current
        DESCRIPTION
            "The EIRP is the equivalent isotropic radiated power of the
             base station, which is computed for a simple
             single-antenna transmitter."
        ::= { wmanIf2mBsNeighborBsOfdmaDcdEntry 1 }

wmanIf2mBsOfdmaChannelNumber OBJECT-TYPE
        SYNTAX      WmanIf2TcChannelNumber
        MAX-ACCESS  read-write
        STATUS      current
        DESCRIPTION
            "Downlink channel number as defined in 8.5. Used for
             license-exempt operation only."
        ::= { wmanIf2mBsNeighborBsOfdmaDcdEntry 2 }

wmanIf2mBsOfdmaMaxEirp OBJECT-TYPE
        SYNTAX      Integer32 (-32768..32767)
        UNITS       "dBm"
        MAX-ACCESS  read-write
        STATUS      current
        DESCRIPTION
            "Initial Ranging Max. equivalent isotropic received power
             at BS Signed in units of 1 dBm."
        ::= { wmanIf2mBsNeighborBsOfdmaDcdEntry 3 }

wmanIf2mBsOfdmaDownlinkCenterFreq OBJECT-TYPE
        SYNTAX      Unsigned32
        UNITS       "kHz"
        MAX-ACCESS  read-write
        STATUS      current
        DESCRIPTION
            "Downlink center frequency (kHz)."
        ::= { wmanIf2mBsNeighborBsOfdmaDcdEntry 4 }

wmanIf2mBsOfdmaBsId OBJECT-TYPE
        SYNTAX      OCTET STRING (SIZE(6))
        MAX-ACCESS  read-write
        STATUS      current
        DESCRIPTION
            "Defines the encoding of BSID. The BSID is a 6 byte number
             and follows the encoding rules of MacAddress textual
             convention, i.e. as if it were transmitted
             least-significant bit first. The value should be displayed
             with 2 parts clearly separated by a colon e.g:
             001DFF:00003A. The most significant part is representing
             the Operator ID."
        ::= { wmanIf2mBsNeighborBsOfdmaDcdEntry 5 }
```



```
wmanIf2mBsOfdmaMacVersion OBJECT-TYPE
        SYNTAX      WmanIf2TcMacVersion
        MAX-ACCESS  read-write
        STATUS      current
        DESCRIPTION
            "This parameter specifies the version of 802.16 to which
             the message originator conforms."
        ::= { wmanIf2mBsNeighborBsOfdmaDcdEntry 6 }

wmanIf2mBsOfdmaDlRadioResource OBJECT-TYPE
        SYNTAX      Integer32 (0 .. 100)
        UNITS       "%"
        MAX-ACCESS  read-write
        STATUS      current
        DESCRIPTION
            "Indicates the average percentage ratio of non-assigned DL
             radio resources to the total usable DL radio resources."
        ::= { wmanIf2mBsNeighborBsOfdmaDcdEntry 7 }

wmanIf2mBsOfdmaHARQAackDelayULBurst OBJECT-TYPE
        SYNTAX      WmanIf2TcHarqAckDelay
        MAX-ACCESS  read-write
        STATUS      current
        DESCRIPTION
            "This object defines the OFDMA H-ARQ ACK delay for UL
             burst."
        ::= { wmanIf2mBsNeighborBsOfdmaDcdEntry 8 }

wmanIf2mBsOfdmaHarqZonePermutation OBJECT-TYPE
        SYNTAX      WmanIf2TcPermutationTyp
        MAX-ACCESS  read-write
        STATUS      current
        DESCRIPTION
            "Permutation type for broadcast region in HARQ zone"
        ::= { wmanIf2mBsNeighborBsOfdmaDcdEntry 9 }

wmanIf2mBsOfdmaHMaxRetransmission OBJECT-TYPE
        SYNTAX      Integer32 (0..255)
        MAX-ACCESS  read-write
        STATUS      current
        DESCRIPTION
            "Maximum number of retransmission in DL HARQ."
        DEFVAL      { 4 }
        ::= { wmanIf2mBsNeighborBsOfdmaDcdEntry 10 }

wmanIf2mBsOfdmaRssiCinrAvgParameter OBJECT-TYPE
        SYNTAX      WmanIf2TcRssiCinrAvg
        MAX-ACCESS  read-write
        STATUS      current
        DESCRIPTION
            "Default RSSI and CINR averaging parameter TLV."
        DEFVAL      { 51 }
        ::= { wmanIf2mBsNeighborBsOfdmaDcdEntry 11 }
```

```
wmanIf2mBsOfdmaDlAmcAlloPhyBandsBitmap OBJECT-TYPE
        SYNTAX      OCTET STRING (SIZE (6))
        MAX-ACCESS  read-write
        STATUS      current
        DESCRIPTION
            "A bitmap describing the physical bands allocated to the
             segment in the DL, when allocating AMC subchannels
             through the HARQ MAP, or through the Normal MAP, or for
             Band-AMC CINR reports, or using the optional AMC
             permutation (see 8.4.6.3). The LSB of the first byte
             shall correspond to band 0. For any bit that is not set,
             the corresponding band shall not be used by the SS on
             that segment. When this TLV is not present, BS may
             allocate any physical bands to an SS."
        ::= { wmanIf2mBsNeighborBsOfdmaDcdEntry 12 }

wmanIf2mBsOfdmaHandoverSupported OBJECT-TYPE
        SYNTAX      WmanIf2TcHoSupportType
        MAX-ACCESS  read-write
        STATUS      current
        DESCRIPTION
            "Indicates the types of handover supported.
             Bit 0 = HO
             Bit 1 = MDHO
             Bit 2 = FBSS HO."
        ::= { wmanIf2mBsNeighborBsOfdmaDcdEntry 13 }

wmanIf2mBsOfdmaThresholdAddBsDivSet OBJECT-TYPE
        SYNTAX      Integer32 (0..255)
        UNITS       "dB"
        MAX-ACCESS  read-write
        STATUS      current
        DESCRIPTION
            "Threshold used by the MS to add a neighbor BS to the
             diversity set. When the CINR of a neighbor BS is higher
             than H_Add_Threshold, the MS should send MOB_MSHO-REQ to
             request adding this neighbor BS to the diversity set.
             This threshold is used for the MS that is performing
             MDHO/FBSS HO. If the BS does not support FBSS HO/MDHO,
             this value is not set."
        ::= { wmanIf2mBsNeighborBsOfdmaDcdEntry 14 }

wmanIf2mBsOfdmaThresholdDelBsDivSet OBJECT-TYPE
        SYNTAX      Integer32 (0..255)
        UNITS       "dB"
        MAX-ACCESS  read-write
        STATUS      current
        DESCRIPTION
            "Threshold used by the MS to delete a neighbor BS to the
             diversity set. When the CINR of a neighbor BS is lower
             than H_Add_Threshold, the MS should send MOB_MSHO-REQ to
             request dropping this neighbor BS to the diversity set.
             This threshold is used for the MS that is performing
             MDHO/FBSS HO. If the BS does not support FBSS HO/MDHO,
```



```
             this value is not set."
        ::= { wmanIf2mBsNeighborBsOfdmaDcdEntry 15 }

wmanIf2mBsOfdmaAsrSlotLength OBJECT-TYPE
        SYNTAX      Integer32 (0..15)
        UNITS       "Frames"
        MAX-ACCESS  read-write
        STATUS      current
        DESCRIPTION
            "Bit 0..3 of ASR Slot Length and Switching Period. For FBSS
             operation, the time axis is slotted by an ASR (Anchor
             Switch Reporting) slot that is
             wmanIf2mBsOfdmaAsrSlotLength frame long."
        ::= { wmanIf2mBsNeighborBsOfdmaDcdEntry 16 }

wmanIf2mBsOfdmaAsrSwitchingPeriod OBJECT-TYPE
        SYNTAX      Integer32 (0..15)
        UNITS       "ASR slots"
        MAX-ACCESS  read-write
        STATUS      current
        DESCRIPTION
            "Bit 0..3 of ASR Slot Length and Switching Period.
             A switching period is introduced whose duration is equals
             to wmanIf2mBsOfdmaAsrSwitchingPeriod ASR slots that should
             be long enough such that certain process (e.g., HARQ
             transmission, backhaul context transfer) can be completed
             at the current anchor BS before the MS switches to the new
             anchor BS."
        ::= { wmanIf2mBsNeighborBsOfdmaDcdEntry 17 }

wmanIf2mBsOfdmaHysteresisMargin OBJECT-TYPE
        SYNTAX      Integer32 (0..57)
        UNITS       "dB"
        MAX-ACCESS  read-write
        STATUS      current
        DESCRIPTION
            "When the CINR of a neighbor BS is larger than the sum of
             the CINR of the current serving BS and
             wmanIf2mBsOfdmaHysteresisMargin for the time-to-trigger
             duration, then the neighbor BS is included in the list
             of possible target BSs in MOB_MSHO-REQ."
        ::= { wmanIf2mBsNeighborBsOfdmaDcdEntry 18 }

wmanIf2mBsOfdmaTimeToTrigger OBJECT-TYPE
        SYNTAX      Integer32
        UNITS       "milliseconds"
        MAX-ACCESS  read-write
        STATUS      current
        DESCRIPTION
            "Indicates the time duration for MS decides to select a
             neighbor BS as a possible target BS. It is  applicable only
             for HHO."
        ::= { wmanIf2mBsNeighborBsOfdmaDcdEntry 19 }
```

```
wmanIf2mBsOfdmaMihCapability OBJECT-TYPE
        SYNTAX      WmanIf2TcMihCapability
        MAX-ACCESS  read-write
        STATUS      current
        DESCRIPTION
            "This object indicates the IEEE 802.21 Media Independent
             Handover Services capability of the BS."
        ::= { wmanIf2mBsNeighborBsOfdmaDcdEntry 20 }

wmanIf2mBsOfdmaNspChangeCount OBJECT-TYPE
        SYNTAX      Integer32 (0 .. 15)
        MAX-ACCESS  read-write
        STATUS      current
        DESCRIPTION
            "This object tracks the change of NSP List and/or Verbose
             NSP Name List. Inclusion of the NSP Change Count is only
             required if the base station transmits NSP List TLV in any
             SBC-RSP or SII-ADV message."
        ::= { wmanIf2mBsNeighborBsOfdmaDcdEntry 21 }

wmanIf2mBsOfdmaCellType OBJECT-TYPE
        SYNTAX      WmanIf2TcCellType
        MAX-ACCESS  read-write
        STATUS      current
        DESCRIPTION
            "This object defines BS classes to be used by the MS in the
             network for cell selection and re-selection."
        ::= { wmanIf2mBsNeighborBsOfdmaDcdEntry 22 }

wmanIf2mBsOfdmaRestartCount OBJECT-TYPE
        SYNTAX      Integer32 (0..255)
        MAX-ACCESS  read-only
        STATUS      current
        DESCRIPTION
            "The value is incremented by one whenever BS restarts. The
             value rolls over from 0 to 255."
        REFERENCE
            "Subclause 6.3.9.11"
        ::= { wmanIf2mBsNeighborBsOfdmaDcdEntry 23 }

wmanIf2mBsOfdmaDcdConfigChangeCount OBJECT-TYPE
        SYNTAX      Integer32
        MAX-ACCESS  read-write
        STATUS      current
        DESCRIPTION
            "This represents the neighbor BS current DCD configuration
             change count."
        ::= { wmanIf2mBsNeighborBsOfdmaDcdEntry 24 }

wmanIf2mBsOfdmaFddDlInterGroupGap OBJECT-TYPE
        SYNTAX      WmanIf2TcFddDlGrpGap
        MAX-ACCESS  read-write
        STATUS      current
        DESCRIPTION
```



```
            "Indicates the location and the size of inter-group gap
             location."
        ::= { wmanIf2mBsNeighborBsOfdmaDcdEntry 25 }

wmanIf2mBsOfdmaFddPartitionChange OBJECT-TYPE
        SYNTAX      Integer32 (0 .. 255)
        UNITS       "Frames"
        MAX-ACCESS  read-write
        STATUS      current
        DESCRIPTION
            "Indicate minimum number of frames (excluding current frame)
             before next possible change."
        ::= { wmanIf2mBsNeighborBsOfdmaDcdEntry 26 }

wmanIf2mBsOfdmaPhyDlPowerControlMode OBJECT-TYPE
        SYNTAX      WmanIf2TcPwrCntlMode
        MAX-ACCESS  read-only
        STATUS      current
        DESCRIPTION
            "This object defines the Power control mode change parameter
             that BS will send to MS in PCM_RSP message in OFDM and
             OFDMA PHY modes."
        ::= { wmanIf2mBsNeighborBsOfdmaDcdEntry 27 }

wmanIf2mBsOfdmaTtgTtdOrHfddGroup1 OBJECT-TYPE
        SYNTAX      Integer32 (0 .. 65535)
        UNITS       "PS"
        MAX-ACCESS  read-write
        STATUS      current
        DESCRIPTION
            "Transmit / Receive Transition Gap for TDD or HFDD group 1."
        ::= { wmanIf2mBsNeighborBsOfdmaDcdEntry 28 }

wmanIf2mBsOfdmaTtgHfddGroup2 OBJECT-TYPE
        SYNTAX      Integer32 (0 .. 65535)
        UNITS       "PS"
        MAX-ACCESS  read-write
        STATUS      current
        DESCRIPTION
            "Transmit / Receive Transition Gap for HFDD group 2. For TDD
             , '0' should be returned, when reading this object."
        ::= { wmanIf2mBsNeighborBsOfdmaDcdEntry 29 }

wmanIf2mBsOfdmaRtgTtdOrHfddGroup1 OBJECT-TYPE
        SYNTAX      Integer32 (0 .. 255)
        UNITS       "PS"
        MAX-ACCESS  read-write
        STATUS      current
        DESCRIPTION
            "Receive / Transmit Transition Gap for TDD or HFDD group 1."
        ::= { wmanIf2mBsNeighborBsOfdmaDcdEntry 30 }

wmanIf2mBsOfdmaRtgHfddGroup2 OBJECT-TYPE
        SYNTAX      Integer32 (0 .. 255)
```

```
        UNITS       "PS"
        MAX-ACCESS  read-write
        STATUS      current
        DESCRIPTION
            "Receive / Transmit Transition Gap for HFDD group 2. For TDD
             , '0' should be returned, when reading this object."
        ::= { wmanIf2mBsNeighborBsOfdmaDcdEntry 31 }

wmanIf2mBsOfdmaTsuc1ActSubchannelBitmap OBJECT-TYPE
        SYNTAX      OCTET STRING (SIZE (9))
        MAX-ACCESS  read-write
        STATUS      current
        DESCRIPTION
            "This is a bitmap describing the subchannels allocated to
             the segment in the DL, when using the TUSC1 permutation
             (see 8.4.6.1.2.4). The LSB of the least significant byte
             shall correspond to subchannel 0. For any bit that is not
             set, the MS on that segment shall not use the corresponding
             subchannel. The active subchannels are renumbered
             consecutively starting from 0."
        ::= { wmanIf2mBsNeighborBsOfdmaDcdEntry 32 }

wmanIf2mBsOfdmaTsuc2ActSubchannelBitmap OBJECT-TYPE
        SYNTAX      OCTET STRING (SIZE (9))
        MAX-ACCESS  read-write
        STATUS      current
        DESCRIPTION
            "This is a bitmap describing the subchannels allocated to
             the segment in the DL, when using the TUSC2 permutation
             (see 8.4.6.1.2.5). The LSB of the least significant byte
             shall correspond to subchannel 0. For any bit that is not
             set, the MS on that segment shall not use the
             corresponding subchannel. The active subchannels are
             renumbered consecutively starting from 0."
        ::= { wmanIf2mBsNeighborBsOfdmaDcdEntry 33 }

wmanIf2mBsOfdmaCidDescriptor OBJECT-TYPE
        SYNTAX      WmanIf2TcCidDescriptor
        MAX-ACCESS  read-write
        STATUS      current
        DESCRIPTION
            "DCD TLV Connection identifier descriptor object
             Most significant 11 bits = m (see Table 554)
             Least significant 5 bits = a (number of reserved transport
                                           CIDs per MS)"
        ::= { wmanIf2mBsNeighborBsOfdmaDcdEntry 34 }

wmanIf2mBsLbsAdvNeighborBsTable OBJECT-TYPE
        SYNTAX      SEQUENCE OF WmanIf2mBsLbsAdvNeighborBsEntry
        MAX-ACCESS  not-accessible
        STATUS      current
        DESCRIPTION
            "This table contains the attributes that are broadcast in
             the LBS-ADV message."
```



```
        REFERENCE
            "Subclause 6.3.2.3.59"
        ::= { wmanIf2mBsNeighborAdv 5 }

wmanIf2mBsLbsAdvNeighborBsEntry OBJECT-TYPE
        SYNTAX      WmanIf2mBsLbsAdvNeighborBsEntry
        MAX-ACCESS  not-accessible
        STATUS      current
        DESCRIPTION
            "This table provides one row for each BS locaton that are
             broadcast in the LBS-ADV message."
        INDEX     { wmanIf2mBsLbsBsId }
        ::= { wmanIf2mBsLbsAdvNeighborBsTable 1 }

WmanIf2mBsLbsAdvNeighborBsEntry::= SEQUENCE {
        wmanIf2mBsLbsBsId                       WmanIf2mNbrBsId,
        wmanIf2mBsLongitudeLong                 WmanIf2mLocationUnits,
        wmanIf2mBsLatitudeLong                  WmanIf2mLocationUnits,
        wmanIf2mBsAttitudeLong                  WmanIf2mAttitude,
        wmanIf2mBsLongitudeShort                Integer32,
        wmanIf2mBsLatitudeShort                 Integer32,
        wmanIf2mBsAttitudeShort                 Integer32}

wmanIf2mBsLbsBsId OBJECT-TYPE
        SYNTAX      WmanIf2mNbrBsId
        MAX-ACCESS  read-create
        STATUS      current
        DESCRIPTION
            "The least significant 24 bits of the Base Station ID
             parameter in the DL-MAP message of the Serving BS or
             Neighbor BS."
        ::= { wmanIf2mBsLbsAdvNeighborBsEntry 1 }

wmanIf2mBsLongitudeLong OBJECT-TYPE
        SYNTAX      WmanIf2mLocationUnits
        MAX-ACCESS  read-create
        STATUS      current
        DESCRIPTION
            "The longetude of the absolute BS location in long format,
             as defined in RFC3825. It is represented as a 34 bit
             fixed-point 2's complement number, consisting of 9 bits of
             integer and 25 bits of fraction, and is normalized to
             within ± 180 degrees."
        ::= { wmanIf2mBsLbsAdvNeighborBsEntry 3 }

wmanIf2mBsLatitudeLong OBJECT-TYPE
        SYNTAX      WmanIf2mLocationUnits
        MAX-ACCESS  read-create
        STATUS      current
        DESCRIPTION
            "The latitude of the absolute BS location in long format, as
             defined in RFC3825. It is represented as a 34 bit
             fixed-point 2's complement number, consisting of 9 bits of
             integer and 25 bits of fraction, and is normalized to
```

```
             within ± 90 degrees."
        ::= { wmanIf2mBsLbsAdvNeighborBsEntry 2 }

wmanIf2mBsAttitudeLong OBJECT-TYPE
        SYNTAX      WmanIf2mAttitude
        MAX-ACCESS  read-create
        STATUS      current
        DESCRIPTION
            "The attitude of the absolute BS location in long format, as
             defined in RFC3825. It is represented as a 30 bit
             fixed-point 2's complement number with 22 bits of integer
             and 8 bits of fraction."
        ::= { wmanIf2mBsLbsAdvNeighborBsEntry 4 }

wmanIf2mBsLongitudeShort OBJECT-TYPE
        SYNTAX      Integer32
        UNITS       "1 / 2^-15 degree"
        MAX-ACCESS  read-create
        STATUS      current
        DESCRIPTION
            "The longitude of the absolute BS location in short format.
             It is expressed as 2-15 part of a degree, using 2's
             complement notation to express negative (West) values."
        ::= { wmanIf2mBsLbsAdvNeighborBsEntry 5 }

wmanIf2mBsLatitudeShort OBJECT-TYPE
        SYNTAX      Integer32
        UNITS       "1 / 2^-16 degree"
        MAX-ACCESS  read-create
        STATUS      current
        DESCRIPTION
            "The latitude of the absolute BS location in short format.
             It is expressed as 2-16 part of a degree, using 2's
             complement notation to express negative (South) values."
        ::= { wmanIf2mBsLbsAdvNeighborBsEntry 6 }

wmanIf2mBsAttitudeShort OBJECT-TYPE
        SYNTAX      Integer32
        UNITS       "Meters"
        MAX-ACCESS  read-create
        STATUS      current
        DESCRIPTION
            "The attitude of the absolute BS location in short format.
             It is is expressed in meters above sea level using 2's
             complement notation to express negative (below sea level)
             values."
        ::= { wmanIf2mBsLbsAdvNeighborBsEntry 7 }

wmanIf2mBsPaging OBJECT IDENTIFIER ::= { wmanIf2mBsCm 4 }

--
-- wmanIf2mBsPagingAdvertizementTable
--
wmanIf2mBsPagingAdvertizementTable OBJECT-TYPE
```



```
        SYNTAX      SEQUENCE OF WmanIf2mBsPagingAdvertizementEntry
        MAX-ACCESS  not-accessible
        STATUS      current
        DESCRIPTION
            "This table contains the attributes that BS broadcasts in
             the MOB_PAG-ADV message."
        REFERENCE
            "Subclause 6.3.2.3.51"
        ::= { wmanIf2mBsPaging 1 }

wmanIf2mBsPagingAdvertizementEntry OBJECT-TYPE
        SYNTAX      WmanIf2mBsPagingAdvertizementEntry
        MAX-ACCESS  not-accessible
        STATUS      current
        DESCRIPTION
            ""
        INDEX     { ifIndex }
        ::= { wmanIf2mBsPagingAdvertizementTable 1 }

WmanIf2mBsPagingAdvertizementEntry ::= SEQUENCE {
        wmanIf2mBsPagingGroupListIndex          Integer32,
        wmanIf2mBsPagingRspWindow               Integer32,
        wmanIf2mBsPagingAdvRowStatus            RowStatus}

wmanIf2mBsPagingGroupListIndex OBJECT-TYPE
        SYNTAX      Integer32 (0 .. 65535)
        MAX-ACCESS  read-create
        STATUS      current
        DESCRIPTION
            "wmanIf2mBsPagingGroupListIndex maps to
             wmanIf2mBsPagingGroupListId in wmanIf2mBsPagingGroupsTable
             , and is used to identify the list of paging group IDs."
        ::= { wmanIf2mBsPagingAdvertizementEntry 1 }

wmanIf2mBsPagingRspWindow OBJECT-TYPE
        SYNTAX      Integer32 (0 .. 255)
        UNITS       "Frames"
        MAX-ACCESS  read-create
        STATUS      current
        DESCRIPTION
            "OFDMA-PHY specific parameter used to indicate the time
             window during which the MS shall transmit the CDMA code at
             the transmission opportunity assigned in the CDMA code and
             transmission opportunity assignment TLV. The start of the
             window is the next frame after receiving the MOB_PAG-ADV."
        REFERENCE
            "Subclause 11.17.2"
        ::= { wmanIf2mBsPagingAdvertizementEntry 2 }

wmanIf2mBsPagingAdvRowStatus OBJECT-TYPE
        SYNTAX          RowStatus
        MAX-ACCESS      read-create
        STATUS          current
        DESCRIPTION
```

```
            "This object is used to ensure that the write, create,
             delete operation to multiple columns is guaranteed to be
             treated as atomic operation by agent."
        ::= { wmanIf2mBsPagingAdvertizementEntry 3 }

wmanIf2mBsMsPagedTable OBJECT-TYPE
        SYNTAX      SEQUENCE OF WmanIf2mBsMsPagedEntry
        MAX-ACCESS  not-accessible
        STATUS      current
        DESCRIPTION
            "This table contains the MSs that are paged in the
             MOB_PAG-ADV message."
        REFERENCE
            "Subclause 6.3.2.3.51"
        ::= { wmanIf2mBsPaging 2 }

wmanIf2mBsMsPagedEntry OBJECT-TYPE
        SYNTAX      WmanIf2mBsMsPagedEntry
        MAX-ACCESS  not-accessible
        STATUS      current
        DESCRIPTION
            ""
        INDEX     { wmanIf2mBsSsMacAddress }
        ::= { wmanIf2mBsMsPagedTable 1 }

WmanIf2mBsMsPagedEntry ::= SEQUENCE {
        wmanIf2mBsSsMacAddrHash                 WmanIf2mSsMacAddrHash,
        wmanIf2mBsPagingActionCode              WmanIf2mPagingAction,
        wmanIf2mBsCdmaCode                      Integer32,
        wmanIf2mBsTransmitOpportunity           Integer32}

wmanIf2mBsSsMacAddrHash OBJECT-TYPE
        SYNTAX      WmanIf2mSsMacAddrHash
        MAX-ACCESS  read-only
        STATUS      current
        DESCRIPTION
            "The hash is obtained by computing a CRC24 on the MS 48-bit
             MAC address. The polynomial for the calculation is
             0x1864CFB"
        ::= { wmanIf2mBsMsPagedEntry 1 }

wmanIf2mBsPagingActionCode OBJECT-TYPE
        SYNTAX      WmanIf2mPagingAction
        MAX-ACCESS  read-only
        STATUS      current
        DESCRIPTION
            "Paging action instruction to MS."
        ::= { wmanIf2mBsMsPagedEntry 2 }

wmanIf2mBsCdmaCode OBJECT-TYPE
        SYNTAX      Integer32 (0 .. 255)
        MAX-ACCESS  read-only
        STATUS      current
        DESCRIPTION
```



```
            "OFDMA-PHY specific parameter used to indicate CDMA code
             and assigned to one or more MSs being paged in this
             message. One CDMA code assignment in the TLV corresponds
             to one MS paged. If wmanIf2mBsPagingActionCode is 'No
             Action Required', then it should return 0."
        REFERENCE
            "Subclause 11.17.1"
        ::= { wmanIf2mBsMsPagedEntry 3 }

wmanIf2mBsTransmitOpportunity OBJECT-TYPE
        SYNTAX      Integer32 (0 .. 65535)
        MAX-ACCESS  read-only
        STATUS      current
        DESCRIPTION
            "OFDMA-PHY specific parameter used to indicate transmission
             opportunity assigned to one or more MSs being paged in this
             message. One transmission opportunity assignment in the TLV
             corresponds to one MS paged. If wmanIf2mBsPagingActionCode
             is 'No Action Required', then it should return 0."
        REFERENCE
            "Subclause 11.17.1"
        ::= { wmanIf2mBsMsPagedEntry 4 }

wmanIf2mBsPagingGroupsTable OBJECT-TYPE
        SYNTAX      SEQUENCE OF WmanIf2mBsPagingGroupsEntry
        MAX-ACCESS  not-accessible
        STATUS      current
        DESCRIPTION
            "This table contains paging group IDs that BS can broadcast
             in the MOB_PAG-ADV message."
        REFERENCE
            "Subclause 6.3.2.3.51 and Table 569"
        ::= { wmanIf2mBsPaging 3 }

wmanIf2mBsPagingGroupsEntry OBJECT-TYPE
        SYNTAX      WmanIf2mBsPagingGroupsEntry
        MAX-ACCESS  not-accessible
        STATUS      current
        DESCRIPTION
            "Each entry contains a paging group ID. If multiple paging
             group IDs are to be formed in a list that will be
             broadcast by a BS, these paging group IDs should be
             identified by the same wmanIf2mBsPagingGroupListId value."
        INDEX     { wmanIf2mBsPagingGroupListId,
                    wmanIf2mBsPagingGroupId }
        ::= { wmanIf2mBsPagingGroupsTable 1 }

WmanIf2mBsPagingGroupsEntry ::= SEQUENCE {
        wmanIf2mBsPagingGroupListId             Integer32,
        wmanIf2mBsPagingGroupId                 Integer32,
        wmanIf2mBsPagingGroupsRowStatus         RowStatus}

wmanIf2mBsPagingGroupListId OBJECT-TYPE
        SYNTAX      Integer32 (0 .. 65535)
```

```
        MAX-ACCESS  not-accessible
        STATUS      current
        DESCRIPTION
            "The index to the wmanIf2mBsPagingGroupsTable."
        ::= { wmanIf2mBsPagingGroupsEntry 1 }

wmanIf2mBsPagingGroupId OBJECT-TYPE
        SYNTAX      Integer32 (0 .. 65535)
        MAX-ACCESS  not-accessible
        STATUS      current
        DESCRIPTION
            "This field indicates the ID of the paging group."
        ::= { wmanIf2mBsPagingGroupsEntry 2 }

wmanIf2mBsPagingGroupsRowStatus OBJECT-TYPE
        SYNTAX          RowStatus
        MAX-ACCESS      read-create
        STATUS          current
        DESCRIPTION
            "This object is used to ensure that the write, create,
             delete operation to multiple columns is guaranteed to be
             treated as atomic operation by agent."
        ::= { wmanIf2mBsPagingGroupsEntry 3 }


wmanIf2mBsServiceFlow OBJECT IDENTIFIER ::= { wmanIf2mBsCm 5 }

wmanIf2mBsServiceFlowTable OBJECT-TYPE
        SYNTAX      SEQUENCE OF WmanIf2mBsServiceFlowEntry
        MAX-ACCESS  not-accessible
        STATUS      current
        DESCRIPTION
            "This table contains the service flow database. When an SS
             first registers at the BS, the BS should download the
             SS' service flow profile (e.g. QoS parameter set and
             classification rules) from the home AAA server.

             For fixed or normadic SS, its service flow profile will
             not be changed in the entire duration of the session.

             For portable or mobile SS, when the SS handoffs to another
             BS, as part of the context transfer, the serving BS should
             transfer service flow profile to the target BS. After the
             handoff, the old serving BS shall change the
             wmanIf2mBsServiceFlowState of the service flows, previously
             used by the SS to 'inactive'.

             The BS may cleanup wmanIf2mBsServiceFlowTable periodically,
             by removing those entries with wmanIf2mBsServiceFlowState
             = 'inactive'."
        REFERENCE
            "Subclause 6.3.14"
        ::= { wmanIf2mBsServiceFlow 1 }
```



```
wmanIf2mBsServiceFlowEntry OBJECT-TYPE
        SYNTAX      WmanIf2mBsServiceFlowEntry
        MAX-ACCESS  not-accessible
        STATUS      current
        DESCRIPTION
            "This table provides one row for each service flow. It
             supports both unicast and multicast service flows:
             Unicast - a SS (wmanIf2mBsSsMacAddress) may contain
                       multiple service flows (wmanIf2mBsSsSfId)
             Multicast - a service flow (wmanIf2mBsSsSfId) may be
                         multicast to multiple SS
                         (wmanIf2mBsSsMacAddress)"
        INDEX     { ifIndex,
                    wmanIf2mBsSsMacAddress,
                    wmanIf2mBsSsSfId }
        ::= { wmanIf2mBsServiceFlowTable 1 }

WmanIf2mBsServiceFlowEntry ::= SEQUENCE {
        wmanIf2mBsSsMacAddress                  MacAddress,
        wmanIf2mBsServiceFlowDirection          WmanIf2TcSfDirection,
        wmanIf2mBsProvisionedGlobalServiceClass WmanIf2TcGlobalSrvClass,
        wmanIf2mBsAdmittedGlobalServiceClass    WmanIf2TcGlobalSrvClass,
        wmanIf2mBsActiveGlobalServiceClass      WmanIf2TcGlobalSrvClass,
        wmanIf2mBsProvisionedQoSProfileIndex    Integer32,
        wmanIf2mBsAdmittedQoSProfileIndex       Integer32,
        wmanIf2mBsActiveQoSProfileIndex         Integer32,
        wmanIf2mBsArqAttributeIndex             Integer32,
        wmanIf2mBsServiceFlowState              WmanIf2TcSfState,
        wmanIf2mBsCid                           Integer32,
        wmanIf2mBsSfCsSpecification             WmanIf2TcCsType,
        wmanIf2mBsSfReqTxPolicy                 WmanIf2TcReqTxPolicy,
        wmanIf2mBsSfTargetSaid                  Integer32,
        wmanIf2mBsSfEstablishTime               TimeStamp,
        wmanIf2mBsSfTerminateTime               TimeStamp,
        wmanIf2mBsSfFixedVsVariableSdu          WmanIf2TcSduType,
        wmanIf2mBsSfFragmentSeqNumType          WmanIf2TcFsnType,
        wmanIf2mBsSfMbsService                  WmanIf2TcMbsType}

wmanIf2mBsSsMacAddress OBJECT-TYPE
        SYNTAX      MacAddress
        MAX-ACCESS  not-accessible
        STATUS      current
        DESCRIPTION
            "The MAC address of the SS that the service flow is
             associated with."
        ::= { wmanIf2mBsServiceFlowEntry 1 }

wmanIf2mBsServiceFlowDirection OBJECT-TYPE
        SYNTAX      WmanIf2TcSfDirection
        MAX-ACCESS  read-only
        STATUS      current
        DESCRIPTION
            "An attribute indicating the direction of a service flow."
        ::= { wmanIf2mBsServiceFlowEntry 2 }
```

```
wmanIf2mBsProvisionedGlobalServiceClass OBJECT-TYPE
        SYNTAX      WmanIf2TcGlobalSrvClass
        MAX-ACCESS  read-only
        STATUS      current
        DESCRIPTION
            "This object defines the ProvisionedQoSParamSet for this
             service flow. When '0' is returned from reading this object
             , it means either no global service class is defined, or
             its Qos profile may be defined in
             wmanIf2mBsProvisionedQoSProfileIndex."
        REFERENCE
            "Subclause 6.3.14.4.1 Table 185"
        ::= { wmanIf2mBsServiceFlowEntry 3 }

wmanIf2mBsAdmittedGlobalServiceClass OBJECT-TYPE
        SYNTAX      WmanIf2TcGlobalSrvClass
        MAX-ACCESS  read-only
        STATUS      current
        DESCRIPTION
            "This object defines the AdmittededQoSParamSet for this
             service flow. When '0' is returned from reading this object
             , it means either no global service class is defined, or
             its Qos profile may be defined in
             wmanIf2mBsAdmittedQoSProfileIndex. AdmittededQoSParamSet is
             a subset of ProvisionedQoSParamSet."
        REFERENCE
            "Subclause 6.3.14.4.1 Table 185"
        ::= { wmanIf2mBsServiceFlowEntry 4 }

wmanIf2mBsActiveGlobalServiceClass OBJECT-TYPE
        SYNTAX      WmanIf2TcGlobalSrvClass
        MAX-ACCESS  read-only
        STATUS      current
        DESCRIPTION
            "This object defines the ActiveQoSParamSet for this service
             flow. When '0' is returned from reading this object, it
             means either no global service class is defined, or its Qos
             profile may be defined in wmanIf2mBsActiveQoSProfileIndex.
             ActiveQoSParamSet is a subset of AdmittededQoSParamSet."
        REFERENCE
            "Subclause 6.3.14.4.1 Table 185"
        ::= { wmanIf2mBsServiceFlowEntry 5 }

wmanIf2mBsProvisionedQoSProfileIndex OBJECT-TYPE
        SYNTAX      Integer32 (1 .. 65535)
        MAX-ACCESS  read-only
        STATUS      current
        DESCRIPTION
            "This index points to an entry in wmanIf2mBsQoSProfileTable
             that defines the ProvisionedQoSParamSet of a service flow.
             If WmanIf2TcSfState = 'provisioned', then
             ProvisionedQoSParamSet is the QoS profile for this service
             flow. When '0' is returned from reading this object, it
```



```
             means the QoS profile either is not defined, or is defined
             in wmanIf2mBsProvisionedQoSProfileIndex."
        REFERENCE
            "Subclause 6.3.13 and 6.3.14"
        ::= { wmanIf2mBsServiceFlowEntry 6 }

wmanIf2mBsAdmittedQoSProfileIndex OBJECT-TYPE
        SYNTAX      Integer32 (1 .. 65535)
        MAX-ACCESS  read-only
        STATUS      current
        DESCRIPTION
            "This index points to an entry in wmanIf2mBsQoSProfileTable
             that defines the AdmittedQoSParamSet of a service flow. If
             WmanIf2TcSfState = 'admitted', then AdmittedQoSParamSet is
             the QoS profile for this service flow. When '0' is returned
             from reading this object, it means the QoS profile either
             is not defined, or is defined in
             wmanIf2mBsAdmittedQoSProfileIndex. AdmittededQoSParamSet is
             a subset of ProvisionedQoSParamSet."
        REFERENCE
            "Subclause 6.3.13 and 6.3.14"
        ::= { wmanIf2mBsServiceFlowEntry 7 }

wmanIf2mBsActiveQoSProfileIndex OBJECT-TYPE
        SYNTAX      Integer32 (1 .. 65535)
        MAX-ACCESS  read-only
        STATUS      current
        DESCRIPTION
            "This index points to an entry in wmanIf2mBsQoSProfileTable
             that defines the ActiveQoSParamSet of a service flow. If
             WmanIf2TcSfState = 'active', then ActiveQoSParamSet is the
             QoS profile for this service flow. When '0' is returned
             from reading this object, it means the QoS profile either
             is not defined, or is defined in
             wmanIf2mBsActiveQoSProfileIndex. ActiveQoSParamSet is a
             subset of AdmittedQoSParamSet."
        REFERENCE
            "Subclause 6.3.13 and 6.3.14"
        ::= { wmanIf2mBsServiceFlowEntry 8 }

wmanIf2mBsArqAttributeIndex OBJECT-TYPE
        SYNTAX      Integer32 (1 .. 65535)
        MAX-ACCESS  read-only
        STATUS      current
        DESCRIPTION
            "This index points to an entry in
             wmanIf2mBsArqAttributeTable that defines the ARQ
             attributes for a service flow. When '0' is returned from
             reading this object, it means the ARQ attributes are not
             defined for this service flow."
        REFERENCE
            "Subclause 11.13.17"
        ::= { wmanIf2mBsServiceFlowEntry 9 }
```

```
wmanIf2mBsServiceFlowState OBJECT-TYPE
        SYNTAX      WmanIf2TcSfState
        MAX-ACCESS  read-only
        STATUS      current
        DESCRIPTION
            "wmanIf2mBsServiceFlowState determines the state of a
             service flow."
        REFERENCE
            "Subclause 6.3.14.2"
        ::= { wmanIf2mBsServiceFlowEntry 10 }

wmanIf2mBsCid OBJECT-TYPE
        SYNTAX      Integer32 (0 .. 65535)
        MAX-ACCESS  read-only
        STATUS      current
        DESCRIPTION
            "A 16 bit channel identifier points to the connection being
             created by DSA for this service flow. When '0' is returned
             from reading this object, it means no CID has been assigned
             to this service flow yet."
        ::= { wmanIf2mBsServiceFlowEntry 11 }

wmanIf2mBsSfCsSpecification OBJECT-TYPE
        SYNTAX      WmanIf2TcCsType
        MAX-ACCESS  read-only
        STATUS      current
        DESCRIPTION
            "This parameter specifies the convergence sublayer
             encapsulation mode."
        REFERENCE
            "Subclause 11.13.18.1"
        ::= { wmanIf2mBsServiceFlowEntry 12 }

wmanIf2mBsSfReqTxPolicy OBJECT-TYPE
        SYNTAX      WmanIf2TcReqTxPolicy
        MAX-ACCESS  read-only
        STATUS      current
        DESCRIPTION
            "The value of this parameter provides the capability to
             specify certain attributes for the associated service flow.
             An attribute is enabled by setting the corresponding bit
             position to 1."
        REFERENCE
            "Subclause 11.13.11"
        ::= { wmanIf2mBsServiceFlowEntry 13 }

wmanIf2mBsSfTargetSaid OBJECT-TYPE
        SYNTAX      Integer32 (0 .. 65535)
        MAX-ACCESS  read-only
        STATUS      current
        DESCRIPTION
            "The target SAID parameter indicates the SAID onto which the
             service flow being set up shall be mapped."
        REFERENCE
```



```
            "Subclause 11.13.16"
        ::= { wmanIf2mBsServiceFlowEntry 14 }

wmanIf2mBsSfEstablishTime OBJECT-TYPE
        SYNTAX      TimeStamp
        MAX-ACCESS  read-only
        STATUS      current
        DESCRIPTION
            "Indicates the date and time when the service flow is
             established that means wmanIf2mBsServiceFlowState is
             either in 'provisioned', 'admitted', or 'active' state."
        ::= { wmanIf2mBsServiceFlowEntry 15 }

wmanIf2mBsSfTerminateTime OBJECT-TYPE
        SYNTAX      TimeStamp
        MAX-ACCESS  read-only
        STATUS      current
        DESCRIPTION
            "Indicates the date and time when the service flow is
             terminated that means wmanIf2mBsServiceFlowState is
             in 'inactive' state."
        ::= { wmanIf2mBsServiceFlowEntry 16 }

wmanIf2mBsSfFixedVsVariableSdu OBJECT-TYPE
        SYNTAX      WmanIf2TcSduType
        MAX-ACCESS  read-only
        STATUS      current
        DESCRIPTION
            "The value of this parameter specifies whether the SDUs on
             the service flow are variable-length (0) or fixed-length
             (1). The parameter is used only if packing is on for the
             service flow. The default value is 0, i.e.,variable-length
             SDUs."
        REFERENCE
            "Subclause 11.13.14"
        DEFVAL      { variableLength }
        ::= { wmanIf2mBsServiceFlowEntry 17 }

wmanIf2mBsSfFragmentSeqNumType OBJECT-TYPE
        SYNTAX      WmanIf2TcFsnType
        MAX-ACCESS  read-only
        STATUS      current
        DESCRIPTION
            "The value of this parameter indicates the size of the FSN
             for the connection that is being setup.
                '0' indicates 3 bits FSN
                '1' indicates 11 bit FSN"
        REFERENCE
            "Subclause 11.13.20"
        DEFVAL      { elevenBits }
        ::= { wmanIf2mBsServiceFlowEntry 18 }

wmanIf2mBsSfMbsService OBJECT-TYPE
        SYNTAX      WmanIf2TcMbsType
```

```
        MAX-ACCESS  read-only
        STATUS      current
        DESCRIPTION
            "The value of this parameter indicates whether the MBS
             service is being requested or provided for a connection"
        REFERENCE
            "Subclause 11.13.21"
        ::= { wmanIf2mBsServiceFlowEntry 19 }

wmanIf2mBsClassifierRuleTable OBJECT-TYPE
        SYNTAX      SEQUENCE OF WmanIf2mBsClassifierRuleEntry
        MAX-ACCESS  not-accessible
        STATUS      current
        DESCRIPTION
            "This table contains packet classifier rules associated
             with service flows."
        ::= { wmanIf2mBsServiceFlow 2 }

wmanIf2mBsClassifierRuleEntry OBJECT-TYPE
        SYNTAX      WmanIf2mBsClassifierRuleEntry
        MAX-ACCESS  not-accessible
        STATUS      current
        DESCRIPTION
            "This table provides one row for each packet classifier rule
             ."
        INDEX     { ifIndex,
                    wmanIf2mBsSsMacAddress,
                    wmanIf2mBsSsSfId,
                    wmanIf2mBsClassifierRuleId }
        ::= { wmanIf2mBsClassifierRuleTable 1 }

WmanIf2mBsClassifierRuleEntry::= SEQUENCE {
        wmanIf2mBsClassifierRuleId              Integer32,
        wmanIf2mBsClassifierRulePriority        Integer32,
        wmanIf2mBsClassifierRuleIpProtocol      Integer32,
        wmanIf2mBsClassifierRuleIpSrcAddr       InetAddress,
        wmanIf2mBsClassifierRuleIpSrcMask       InetAddress,
        wmanIf2mBsClassifierRuleIpDestAddr      InetAddress,
        wmanIf2mBsClassifierRuleIpDestMask      InetAddress,
        wmanIf2mBsClassifierRuleSrcPortStart    Integer32,
        wmanIf2mBsClassifierRuleSrcPortEnd      Integer32,
        wmanIf2mBsClassifierRuleDestPortStart   Integer32,
        wmanIf2mBsClassifierRuleDestPortEnd     Integer32,
        wmanIf2mBsClassifierRuleDestMacAddr     MacAddress,
        wmanIf2mBsClassifierRuleDestMacMask     MacAddress,
        wmanIf2mBsClassifierRuleSrcMacAddr      MacAddress,
        wmanIf2mBsClassifierRuleSrcMacMask      MacAddress,
        wmanIf2mBsClassifierRuleEnetType        WmanIf2TcEthernetType,
        wmanIf2mBsClassifierRuleEnetProtocol    Integer32,
        wmanIf2mBsClassifierRuleUserPriLow      Integer32,
        wmanIf2mBsClassifierRuleUserPriHigh     Integer32,
        wmanIf2mBsClassifierRuleVlanId          Integer32,
        wmanIf2mBsClassifierRuleAssociatedPhsi  Integer32,
     wmanIf2mBsClassifierRuleIpv6FlowLabel  WmanIf2TcIpv6FlowLabel,
```



```
        wmanIf2mBsClassifierRuleAction          WmanIf2TcActionRule,
        wmanIf2mBsClassifierIpTypeOfService     WmanIf2TcIpTypOfServ,
      wmanIf2mBsClassifierRuleBitMap       WmanIf2TcClassifierMap,
        wmanIf2mBsClassifierRulePkts            Counter64}

wmanIf2mBsClassifierRuleId  OBJECT-TYPE
        SYNTAX      Integer32 (0 .. 65535)
        MAX-ACCESS  not-accessible
        STATUS      current
        DESCRIPTION
            "An index is assigned to each classifier in the classifiers
             table"
        REFERENCE
            "Subclause 11.13.18.3.3.14"
        ::= { wmanIf2mBsClassifierRuleEntry 1 }

wmanIf2mBsClassifierRulePriority OBJECT-TYPE
        SYNTAX      Integer32 (0 .. 255)
        MAX-ACCESS  read-only
        STATUS      current
        DESCRIPTION
            "The value specifies the order of evaluation of the
             classifiers. The higher the value the higher the priority.
             The value of 0 is used as default in provisioned service
             flows classifiers. The default value of 64 is used for
             dynamic service flow classifiers. If the referenced
             parameter is not present in a classifier, this object
             reports the default value as defined above"
        REFERENCE
            "Subclause 11.13.18.3.3.1"
        DEFVAL      { 0 }
        ::= { wmanIf2mBsClassifierRuleEntry 2 }

wmanIf2mBsClassifierRuleIpProtocol OBJECT-TYPE
        SYNTAX      Integer32 (0 .. 255)
        MAX-ACCESS  read-only
        STATUS      current
        DESCRIPTION
            "This object indicates the value of the IP Protocol field
             required for IP packets to match this rule. If the
             referenced parameter is not present in a classifier, this
             object reports the value of 0."
        REFERENCE
            "Subclause 11.13.18.3.3.3"
        ::= { wmanIf2mBsClassifierRuleEntry 3 }

wmanIf2mBsClassifierRuleIpSrcAddr OBJECT-TYPE
        SYNTAX      InetAddress
        MAX-ACCESS  read-only
        STATUS      current
        DESCRIPTION
            "This object specifies the value of the IP Source Address
             required for packets to match this rule. An IP packet
             matches the rule when the packet ip source address bitwise
```

```
             ANDed with the wmanIf2mBsClassifierRuleIpSrcMask value
             equals the wmanIf2mBsClassifierRuleIpSrcAddr value.
             If the referenced parameter is not present in a classifier
             , this object reports the value of 0.0.0.0."
        REFERENCE
            "Subclause 11.13.18.3.3.4"
        ::= { wmanIf2mBsClassifierRuleEntry 4 }

wmanIf2mBsClassifierRuleIpSrcMask OBJECT-TYPE
        SYNTAX      InetAddress
        MAX-ACCESS  read-only
        STATUS      current
        DESCRIPTION
            "This object specifies which bits of a packet's IP Source
             Address that are compared to match this rule. An IP packet
             matches the rule when the packet source address bitwise
             ANDed with the
             wmanIf2mBsClassifierRuleIpSrcMask value equals the
             wmanIf2mBsClassifierRuleIpSrcAddr value.
             If the referenced parameter is not present in a classifier
             , this object reports the value of 0.0.0.0."
        REFERENCE
            "Subclause 11.13.18.3.3.4"
        ::= { wmanIf2mBsClassifierRuleEntry 5 }

wmanIf2mBsClassifierRuleIpDestAddr OBJECT-TYPE
        SYNTAX      InetAddress
        MAX-ACCESS  read-only
        STATUS      current
        DESCRIPTION
            "This object specifies the value of the IP Destination
             Address required for packets to match this rule. An IP
             packet matches the rule when the packet IP destination
             address bitwise ANDed with the
             wmanIf2mBsClassifierRuleIpDestMask value equals the
             wmanIf2mBsClassifierRuleIpDestAddr value.
             If the referenced parameter is not present in a
             classifier, this object reports the value of 0.0.0.0."
        REFERENCE
            "Subclause 11.13.18.3.3.5"
        ::= { wmanIf2mBsClassifierRuleEntry 6 }

wmanIf2mBsClassifierRuleIpDestMask OBJECT-TYPE
        SYNTAX      InetAddress
        MAX-ACCESS  read-only
        STATUS      current
        DESCRIPTION
            "This object specifies which bits of a packet's IP
             Destination Address that are compared to match this rule.
             An IP packet matches the rule when the packet destination
             address bitwise ANDed with the
             wmanIf2mBsClassifierRuleIpDestMask value equals the
             wmanIf2mBsClassifierRuleIpDestAddr value.
             If the referenced parameter is not present in a classifier
```



```
             , this object reports the value of 0.0.0.0."
        REFERENCE
            "Subclause 11.13.18.3.3.5"
        ::= { wmanIf2mBsClassifierRuleEntry 7 }

wmanIf2mBsClassifierRuleSrcPortStart OBJECT-TYPE
        SYNTAX      Integer32 (0 .. 65535)
        MAX-ACCESS  read-only
        STATUS      current
        DESCRIPTION
             "This object specifies the low end inclusive range of
              TCP/UDP source port numbers to which a packet is compared
              . This object is irrelevant for non-TCP/UDP IP packets.
              If the referenced parameter is not present in a
              classifier, this object reports the value of 0."
        REFERENCE
            "Subclause 11.13.18.3.3.6"
        ::= { wmanIf2mBsClassifierRuleEntry 8 }

wmanIf2mBsClassifierRuleSrcPortEnd OBJECT-TYPE
        SYNTAX      Integer32 (0 .. 65535)
        MAX-ACCESS  read-only
        STATUS      current
        DESCRIPTION
            "This object specifies the high end inclusive range of
             TCP/UDP source port numbers to which a packet is compared.
             This object is irrelevant for non-TCP/UDP IP packets.
             If the referenced parameter is not present in a classifier,
             this object reports the value of 65535."
        REFERENCE
            "Subclause 11.13.18.3.3.6"
        ::= { wmanIf2mBsClassifierRuleEntry 9 }

wmanIf2mBsClassifierRuleDestPortStart OBJECT-TYPE
        SYNTAX      Integer32 (0 .. 65535)
        MAX-ACCESS  read-only
        STATUS      current
        DESCRIPTION
            "This object specifies the low end inclusive range of
             TCP/UDP destination port numbers to which a packet is
             compared. If the referenced parameter is not present in a
             classifier, this object reports the value of 0."
        REFERENCE
            "Subclause 11.13.18.3.3.7"
        ::= { wmanIf2mBsClassifierRuleEntry 10 }

wmanIf2mBsClassifierRuleDestPortEnd OBJECT-TYPE
        SYNTAX      Integer32 (0 .. 65535)
        MAX-ACCESS  read-only
        STATUS      current
        DESCRIPTION
            "This object specifies the high end inclusive range of
             TCP/UDP destination port numbers to which a packet is
             compared. If the referenced parameter is not present
```

```
             in a classifier, this object reports the value of
             65535."
        REFERENCE
            "Subclause 11.13.18.3.3.7"
        ::= { wmanIf2mBsClassifierRuleEntry 11 }

wmanIf2mBsClassifierRuleDestMacAddr OBJECT-TYPE
        SYNTAX      MacAddress
        MAX-ACCESS  read-only
        STATUS      current
        DESCRIPTION
            "An Ethernet packet matches an entry when its destination
             MAC address bitwise ANDed with
             wmanIf2mBsClassifierRuleDestMacMask equals the value of
             wmanIf2mBsClassifierRuleDestMacAddr. If the referenced
             parameter is not present in a classifier, this object
             reports the value of '000000000000'H."
        REFERENCE
            "Subclause 11.13.18.3.3.8"
        ::= { wmanIf2mBsClassifierRuleEntry 12 }

wmanIf2mBsClassifierRuleDestMacMask OBJECT-TYPE
        SYNTAX      MacAddress
        MAX-ACCESS  read-only
        STATUS      current
        DESCRIPTION
            "An Ethernet packet matches an entry when its destination
             MAC address bitwise ANDed with
             wmanIf2mBsClassifierRuleDestMacMask equals the value of
             wmanIf2mBsClassifierRuleDestMacAddr. If the referenced
             parameter is not present in a classifier, this object
             reports the value of '000000000000'H."
        REFERENCE
            "Subclause 11.13.18.3.3.8"
        ::= { wmanIf2mBsClassifierRuleEntry 13 }

wmanIf2mBsClassifierRuleSrcMacAddr OBJECT-TYPE
        SYNTAX      MacAddress
        MAX-ACCESS  read-only
        STATUS      current
        DESCRIPTION
            "An Ethernet packet matches this entry when its source MAC
             address  bitwise ANDed with
             wmanIf2mBsClassifierRuleSrcMacMask equals the value of
             wmanIf2mBsClassifierRuleSrcMacAddr. If the referenced
             parameter is not present in a classifier, this object
             reports the value of '000000000000'H."
        REFERENCE
            "Subclause 11.13.18.3.3.9"
        ::= { wmanIf2mBsClassifierRuleEntry 14 }

wmanIf2mBsClassifierRuleSrcMacMask OBJECT-TYPE
        SYNTAX      MacAddress
        MAX-ACCESS  read-only
```



```
        STATUS      current
        DESCRIPTION
            "An Ethernet packet matches an entry when its destination
             MAC address bitwise ANDed with
             wmanIf2mBsClassifierRuleSrcMacMask equals the value of
             wmanIf2mBsClassifierRuleSrcMacAddr. If the referenced
             parameter is not present in a classifier, this object
             reports the value of '000000000000'H."
        REFERENCE
            "Subclause 11.13.18.3.3.9"
        ::= { wmanIf2mBsClassifierRuleEntry 15 }

wmanIf2mBsClassifierRuleEnetType OBJECT-TYPE
        SYNTAX      WmanIf2TcEthernetType
        MAX-ACCESS  read-only
        STATUS      current
        DESCRIPTION
            "This object indicates the format of the layer 3 protocol
             id in the Ethernet packet. A value of none(0) means that
             the rule does not use the layer 3 protocol type as a
             matching criteria. A value of ethertype(1) means that the
             rule applies only to frames which contains an EtherType
             value. Ethertype values are contained in packets using
             the Dec-Intel-Xerox (DIX) encapsulation or the RFC1042
             Sub-Network Access Protocol (SNAP) encapsulation formats.
             A value of dsap(2) means that the rule applies only to
             frames using the IEEE802.3 encapsulation format with a
             Destination Service Access Point (DSAP) other than 0xAA
             (which is reserved for SNAP). If the Ethernet frame
             contains an 802.1P/Q Tag header (i.e. EtherType 0x8100),
             this object applies to the embedded EtherType field within
             the 802.1P/Q header. If the referenced parameter is not
             present in a classifier, this object reports the value of
             0."
        REFERENCE
            "Subclause 11.13.18.3.3.10"
        ::= { wmanIf2mBsClassifierRuleEntry 16 }

wmanIf2mBsClassifierRuleEnetProtocol OBJECT-TYPE
        SYNTAX      Integer32 (0..65535)
        MAX-ACCESS  read-only
        STATUS      current
        DESCRIPTION
            "If wmanIf2mBsClassifierRuleEnetType is none(0), this
             object is ignored when considering whether a packet matches
             the current rule. If wmanIf2mBsClassifierRuleEnetType is
             ethertype(1), this object gives the 16-bit value of the
             EtherType that the packet must match in order to match the
             rule. If wmanIf2mBsClassifierRuleEnetType is dsap(2), the
             lower 8 bits of this object's value must match the DSAP
             byte of the packet in order to match the rule.
             If the Ethernet frame contains an 802.1P/Q Tag header
             (i.e. EtherType 0x8100), this object applies to the
             embedded EtherType field within the 802.1P/Q header.
```

```
             If the referenced parameter is not present in the
             classifier, the value of this object is reported as 0."
        REFERENCE
            "Subclause 11.13.18.3.3.10"
        ::= { wmanIf2mBsClassifierRuleEntry 17 }

wmanIf2mBsClassifierRuleUserPriLow OBJECT-TYPE
        SYNTAX      Integer32 (0..7)
        MAX-ACCESS  read-only
        STATUS      current
        DESCRIPTION
            "This object applies only to Ethernet frames using the
             802.1P/Q tag header (indicated with EtherType 0x8100).
             Such frames include a 16-bit Tag that contains a 3 bit
             Priority field and a 12 bit VLAN number.
             Tagged Ethernet packets must have a 3-bit Priority field
             within the range of wmanIf2mBsClassifierRulePriLow and
             wmanIf2mBsClassifierRulePriHigh in order to match this
             rule.
             If the referenced parameter is not present in the
             classifier, the value of this object is reported as 0."
        REFERENCE
            "Subclause 11.13.18.3.3.11"
        ::= { wmanIf2mBsClassifierRuleEntry 18 }

wmanIf2mBsClassifierRuleUserPriHigh OBJECT-TYPE
        SYNTAX      Integer32 (0..7)
        MAX-ACCESS  read-only
        STATUS      current
        DESCRIPTION
            "This object applies only to Ethernet frames using the
            802.1P/Q tag header (indicated with EtherType 0x8100).
            Such frames include a 16-bit Tag that contains a 3 bit
            Priority field and a 12 bit VLAN number.
            Tagged Ethernet packets must have a 3-bit Priority
            field within the range of wmanIf2mBsClassifierRulePriLow
            and wmanIf2mBsClassifierRulePriHigh in order to match
            this rule.
            If the referenced parameter is not present in the
            classifier, the value of this object is reported as 7."
        REFERENCE
            "Subclause 11.13.18.3.3.11"
        ::= { wmanIf2mBsClassifierRuleEntry 19 }

wmanIf2mBsClassifierRuleVlanId OBJECT-TYPE
        SYNTAX      Integer32 (0..4095)
        MAX-ACCESS  read-only
        STATUS      current
        DESCRIPTION
            "This object applies only to Ethernet frames using the
             802.1P/Q tag header.
             If this object's value is nonzero, tagged packets must
             have a VLAN Identifier that matches the value in order
             to match the rule.
```



```
             Only the least significant 12 bits of this object's
             value are valid.
             If the referenced parameter is not present in the
             classifier, the value of this object is reported as 0."
        REFERENCE
            "Subclause 11.13.18.3.3.12"
        ::= { wmanIf2mBsClassifierRuleEntry 20 }

wmanIf2mBsClassifierRuleAssociatedPhsi OBJECT-TYPE
        SYNTAX      Integer32 (1..255)
        MAX-ACCESS  read-only
        STATUS      current
        DESCRIPTION
            "The Associated PHSI has a value between 1 and 255, which
             shall mirror the PHSI value of a PHS rule. This object
             provide index to wmanIf2mBsPhsRuleTable. Packets matching
             the Packet Classification Rule containing the Associated
             PHSI parameter shall undergo PHS according to the
             corresponding PHS rule. A value '0' indicates that no PHS
             rule is associated with this classifier rule."
        REFERENCE
            "Subclause 11.13.18.3.3.13"
        ::= { wmanIf2mBsClassifierRuleEntry 21 }

wmanIf2mBsClassifierRuleIpv6FlowLabel OBJECT-TYPE
        SYNTAX      WmanIf2TcIpv6FlowLabel
        MAX-ACCESS  read-only
        STATUS      current
        DESCRIPTION
            "The value of this field specifies the matching values for
             the IPv6 Flow label field."
        REFERENCE
            "Subclause 11.13.18.3.3.16"
        ::= { wmanIf2mBsClassifierRuleEntry 22 }

wmanIf2mBsClassifierRuleAction OBJECT-TYPE
        SYNTAX      WmanIf2TcActionRule
        MAX-ACCESS  read-only
        STATUS      current
        DESCRIPTION
            "The value of this field specifies an action associate with
             the classifier rule. If this classification action rule
             exists, its action shall be applied on the packets that
             match this classifier rule."
        REFERENCE
            "Subclause 11.13.18.3.3.17"
        ::= { wmanIf2mBsClassifierRuleEntry 23 }

wmanIf2mBsClassifierIpTypeOfService OBJECT-TYPE
        SYNTAX      WmanIf2TcIpTypOfServ
        MAX-ACCESS  read-only
        STATUS      current
        DESCRIPTION
            "The value of this TLV specifies the matching parameters for
```

```
             the IP Type of Service (TOS) octet. The 6 MSBs shall be set
             to a Differentiated Service Codepoint (DSCP), as specified
             by RFC 2474,"
        REFERENCE
            "Subclause 11.13.18.3.3.18"
        ::= { wmanIf2mBsClassifierRuleEntry 24 }

wmanIf2mBsClassifierRuleBitMap OBJECT-TYPE
        SYNTAX      WmanIf2TcClassifierMap
        MAX-ACCESS  read-only
        STATUS      current
        DESCRIPTION
            "This object indicates which parameter encodings were
             actually present in the entry. A bit set to '1' indicates
             the corresponding classifier encoding is present, and '0'
             means otherwise"
        ::= { wmanIf2mBsClassifierRuleEntry 25 }

wmanIf2mBsClassifierRulePkts OBJECT-TYPE
        SYNTAX      Counter64
        MAX-ACCESS  read-only
        STATUS      current
        DESCRIPTION
            "This object counts the number of packets that have
             been classified using this entry."
        ::= { wmanIf2mBsClassifierRuleEntry 26 }

wmanIf2mBsPhsRuleTable OBJECT-TYPE
        SYNTAX      SEQUENCE OF WmanIf2mBsPhsRuleEntry
        MAX-ACCESS  not-accessible
        STATUS      current
        DESCRIPTION
            "This table contains PHS rule dictionary entries. Each
             entry contains the data of the header to be suppressed
             along with its identification - PHSI. The classifier
             uniquely maps packets to its associated PHS Rule. The
             receiving entity uses the CID and the PHSI to restore the
             PHSF. Once a PHSF has been assigned to a PHSI, it shall
             not be changed. To change the value of a PHSF on a
             service flow, a new PHS rule shall be defined, the old
             rule is removed from the service flow, and the new rule
             is added. When all classification rules associated with
             the PHS rule are deleted, then the PHS rule shall also be
             deleted."
        REFERENCE
            "Subclause 5.2.3"
        ::= { wmanIf2mBsServiceFlow 3 }

wmanIf2mBsPhsRuleEntry OBJECT-TYPE
        SYNTAX      WmanIf2mBsPhsRuleEntry
        MAX-ACCESS  not-accessible
        STATUS      current
        DESCRIPTION
            "This table provides one row for each PHS rule created
```



```
             dynamically by the BS and SS on a given service flow. The
             PHS rule is defined by the pair (PHSS, PHSM) for each
             distinct header data."
        INDEX     { ifIndex,
                    wmanIf2mBsSsMacAddress,
                    wmanIf2mBsSsSfId,
                    wmanIf2mBsPhsRuleId }
        ::= { wmanIf2mBsPhsRuleTable 1 }

WmanIf2mBsPhsRuleEntry::= SEQUENCE {
        wmanIf2mBsPhsRuleId                     Integer32,
        wmanIf2mBsPhsRulePhsField               OCTET STRING,
        wmanIf2mBsPhsRulePhsMask                OCTET STRING,
        wmanIf2mBsPhsRulePhsSize                Integer32,
        wmanIf2mBsPhsRulePhsVerify              WmanIf2TcPhsRuleVerify}

wmanIf2mBsPhsRuleId OBJECT-TYPE
        SYNTAX      Integer32 (1 .. 255)
        MAX-ACCESS  not-accessible
        STATUS      current
        DESCRIPTION
            "The PHSI (PHS Index) has a value between 1 and 255, which
             uniquely references the suppressed byte string. The index
             is unique per service flow. The uplink and downlink PHSI
             values are independent of each other."
        REFERENCE
            "Subclause 11.13.18.3.5.1"
        ::= { wmanIf2mBsPhsRuleEntry 1 }

wmanIf2mBsPhsRulePhsField OBJECT-TYPE
        SYNTAX      OCTET STRING (SIZE(0..65535))
        MAX-ACCESS  read-only
        STATUS      current
        DESCRIPTION
            "The PHSF (PHS Field) is a string of bytes containing the
             header information to be suppressed by the sending CS and
             reconstructed by the receiving CS. The most significant
             byte of the string corresponds to the first byte of the
             CS-SDU."
        REFERENCE
            "Subclause 11.13.18.3.5.2"
        ::= { wmanIf2mBsPhsRuleEntry 2 }

wmanIf2mBsPhsRulePhsMask OBJECT-TYPE
        SYNTAX      OCTET STRING (SIZE(0..65535))
        MAX-ACCESS  read-only
        STATUS      current
        DESCRIPTION
            "The PHSM An 8-bit mask that indicates which bytes in the
             PHS Field (PHSF) to suppress and which bytes to not
             suppress. The PHSM allows fields, such as sequence numbers
             or checksums (which vary in value), to be excluded from
             suppression with the constant bytes around them suppressed.
             It is encodded as follows:
```

```
             bit 0:
                0 = don't suppress the 1st byte of the suppression field
                1 = suppress first byte of the suppression field
             bit 1:
                0 = don't suppress the 2nd byte of the suppression field
                1 = suppress second byte of the suppression field
             bit x:
                0 = don't suppress the (x+1) byte of the suppression
                    field
                1 = suppress (x+1) byte of the suppression field
             where the length of the octet string is ceiling
             (wmanIf2mBsPhsRulePhsSize/8)."
        REFERENCE
            "Subclause 11.13.18.3.5.3"
        ::= { wmanIf2mBsPhsRuleEntry 3 }

wmanIf2mBsPhsRulePhsSize OBJECT-TYPE
        SYNTAX      Integer32 (0..255)
        UNITS       "byte"
        MAX-ACCESS  read-only
        STATUS      current
        DESCRIPTION
            "The value of this field - PHSS is the total number of bytes
             in the header to be suppressed and then restored in a
             service flow that uses PHS."
        REFERENCE
            "Subclause 11.13.18.3.5.4"
        DEFVAL      {0}
        ::= { wmanIf2mBsPhsRuleEntry 4 }

wmanIf2mBsPhsRulePhsVerify OBJECT-TYPE
        SYNTAX      WmanIf2TcPhsRuleVerify
        MAX-ACCESS  read-only
        STATUS      current
        DESCRIPTION
            "The value of this field indicates to the sending entity
             whether or not the packet header contents are to be
             verified prior to performing suppression."
        DEFVAL      { phsVerifyEnable }
        ::= { wmanIf2mBsPhsRuleEntry 5 }

wmanIf2mBsQoSProfileTable OBJECT-TYPE
        SYNTAX      SEQUENCE OF WmanIf2mBsQoSProfileEntry
        MAX-ACCESS  not-accessible
        STATUS      current
        DESCRIPTION
            "This table contains QoS profiles that are associated with
             service flows or CIDs via the wmanIf2mBsQoSProfileIndex.

             The following table shows the required parameters for
             different UL grant scheduling type.
                 0   - not required
                 1   - required
                 0-1 - optional
```



```
             QoS Parameters                BE  ertPS  UGS  rtPS  nrtPS
             -------------------------------------------------------
             Traffic priority              0-1  0-1    0    0-1   0-1
             Max sustained traffic rate    0-1  0-1    1    0-1   0-1
             Min reserved traffic rate      0    1    0-1    1     1
             Minimum traffic burst          0   0-1    0    0-1   0-1
             Tolerated jitter               0   0-1    1     0     0
             Maximum latency                0    1     1     1     0
             Unsolicited Grant Interval     0    1     1     0     0
             SDU size                       0    0    0-1    0     0
             Unsolicited Polling Interval   0    0     0     1     0"
        REFERENCE
            "Subclause 6.3.14.4"
        ::= { wmanIf2mBsServiceFlow 4 }

wmanIf2mBsQoSProfileEntry OBJECT-TYPE
        SYNTAX      WmanIf2mBsQoSProfileEntry
        MAX-ACCESS  not-accessible
        STATUS      current
        DESCRIPTION
            "This table provides one row for each QoS parameter Set."
        INDEX     { ifIndex, wmanIf2mBsQoSProfileIndex }
        ::= { wmanIf2mBsQoSProfileTable 1 }

WmanIf2mBsQoSProfileEntry ::= SEQUENCE {
        wmanIf2mBsQoSProfileIndex               Integer32,
        wmanIf2mBsQosServiceClassName           OCTET STRING,
        wmanIf2mBsQosUlGrantScheduleType        WmanIf2TcSchedulingType,
        wmanIf2mBsQosTrafficPriority            Integer32,
        wmanIf2mBsQosMaximumSustainedRate       Unsigned32,
        wmanIf2mBsQosMinimumReservedRate        Unsigned32,
        wmanIf2mBsQosMaximumTrafficBurst        Unsigned32,
        wmanIf2mBsQosToleratedJitter            Unsigned32,
        wmanIf2mBsQosMaxLatency                 Unsigned32,
        wmanIf2mBsQosUnsolicitedGrantInterval   Unsigned32,
        wmanIf2mBsQosSduSize                    Unsigned32,
        wmanIf2mBsQosUnsolicitedPollInterval    Unsigned32}

wmanIf2mBsQoSProfileIndex OBJECT-TYPE
        SYNTAX      Integer32 (1 .. 65535)
        MAX-ACCESS  not-accessible
        STATUS      current
        DESCRIPTION
            "The index value which uniquely identifies an entry in the
             wmanIf2mBsQoSProfileTable"
        ::= { wmanIf2mBsQoSProfileEntry 1 }

wmanIf2mBsQosServiceClassName  OBJECT-TYPE
        SYNTAX      OCTET STRING (SIZE(2..128))
        MAX-ACCESS  read-only
        STATUS      current
        DESCRIPTION
            "This object is the Null-terminated string of ASCII
```

```
             characters. It refers to a predefined BS service
             configuration to be used for a service flow."
        REFERENCE
            "Subclause 11.13.3"
        ::= { wmanIf2mBsQoSProfileEntry 2 }

wmanIf2mBsQosUlGrantScheduleType OBJECT-TYPE
        SYNTAX      WmanIf2TcSchedulingType
        MAX-ACCESS  read-only
        STATUS      current
        DESCRIPTION
            "This parameter specifies the Uplink grant scheduling type
             that shall be enabled for the associated uplink service
             flow upstream service flow. If the parameter is not
             present in the corresponding 802.16 QOS Parameter Set of
             an upstream service flow, the default value is assumed."
        REFERENCE
            "Subclause 11.13.10"
        DEFVAL    { bestEffort }
        ::= { wmanIf2mBsQoSProfileEntry 3 }

wmanIf2mBsQosTrafficPriority OBJECT-TYPE
        SYNTAX      Integer32 (0..7)
        MAX-ACCESS  read-only
        STATUS      current
        DESCRIPTION
            "The value of this parameter specifies the priority assigned
             to a service flow. For uplink service flows, the BS should
             use this parameter when determining precedence in request
             service and grant generation, Higher numbers indicate
             higher priority"
        REFERENCE
            "Subclause 11.13.5"
        ::= { wmanIf2mBsQoSProfileEntry 4 }

wmanIf2mBsQosMaximumSustainedRate OBJECT-TYPE
        SYNTAX      Unsigned32
        UNITS       "bps"
        MAX-ACCESS  read-only
        STATUS      current
        DESCRIPTION
            "This parameter defines the peak information rate of the
             service. The rate is expressed in bits per second and
             pertains to the SDUs at the input to the Convergence
             Sublayer."
        REFERENCE
            "Subclause 11.13.6"
        ::= { wmanIf2mBsQoSProfileEntry 5 }

wmanIf2mBsQosMinimumReservedRate OBJECT-TYPE
        SYNTAX      Unsigned32
        UNITS       "bps"
        MAX-ACCESS  read-only
        STATUS      current
```



```
        DESCRIPTION
            "This parameter specifies the minimum rate reserved for this
             service flow. It specifies the minimum amount of data to be
             transported on behalf of the service flow when averaged
             over time."
        REFERENCE
            "Subclause 11.13.8"
        ::= { wmanIf2mBsQoSProfileEntry 6 }

wmanIf2mBsQosMaximumTrafficBurst OBJECT-TYPE
        SYNTAX      Unsigned32
        UNITS       "byte"
        MAX-ACCESS  read-only
        STATUS      current
        DESCRIPTION
            "This parameter defines the maximum burst size that must be
             accommodated for the service. It defines the maximum
             continuous burst the system should accommodate for the
             service assuming the service is not currently using any of
             its available resources."
        REFERENCE
            "Subclause 11.13.7"
        ::= { wmanIf2mBsQoSProfileEntry 7 }

wmanIf2mBsQosToleratedJitter OBJECT-TYPE
        SYNTAX      Unsigned32
        UNITS       "millisecond"
        MAX-ACCESS  read-only
        STATUS      current
        DESCRIPTION
            "This parameter defines the Maximum delay variation (jitter)
             for the connection."
        REFERENCE
            "Subclause 11.13.12"
        ::= { wmanIf2mBsQoSProfileEntry 8 }

wmanIf2mBsQosMaxLatency OBJECT-TYPE
        SYNTAX      Unsigned32
        UNITS       "millisecond"
        MAX-ACCESS  read-only
        STATUS      current
        DESCRIPTION
            "This parameter specifies the maximum latency between the
             ingress of a packet to the Convergence Sublayer and the
             forwarding of the SDU to its Air Interface."
        REFERENCE
            "Subclause 11.13.13"
        ::= { wmanIf2mBsQoSProfileEntry 9 }

wmanIf2mBsQosUnsolicitedGrantInterval OBJECT-TYPE
        SYNTAX      Unsigned32
        UNITS       "millisecond"
        MAX-ACCESS  read-only
        STATUS      current
```

```
        DESCRIPTION
            "This object specifies the nominal interval between
             successive data grant opportunities for a service flow."
        REFERENCE
            "Subclause 11.13.19"
        ::= { wmanIf2mBsQoSProfileEntry 10 }

wmanIf2mBsQosSduSize OBJECT-TYPE
        SYNTAX      Unsigned32
        UNITS       "byte"
        MAX-ACCESS  read-only
        STATUS      current
        DESCRIPTION
            "This parameter specifies the length of the SDU for a
             fixed-length SDU service flow. It is used only if packing
             is on and the service flow is indicated as carrying
             fixed-length SDUs. If this object is omitted in the QoS
             parameter set, it should return 0 that means the
             variable-length service flow."
        REFERENCE
            "Subclause 11.13.15"
        ::= { wmanIf2mBsQoSProfileEntry 11 }

wmanIf2mBsQosUnsolicitedPollInterval OBJECT-TYPE
        SYNTAX      Unsigned32
        UNITS       "millisecond"
        MAX-ACCESS  read-only
        STATUS      current
        DESCRIPTION
            "This object specifies the maximal nominal interval between
             successive polling grants opportunities for this Service
             Flow."
        REFERENCE
            "Subclause 11.13.20"
        ::= { wmanIf2mBsQoSProfileEntry 12 }

wmanIf2mBsArqAttributeTable OBJECT-TYPE
        SYNTAX      SEQUENCE OF WmanIf2mBsArqAttributeEntry
        MAX-ACCESS  not-accessible
        STATUS      current
        DESCRIPTION
            "This table contains ARQ parameters that are associated
             with the Service Flows."
        REFERENCE
            "Subclause 11.13.17"
        ::= { wmanIf2mBsServiceFlow 5 }

wmanIf2mBsArqAttributeEntry OBJECT-TYPE
        SYNTAX      WmanIf2mBsArqAttributeEntry
        MAX-ACCESS  not-accessible
        STATUS      current
        DESCRIPTION
            "This table provides one row for each created service flow
             for a given MacAddress."
```



```
        INDEX     { ifIndex, wmanIf2mBsArqIndex  }
        ::= { wmanIf2mBsArqAttributeTable 1 }

WmanIf2mBsArqAttributeEntry::= SEQUENCE {
        wmanIf2mBsArqIndex                      Integer32,
        wmanIf2mBsArqEnable                     TruthValue,
        wmanIf2mBsArqWindowSize                 Integer32,
        wmanIf2mBsArqTxRetryTimeout             Integer32,
        wmanIf2mBsArqRxRetryTimeout             Integer32,
        wmanIf2mBsArqBlockLifetime              Integer32,
        wmanIf2mBsArqSyncLossTimeout            Integer32,
        wmanIf2mBsArqDeliverInOrder             WmanIf2TcArqDelvInOrder,
        wmanIf2mBsArqRxPurgeTimeout             Integer32,
        wmanIf2mBsArqBlockSizeReq               WmanIf2TcArqBlockSize,
        wmanIf2mBsArqBlockSizeRsp               Integer32,
        wmanIf2mBsArqAckProcessingTime          Integer32}

wmanIf2mBsArqIndex OBJECT-TYPE
        SYNTAX      Integer32 ( 1 .. 65535)
        MAX-ACCESS  not-accessible
        STATUS      current
        DESCRIPTION
            "The index value which uniquely identifies an entry in the
             in the wmanIf2mBsArqAttributeTable."
        ::= { wmanIf2mBsArqAttributeEntry 1 }

wmanIf2mBsArqEnable OBJECT-TYPE
        SYNTAX      TruthValue
        MAX-ACCESS  read-only
        STATUS      current
        DESCRIPTION
            "True(1) ARQ enabling is requested for the connection."
        REFERENCE
            "Subclause 11.13.17.1"
        ::= { wmanIf2mBsArqAttributeEntry 2 }

wmanIf2mBsArqWindowSize OBJECT-TYPE
        SYNTAX    Integer32 (1 .. 1024)
        MAX-ACCESS  read-only
        STATUS      current
        DESCRIPTION
            "Indicates the maximum number of unacknowledged fragments
             at any time."
        REFERENCE
            "Subclause 11.13.18.2"
        ::= { wmanIf2mBsArqAttributeEntry 3 }

wmanIf2mBsArqTxRetryTimeout OBJECT-TYPE
        SYNTAX    Integer32 (0 .. 65535)
        UNITS    "100 us"
        MAX-ACCESS  read-only
        STATUS      current
        DESCRIPTION
            "Indicates transmitter delay, including sending (e.g., MAC
```

```
             PDUs) and receiving (e.g., ARQ feedback) delays and other
             implementation dependent processing delays. If the
             transmitter is the BS, it may include other delays such as
             scheduling and propagation delay."
        REFERENCE
            "Subclause 11.13.17.3"
        ::= { wmanIf2mBsArqAttributeEntry 4 }

wmanIf2mBsArqRxRetryTimeout OBJECT-TYPE
        SYNTAX    Integer32 (0 .. 65535)
        UNITS    "100 us"
        MAX-ACCESS  read-only
        STATUS      current
        DESCRIPTION
            "Indicates receiver delay, including receiving (e.g., MAC
             PDUs) and sending (e.g., ARQ feedback) delays and other
             implementation-dependent processing delays. If the
             receiver is the BS, it may include other delays such as
             scheduling and propagation delay."
        REFERENCE
            "Subclause 11.13.17.3"
        ::= { wmanIf2mBsArqAttributeEntry 5 }

wmanIf2mBsArqBlockLifetime OBJECT-TYPE
        SYNTAX    Integer32 (0 .. 65535)
        UNITS    "100 us"
        MAX-ACCESS  read-only
        STATUS      current
        DESCRIPTION
            "The maximum time interval an ARQ fragment will be managed
             by the transmitter ARQ machine, once initial transmission
             of the fragment has occured. If transmission or
             retransmission of the fragment is not acknowledged by the
             receiver before the time limit is reached, the fragment is
             discarded. A value of 0 means Infinite."
        REFERENCE
            "Subclause 11.13.17.4"
        ::= { wmanIf2mBsArqAttributeEntry 6 }

wmanIf2mBsArqSyncLossTimeout OBJECT-TYPE
        SYNTAX    Integer32 (0 .. 65535 )
        UNITS    "100 us"
        MAX-ACCESS  read-only
        STATUS      current
        DESCRIPTION
            "The maximum interval before declaring a loss of
             synchronization of the sender and receiver state machines.
             A value of 0 means Infinite."
        REFERENCE
            "Subclause 11.13.17.5"
        ::= { wmanIf2mBsArqAttributeEntry 7 }

wmanIf2mBsArqDeliverInOrder  OBJECT-TYPE
        SYNTAX      WmanIf2TcArqDelvInOrder
```



```
        MAX-ACCESS  read-only
        STATUS      current
        DESCRIPTION
            "Indicates whether or not data is to be delivered by the
             receiving MAC to its client application in the order in
             which data was handed off to the originating MAC."
        REFERENCE
            "Subclause 11.13.17.6"
        ::= { wmanIf2mBsArqAttributeEntry 8 }

wmanIf2mBsArqRxPurgeTimeout  OBJECT-TYPE
        SYNTAX    Integer32 (0 .. 65535)
        UNITS    "100 us"
        MAX-ACCESS  read-only
        STATUS      current
        DESCRIPTION
            "Indicates the time interval the ARQ window is advanced
             after a fragment is received. A value of 0 means
             Infinite."
        REFERENCE
            "Subclause 11.13.17.7"
        ::= { wmanIf2mBsArqAttributeEntry 9 }

wmanIf2mBsArqBlockSizeReq OBJECT-TYPE
        SYNTAX    WmanIf2TcArqBlockSize
        MAX-ACCESS  read-only
        STATUS      current
        DESCRIPTION
            "This value of this parameter specifies the size of an ARQ
             block included in DSA-REQ and RSG-REQ. This parameter shall
             be established by negotiation during the connection
             creation dialog."
        REFERENCE
            "Subclause 11.13.17.8"
        ::= { wmanIf2mBsArqAttributeEntry 10 }

wmanIf2mBsArqBlockSizeRsp OBJECT-TYPE
        SYNTAX    Integer32 (0 .. 15)
        MAX-ACCESS  read-only
        STATUS      current
        DESCRIPTION
            "This value of this parameter specifies the size of an ARQ
             block included in DSA-RSP and RSG-RSP.
             Bit 0-3: encoding for selected block size (P)
             Bit 4-7: set to 0
             where:
                The selected block size is equal to 2^(P+4), P<=6 and
                M<=N"
        REFERENCE
            "Subclause 11.13.17.8"
        ::= { wmanIf2mBsArqAttributeEntry 11 }

wmanIf2mBsArqAckProcessingTime OBJECT-TYPE
        SYNTAX    Integer32 (0 .. 255)
```

```
        UNITS       "millisecond"
        MAX-ACCESS  read-only
        STATUS      current
        DESCRIPTION
            "This parameter indicates the number of ms required by the
             ARQ receiver to process the received ARQ blocks and provide
             a valid ACK or NAK."
        REFERENCE
            "Subclause 11.13.17.9"
        ::= { wmanIf2mBsArqAttributeEntry 12 }

--
-- Mobile Station Sleep Mode Statistics Table
--
wmanIf2mBsSsSleepModeStatisticsTable OBJECT-TYPE
        SYNTAX      SEQUENCE OF   WmanIf2mBsSsSleepModeStatisticsEntry
        MAX-ACCESS  not-accessible
        STATUS      current
        DESCRIPTION
            "This table contains the sleep mode statistic for MS. This
             table shall be maintained as FIFO to store the sleep mode
             statistics over a period of time that is subject to
             implementation. This statistics information can be to
             monitor, fine tuning, or debugging the power saving
             performance of each MS. When the statistics entry for an
             MS reaches the limit, it wraps around to the beginning, and
             overwrites the oldest entry with the new entry. When the BS
             roams to a different BS, all entries associated with such
             MS will be deleted."
        REFERENCE
            "Subclause 6.3.21"
        ::= { wmanIf2mBsPm 1 }

wmanIf2mBsSsSleepModeStatisticsEntry OBJECT-TYPE
        SYNTAX      WmanIf2mBsSsSleepModeStatisticsEntry
        MAX-ACCESS  not-accessible
        STATUS      current
        DESCRIPTION
            "Each entry in the table contains the event of an MS
             entering the sleep mode. wmanIf2mBsSsStatisticsIndex is the
             index to sleep mode event entry in the table, and should be
             increased monotonically, and wraps around when it reaches
             the implementation specific limit. A time stamp is provided
             in each entry to indicate when the sleep mode event took
             place."
        INDEX     { ifIndex,
                    wmanIf2mBsSsMacAddress,
                    wmanIf2mBsSsCid,
                    wmanIf2mBsSsStatisticsIndex }
        ::= { wmanIf2mBsSsSleepModeStatisticsTable  1 }

WmanIf2mBsSsSleepModeStatisticsEntry ::= SEQUENCE {
        wmanIf2mBsSsStatisticsIndex            Unsigned32,
        wmanIf2mBsSsSleepWindowStarted         Unsigned32,
```



```
        wmanIf2mBsSsListeningWindowStarted      Unsigned32,
        wmanIf2mBsSsPendingMsdu                 Integer32,
        wmanIf2mBsSsSleepWindowTimeStamp        DateAndTime}

wmanIf2mBsSsStatisticsIndex OBJECT-TYPE
        SYNTAX      Unsigned32 (1 .. 4294967295)
        MAX-ACCESS  not-accessible
        STATUS      current
        DESCRIPTION
            "wmanIf2mBsSsStatisticsIndex identifies the entry in the
             table where the latest sleep mode event took place."
        ::= { wmanIf2mBsSsSleepModeStatisticsEntry 1 }

wmanIf2mBsSsSleepWindowStarted OBJECT-TYPE
        SYNTAX      Unsigned32 (1 .. 166777215)
        UNITS       "frame"
        MAX-ACCESS  read-only
        STATUS      current
        DESCRIPTION
            "wmanIf2mBsSsSleepWindowStarted identifies when the sleep
             mode is activated.
               wmanIf2mBsSsSleepWindowStarted = current frame number +
                                                Start_frame_number.
             The frame number is provided in the DL-MAP, and is
             incremented by 1 MOD 2^24 each frame."
        ::= { wmanIf2mBsSsSleepModeStatisticsEntry 2 }

wmanIf2mBsSsListeningWindowStarted OBJECT-TYPE
        SYNTAX      Unsigned32 (1 .. 166777215)
        UNITS       "frame"
        MAX-ACCESS  read-only
        STATUS      current
        DESCRIPTION
           "wmanIf2mBsSsListeningWindowStarted identifies when the sleep
             mode is deactivated.
               wmanIf2mBsSsListeningWindowStarted =
               wmanIf2mBsSsListeningWindowStarted + sleep window
             The frame number is provided in the DL-MAP, and is
             incremented by 1 MOD 2^24 each frame."
        ::= { wmanIf2mBsSsSleepModeStatisticsEntry 3 }

wmanIf2mBsSsPendingMsdu OBJECT-TYPE
        SYNTAX      Integer32
        MAX-ACCESS  read-only
        STATUS      current
        DESCRIPTION
            "Indicate the number of MAC SDU that are received from the
             network during the sleep window."
        ::= { wmanIf2mBsSsSleepModeStatisticsEntry 4 }

wmanIf2mBsSsSleepWindowTimeStamp OBJECT-TYPE
        SYNTAX      DateAndTime
        MAX-ACCESS  read-only
        STATUS      current
```

```
        DESCRIPTION
            "This is the time when sleep window is started in seconds.
             The definition of time is as in IETF RFC 868."
        ::= { wmanIf2mBsSsSleepModeStatisticsEntry 5 }

--
-- wmanIf2mBsMobileScanRequestTable
--
wmanIf2mBsMobileScanRequestTable OBJECT-TYPE
        SYNTAX      SEQUENCE OF WmanIf2mBsMobileScanRequestEntry
        MAX-ACCESS  not-accessible
        STATUS      current
        DESCRIPTION
            "This table contains the attributes that are sent in the
             MOB_SCN-REQ message."
        REFERENCE
            "Subclause 6.3.2.3.43"
        ::= { wmanIf2mBsPm 2 }

wmanIf2mBsMobileScanRequestEntry OBJECT-TYPE
        SYNTAX      WmanIf2mBsMobileScanRequestEntry
        MAX-ACCESS  not-accessible
        STATUS      current
        DESCRIPTION
            ""
        INDEX     { ifIndex, wmanIf2mBsSsMacAddress }
        ::= { wmanIf2mBsMobileScanRequestTable 1 }

WmanIf2mBsMobileScanRequestEntry ::= SEQUENCE {
        wmanIf2mBsScanReqDuration               Integer32,
        wmanIf2mBsScanReqInterleavingInterval   Integer32,
        wmanIf2mBsScanReqIteration              Integer32,
        wmanIf2mBsNumOfRecommendedBs            Integer32,
        wmanIf2mBsScanConfigChangeCount         Integer32}

wmanIf2mBsScanReqDuration OBJECT-TYPE
        SYNTAX      Integer32 (0 .. 255)
        UNITS       "frames"
        MAX-ACCESS  read-only
        STATUS      current
        DESCRIPTION
            "Duration of the requested scanning period."
        ::= { wmanIf2mBsMobileScanRequestEntry 1 }

wmanIf2mBsScanReqInterleavingInterval OBJECT-TYPE
        SYNTAX      Integer32 (0 .. 255)
        UNITS       "frames"
        MAX-ACCESS  read-only
        STATUS      current
        DESCRIPTION
            "The period of MS's Normal Operation which is interleaved
             between Scanning Durations."
        ::= { wmanIf2mBsMobileScanRequestEntry 2 }
```



```
wmanIf2mBsScanReqIteration OBJECT-TYPE
        SYNTAX      Integer32 (0 .. 255)
        UNITS       "frames"
        MAX-ACCESS  read-only
        STATUS      current
        DESCRIPTION
            "The requested number of iterating scanning interval by an
             MS."
        ::= { wmanIf2mBsMobileScanRequestEntry 3 }

wmanIf2mBsNumOfRecommendedBs OBJECT-TYPE
        SYNTAX      Integer32 (0 .. 255)
        MAX-ACCESS  read-only
        STATUS      current
        DESCRIPTION
            "Number of neighboring BS to be scanned or associated, which
             are included in MOB_NBR-ADV message."
        ::= { wmanIf2mBsMobileScanRequestEntry 4 }

wmanIf2mBsScanConfigChangeCount OBJECT-TYPE
        SYNTAX      Integer32 (0 .. 255)
        MAX-ACCESS  read-only
        STATUS      current
        DESCRIPTION
            "The value of Configuration Change Count in MOB_NBR-ADV
             message referred in order to compress neighbor BSID."
        ::= { wmanIf2mBsMobileScanRequestEntry 5 }

--
-- wmanIf2mBsMobileScanResponseTable
--
wmanIf2mBsMobileScanResponseTable OBJECT-TYPE
        SYNTAX      SEQUENCE OF WmanIf2mBsMobileScanResponseEntry
        MAX-ACCESS  not-accessible
        STATUS      current
        DESCRIPTION
            "This table contains the attributes that are sent in the
             MOB_SCN-RSP message."
        REFERENCE
            "Subclause 6.3.2.3.44"
        ::= { wmanIf2mBsPm 3 }

wmanIf2mBsMobileScanResponseEntry OBJECT-TYPE
        SYNTAX      WmanIf2mBsMobileScanResponseEntry
        MAX-ACCESS  not-accessible
        STATUS      current
        DESCRIPTION
            ""
        INDEX     { ifIndex, wmanIf2mBsSsMacAddress }
        ::= { wmanIf2mBsMobileScanResponseTable 1 }

WmanIf2mBsMobileScanResponseEntry ::= SEQUENCE {
        wmanIf2mBsScanRspDuration               Integer32,
        wmanIf2mBsScanRspInterleavingInterval   Integer32,
```

```
        wmanIf2mBsScanRspIteration              Integer32,
        wmanIf2mBsReportMode                    WmanIf2mReportMode,
        wmanIf2mBsReportPeriod                  Integer32,
        wmanIf2mBsReportMetric                  WmanIf2mReportMetric,
        wmanIf2mBsStartFrame                    Integer32}

wmanIf2mBsScanRspDuration OBJECT-TYPE
        SYNTAX      Integer32 (0 .. 255)
        UNITS       "frames"
        MAX-ACCESS  read-only
        STATUS      current
        DESCRIPTION
            "Duration where the MS may perform scanning or association
             for Available BSs. When MOB_SCN-RSP is sent in response to
             MOB_SCN-REQ, setting Scan duration to zero indicates the
             request for an allocation of scanning interval is denied."
        ::= { wmanIf2mBsMobileScanResponseEntry 1 }

wmanIf2mBsScanRspInterleavingInterval OBJECT-TYPE
        SYNTAX      Integer32 (0 .. 255)
        UNITS       "frames"
        MAX-ACCESS  read-only
        STATUS      current
        DESCRIPTION
            "The period interleaved between Scanning Intervals when MS
             shall perform Normal Operation."
        ::= { wmanIf2mBsMobileScanResponseEntry 2 }

wmanIf2mBsScanRspIteration OBJECT-TYPE
        SYNTAX      Integer32 (0 .. 255)
        UNITS       "frames"
        MAX-ACCESS  read-only
        STATUS      current
        DESCRIPTION
            "The number of iterating scanning interval."
        ::= { wmanIf2mBsMobileScanResponseEntry 3 }

wmanIf2mBsReportMode OBJECT-TYPE
        SYNTAX      WmanIf2mReportMode
        MAX-ACCESS  read-only
        STATUS      current
        DESCRIPTION
            "Action code for an MS's report of CINR measurement."
        ::= { wmanIf2mBsMobileScanResponseEntry 4 }

wmanIf2mBsReportPeriod OBJECT-TYPE
        SYNTAX      Integer32 (0 .. 255)
        MAX-ACCESS  read-only
        STATUS      current
        DESCRIPTION
            "The period of MS is report of CINR measurement when the MS
             is required to report the value periodically."
        ::= { wmanIf2mBsMobileScanResponseEntry 5 }
```



```
wmanIf2mBsReportMetric OBJECT-TYPE
        SYNTAX      WmanIf2mReportMetric
        MAX-ACCESS  read-only
        STATUS      current
        DESCRIPTION
            "Bitmap indicator of trigger metrics that the serving BS
             requests the MS to report."
        ::= { wmanIf2mBsMobileScanResponseEntry 6 }

wmanIf2mBsStartFrame OBJECT-TYPE
        SYNTAX      Integer32 (0 .. 15)
        MAX-ACCESS  read-only
        STATUS      current
        DESCRIPTION
            "Measured from the frame in which this message was received.
             A value of zero means that first Scanning Interval starts
             in the next frame."
        ::= { wmanIf2mBsMobileScanResponseEntry 7 }

--
-- wmanIf2mBsNeighborBsInfoTable
--
wmanIf2mBsNeighborBsInfoTable OBJECT-TYPE
        SYNTAX      SEQUENCE OF WmanIf2mBsNeighborBsInfoEntry
        MAX-ACCESS  not-accessible
        STATUS      current
        DESCRIPTION
            "This table contains the neighbor BS information that is
             sent in the MOB_SCN-RSP and MOB_SCN-REP messages."
        REFERENCE
            "Subclause 6.3.2.3.44 and 6.3.2.3.45"
        ::= { wmanIf2mBsPm 4 }

wmanIf2mBsNeighborBsInfoEntry OBJECT-TYPE
        SYNTAX      WmanIf2mBsNeighborBsInfoEntry
        MAX-ACCESS  not-accessible
        STATUS      current
        DESCRIPTION
            ""
        INDEX     { ifIndex,
                    wmanIf2mBsSsMacAddress,
                    wmanIf2mBsNeighbirBsIndex }
        ::= { wmanIf2mBsNeighborBsInfoTable 1 }

WmanIf2mBsNeighborBsInfoEntry ::= SEQUENCE {
        wmanIf2mBsNeighbirBsIndex               Integer32,
        wmanIf2mBsFullBsId                      WmanIf2TcBsIdType,
        wmanIf2mBsScanningType                  WmanIf2mScanType,
        wmanIf2mBsRendezvousTime                Integer32,
        wmanIf2mBsScanCdmaCode                  Integer32,
        wmanIf2mBsTxOpportunityOffset           Integer32,
        wmanIf2mBsCinrMean                      Integer32,
        wmanIf2mBsRssiMean                      Integer32,
        wmanIf2mBsRelativeDelay                 Integer32}
```

```
wmanIf2mBsNeighbirBsIndex OBJECT-TYPE
        SYNTAX      Integer32 (0 .. 65535)
        MAX-ACCESS  not-accessible
        STATUS      current
        DESCRIPTION
            "Index to the neighbor BS."
        ::= { wmanIf2mBsNeighborBsInfoEntry 1 }

wmanIf2mBsFullBsId OBJECT-TYPE
        SYNTAX      WmanIf2TcBsIdType
        MAX-ACCESS  read-only
        STATUS      current
        DESCRIPTION
            "This object contains the BS ID if full 48 bits BS ID is
             used to scan the neighbor BS. This object returns NULL if
             the Neighbor_BS_index as defined in MOB_SCN-RSP is used
             instead."
        ::= { wmanIf2mBsNeighborBsInfoEntry 2 }

wmanIf2mBsScanningType OBJECT-TYPE
        SYNTAX      WmanIf2mScanType
        MAX-ACCESS  read-only
        STATUS      current
        DESCRIPTION
            "Type of scanning or association used by the MS and
             coordinated by the Serving BS."
        ::= { wmanIf2mBsNeighborBsInfoEntry 3 }

wmanIf2mBsRendezvousTime OBJECT-TYPE
        SYNTAX      Integer32 (0 .. 255)
        UNITS       "frames"
        MAX-ACCESS  read-only
        STATUS      current
        DESCRIPTION
            "This is offset, measured in units of frame duration (of
             Serving BS), when the corresponding Recommended BS is
             expected to provide non-contention-based ranging
             opportunity for the MS."
        ::= { wmanIf2mBsNeighborBsInfoEntry 4 }

wmanIf2mBsScanCdmaCode OBJECT-TYPE
        SYNTAX      Integer32 (0 .. 255)
        MAX-ACCESS  read-only
        STATUS      current
        DESCRIPTION
            "A unique code assigned to the MS, to be used for
             association with the neighbor BS. Code is from the initial
             ranging codeset."
        ::= { wmanIf2mBsNeighborBsInfoEntry 5 }

wmanIf2mBsTxOpportunityOffset OBJECT-TYPE
        SYNTAX      Integer32 (0 .. 255)
        MAX-ACCESS  read-only
```



```
        STATUS      current
        DESCRIPTION
            "A unique transmission opportunity assigned to the MS, to be
             used for association with the Target BS in units of symbol
             duration."
        ::= { wmanIf2mBsNeighborBsInfoEntry 6 }

wmanIf2mBsCinrMean OBJECT-TYPE
        SYNTAX      Integer32 (0 .. 255)
        UNITS       "0.5 dB"
        MAX-ACCESS  read-only
        STATUS      current
        DESCRIPTION
            "The BS CINR mean parameter indicates the CINR measured by
             the MS from the particular BS. The value shall be
             interpreted as a signed byte with units of 0.5 dB. The
             measurement shall be performed on the subcarriers of the
             frame preamble that are active in the particular BS's
             segment and averaged over the measurement period."
        ::= { wmanIf2mBsNeighborBsInfoEntry 7 }

wmanIf2mBsRssiMean OBJECT-TYPE
        SYNTAX      Integer32 (0 .. 255)
        UNITS       "0.25 dB"
        MAX-ACCESS  read-only
        STATUS      current
        DESCRIPTION
            "The BS RSSI mean parameter indicates the Received Signal
             Strength measured by the MS from the particular BS. The
             value shall be interpreted as an unsigned byte with units
             of 0.25 dB."
        ::= { wmanIf2mBsNeighborBsInfoEntry 8 }

wmanIf2mBsRelativeDelay OBJECT-TYPE
        SYNTAX      Integer32 (0 .. 255)
        UNITS       "samples"
        MAX-ACCESS  read-only
        STATUS      current
        DESCRIPTION
            "This parameter indicates the delay of neighbor DL signals
             relative to the serving BS, as measured by the MS for the
             particular BS. The value shall be interpreted as a signed
             integer in units of samples."
        ::= { wmanIf2mBsNeighborBsInfoEntry 9 }

--
-- wmanIf2mBsDiversityBsInfoTable
--
wmanIf2mBsDiversityBsInfoTable OBJECT-TYPE
        SYNTAX      SEQUENCE OF WmanIf2mBsDiversityBsInfoEntry
        MAX-ACCESS  not-accessible
        STATUS      current
        DESCRIPTION
            "This table contains the diversity BS information that is
```

```
             sent in the MOB_SCN-REP messages."
        REFERENCE
            "Subclause 6.3.2.3.45"
        ::= { wmanIf2mBsPm 5 }

wmanIf2mBsDiversityBsInfoEntry OBJECT-TYPE
        SYNTAX      WmanIf2mBsDiversityBsInfoEntry
        MAX-ACCESS  not-accessible
        STATUS      current
        DESCRIPTION
            ""
        INDEX     { ifIndex,
                    wmanIf2mBsSsMacAddress,
                    wmanIf2mBsTempBsIndex }
        ::= { wmanIf2mBsDiversityBsInfoTable 1 }

WmanIf2mBsDiversityBsInfoEntry ::= SEQUENCE {
        wmanIf2mBsTempBsIndex                   Integer32,
        wmanIf2mBsFbssMdhoCinrMean              Integer32,
        wmanIf2mBsFbssMdhoRssiMean              Integer32,
        wmanIf2mBsFbssMdhoRelativeDelay         Integer32,
        wmanIf2mBsFbssMdhoRtd                   Integer32}

wmanIf2mBsTempBsIndex OBJECT-TYPE
        SYNTAX      Integer32 (0 .. 15)
        MAX-ACCESS  not-accessible
        STATUS      current
        DESCRIPTION
            "Diversity set member ID assigned to this BS. When the MS
             has an empty diversity set or FBSS/MDHO is not supported,
             Temp BSID shall be set to 0.."
        ::= { wmanIf2mBsDiversityBsInfoEntry 1 }

wmanIf2mBsFbssMdhoCinrMean OBJECT-TYPE
        SYNTAX      Integer32 (0 .. 255)
        UNITS       "0.5 dB"
        MAX-ACCESS  read-only
        STATUS      current
        DESCRIPTION
            "The BS CINR mean parameter indicates the CINR measured by
             the MS from the particular BS. The value shall be
             interpreted as a signed byte with units of 0.5 dB. The
             measurement shall be performed on the subcarriers of the
             frame preamble that are active in the particular BS's
             segment and averaged over the measurement period."
        ::= { wmanIf2mBsDiversityBsInfoEntry 2 }

wmanIf2mBsFbssMdhoRssiMean OBJECT-TYPE
        SYNTAX      Integer32 (0 .. 255)
        UNITS       "0.25 dB"
        MAX-ACCESS  read-only
        STATUS      current
        DESCRIPTION
            "The BS RSSI mean parameter indicates the Received Signal
```



```
             Strength measured by the MS from the particular BS. The
             value shall be interpreted as an unsigned byte with units
             of 0.25 dB."
        ::= { wmanIf2mBsDiversityBsInfoEntry 3 }

wmanIf2mBsFbssMdhoRelativeDelay OBJECT-TYPE
        SYNTAX      Integer32 (0 .. 255)
        UNITS       "samples"
        MAX-ACCESS  read-only
        STATUS      current
        DESCRIPTION
            "This parameter indicates the delay of neighbor DL signals
             relative to the serving BS, as measured by the MS for the
             particular BS. The value shall be interpreted as a signed
             integer in units of samples."
        ::= { wmanIf2mBsDiversityBsInfoEntry 4 }

wmanIf2mBsFbssMdhoRtd OBJECT-TYPE
        SYNTAX      Integer32 (0 .. 255)
        UNITS       "1/Fs"
        MAX-ACCESS  read-only
        STATUS      current
        DESCRIPTION
            "The BS RTD parameter indicates the round trip delay (RTD)
             measured by the MS from the serving BS. RTD can be given by
             the latest time advance taken by MS. The value shall be
             interpreted as an unsigned byte with units of 1/Fs (see
             10.3.4.3). This parameter shall be only measured on serving
             BS/anchor BS."
        ::= { wmanIf2mBsDiversityBsInfoEntry 5 }

--
-- Conformance Information
--
wmanIf2mBsConformance    OBJECT IDENTIFIER ::= {wmanIf2mBsMib 2}
wmanIf2mBsMibGroups      OBJECT IDENTIFIER ::= {wmanIf2mBsConformance 1}
wmanIf2mBsMibCompliances OBJECT IDENTIFIER ::= {wmanIf2mBsConformance 2}

-- compliance statements
wmanIf2mBsMibCompliance MODULE-COMPLIANCE
        STATUS      current
        DESCRIPTION
            "The compliance statement for devices that implement
             mobile Wireless MAN interfaces as defined in
             IEEE Std 802.16."

        MODULE          -- wmanIf2mBsMib

        -- conditionally mandatory group
        GROUP       wmanIf2mBsMibCmGroup
        DESCRIPTION
            "This group is mandatory for Base Station."

        -- conditionally mandatory group
```

```
        GROUP       wmanIf2mBsMibPowerSavingGroup
        DESCRIPTION
            "This group is mandatory for Base Station."

        -- conditionally mandatory group
        GROUP       wmanIf2mBsMibNeighborAdvGroup
        DESCRIPTION
            "This group is mandatory for Base Station."

        -- mandatory group
        GROUP       wmanIf2mBsMibPagingGroup
        DESCRIPTION
            "This group is mandatory for Base Station."

        -- conditionally mandatory group
        GROUP       wmanIf2mBsMibServieFlowGroup
        DESCRIPTION
            "This group is mandatory for Base Station implementaing the
             OFDM PHY."

        -- conditionally mandatory group
        GROUP       wmanIf2mBsMibSleepModeGroup
        DESCRIPTION
            "This group is mandatory for Base Station."

        ::= { wmanIf2mBsMibCompliances 1 }

wmanIf2mBsMibCmGroup     OBJECT-GROUP
        OBJECTS {-- BS Configuration
                 wmanIf2mBsMobNbrAdvInterval,
                 wmanIf2mBsAscAgingTimer,
                 wmanIf2mBsPagingRetryCount,
                 wmanIf2mBsModeSelectFeedbackProcTime,
                 wmanIf2mBsIdleModeSystemTimer,
                 wmanIf2mBsMgmtResourceHoldingTimer,
                 wmanIf2mBsDregCommandRetryCount,
                 wmanIf2mBsT46Timer,
                 wmanIf2mBsT47Timer,
                 wmanIf2mBsPagingInterval,
                 wmanIf2mBsT55Timer,
                 wmanIf2mBsMihMaxCycles,
                 wmanIf2mBs2ndMgmtDlQoSProfileIndex,
                 wmanIf2mBs2ndMgmtUlQoSProfileIndex,
                 wmanIf2mBsBasicCidDlQosProfileIndex,
                 wmanIf2mBsBasicCidUlQosProfileIndex,
                 wmanIf2mBsPrimaryCidDlQosProfileIndex,
                 wmanIf2mBsPrimaryCidUlQosProfileIndex,

                 -- Capability negotiation
                 wmanIf2mBsSsReqCapHandoverSupported,
                 wmanIf2mBsSsReqCapHoProcessTimer,
                 wmanIf2mBsSsReqCapMobilityFeature,
                 wmanIf2mBsSsReqCapSleepRecoveryTime,
                 wmanIf2mBsSsReqCapPreviousIpAddr,
```



```
wmanIf2mBsSsReqCapIdleModeTimeout,
wmanIf2mBsSsReqCapHoConnProcessTime,
wmanIf2mBsSsReqCapHoTekProcessTime,
wmanIf2mBsSsReqCapPowerSavingType,
wmanIf2mBsSsReqCapHoTrigMetric,
wmanIf2mBsSsReqCapAssociationType,
wmanIf2mBsSsReqCapNumOfPsClass,

wmanIf2mBsSsRspCapHandoverSupported,
wmanIf2mBsSsRspCapRetrainTime,
wmanIf2mBsSsRspCapHoProcessTimer,
wmanIf2mBsSsRspCapRetransmissionTimer,
wmanIf2mBsSsRspCapMobilityFeature,
wmanIf2mBsSsRspCapIdleModeTimeout,
wmanIf2mBsSsRspCapHoConnProcessTime,
wmanIf2mBsSsRspCapHoTekProcessTime,
wmanIf2mBsSsRspCapPowerSavingType,
wmanIf2mBsSsRspCapHoTrigMetric,
wmanIf2mBsSsRspCapAssociationType,
wmanIf2mBsSsRspCapNumOfPsClass,

wmanIf2mBsCapHandoverSupported,
wmanIf2mBsCapRetrainTime,
wmanIf2mBsCapHoProcessTimer,
wmanIf2mBsCapRetransmissionTimer,
wmanIf2mBsCapMobilityFeature,
wmanIf2mBsCapIdleModeTimeout,
wmanIf2mBsCapHoConnProcessTime,
wmanIf2mBsCapHoTekProcessTime,
wmanIf2mBsCapPowerSavingType,
wmanIf2mBsCapHoTrigMetric,
wmanIf2mBsCapAssociationType,
wmanIf2mBsCapNumOfPsClass,

wmanIf2mBsCapCfgHandoverSupported,
wmanIf2mBsCapCfgRetrainTime,
wmanIf2mBsCapCfgHoProcessTimer,
wmanIf2mBsCapCfgRetransmissionTimer,
wmanIf2mBsCapCfgMobilityFeature,
wmanIf2mBsCapCfgIdleModeTimeout,
wmanIf2mBsCapCfgHoConnProcessTime,
wmanIf2mBsCapCfgHoTekProcessTime,
wmanIf2mBsCapCfgPowerSavingType,
wmanIf2mBsCapCfgHoTrigMetric,
wmanIf2mBsCapCfgAssociationType,
wmanIf2mBsCapCfgNumOfPsClass,

-- CID update
wmanIf2mBsSsNewCid,
wmanIf2mBsSsNewSaid,
wmanIf2mBsSsOldSaid,

-- NSP
wmanIf2mBsNspIdentifier,
```

```
                wmanIf2mBsVerboseNspNameLength,
                wmanIf2mBsVerboseNspName,
                wmanIf2mBsNspRowStatus}
        STATUS       current
        DESCRIPTION
            "This group contains objects for Configuration Management."
        ::= { wmanIf2mBsMibGroups 1 }

wmanIf2mBsMibPowerSavingGroup     OBJECT-GROUP
        OBJECTS {-- Power saving mode
                wmanIf2mBsSsPowerSavingClassId,
                wmanIf2mBsSsStartFrameNumber,
                wmanIf2mBsSsPowerSavingClassType,
                wmanIf2mBsSsPsClassCidDirection,
                wmanIf2mBsSsTrafficTriggeredWakening,
                wmanIf2mBsSsInitialSleepWindow,
                wmanIf2mBsSsFinalSleepWindowBase,
                wmanIf2mBsSsFinalSleepWindowExponent,
                wmanIf2mBsSsListeningWindow,
                wmanIf2mBsSsPowerSavingMode,
                wmanIf2mBsSsSlpId,
                wmanIf2mBsSkipOptions,
                wmanIf2mBsOperatorId,
                wmanIf2mBsNumOfNeighbors,
                wmanIf2mBsConfigChangeCount}
        STATUS       current
        DESCRIPTION
            "This group contains objects for power saving mode."
        ::= { wmanIf2mBsMibGroups 2 }

wmanIf2mBsMibNeighborAdvGroup     OBJECT-GROUP
        OBJECTS {-- Neighbor Advertizement
                wmanIf2mBsNeighborBsId,
                wmanIf2mBsPhyProfileId,
                wmanIf2mBsFaIndex,
                wmanIf2mBsEirp,
                wmanIf2mBsPreampleSubchIndex,
                wmanIf2mBsHandoverProcOptimization,
                wmanIf2mBsSchedulingService,
                wmanIf2mBsChannelBandwidth,
                wmanIf2mBsFftSize,
                wmanIf2mBsCyclicPrefix,
                wmanIf2mBsFrameDurationCode,
                wmanIf2mBsMobilityFeatureSupported,
                wmanIf2mBsNrbBsPagingGroupListIndex,
                wmanIf2mBsNeighborAdvRowStatus,

                -- UCD
                wmanIf2mBsOfdmaCtBasedResvTimeout,
                wmanIf2mBsOfdmaUplinkCenterFreq,
                wmanIf2mBsOfdmaUlRadioResource,
                wmanIf2mBsOfdmaHandoverRangingStart,
                wmanIf2mBsOfdmaHandoverRangingEnd,
                wmanIf2mBsOfdmaUlAmcAlloPhyBandsBitmap,
```



```
wmanIf2mBsOfdmaInitRngCodes,
wmanIf2mBsOfdmaPeriodicRngCodes,
wmanIf2mBsOfdmaBWReqCodes,
wmanIf2mBsOfdmaPeriodRngBackoffStart,
wmanIf2mBsOfdmaPeriodRngBackoffEnd,
wmanIf2mBsOfdmaStartOfRngCodes,
wmanIf2mBsOfdmaPermutationBase,
wmanIf2mBsOfdmaULAllocSubchBitmap,
wmanIf2mBsOfdmaOptPermULAlocSubchBitmap,
wmanIf2mBsOfdmaBandAMCAllocThreshold,
wmanIf2mBsOfdmaBandAMCReleaseThreshold,
wmanIf2mBsOfdmaBandAMCAllocTimer,
wmanIf2mBsOfdmaBandAMCReleaseTimer,
wmanIf2mBsOfdmaBandStatRepMAXPeriod,
wmanIf2mBsOfdmaBandAMCRetryTimer,
wmanIf2mBsOfdmaSafetyChAllocThreshold,
wmanIf2mBsOfdmaSafetyChReleaseThreshold,
wmanIf2mBsOfdmaSafetyChAllocTimer,
wmanIf2mBsOfdmaSafetyChReleaseTimer,
wmanIf2mBsOfdmaBinStatusReportMaxPeriod ,
wmanIf2mBsOfdmaSafetyChRetryTimer,
wmanIf2mBsOfdmaHARQAckDelayDLBurst,
wmanIf2mBsOfdmaCqichBandAmcTransDelay,
wmanIf2mBsOfdmaMaxRetransmission,
wmanIf2mBsOfdmaNormalizedCnOverride,
wmanIf2mBsOfdmaSizeOfCqichId,
wmanIf2mBsOfdmaNormalizedCnValue,
wmanIf2mBsOfdmaNormalizedCnOverride2,
wmanIf2mBsOfdmaBandAmcEntryAvgCinr,
wmanIf2mBsOfdmaAasPreambleUpperBond,
wmanIf2mBsOfdmaAasPreambleLowerBond,
wmanIf2mBsOfdmaAasBeamSelectAllowed,
wmanIf2mBsOfdmaCqichIndicationFlag,
wmanIf2mBsOfdmaMsUpPowerAdjStep,
wmanIf2mBsOfdmaMsDownPowerAdjStep,
wmanIf2mBsOfdmaMinPowerOffsetAdj,
wmanIf2mBsOfdmaMaxPowerOffsetAdj,
wmanIf2mBsOfdmaHandoverRangingCodes,
wmanIf2mBsOfdmaInitialRangingInterval,
wmanIf2mBsOfdmaTxPowerReport,
wmanIf2mBsOfdmaNormalizedCnChSounding,
wmanIf2mBsOfdmaInitialRngBackoffStart,
wmanIf2mBsOfdmaInitialRngBackoffEnd,
wmanIf2mBsOfdmaBwRequestBackoffStart,
wmanIf2mBsOfdmaBwRequestBackoffEnd,
wmanIf2mBsOfdmaUlPuscSubChRotation,
wmanIf2mBsOfdmaRelPwrOffetUlHarqBurst,
wmanIf2mBsOfdmaRelPwrOffetUlMacMgmBurst,
wmanIf2mBsOfdmaUlInitialTxTiming,
wmanIf2mBsOfdmaUlPhyModeId,
wmanIf2mBsOfdmaFastFeedbackRegion,
wmanIf2mBsOfdmaHarqAckRegion,
wmanIf2mBsOfdmaRangingRegion,
wmanIf2mBsOfdmaSoundingRegion,
```

```
            wmanIf2mBsOfdmaMsTxPowerLimit,
            wmanIf2mBsOfdmaHfddGroupSwitchDelay,
            wmanIf2mBsOfdmaFrameOffset,
            wmanIf2mBsOfdmaNumOfPowerControlBits,
            wmanIf2mBsOfdmaFddDlInterGroupGap,
            wmanIf2mBsOfdmaFddPartitionChange,
            wmanIf2mBsOfdmaPhyDlPowerControlMode,
            wmanIf2mBsOfdmaTtgTtdOrHfddGroup1,
            wmanIf2mBsOfdmaTtgHfddGroup2,
            wmanIf2mBsOfdmaRtgTtdOrHfddGroup1,
            wmanIf2mBsOfdmaRtgHfddGroup2,
            wmanIf2mBsOfdmaTsuc1ActSubchannelBitmap,
            wmanIf2mBsOfdmaTsuc2ActSubchannelBitmap,
            wmanIf2mBsOfdmaCidDescriptor,
            wmanIf2mBsOfdmaUcdConfigChangeCount,

            -- DCD
            wmanIf2mBsOfdmaBsEIRP,
            wmanIf2mBsOfdmaChannelNumber,
            wmanIf2mBsOfdmaMaxEirp,
            wmanIf2mBsOfdmaDownlinkCenterFreq,
            wmanIf2mBsOfdmaBsId,
            wmanIf2mBsOfdmaMacVersion,
            wmanIf2mBsOfdmaDlRadioResource,
            wmanIf2mBsOfdmaHARQAackDelayULBurst,
            wmanIf2mBsOfdmaHarqZonePermutation,
            wmanIf2mBsOfdmaHMaxRetransmission,
            wmanIf2mBsOfdmaRssiCinrAvgParameter,
            wmanIf2mBsOfdmaDlAmcAlloPhyBandsBitmap,
            wmanIf2mBsOfdmaHandoverSupported,
            wmanIf2mBsOfdmaThresholdAddBsDivSet,
            wmanIf2mBsOfdmaThresholdDelBsDivSet,
            wmanIf2mBsOfdmaAsrSlotLength,
            wmanIf2mBsOfdmaAsrSwitchingPeriod,
            wmanIf2mBsOfdmaHysteresisMargin,
            wmanIf2mBsOfdmaTimeToTrigger,
            wmanIf2mBsOfdmaMihCapability,
            wmanIf2mBsOfdmaNspChangeCount,
            wmanIf2mBsOfdmaCellType,
            wmanIf2mBsOfdmaRestartCount,
            wmanIf2mBsOfdmaDcdConfigChangeCount,

            -- LBS
            wmanIf2mBsLbsBsId,
            wmanIf2mBsLongitudeLong,
            wmanIf2mBsLatitudeLong,
            wmanIf2mBsAttitudeLong,
            wmanIf2mBsLongitudeShort,
            wmanIf2mBsLatitudeShort,
            wmanIf2mBsAttitudeShort}
    STATUS       current
    DESCRIPTION
        "This group contains objects for neighbor advertizement."
    ::= { wmanIf2mBsMibGroups 3 }
```



```
wmanIf2mBsMibPagingGroup     OBJECT-GROUP
        OBJECTS {-- Paging
                 wmanIf2mBsPagingGroupListIndex,
                 wmanIf2mBsPagingRspWindow,
                 wmanIf2mBsPagingAdvRowStatus,
                 wmanIf2mBsSsMacAddrHash,
                 wmanIf2mBsPagingActionCode,
                 wmanIf2mBsCdmaCode,
                 wmanIf2mBsTransmitOpportunity,
                 wmanIf2mBsPagingGroupsRowStatus}
        STATUS       current
        DESCRIPTION
            "This group contains objects for paging."
        ::= { wmanIf2mBsMibGroups 4 }

wmanIf2mBsMibServieFlowGroup     OBJECT-GROUP
        OBJECTS {-- Service Flow
                 wmanIf2mBsServiceFlowDirection,
                 wmanIf2mBsProvisionedGlobalServiceClass,
                 wmanIf2mBsAdmittedGlobalServiceClass,
                 wmanIf2mBsActiveGlobalServiceClass,
                 wmanIf2mBsProvisionedQoSProfileIndex,
                 wmanIf2mBsAdmittedQoSProfileIndex,
                 wmanIf2mBsActiveQoSProfileIndex,
                 wmanIf2mBsArqAttributeIndex,
                 wmanIf2mBsServiceFlowState,
                 wmanIf2mBsCid,
                 wmanIf2mBsSfCsSpecification,
                 wmanIf2mBsSfReqTxPolicy,
                 wmanIf2mBsSfTargetSaid,
                 wmanIf2mBsSfEstablishTime,
                 wmanIf2mBsSfTerminateTime,
                 wmanIf2mBsSfFixedVsVariableSdu,
                 wmanIf2mBsSfFragmentSeqNumType,
                 wmanIf2mBsSfMbsService,

                 -- Classifier
                 wmanIf2mBsClassifierRulePriority,
                 wmanIf2mBsClassifierRuleIpProtocol,
                 wmanIf2mBsClassifierRuleIpSrcAddr,
                 wmanIf2mBsClassifierRuleIpSrcMask,
                 wmanIf2mBsClassifierRuleIpDestAddr,
                 wmanIf2mBsClassifierRuleIpDestMask,
                 wmanIf2mBsClassifierRuleSrcPortStart,
                 wmanIf2mBsClassifierRuleSrcPortEnd,
                 wmanIf2mBsClassifierRuleDestPortStart,
                 wmanIf2mBsClassifierRuleDestPortEnd,
                 wmanIf2mBsClassifierRuleDestMacAddr,
                 wmanIf2mBsClassifierRuleDestMacMask,
                 wmanIf2mBsClassifierRuleSrcMacAddr,
                 wmanIf2mBsClassifierRuleSrcMacMask,
                 wmanIf2mBsClassifierRuleEnetType,
                 wmanIf2mBsClassifierRuleEnetProtocol,
```

```
                wmanIf2mBsClassifierRuleUserPriLow,
                wmanIf2mBsClassifierRuleUserPriHigh,
                wmanIf2mBsClassifierRuleVlanId,
                wmanIf2mBsClassifierRuleIpv6FlowLabel,
                wmanIf2mBsClassifierRuleAction,
                wmanIf2mBsClassifierIpTypeOfService,
                wmanIf2mBsClassifierRulePkts,
                wmanIf2mBsClassifierRuleBitMap,
                wmanIf2mBsClassifierRuleAssociatedPhsi,

                -- PHS rules
                wmanIf2mBsPhsRulePhsField,
                wmanIf2mBsPhsRulePhsMask,
                wmanIf2mBsPhsRulePhsSize,
                wmanIf2mBsPhsRulePhsVerify,

                -- QoS Profile
                wmanIf2mBsQosServiceClassName,
                wmanIf2mBsQosUlGrantScheduleType,
                wmanIf2mBsQosTrafficPriority,
                wmanIf2mBsQosMaximumSustainedRate,
                wmanIf2mBsQosMinimumReservedRate,
                wmanIf2mBsQosMaximumTrafficBurst,
                wmanIf2mBsQosToleratedJitter,
                wmanIf2mBsQosMaxLatency,
                wmanIf2mBsQosUnsolicitedGrantInterval,
                wmanIf2mBsQosSduSize,
                wmanIf2mBsQosUnsolicitedPollInterval,

                -- ARQ attributes
                wmanIf2mBsArqEnable,
                wmanIf2mBsArqWindowSize,
                wmanIf2mBsArqTxRetryTimeout,
                wmanIf2mBsArqRxRetryTimeout,
                wmanIf2mBsArqBlockLifetime,
                wmanIf2mBsArqSyncLossTimeout,
                wmanIf2mBsArqDeliverInOrder,
                wmanIf2mBsArqRxPurgeTimeout,
                wmanIf2mBsArqBlockSizeReq,
                wmanIf2mBsArqBlockSizeRsp,
                wmanIf2mBsArqAckProcessingTime}
        STATUS       current
        DESCRIPTION
            "This group contains objects for service flow."
        ::= { wmanIf2mBsMibGroups 5 }

wmanIf2mBsMibSleepModeGroup     OBJECT-GROUP
        OBJECTS {wmanIf2mBsSsSleepWindowStarted,
                wmanIf2mBsSsListeningWindowStarted,
                wmanIf2mBsSsPendingMsdu,
                wmanIf2mBsSsSleepWindowTimeStamp,
                wmanIf2mBsScanReqDuration,
                wmanIf2mBsScanReqInterleavingInterval,
                wmanIf2mBsScanReqIteration,
```



```
                wmanIf2mBsNumOfRecommendedBs,
                wmanIf2mBsScanConfigChangeCount,
                wmanIf2mBsScanRspDuration,
                wmanIf2mBsScanRspInterleavingInterval,
                wmanIf2mBsScanRspIteration,
                wmanIf2mBsReportMode,
                wmanIf2mBsReportPeriod,
                wmanIf2mBsReportMetric,
                wmanIf2mBsStartFrame,
                wmanIf2mBsFullBsId,
                wmanIf2mBsScanningType,
                wmanIf2mBsRendezvousTime,
                wmanIf2mBsScanCdmaCode,
                wmanIf2mBsTxOpportunityOffset,
                wmanIf2mBsCinrMean,
                wmanIf2mBsRssiMean,
                wmanIf2mBsRelativeDelay,
                wmanIf2mBsFbssMdhoCinrMean,
                wmanIf2mBsFbssMdhoRssiMean,
                wmanIf2mBsFbssMdhoRelativeDelay,
                wmanIf2mBsFbssMdhoRtd}
        STATUS       current
        DESCRIPTION
            "This group contains objects for sleep mode."
        ::= { wmanIf2mBsMibGroups 6 }
END
```

13.2.5 wmanIf2fBsMib

```
WMAN-IF2F-BS-MIB DEFINITIONS ::= BEGIN

  IMPORTS
        MODULE-IDENTITY,
        OBJECT-TYPE,
        Unsigned32, Integer32, Counter64
                FROM SNMPv2-SMI
        TEXTUAL-CONVENTION,
        MacAddress, RowStatus, TruthValue,
        TimeStamp
                FROM SNMPv2-TC
        InetAddressType, InetAddress
                FROM INET-ADDRESS-MIB
        WmanIf2TcCidType, WmanIf2TcCsType,
        WmanIf2TcIpv6FlowLabel, WmanIf2TcPhsRuleVerify,
        WmanIf2TcSchedulingType, WmanIf2TcReqTxPolicy,
        WmanIf2TcSfDirection, WmanIf2TcArqBlockSize,
        WmanIf2TcSduType, WmanIf2TcFsnType, WmanIf2TcMbsType,
        WmanIf2TcSfState, WmanIf2TcCidDescriptor,
        WmanIf2TcActionRule, WmanIf2TcIpTypOfServ,
        WmanIf2TcClassifierMap, WmanIf2TcEthernetType
                FROM WMAN-IF2-TC-MIB
        OBJECT-GROUP,
        MODULE-COMPLIANCE
                FROM SNMPv2-CONF
        ifIndex
                FROM IF-MIB;

wmanIf2fBsMib MODULE-IDENTITY
        LAST-UPDATED    "200901280000Z" -- January 28, 2009
        ORGANIZATION    "IEEE 802.16"
        CONTACT-INFO
            "WG E-mail:  stds-802-16@ieee.org
             WG Chair:   Roger B. Marks
             Postal:     WiMAX Forum
             E-mail:     r.b.marks@ieee.org

             TG Chair:   Jonathan Labs
             Postal:     Wavesat Inc.
             E-mail:     JLabs@wavesat.com

             TG Contact: Phillip Barber
             Postal:     Huawei Technologies Co., Ltd
             E-mail:     pbarber@Huawei.com

             Editor:     Joey Chou
             Postal:     Intel Corporation
                         5000 W. Chandler Blvd,
                         Chandler, AZ 85227, USA
             E-mail:     joey.chou@intel.com"
        DESCRIPTION
            "This MIB Module defines managed objects for Base Stations
```



```
             based on IEEE Std 802.16 supporting fixed BWA."
        REVISION        "200901280000Z"
        DESCRIPTION
            "Includes changeas per comment resolutions agreed at the
             San Diego meeting"
        REVISION        "200810010000Z"
        DESCRIPTION
            "Includes changeas per comment resolutions agreed at the
             Kobe meeting"
        REVISION        "200807220000Z"
        DESCRIPTION
            "Includes changes as per comment resolutions agreed at the
             Denver meeting"
        REVISION        "200805270000Z"
        DESCRIPTION
            "Includes changes as per comment resolutions agreed at the
             Macau meeting"
        REVISION        "200803310000Z"
        DESCRIPTION
            "Includes changes as per comment resolutions agreed at the
             Orlando meeting"
        REVISION        "200802110000Z"
        DESCRIPTION
            "Includes changes as per comment resolutions agreed at the
             Levi meeting"
        REVISION        "200711300000Z"
        DESCRIPTION
            "The first revision of WMAN-IF2F-BS-MIB module that supports
             direct service flow provisioning."
        ::= { iso std(0) iso8802(8802) wman(16) 4 }

-- Textual Conventions
WmanIf2fServClassName ::= TEXTUAL-CONVENTION
        STATUS      current
        DESCRIPTION
            "Defines the type of service class name."
        SYNTAX      OCTET STRING (SIZE(2..128))

--
-- BS object group - containing tables and objects to be implemented in
-- the Base station
wmanIf2fBsProvServiceFlowTable OBJECT-TYPE
        SYNTAX      SEQUENCE OF WmanIf2fBsProvServiceFlowEntry
        MAX-ACCESS  not-accessible
        STATUS      current
        DESCRIPTION
            "This table contains service flow profiles provisioned by
             NMS. The service flow should be created with SS(s)
             following instruction given by wmanIf2fBsSfState object.
             1. The QoS parameters of the service flow are provisioned
                in wmanIf2fBsServiceClassTable and referenced by
                wmanIf2fBsServiceClassIndex.
             2. The classifier rules of the service flow are provisioned
                in wmanIf2fBsClassifierRuleTable, where they refer to SF
```

```
                via wmanIf2fBsSfId.

             The MAC addresses of SSs the service flow is created with
             are provisioned in wmanIf2fBsSsProvisionedForSfTable, where
             they refer to SF via wmanIf2fBsSfId."
        REFERENCE
            "Subclause 6.3.13 and 6.3.14"
        ::= { wmanIf2fBsMib 1 }

wmanIf2fBsProvServiceFlowEntry OBJECT-TYPE
        SYNTAX      WmanIf2fBsProvServiceFlowEntry
        MAX-ACCESS  not-accessible
        STATUS      current
        DESCRIPTION
            "This table provides one row for each service flow
             provisioned by NMS."
        INDEX     { ifIndex,
                    wmanIf2fBsSsProvMacAddress,
                    wmanIf2fBsSfId }
        ::= { wmanIf2fBsProvServiceFlowTable 1 }

WmanIf2fBsProvServiceFlowEntry ::= SEQUENCE {
        wmanIf2fBsSsProvMacAddress              MacAddress,
        wmanIf2fBsSfId                          Unsigned32,
        wmanIf2fBsSfDirection                   WmanIf2TcSfDirection,
        wmanIf2fBsServiceClassIndex             Integer32,
        wmanIf2fBsSfState                       WmanIf2TcSfState,
        wmanIf2fBsSfProvisionedTime             TimeStamp,
        wmanIf2fBsSfCsSpecification             WmanIf2TcCsType,
        wmanIf2fBsProvisionedSfRowStatus        RowStatus}

wmanIf2fBsSsProvMacAddress OBJECT-TYPE
        SYNTAX      MacAddress
        MAX-ACCESS  not-accessible
        STATUS      current
        DESCRIPTION
            "The MAC address of the SS, the service flow is created
             with."
        ::= { wmanIf2fBsProvServiceFlowEntry 1 }

wmanIf2fBsSfId OBJECT-TYPE
        SYNTAX      Unsigned32 (1 .. 4294967295)
        MAX-ACCESS  not-accessible
        STATUS      current
        DESCRIPTION
            "A 32 bit quantity that uniquely identifies a service flow
             to both the subscriber station and base station (BS)."
        ::= { wmanIf2fBsProvServiceFlowEntry 2 }

wmanIf2fBsSfDirection OBJECT-TYPE
        SYNTAX      WmanIf2TcSfDirection
        MAX-ACCESS  read-create
        STATUS      current
        DESCRIPTION
```



```
            "An attribute indicating the service flow is downstream or
             upstream."
        ::= { wmanIf2fBsProvServiceFlowEntry 3 }

wmanIf2fBsServiceClassIndex OBJECT-TYPE
        SYNTAX      Integer32 (1..65535)
        MAX-ACCESS  read-create
        STATUS      current
        DESCRIPTION
            "The index in wmanIf2fBsServiceClassTable describing the
             service class or QoS parameters for such service flow.
             If no associated entry in wmanIf2fBsServiceClassTable
             exists, this object returns a value of zero."
        ::= { wmanIf2fBsProvServiceFlowEntry 4 }

wmanIf2fBsSfState OBJECT-TYPE
        SYNTAX      WmanIf2TcSfState
        MAX-ACCESS  read-create
        STATUS      current
        DESCRIPTION
            "wmanIf2fBsSfState determines the requested state of a
             service flow."
        ::= { wmanIf2fBsProvServiceFlowEntry 5 }

wmanIf2fBsSfProvisionedTime OBJECT-TYPE
        SYNTAX      TimeStamp
        MAX-ACCESS  read-create
        STATUS      current
        DESCRIPTION
            "Indicates the date and time when the service flow is
             provisioned."
        ::= { wmanIf2fBsProvServiceFlowEntry 6 }

wmanIf2fBsSfCsSpecification OBJECT-TYPE
        SYNTAX      WmanIf2TcCsType
        MAX-ACCESS  read-create
        STATUS      current
        DESCRIPTION
            "This parameter specifies the convergence sublayer
             encapsulation mode."
        REFERENCE
            "Subclause 11.13.19.1"
        ::= { wmanIf2fBsProvServiceFlowEntry 7 }

wmanIf2fBsProvisionedSfRowStatus OBJECT-TYPE
        SYNTAX      RowStatus
        MAX-ACCESS  read-create
        STATUS      current
        DESCRIPTION
            "This object is used to create a new row or modify or delete
             an existing row in this table.

             If the implementator of this MIB has choosen not to
             implement 'dynamic assignment' of profiles, this object is
```

```
             not useful and should return noSuchName upon SNMP request."
        ::= { wmanIf2fBsProvServiceFlowEntry 8 }

wmanIf2fBsProvServiceClassTable OBJECT-TYPE
        SYNTAX      SEQUENCE OF WmanIf2fBsProvServiceClassEntry
        MAX-ACCESS  not-accessible
        STATUS      current
        DESCRIPTION
            "This table contains corresponding service flow
             characteristic attributes (e.g. QoS parameter set)."
        REFERENCE
            "Subclause 6.3.14.4"
        ::= { wmanIf2fBsMib 2 }

wmanIf2fBsProvServiceClassEntry OBJECT-TYPE
        SYNTAX      WmanIf2fBsProvServiceClassEntry
        MAX-ACCESS  not-accessible
        STATUS      current
        DESCRIPTION
            "This table provides one row for each service class, and is
             indexed by wmanIf2fBsQoSProfileIndex that is obtained from
             wmanIf2fBsServiceClassIndex in the
             wmanIf2fBsProvisionedSfTable"
        INDEX     { ifIndex, wmanIf2fBsQoSProfileIndex }
        ::= { wmanIf2fBsProvServiceClassTable 1 }

WmanIf2fBsProvServiceClassEntry ::= SEQUENCE {
        wmanIf2fBsQoSProfileIndex               Integer32,
        wmanIf2fBsQosServiceClassName           WmanIf2fServClassName,
        wmanIf2fBsQoSTrafficPriority            Integer32,
        wmanIf2fBsQoSMaxSustainedRate           Unsigned32,
        wmanIf2fBsQoSMaxTrafficBurst            Unsigned32,
        wmanIf2fBsQoSMinReservedRate            Unsigned32,
        wmanIf2fBsQoSToleratedJitter            Unsigned32,
        wmanIf2fBsQoSMaxLatency                 Unsigned32,
       wmanIf2fBsQoSFixedVsVariableSduInd     WmanIf2TcSduType,
        wmanIf2fBsQoSSduSize                    Unsigned32,
        wmanIf2fBsQosScSchedulingType           WmanIf2TcSchedulingType,
        wmanIf2fBsQosScArqEnable                TruthValue,
        wmanIf2fBsQosScArqWindowSize            Integer32,
        wmanIf2fBsQosArqTxRetryTimeout        Integer32,
        wmanIf2fBsQosArqRxRetryTimeout          Integer32,
        wmanIf2fBsQosScArqBlockLifetime         Integer32,
        wmanIf2fBsQosScArqSyncLossTimeout       Integer32,
        wmanIf2fBsQosScArqDeliverInOrder        TruthValue,
        wmanIf2fBsQosScArqRxPurgeTimeout        Integer32,
        wmanIf2fBsQosScArqBlockSizeReq          WmanIf2TcArqBlockSize,
        wmanIf2fBsQosScArqBlockSizeRsp          Integer32,
        wmanIf2fBsQosReqTxPolicy                WmanIf2TcReqTxPolicy,
        wmanIf2fBsQosFragmentSeqNumType         WmanIf2TcFsnType,
        wmanIf2fBsQosMbsService                 WmanIf2TcMbsType,
        wmanIf2fBsQosServiceClassRowStatus      RowStatus}

wmanIf2fBsQoSProfileIndex OBJECT-TYPE
```



```
        SYNTAX      Integer32 (1 .. 65535)
        MAX-ACCESS  not-accessible
        STATUS      current
        DESCRIPTION
            "The index value which uniquely identifies an entry
             in the wmanIf2fBsServiceClassTable"
        ::= { wmanIf2fBsProvServiceClassEntry 1 }

wmanIf2fBsQosServiceClassName  OBJECT-TYPE
        SYNTAX      WmanIf2fServClassName
        MAX-ACCESS  read-create
        STATUS      current
        DESCRIPTION
            "Refers to the Service Class Name"
        REFERENCE
            "Subclause 11.13.3"
        ::= { wmanIf2fBsProvServiceClassEntry 2 }

wmanIf2fBsQoSTrafficPriority OBJECT-TYPE
        SYNTAX      Integer32 (0..7)
        MAX-ACCESS  read-create
        STATUS      current
        DESCRIPTION
            "The value of this parameter specifies the priority
             assigned to a service flow. For uplink service flows,
             the BS should use this parameter when determining
             precedence in request service and grant generation,
             and the SS shall preferentially select contention
             Request opportunities for Priority Request CIDs
             based on this priority. Higher numbers indicate higher
             priority"
        REFERENCE
            "Subclause 11.13.5"
        ::= { wmanIf2fBsProvServiceClassEntry 3 }

wmanIf2fBsQoSMaxSustainedRate OBJECT-TYPE
        SYNTAX      Unsigned32
        UNITS       "b/s"
        MAX-ACCESS  read-create
        STATUS      current
        DESCRIPTION
            "This parameter defines the peak information rate of the
             service. The rate is expressed in bits per second and
             pertains to the SDUs at the input to the system."
        REFERENCE
            "Subclause 11.13.6"
        ::= { wmanIf2fBsProvServiceClassEntry 4 }

wmanIf2fBsQoSMaxTrafficBurst OBJECT-TYPE
        SYNTAX      Unsigned32
        UNITS       "byte"
        MAX-ACCESS  read-create
        STATUS      current
        DESCRIPTION
```

```
            "This parameter defines the maximum burst size that must be
             accommodated for the service."
        REFERENCE
            "Subclause 11.13.7"
        ::= { wmanIf2fBsProvServiceClassEntry 5 }

wmanIf2fBsQoSMinReservedRate OBJECT-TYPE
        SYNTAX      Unsigned32
        UNITS       "b/s"
        MAX-ACCESS  read-create
        STATUS      current
        DESCRIPTION
            "This parameter specifies the minimum rate reserved for this
             service flow."
        REFERENCE
            "Subclause 11.13.8"
        ::= { wmanIf2fBsProvServiceClassEntry 6 }

wmanIf2fBsQoSToleratedJitter OBJECT-TYPE
        SYNTAX      Unsigned32
        UNITS       "millisecond"
        MAX-ACCESS  read-create
        STATUS      current
        DESCRIPTION
            "This parameter defines the Maximum delay variation (jitter)
             for the connection."
        REFERENCE
            "Subclause 11.13.12"
        ::= { wmanIf2fBsProvServiceClassEntry 7 }

wmanIf2fBsQoSMaxLatency OBJECT-TYPE
        SYNTAX      Unsigned32
        UNITS       "millisecond"
        MAX-ACCESS  read-create
        STATUS      current
        DESCRIPTION
            "The value of this parameter specifies the maximum latency
             between the reception of a packet by the BS or SS on its
             network interface and the forwarding of the packet to its
             RF Interface."
        REFERENCE
            "Subclause 11.13.13"
        ::= { wmanIf2fBsProvServiceClassEntry 8 }

wmanIf2fBsQoSFixedVsVariableSduInd OBJECT-TYPE
        SYNTAX      WmanIf2TcSduType
        MAX-ACCESS  read-create
        STATUS      current
        DESCRIPTION
            "The value of this parameter specifies whether the SDUs on
             the service flow are variable-length (0) or fixed-length
             (1). The parameter is used only if packing is on for the
             service flow. The default value is 0, i.e.,variable-length
             SDUs."
```



```
        REFERENCE
            "Subclause 11.13.14"
        DEFVAL      { variableLength }
        ::= { wmanIf2fBsProvServiceClassEntry 9 }

wmanIf2fBsQoSSduSize OBJECT-TYPE
        SYNTAX      Unsigned32
        UNITS       "byte"
        MAX-ACCESS  read-create
        STATUS      current
        DESCRIPTION
            "The value of this parameter specifies the length of the
             SDU for a fixed-length SDU service flow. This parameter
             is used only if packing is on and the service flow is
             indicated as carrying fixed-length SDUs. The default
             value is 49 bytes, i.e., VC-switched ATM cells with PHS.
             The parameter is relevant for both ATM and Packet
             Convergence Sublayers."
        REFERENCE
            "Subclause 11.13.15"
        DEFVAL      { 49 }
        ::= { wmanIf2fBsProvServiceClassEntry 10 }

wmanIf2fBsQosScSchedulingType OBJECT-TYPE
        SYNTAX      WmanIf2TcSchedulingType
        MAX-ACCESS  read-create
        STATUS      current
        DESCRIPTION
            "Specifies the upstream scheduling service used for upstream
             service flow. If the referenced parameter is not present in
             the corresponding 802.16 QOS Parameter Set of an upstream
             service flow, the default value of this object is
             bestEffort(2)."
        REFERENCE
            "Subclause 11.13.10"
        DEFVAL    {bestEffort}
        ::= { wmanIf2fBsProvServiceClassEntry 11 }

wmanIf2fBsQosScArqEnable OBJECT-TYPE
        SYNTAX      TruthValue
        MAX-ACCESS  read-create
        STATUS      current
        DESCRIPTION
            "True(1) ARQ enabling is requested for the connection."
        REFERENCE
            "Subclause 11.13.17.1"
        ::= { wmanIf2fBsProvServiceClassEntry 12 }

wmanIf2fBsQosScArqWindowSize OBJECT-TYPE
        SYNTAX      Integer32 (1 .. 1024)
        MAX-ACCESS  read-create
        STATUS      current
        DESCRIPTION
            "Indicates the maximum number of unacknowledged
```

```
             fragments at any time."
        REFERENCE
            "Subclause 11.13.17.2"
        ::= { wmanIf2fBsProvServiceClassEntry 13 }

wmanIf2fBsQosArqTxRetryTimeout OBJECT-TYPE
        SYNTAX    Integer32 (0 .. 65535)
        UNITS    "100 us"
        MAX-ACCESS  read-create
        STATUS      current
        DESCRIPTION
            "Indicates transmitter delay, including sending (e.g., MAC
             PDUs) and receiving (e.g., ARQ feedback) delays and other
             implementation dependent processing delays. If the
             transmitter is the BS, it may include other delays such as
             scheduling and propagation delay."
        REFERENCE
            "Subclause 11.13.17.3"
        ::= { wmanIf2fBsProvServiceClassEntry 14 }

wmanIf2fBsQosArqRxRetryTimeout OBJECT-TYPE
        SYNTAX    Integer32 (0 .. 65535)
        UNITS    "100 us"
        MAX-ACCESS  read-create
        STATUS      current
        DESCRIPTION
            "Indicates receiver delay, including receiving (e.g., MAC
             PDUs) and sending (e.g., ARQ feedback) delays and other
             implementation-dependent processing delays. If the
             receiver is the BS, it may include other delays such as
             scheduling and propagation delay."
        REFERENCE
            "Subclause 11.13.17.3"
        ::= { wmanIf2fBsProvServiceClassEntry 15 }

wmanIf2fBsQosScArqBlockLifetime OBJECT-TYPE
        SYNTAX    Integer32 (0 .. 65535)
        UNITS    "100 us"
        MAX-ACCESS  read-create
        STATUS      current
        DESCRIPTION
            "The maximum time interval an ARQ fragment will be managed
             by the transmitter ARQ machine, once initial transmission
             of the fragment has occured. If transmission or
             retransmission of the fragment is not acknowledged by the
             receiver before the time limit is reached, the fragment is
             discarded. A value of 0 means Infinite."
        REFERENCE
            "Subclause 11.13.17.4"
        DEFVAL    {0}
        ::= { wmanIf2fBsProvServiceClassEntry 16 }

wmanIf2fBsQosScArqSyncLossTimeout OBJECT-TYPE
        SYNTAX      Integer32 (0 .. 65535 )
```



```
        UNITS       "100 us"
        MAX-ACCESS  read-create
        STATUS      current
        DESCRIPTION
            "The maximum interval before declaring a loss of
             synchronization of the sender and receiver state machines.
             A value of 0 means Infinite."
        REFERENCE
            "Subclause 11.13.17.5"
        DEFVAL    {0}
        ::= { wmanIf2fBsProvServiceClassEntry 17 }

wmanIf2fBsQosScArqDeliverInOrder  OBJECT-TYPE
        SYNTAX      TruthValue
        MAX-ACCESS  read-create
        STATUS      current
        DESCRIPTION
            "Indicates whether or not data is to be delivered by the
             receiving MAC to its client application in the order in
             which data was handed off to the originating MAC."
        REFERENCE
            "Subclause 11.13.17.6"
        ::= { wmanIf2fBsProvServiceClassEntry 18 }

wmanIf2fBsQosScArqRxPurgeTimeout  OBJECT-TYPE
        SYNTAX      Integer32 (0 .. 65535)
        UNITS       "100 us"
        MAX-ACCESS  read-create
        STATUS      current
        DESCRIPTION
            "Indicates the time interval the ARQ window is advanced
             after a fragment is received. A value of 0 means Infinite."
        REFERENCE
            "Subclause 11.13.17.7"
        DEFVAL    {0}
        ::= { wmanIf2fBsProvServiceClassEntry 19 }

wmanIf2fBsQosScArqBlockSizeReq OBJECT-TYPE
        SYNTAX    WmanIf2TcArqBlockSize
        MAX-ACCESS  read-create
        STATUS      current
        DESCRIPTION
            "This value of this parameter specifies the size of an ARQ
             block included in DSA-REQ and RSG-REQ. This parameter shall
             be established by negotiation during the connection
             creation dialog."
        REFERENCE
            "Subclause 11.13.17.8"
        ::= { wmanIf2fBsProvServiceClassEntry 20 }

wmanIf2fBsQosScArqBlockSizeRsp OBJECT-TYPE
        SYNTAX    Integer32 (0 .. 15)
        MAX-ACCESS  read-create
        STATUS      current
```

```
        DESCRIPTION
            "This value of this parameter specifies the size of an ARQ
             block included in DSA-RSP and RSG-RSP.
             Bit 0-3: encoding for selected block size (P)
             Bit 4-7: set to 0
             where:
                The selected block size is equal to 2^(P+4), P<=6 and
                M<=N"
        REFERENCE
            "Subclause 11.13.17.8"
        ::= { wmanIf2fBsProvServiceClassEntry 21 }

wmanIf2fBsQosReqTxPolicy OBJECT-TYPE
        SYNTAX      WmanIf2TcReqTxPolicy
        MAX-ACCESS  read-create
        STATUS      current
        DESCRIPTION
            "The value of this parameter provides the capability to
             specify certain attributes for the associated service
             flow. An attribute is enabled by setting the corresponding
             bit position to 1."
        REFERENCE   "Subclause 11.13.11"
        ::= { wmanIf2fBsProvServiceClassEntry 22 }

wmanIf2fBsQosFragmentSeqNumType OBJECT-TYPE
        SYNTAX      WmanIf2TcFsnType
        MAX-ACCESS  read-create
        STATUS      current
        DESCRIPTION
            "The value of this parameter indicates the size of the FSN
             for the connection that is being setup.
                '0' indicates 3 bits FSN
                '1' indicates 11 bit FSN"
        REFERENCE
            "Subclause 11.13.21"
        DEFVAL      { elevenBits }
        ::= { wmanIf2fBsProvServiceClassEntry 23 }

wmanIf2fBsQosMbsService OBJECT-TYPE
        SYNTAX      WmanIf2TcMbsType
        MAX-ACCESS  read-create
        STATUS      current
        DESCRIPTION
            "The value of this parameter indicates whether the MBS
             service is being requested or provided for a connection"
        REFERENCE
            "Subclause 11.13.22"
        ::= { wmanIf2fBsProvServiceClassEntry 24 }

wmanIf2fBsQosServiceClassRowStatus OBJECT-TYPE
        SYNTAX      RowStatus
        MAX-ACCESS  read-create
        STATUS      current
        DESCRIPTION
```



```
            "This object is used to create a new row or modify or delete
             an existing row in this table.

             If the implementator of this MIB has choosen not to
             implement 'dynamic assignment' of profiles, this object is
             not useful and should return noSuchName upon SNMP request."
        ::= { wmanIf2fBsProvServiceClassEntry 25 }

wmanIf2fBsServiceFlowTable OBJECT-TYPE
        SYNTAX      SEQUENCE OF WmanIf2fBsServiceFlowEntry
        MAX-ACCESS  not-accessible
        STATUS      current
        DESCRIPTION
            "This table contains Service Flow managed objects that
             are common in BS and SS."
        ::= { wmanIf2fBsMib 3 }

wmanIf2fBsServiceFlowEntry OBJECT-TYPE
        SYNTAX      WmanIf2fBsServiceFlowEntry
        MAX-ACCESS  not-accessible
        STATUS      current
        DESCRIPTION
            "This table provides one row for each created service
             flow for a given MacAddress."
        INDEX     { ifIndex,
                    wmanIf2fBsSfMacAddress,
                    wmanIf2fBsSfId }
        ::= { wmanIf2fBsServiceFlowTable 1 }

WmanIf2fBsServiceFlowEntry::= SEQUENCE {
        wmanIf2fBsSfMacAddress                  MacAddress,
        wmanIf2fBsSfCid                         WmanIf2TcCidType,
        wmanIf2fBsServiceFlowDirection          WmanIf2TcSfDirection,
        wmanIf2fBsServiceFlowState              WmanIf2TcSfState,
        wmanIf2fBsTrafficPriority               Integer32,
        wmanIf2fBsMaxSustainedRate              Unsigned32,
        wmanIf2fBsMaxTrafficBurst               Unsigned32,
        wmanIf2fBsMinReservedRate               Unsigned32,
        wmanIf2fBsToleratedJitter               Unsigned32,
        wmanIf2fBsMaxLatency                    Unsigned32,
        wmanIf2fBsFixedVsVariableSduInd         WmanIf2TcSduType,
        wmanIf2fBsSduSize                       Unsigned32,
        wmanIf2fBsSfSchedulingType              WmanIf2TcSchedulingType,
        wmanIf2fBsArqEnable                     TruthValue,
        wmanIf2fBsArqWindowSize                 Integer32,
        wmanIf2fBsArqTxRetryTimeout            Integer32,
        wmanIf2fBsArqRxRetryTimeout            Integer32,
        wmanIf2fBsArqBlockLifetime              Integer32,
        wmanIf2fBsArqSyncLossTimeout            Integer32,
        wmanIf2fBsArqDeliverInOrder             TruthValue,
        wmanIf2fBsArqRxPurgeTimeout             Integer32,
        wmanIf2fBsScArqBlockSizeReq             WmanIf2TcArqBlockSize,
        wmanIf2fBsScArqBlockSizeRsp             Integer32,
        wmanIf2fBsReqTxPolicy                   WmanIf2TcReqTxPolicy,
```

```
        wmanIf2fBsCsSpecification               WmanIf2TcCsType,
        wmanIf2fBsTargetSaid                    Integer32,
        wmanIf2fBsFragmentSeqNumType            WmanIf2TcFsnType,
        wmanIf2fBsMbsService                    WmanIf2TcMbsType}

wmanIf2fBsSfMacAddress OBJECT-TYPE
        SYNTAX      MacAddress
        MAX-ACCESS  not-accessible
        STATUS      current
        DESCRIPTION
            "When this table is implemented on the basestation, this
             object contains the SS Mac address, the reported service
             flow was created for. On the SS, the value returned is
             the SS's own Mac address."
        ::= { wmanIf2fBsServiceFlowEntry 1 }

wmanIf2fBsSfCid OBJECT-TYPE
        SYNTAX      WmanIf2TcCidType
        MAX-ACCESS  not-accessible
        STATUS      current
        DESCRIPTION
            "A 16 bit channel identifier to identify the connection
             being created by DSA."
        ::= { wmanIf2fBsServiceFlowEntry 2 }

wmanIf2fBsServiceFlowDirection OBJECT-TYPE
        SYNTAX      WmanIf2TcSfDirection
        MAX-ACCESS  read-only
        STATUS      current
        DESCRIPTION
            "An attribute indicating the service flow is downstream or
             upstream."
        ::= { wmanIf2fBsServiceFlowEntry 3 }

wmanIf2fBsServiceFlowState OBJECT-TYPE
        SYNTAX      WmanIf2TcSfState
        MAX-ACCESS  read-only
        STATUS      current
        DESCRIPTION
            "This object indicates the service flow state."
        ::= { wmanIf2fBsServiceFlowEntry 4 }

wmanIf2fBsTrafficPriority OBJECT-TYPE
        SYNTAX      Integer32 (0 .. 7)
        MAX-ACCESS  read-only
        STATUS      current
        DESCRIPTION
            "The value of this parameter specifies the priority
             assigned to a service flow. For uplink service flows,
             the BS should use this parameter when determining
             precedence in request service and grant generation,
             and the SS shall preferentially select contention
             Request opportunities for Priority Request CIDs
             based on this priority"
```



```
        REFERENCE
            "Subclause 11.13.5"
        ::= { wmanIf2fBsServiceFlowEntry 5 }

wmanIf2fBsMaxSustainedRate OBJECT-TYPE
        SYNTAX      Unsigned32
        UNITS       "b/s"
        MAX-ACCESS  read-only
        STATUS      current
        DESCRIPTION
            "This parameter defines the peak information rate
             of the service. The rate is expressed in bits per
             second and pertains to the SDUs at the input to
             the system."
        REFERENCE
            "Subclause 11.13.6"
        ::= { wmanIf2fBsServiceFlowEntry 6 }

wmanIf2fBsMaxTrafficBurst OBJECT-TYPE
        SYNTAX      Unsigned32
        UNITS    "byte"
        MAX-ACCESS  read-only
        STATUS      current
        DESCRIPTION
            "This parameter defines the maximum burst size that
             must be accommodated for the service."
        REFERENCE
            "Subclause 11.13.7"
        ::= { wmanIf2fBsServiceFlowEntry 7 }

wmanIf2fBsMinReservedRate OBJECT-TYPE
        SYNTAX      Unsigned32
        UNITS       "byte"
        MAX-ACCESS  read-only
        STATUS      current
        DESCRIPTION
            "This parameter specifies the minimum rate reserved
             for this service flow."
        REFERENCE
            "Subclause 11.13.8"
        ::= { wmanIf2fBsServiceFlowEntry 8 }

wmanIf2fBsToleratedJitter OBJECT-TYPE
        SYNTAX      Unsigned32
        UNITS       "millisecond"
        MAX-ACCESS  read-only
        STATUS      current
        DESCRIPTION
            "This parameter defines the Maximum delay
             variation (jitter) for the connection."
        REFERENCE
            "Subclause 11.13.12"
        ::= { wmanIf2fBsServiceFlowEntry 9 }
```

```
wmanIf2fBsMaxLatency OBJECT-TYPE
        SYNTAX      Unsigned32
        UNITS       "millisecond"
        MAX-ACCESS  read-only
        STATUS      current
        DESCRIPTION
            "The value of this parameter specifies the maximum
             latency between the reception of a packet by the BS
             or SS on its network interface and the forwarding
             of the packet to its RF Interface."
        REFERENCE
            "Subclause 11.13.13"
        ::= { wmanIf2fBsServiceFlowEntry 10 }

wmanIf2fBsFixedVsVariableSduInd OBJECT-TYPE
        SYNTAX      WmanIf2TcSduType
        MAX-ACCESS  read-only
        STATUS      current
        DESCRIPTION
            "The value of this parameter specifies whether the SDUs
             on the service flow are variable-length (0) or
             fixed-length (1). The parameter is used only if
             packing is on for the service flow. The default value
             is 0, i.e.,variable-length SDUs."
        REFERENCE
            "Subclause 11.13.14"
        DEFVAL      { variableLength }
        ::= { wmanIf2fBsServiceFlowEntry 11 }

wmanIf2fBsSduSize OBJECT-TYPE
        SYNTAX      Unsigned32
        UNITS       "byte"
        MAX-ACCESS  read-only
        STATUS      current
        DESCRIPTION
            "The value of this parameter specifies the length of the
             SDU for a fixed-length SDU service flow. This parameter
             is used only if packing is on and the service flow is
             indicated as carrying fixed-length SDUs. The default
             value is 49 bytes, i.e., VC-switched ATM cells with PHS.
             The parameter is relevant for both ATM and Packet
             Convergence Sublayers."
        REFERENCE
            "Subclause 11.13.15"
        DEFVAL      { 49 }
        ::= { wmanIf2fBsServiceFlowEntry 12 }

wmanIf2fBsSfSchedulingType OBJECT-TYPE
        SYNTAX      WmanIf2TcSchedulingType
        MAX-ACCESS  read-only
        STATUS      current
        DESCRIPTION
            "Specifies the upstream scheduling service used for
             upstream service flow. If the referenced parameter
```



```
             is not present in the corresponding 802.16 QOS
             Parameter Set of an upstream service flow, the
             default value of this object is bestEffort(2)."
        REFERENCE
            "Subclause 11.13.10"
        DEFVAL         { bestEffort }
        ::= { wmanIf2fBsServiceFlowEntry 13 }

wmanIf2fBsArqEnable OBJECT-TYPE
        SYNTAX      TruthValue
        MAX-ACCESS  read-only
        STATUS      current
        DESCRIPTION
            "True(1) ARQ enabling is requested for the connection."
        ::= { wmanIf2fBsServiceFlowEntry 14 }

wmanIf2fBsArqWindowSize OBJECT-TYPE
        SYNTAX    Integer32 (1..1024)
        MAX-ACCESS  read-only
        STATUS      current
        DESCRIPTION
            "Indicates the maximum number of unacknowledged fragments
             at any time."
        ::= { wmanIf2fBsServiceFlowEntry 15 }

wmanIf2fBsArqTxRetryTimeout OBJECT-TYPE
        SYNTAX    Integer32 (0 .. 65535)
        UNITS    "100 us"
        MAX-ACCESS  read-only
        STATUS      current
        DESCRIPTION
            "Indicates transmitter delay, including sending (e.g., MAC
             PDUs) and receiving (e.g., ARQ feedback) delays and other
             implementation dependent processing delays. If the
             transmitter is the BS, it may include other delays such as
             scheduling and propagation delay."
        REFERENCE
            "Subclause 11.13.17.3"
        ::= { wmanIf2fBsServiceFlowEntry 16 }

wmanIf2fBsArqRxRetryTimeout OBJECT-TYPE
        SYNTAX    Integer32 (0 .. 65535)
        UNITS    "100 us"
        MAX-ACCESS  read-only
        STATUS      current
        DESCRIPTION
            "Indicates receiver delay, including receiving (e.g., MAC
             PDUs) and sending (e.g., ARQ feedback) delays and other
             implementation-dependent processing delays. If the
             receiver is the BS, it may include other delays such as
             scheduling and propagation delay."
        REFERENCE
            "Subclause 11.13.17.3"
        ::= { wmanIf2fBsServiceFlowEntry 17 }
```

```
wmanIf2fBsArqBlockLifetime OBJECT-TYPE
        SYNTAX    Integer32 (0 .. 65535)
        UNITS    "100 us"
        MAX-ACCESS  read-only
        STATUS      current
        DESCRIPTION
            "The maximum time interval an ARQ fragment will be
             managed by the transmitter ARQ machine, once
             initial transmission of the fragment has occured.
             If transmission or retransmission of the fragment
             is not acknowledged by the receiver before the
             time limit is reached, the fragment is discarded.
             A value of 0 means Infinite."
        ::= { wmanIf2fBsServiceFlowEntry 18 }

wmanIf2fBsArqSyncLossTimeout OBJECT-TYPE
        SYNTAX    Integer32 (0 .. 65535 )
        UNITS    "100 us"
        MAX-ACCESS  read-only
        STATUS      current
        DESCRIPTION
            "The maximum interval before declaring a loss
             of synchronization of the sender and receiver
             state machines. A value of 0 means Infinite."
        ::= { wmanIf2fBsServiceFlowEntry 19 }

wmanIf2fBsArqDeliverInOrder  OBJECT-TYPE
        SYNTAX      TruthValue
        MAX-ACCESS  read-only
        STATUS      current
        DESCRIPTION
            "Indicates whether or not data is to be delivered
             by the receiving MAC to its client application
             in the order in which data was handed off to the
             originating MAC."
        ::= { wmanIf2fBsServiceFlowEntry 20 }

wmanIf2fBsArqRxPurgeTimeout  OBJECT-TYPE
        SYNTAX    Integer32 (0 .. 65535)
        UNITS    "100 us"
        MAX-ACCESS  read-only
        STATUS      current
        DESCRIPTION
            "Indicates the time interval the ARQ window is advanced
             after a fragment is received. A value of 0 means
             Infinite."
        ::= { wmanIf2fBsServiceFlowEntry 21 }

wmanIf2fBsScArqBlockSizeReq OBJECT-TYPE
        SYNTAX    WmanIf2TcArqBlockSize
        MAX-ACCESS  read-only
        STATUS      current
        DESCRIPTION
```



```
            "This value of this parameter specifies the size of an ARQ
             block included in DSA-REQ and RSG-REQ. This parameter shall
             be established by negotiation during the connection
             creation dialog."
        REFERENCE
            "Subclause 11.13.17.8"
        ::= { wmanIf2fBsServiceFlowEntry 22 }

wmanIf2fBsScArqBlockSizeRsp OBJECT-TYPE
        SYNTAX    Integer32 (0 .. 15)
        MAX-ACCESS  read-only
        STATUS      current
        DESCRIPTION
            "This value of this parameter specifies the size of an ARQ
             block included in DSA-RSP and RSG-RSP.
             Bit 0-3: encoding for selected block size (P)
             Bit 4-7: set to 0
             where:
                The selected block size is equal to 2^(P+4), P<=6 and
                M<=N"
        REFERENCE
            "Subclause 11.13.17.8"
        ::= { wmanIf2fBsServiceFlowEntry 23 }

wmanIf2fBsReqTxPolicy OBJECT-TYPE
        SYNTAX      WmanIf2TcReqTxPolicy
        MAX-ACCESS  read-only
        STATUS      current
        DESCRIPTION
            "The value of this parameter provides the capability to
             specify certain attributes for the associated service
             flow. An attribute is enabled by setting the
             corresponding bit position to 1."
        REFERENCE
            "Subclause 11.13.11"
        ::= { wmanIf2fBsServiceFlowEntry 24 }

wmanIf2fBsCsSpecification OBJECT-TYPE
        SYNTAX      WmanIf2TcCsType
        MAX-ACCESS  read-only
        STATUS      current
        DESCRIPTION
            "This parameter specifies the convergence sublayer
             encapsulation mode."
        REFERENCE
            "Subclause 11.13.18.1"
        ::= { wmanIf2fBsServiceFlowEntry 25 }

wmanIf2fBsTargetSaid OBJECT-TYPE
        SYNTAX      Integer32 (0 .. 65535)
        MAX-ACCESS  read-only
        STATUS      current
        DESCRIPTION
            "The target SAID parameter indicates the SAID onto
```

```
             which the service flow being set up shall be mapped."
        REFERENCE
            "Subclause 11.13.16"
        ::= { wmanIf2fBsServiceFlowEntry 26 }

wmanIf2fBsFragmentSeqNumType OBJECT-TYPE
        SYNTAX      WmanIf2TcFsnType
        MAX-ACCESS  read-only
        STATUS      current
        DESCRIPTION
            "The value of this parameter indicates the size of the FSN
             for the connection that is being setup.
                '0' indicates 3 bits FSN
                '1' indicates 11 bit FSN"
        REFERENCE
            "Subclause 11.13.21"
        DEFVAL      { elevenBits }
        ::= { wmanIf2fBsServiceFlowEntry 27 }

wmanIf2fBsMbsService OBJECT-TYPE
        SYNTAX      WmanIf2TcMbsType
        MAX-ACCESS  read-only
        STATUS      current
        DESCRIPTION
            "The value of this parameter indicates whether the MBS
             service is being requested or provided for a connection"
        REFERENCE
            "Subclause 11.13.22"
        ::= { wmanIf2fBsServiceFlowEntry 28 }

wmanIf2fBsProvClassifierRuleTable OBJECT-TYPE
        SYNTAX      SEQUENCE OF WmanIf2fBsProvClassifierRuleEntry
        MAX-ACCESS  not-accessible
        STATUS      current
        DESCRIPTION
            "This table contains provisioned classifier rules associated
             with service flows."
        REFERENCE
            "Subclause 11.13.18.3.3"
        ::= { wmanIf2fBsMib 4 }

wmanIf2fBsProvClassifierRuleEntry OBJECT-TYPE
        SYNTAX      WmanIf2fBsProvClassifierRuleEntry
        MAX-ACCESS  not-accessible
        STATUS      current
        DESCRIPTION
           "This table provides one row for each packet classifier
            rule."
        INDEX     { ifIndex,
                    wmanIf2fBsSsProvMacAddress,
                    wmanIf2fBsSfId,
                    wmanIf2fBsProvClsfRuleIndex }
        ::= { wmanIf2fBsProvClassifierRuleTable 1 }
```



```
WmanIf2fBsProvClassifierRuleEntry::= SEQUENCE {
        wmanIf2fBsProvClsfRuleIndex             Integer32,
        wmanIf2fBsProvClsfRulePriority          Integer32,
        wmanIf2fBsProvClsfRuleIpProtocol        Integer32,
        wmanIf2fBsProvClsfRuleIpSrcAddr         InetAddress,
        wmanIf2fBsProvClsfRuleIpSrcMask         InetAddress,
        wmanIf2fBsProvClsfRuleIpDestAddr        InetAddress,
        wmanIf2fBsProvClsfRuleIpDestMask        InetAddress,
        wmanIf2fBsProvClsfRuleSrcPortStart      Integer32,
        wmanIf2fBsProvClsfRuleSrcPortEnd        Integer32,
        wmanIf2fBsProvClsfRuleDestPortStart     Integer32,
        wmanIf2fBsProvClsfRuleDestPortEnd       Integer32,
        wmanIf2fBsProvClsfRuleDestMacAddr       MacAddress,
        wmanIf2fBsProvClsfRuleDestMacMask       MacAddress,
        wmanIf2fBsProvClsfRuleSrcMacAddr        MacAddress,
        wmanIf2fBsProvClsfRuleSrcMacMask        MacAddress,
        wmanIf2fBsProvClsfRuleEnetProtType      WmanIf2TcEthernetType,
        wmanIf2fBsProvClsfRuleEnetProtocol      Integer32,
        wmanIf2fBsProvClsfRuleUserPriLow        Integer32,
        wmanIf2fBsProvClsfRuleUserPriHigh       Integer32,
        wmanIf2fBsProvClsfRuleVlanId            Integer32,
        wmanIf2fBsProvClsfRuleAssociatedPhsi    Integer32,
        wmanIf2fBsProvClsfRuleIpv6FlowLabel     WmanIf2TcIpv6FlowLabel,
        wmanIf2fBsProvClsfRuleActionRule        WmanIf2TcActionRule,
        wmanIf2fBsProvClsfRuleIpTypeOfService   WmanIf2TcIpTypOfServ,
        wmanIf2fBsProvClsfRuleBitMap            WmanIf2TcClassifierMap,
        wmanIf2fBsProvClsfRuleRowStatus         RowStatus}

wmanIf2fBsProvClsfRuleIndex  OBJECT-TYPE
        SYNTAX      Integer32 (0 .. 65535)
        MAX-ACCESS  not-accessible
        STATUS      current
        DESCRIPTION
            "An index is assigned to a classifier in BS classifiers
             table"
        ::= { wmanIf2fBsProvClassifierRuleEntry 1 }

wmanIf2fBsProvClsfRulePriority OBJECT-TYPE
        SYNTAX      Integer32 (0 .. 255)
        MAX-ACCESS  read-create
        STATUS      current
        DESCRIPTION
            "The value specifies the priority for the Classifier, which
             is used for determining the order of the Classifier. A
             higher value indicates higher priority. Classifiers may
             have priorities in the range 0..255."
        REFERENCE
            "Subclause 11.13.18.3.3.1"
        DEFVAL      { 0 }
        ::= { wmanIf2fBsProvClassifierRuleEntry 2 }

wmanIf2fBsProvClsfRuleIpProtocol OBJECT-TYPE
        SYNTAX      Integer32 (0 .. 255)
        MAX-ACCESS  read-create
```

```
        STATUS      current
        DESCRIPTION
            "This object indicates the value of the IP Protocol field
             required for IP packets to match this rule. If the
             referenced parameter is not present in a classifier, this
             object reports the value of 0."
        REFERENCE
            "Subclause 11.13.18.3.3.3"
        ::= { wmanIf2fBsProvClassifierRuleEntry 3 }

wmanIf2fBsProvClsfRuleIpSrcAddr OBJECT-TYPE
        SYNTAX      InetAddress
        MAX-ACCESS  read-create
        STATUS      current
        DESCRIPTION
            "This object specifies the value of the IP Source Address
             required for packets to match this rule. An IP packet
             matches the rule when the packet ip source address bitwise
             ANDed with the wmanIf2fBsProvClsfRuleIpSrcMask value
             equals the wmanIf2fBsProvClsfRuleIpSrcAddr value."
        REFERENCE
            "Subclause 11.13.18.3.3.4"
        ::= { wmanIf2fBsProvClassifierRuleEntry 4 }

wmanIf2fBsProvClsfRuleIpSrcMask OBJECT-TYPE
        SYNTAX      InetAddress
        MAX-ACCESS  read-create
        STATUS      current
        DESCRIPTION
            "This object specifies which bits of a packet's IP Source
             Address that are compared to match this rule. An IP packet
             matches the rule when the packet source address bitwise
             ANDed with the
             wmanIf2fBsProvClsfRuleIpSrcMask value equals the
             wmanIf2fBsProvClsfRuleIpSrcAddr value."
        REFERENCE
            "Subclause 11.13.18.3.3.4"
        ::= { wmanIf2fBsProvClassifierRuleEntry 5 }

wmanIf2fBsProvClsfRuleIpDestAddr OBJECT-TYPE
        SYNTAX      InetAddress
        MAX-ACCESS  read-create
        STATUS      current
        DESCRIPTION
            "This object specifies the value of the IP Destination
             Address required for packets to match this rule. An IP
             packet matches the rule when the packet IP destination
             address bitwise ANDed with the
             wmanIf2fBsProvClsfRuleIpDestMask value equals the
             wmanIf2fBsProvClsfRuleIpDestAddr value."
        REFERENCE
            "Subclause 11.13.18.3.3.5"
        ::= { wmanIf2fBsProvClassifierRuleEntry 6 }
```



```
wmanIf2fBsProvClsfRuleIpDestMask OBJECT-TYPE
        SYNTAX      InetAddress
        MAX-ACCESS  read-create
        STATUS      current
        DESCRIPTION
            "This object specifies which bits of a packet's IP
             Destination Address that are compared to match this rule.
             An IP packet matches the rule when the packet destination
             address bitwise ANDed with the
             wmanIf2fBsProvClsfRuleIpDestMask value equals the
             wmanIf2fBsProvClsfRuleIpDestAddr value."
        REFERENCE
            "Subclause 11.13.18.3.3.5"
        ::= { wmanIf2fBsProvClassifierRuleEntry 7 }

wmanIf2fBsProvClsfRuleSrcPortStart OBJECT-TYPE
        SYNTAX      Integer32 (0..65535)
        MAX-ACCESS  read-create
        STATUS      current
        DESCRIPTION
            "This object specifies the low end inclusive range of
             TCP/UDP source port numbers to which a packet is compared.
             This object is irrelevant for non-TCP/UDP IP packets.
             If the referenced parameter is not present in a
             classifier, this object reports the value of 0."
        REFERENCE
            "Subclause 11.13.18.3.3.6"
        ::= { wmanIf2fBsProvClassifierRuleEntry 8 }

wmanIf2fBsProvClsfRuleSrcPortEnd OBJECT-TYPE
        SYNTAX      Integer32 (0 .. 65535)
        MAX-ACCESS  read-create
        STATUS      current
        DESCRIPTION
            "This object specifies the high end inclusive range of
             TCP/UDP source port numbers to which a packet is compared.
             This object is irrelevant for non-TCP/UDP IP packets.
             If the referenced parameter is not present in a classifier,
             this object reports the value of 65535."
        REFERENCE
            "Subclause 11.13.18.3.3.6"
        ::= { wmanIf2fBsProvClassifierRuleEntry 9 }

wmanIf2fBsProvClsfRuleDestPortStart OBJECT-TYPE
        SYNTAX      Integer32 (0 .. 65535)
        MAX-ACCESS  read-create
        STATUS      current
        DESCRIPTION
            "This object specifies the low end inclusive range of
             TCP/UDP destination port numbers to which a packet is
             compared. If the referenced parameter is not present in a
             classifier, this object reports the value of 0."
        REFERENCE
            "Subclause 11.13.18.3.3.7"
```

```
        ::= { wmanIf2fBsProvClassifierRuleEntry 10 }

wmanIf2fBsProvClsfRuleDestPortEnd OBJECT-TYPE
        SYNTAX      Integer32 (0 .. 65535)
        MAX-ACCESS  read-create
        STATUS      current
        DESCRIPTION
            "This object specifies the high end inclusive range of
             TCP/UDP destination port numbers to which a packet is
             compared. If the referenced parameter is not present in a
             classifier, this object reports the value of 65535."
        REFERENCE
            "Subclause 11.13.18.3.3.7"
        ::= { wmanIf2fBsProvClassifierRuleEntry 11 }

wmanIf2fBsProvClsfRuleDestMacAddr OBJECT-TYPE
        SYNTAX      MacAddress
        MAX-ACCESS  read-create
        STATUS      current
        DESCRIPTION
            "An Ethernet packet matches an entry when its destination
             MAC address bitwise ANDed with
             wmanIf2fBsProvClsfRuleDestMacMask equals the value of
             wmanIf2fBsProvClsfRuleDestMacAddr."
        REFERENCE
            "Subclause 11.13.18.3.3.8"
        ::= { wmanIf2fBsProvClassifierRuleEntry 12 }

wmanIf2fBsProvClsfRuleDestMacMask OBJECT-TYPE
        SYNTAX      MacAddress
        MAX-ACCESS  read-create
        STATUS      current
        DESCRIPTION
            "An Ethernet packet matches an entry when its destination
             MAC address bitwise ANDed with
             wmanIf2fBsProvClsfRuleDestMacMask equals the value of
             wmanIf2fBsProvClsfRuleDestMacAddr."
        REFERENCE
            "Subclause 11.13.18.3.3.8"
        ::= { wmanIf2fBsProvClassifierRuleEntry 13 }

wmanIf2fBsProvClsfRuleSrcMacAddr OBJECT-TYPE
        SYNTAX      MacAddress
        MAX-ACCESS  read-create
        STATUS      current
        DESCRIPTION
            "An Ethernet packet matches this entry when its source
             MAC address  bitwise ANDed with
             wmanIf2fBsProvClsfRuleSrcMacMask equals the value
             of wmanIf2fBsProvClsfRuleSrcMacAddr."
        REFERENCE
            "Subclause 11.13.18.3.3.9"
        ::= { wmanIf2fBsProvClassifierRuleEntry 14 }
```



```
wmanIf2fBsProvClsfRuleSrcMacMask OBJECT-TYPE
        SYNTAX      MacAddress
        MAX-ACCESS  read-create
        STATUS      current
        DESCRIPTION
            "An Ethernet packet matches an entry when its source
             MAC address bitwise ANDed with
             wmanIf2fBsProvClsfRuleSrcMacMask equals the value of
             wmanIf2fBsProvClsfRuleSrcMacAddr."
        REFERENCE
            "Subclause 11.13.18.3.3.9"
        ::= { wmanIf2fBsProvClassifierRuleEntry 15 }

wmanIf2fBsProvClsfRuleEnetProtType OBJECT-TYPE
        SYNTAX      WmanIf2TcEthernetType
        MAX-ACCESS  read-create
        STATUS      current
        DESCRIPTION
            "This object indicates the format of the layer 3 protocol
             id in the Ethernet packet. A value of none(0) means that
             the rule does not use the layer 3 protocol type as a
             matching criteria. A value of ethertype(1) means that the
             rule applies only to frames which contains an EtherType
             value. Ethertype values are contained in packets using
             the Dec-Intel-Xerox (DIX) encapsulation or the RFC1042
             Sub-Network Access Protocol (SNAP) encapsulation formats.
             A value of dsap(2) means that the rule applies only to
             frames using the IEEE802.3 encapsulation format with a
             Destination Service Access Point (DSAP) other than 0xAA
             (which is reserved for SNAP). If the Ethernet frame
             contains an 802.1P/Q Tag header (i.e. EtherType 0x8100),
             this object applies to the embedded EtherType field within
             the 802.1P/Q header. If the referenced parameter is not
             present in a classifier, this object reports the value of
             0."
        REFERENCE
            "Subclause 11.13.18.3.3.10"
        ::= { wmanIf2fBsProvClassifierRuleEntry 16 }

wmanIf2fBsProvClsfRuleEnetProtocol OBJECT-TYPE
        SYNTAX      Integer32 (0..65535)
        MAX-ACCESS  read-create
        STATUS      current
        DESCRIPTION
            "If wmanIf2fBsProvClsfRuleEnetProtocolType is none(0),
             this object is ignored when considering whether a packet
             matches the current rule.
             If wmanIf2fBsProvClsfRuleEnetProtocolType is ethertype(1),
             this object gives the 16-bit value of the EtherType that
             the packet must match in order to match the rule.
             If wmanIf2fBsProvClsfRuleEnetProtocolType is dsap(2), the
             lower 8 bits of this object's value must match the DSAP
             byte of the packet in order to match the rule.
             If the Ethernet frame contains an 802.1P/Q Tag header
```

```
             (i.e. EtherType 0x8100), this object applies to the
             embedded EtherType field within the 802.1P/Q header.
             If the referenced parameter is not present in the
             classifier, the value of this object is reported as 0."
        REFERENCE
            "Subclause 11.13.18.3.3.10"
        ::= { wmanIf2fBsProvClassifierRuleEntry 17 }

wmanIf2fBsProvClsfRuleUserPriLow OBJECT-TYPE
        SYNTAX      Integer32 (0..7)
        MAX-ACCESS  read-create
        STATUS      current
        DESCRIPTION
            "This object applies only to Ethernet frames using the
             802.1P/Q tag header (indicated with EtherType 0x8100).
             Such frames include a 16-bit Tag that contains a 3 bit
             Priority field and a 12 bit VLAN number.
             Tagged Ethernet packets must have a 3-bit Priority field
             within the range of wmanIf2fBsProvClsfRuleUserPriLow and
             wmanIf2fBsProvClsfRuleUserPriHigh in order to match this
             rule."
        REFERENCE
            "Subclause 11.13.18.3.3.11"
        ::= { wmanIf2fBsProvClassifierRuleEntry 18 }

wmanIf2fBsProvClsfRuleUserPriHigh OBJECT-TYPE
        SYNTAX      Integer32 (0..7)
        MAX-ACCESS  read-create
        STATUS      current
        DESCRIPTION
            "This object applies only to Ethernet frames using the
             802.1P/Q tag header (indicated with EtherType 0x8100).
             Such frames include a 16-bit Tag that contains a 3 bit
             Priority field and a 12 bit VLAN number.
             Tagged Ethernet packets must have a 3-bit Priority
             field within the range of wmanIf2fBsProvClsfRuleUserPriLow
             and wmanIf2fBsProvClsfRuleUserPriHigh in order to match
             this rule."
        REFERENCE
            "Subclause 11.13.18.3.3.11"
        ::= { wmanIf2fBsProvClassifierRuleEntry 19 }

wmanIf2fBsProvClsfRuleVlanId OBJECT-TYPE
        SYNTAX      Integer32 (0..4095)
        MAX-ACCESS  read-create
        STATUS      current
        DESCRIPTION
            "This object applies only to Ethernet frames using the
             802.1P/Q tag header.
             If this object's value is nonzero, tagged packets must
             have a VLAN Identifier that matches the value in order
             to match the rule.
             Only the least significant 12 bits of this object's
             value are valid."
```



```
        REFERENCE
            "Subclause 11.13.18.3.3.12"
        ::= { wmanIf2fBsProvClassifierRuleEntry 20 }

wmanIf2fBsProvClsfRuleAssociatedPhsi OBJECT-TYPE
        SYNTAX      Integer32 (1..255)
        MAX-ACCESS  read-create
        STATUS      current
        DESCRIPTION
            "The Associated PHSI has a value between 1 and 255, which
             shall mirror the PHSI value of a PHS rule. Packets matching
             the Packet Classification Rule containing the Associated
             PHSI parameter shall undergo PHS according to the
             corresponding PHS rule. A value '0' indicates that no PHS
             rule is associated with this classifier rule."
        REFERENCE
            "Subclause 11.13.18.3.3.13"
        ::= { wmanIf2fBsProvClassifierRuleEntry 21 }

wmanIf2fBsProvClsfRuleIpv6FlowLabel OBJECT-TYPE
        SYNTAX      WmanIf2TcIpv6FlowLabel
        MAX-ACCESS  read-create
        STATUS      current
        DESCRIPTION
            "The value of this field specifies the matching values for
             the IPv6 Flow label field."
        REFERENCE
            "Subclause 11.13.18.3.3.16"
        ::= { wmanIf2fBsProvClassifierRuleEntry 22 }

wmanIf2fBsProvClsfRuleActionRule OBJECT-TYPE
        SYNTAX      WmanIf2TcActionRule
        MAX-ACCESS  read-create
        STATUS      current
        DESCRIPTION
            "The value of this field specifies an action associated with
             the classifier rule. If this classification action rule
             exists, its action shall be applied on the packets that
             match this classifier rule."
        REFERENCE
            "Subclause 11.13.18.3.3.17"
        ::= { wmanIf2fBsProvClassifierRuleEntry 23 }

wmanIf2fBsProvClsfRuleIpTypeOfService OBJECT-TYPE
        SYNTAX      WmanIf2TcIpTypOfServ
        MAX-ACCESS  read-only
        STATUS      current
        DESCRIPTION
            "The value of this TLV specifies the matching parameters for
             the IP Type of Service (TOS) octet. The 6 MSBs shall be set
             to a Differentiated Service Codepoint (DSCP), as specified
             by RFC 2474,"
        REFERENCE
            "Subclause 11.13.18.3.3.18"
```

```
        ::= { wmanIf2fBsProvClassifierRuleEntry 24 }

wmanIf2fBsProvClsfRuleBitMap OBJECT-TYPE
        SYNTAX      WmanIf2TcClassifierMap
        MAX-ACCESS  read-create
        STATUS      current
        DESCRIPTION
            "This object indicates which parameter encodings were
             actually present in the entry. A bit set to '1' indicates
             the corresponding classifier encoding is present, and '0'
             means otherwise"
        ::= { wmanIf2fBsProvClassifierRuleEntry 25 }

wmanIf2fBsProvClsfRuleRowStatus OBJECT-TYPE
        SYNTAX      RowStatus
        MAX-ACCESS  read-create
        STATUS      current
        DESCRIPTION
            "This object is used to create a new row or modify or
             delete an existing row in this table.

             If the implementator of this MIB has choosen not
             to implement 'dynamic assignment' of profiles, this
             object is not useful and should return noSuchName
             upon SNMP request."
        ::= { wmanIf2fBsProvClassifierRuleEntry 26 }

wmanIf2fBsProvPhsRuleTable OBJECT-TYPE
        SYNTAX      SEQUENCE OF WmanIf2fBsProvPhsRuleEntry
        MAX-ACCESS  not-accessible
        STATUS      current
        DESCRIPTION
            "This table contains provisioned PHS rules. Each entry
             contains the data of the header to be suppressed along with
             its identification - PHSI. The classifier uniquely maps
             packets to its associated PHS Rule. The receiving entity
             uses the CID and the PHSI to restore the PHSF. Once a PHSF
             has been assigned to a PHSI, it shall not be changed. To
             change the value of a PHSF on a service flow, a new PHS
             rule shall be defined, the old rule is removed from the
             service flow, and the new rule is added. When all
             classification rules associated with the PHS rule are
             deleted, then the PHS rule shall also be deleted."
        REFERENCE
            "Subclause 5.2.3"
        ::= { wmanIf2fBsMib 5 }

wmanIf2fBsProvPhsRuleEntry OBJECT-TYPE
        SYNTAX      WmanIf2fBsProvPhsRuleEntry
        MAX-ACCESS  not-accessible
        STATUS      current
        DESCRIPTION
            "This table provides one row for each PHS rule created
             dynamically by the BS and SS on a given service flow. The
```



```
             PHS rule is defined by the pair (PHSS, PHSM) for each
             distinct header data."
        INDEX     { ifIndex,
                    wmanIf2fBsSsProvMacAddress,
                    wmanIf2fBsSfId,
                    wmanIf2fBsProvPhsRulePhsIndex }
        ::= { wmanIf2fBsProvPhsRuleTable 1 }

WmanIf2fBsProvPhsRuleEntry::= SEQUENCE {
        wmanIf2fBsProvPhsRulePhsIndex           Integer32,
        wmanIf2fBsProvPhsRulePhsField           OCTET STRING,
        wmanIf2fBsProvPhsRulePhsMask            OCTET STRING,
        wmanIf2fBsProvPhsRulePhsSize            Integer32,
        wmanIf2fBsProvPhsRulePhsVerify          WmanIf2TcPhsRuleVerify,
        wmanIf2fBsProvPhsRuleRowStatus          RowStatus}

wmanIf2fBsProvPhsRulePhsIndex OBJECT-TYPE
        SYNTAX      Integer32 (1..255)
        MAX-ACCESS  not-accessible
        STATUS      current
        DESCRIPTION
            "The PHSI (PHS Index) has a value between 1 and 255, which
             uniquely references the suppressed byte string. The index
             is unique per service flow. The uplink and downlink PHSI
             values are independent of each other."
        REFERENCE
            "Subclause 11.13.18.3.5.1"
        ::= { wmanIf2fBsProvPhsRuleEntry 1 }

wmanIf2fBsProvPhsRulePhsField OBJECT-TYPE
        SYNTAX      OCTET STRING (SIZE(0..65535))
        MAX-ACCESS  read-create
        STATUS      current
        DESCRIPTION
            "The PHSF (PHS Field) is a string of bytes containing the
             header information to be suppressed by the sending CS and
             reconstructed by the receiving CS. The most significant
             byte of the string corresponds to the first byte of the
             CS-SDU."
        REFERENCE
            "Subclause 11.13.18.3.5.2"
        ::= { wmanIf2fBsProvPhsRuleEntry 2 }

wmanIf2fBsProvPhsRulePhsMask OBJECT-TYPE
        SYNTAX      OCTET STRING (SIZE(0..65535))
        MAX-ACCESS  read-create
        STATUS      current
        DESCRIPTION
            "The PHSM An 8-bit mask that indicates which bytes in the
             PHS Field (PHSF) to suppress and which bytes to not
             suppress. The PHSM allows fields, such as sequence numbers
             or checksums (which vary in value), to be excluded from
             suppression with the constant bytes around them suppressed.
             It is encodded as follows:
```

```
             bit 0:
                0 = don't suppress the 1st byte of the suppression field
                1 = suppress first byte of the suppression field
             bit 1:
                0 = don't suppress the 2nd byte of the suppression field
                1 = suppress second byte of the suppression field
             bit x:
                0 = don't suppress the (x+1) byte of the suppression
                    field
                1 = suppress (x+1) byte of the suppression field
             where the length of the octet string is ceiling
             (wmanIf2fBsProvPhsRulePhsSize/8)."
        REFERENCE
            "Subclause 11.13.18.3.5.3"
        ::= { wmanIf2fBsProvPhsRuleEntry 3 }

wmanIf2fBsProvPhsRulePhsSize OBJECT-TYPE
        SYNTAX      Integer32 (0..255)
        UNITS       "byte"
        MAX-ACCESS  read-create
        STATUS      current
        DESCRIPTION
            "The value of this field - PHSS is the total number of bytes
             in the header to be suppressed and then restored in a
             service flow that uses PHS."
        REFERENCE
            "Subclause 11.13.18.3.5.4"
        DEFVAL      {0}
        ::= { wmanIf2fBsProvPhsRuleEntry 4 }

wmanIf2fBsProvPhsRulePhsVerify OBJECT-TYPE
        SYNTAX      WmanIf2TcPhsRuleVerify
        MAX-ACCESS  read-create
        STATUS      current
        DESCRIPTION
            "The value of this field indicates to the sending entity
             whether or not the packet header contents are to be
             verified prior to performing suppression."
        DEFVAL      { phsVerifyEnable }
        ::= { wmanIf2fBsProvPhsRuleEntry 5 }

wmanIf2fBsProvPhsRuleRowStatus OBJECT-TYPE
        SYNTAX      RowStatus
        MAX-ACCESS  read-create
        STATUS      current
        DESCRIPTION
            "Row status."
        ::= { wmanIf2fBsProvPhsRuleEntry 6 }

wmanIf2fBsClassifierRuleTable OBJECT-TYPE
        SYNTAX      SEQUENCE OF WmanIf2fBsClassifierRuleEntry
        MAX-ACCESS  not-accessible
        STATUS      current
        DESCRIPTION
```



```
            "This table contains packet classifier rules associated
             with created service flows."
        ::= { wmanIf2fBsMib 6 }

wmanIf2fBsClassifierRuleEntry OBJECT-TYPE
        SYNTAX      WmanIf2fBsClassifierRuleEntry
        MAX-ACCESS  not-accessible
        STATUS      current
        DESCRIPTION
            "This table provides one row for each packet classifier
             rule."
        INDEX     { ifIndex,
                    wmanIf2fBsSfMacAddress,
                    wmanIf2fBsSfId,
                    wmanIf2fBsClassifierRuleIndex }
        ::= { wmanIf2fBsClassifierRuleTable 1 }

WmanIf2fBsClassifierRuleEntry ::= SEQUENCE {
        wmanIf2fBsClassifierRuleIndex           Integer32,
        wmanIf2fBsClassifierRulePriority        Integer32,
        wmanIf2fBsClassifierRuleIpProtocol      Integer32,
        wmanIf2fBsClassifierRuleIpSourceAddr    InetAddress,
        wmanIf2fBsClassifierRuleIpSourceMask    InetAddress,
        wmanIf2fBsClassifierRuleIpDestAddr      InetAddress,
        wmanIf2fBsClassifierRuleIpDestMask      InetAddress,
        wmanIf2fBsClassifierRuleSourcePortStart Integer32,
        wmanIf2fBsClassifierRuleSourcePortEnd   Integer32,
        wmanIf2fBsClassifierRuleDestPortStart   Integer32,
        wmanIf2fBsClassifierRuleDestPortEnd     Integer32,
        wmanIf2fBsClassifierRuleDestMacAddr     MacAddress,
        wmanIf2fBsClassifierRuleDestMacMask     MacAddress,
        wmanIf2fBsClassifierRuleSourceMacAddr   MacAddress,
        wmanIf2fBsClassifierRuleSourceMacMask   MacAddress,
        wmanIf2fBsClassifierRuleEnetProtocolTyp WmanIf2TcEthernetType,
        wmanIf2fBsClassifierRuleEnetProtocol    Integer32,
        wmanIf2fBsClassifierRuleUserPriLow      Integer32,
        wmanIf2fBsClassifierRuleUserPriHigh     Integer32,
        wmanIf2fBsClassifierRuleVlanId          Integer32,
        wmanIf2fBsClassifierRuleAssociatedPhsi  Integer32,
        wmanIf2fBsClassifierRuleIpv6FlowLabel   WmanIf2TcIpv6FlowLabel,
        wmanIf2fBsClassifierRuleActionRule      WmanIf2TcActionRule,
        wmanIf2fBsClassifierRuleIpTypeOfService WmanIf2TcIpTypOfServ,
        wmanIf2fBsClassifierRuleBitMap          WmanIf2TcClassifierMap,
        wmanIf2fBsClassifierRulePkts            Counter64}

wmanIf2fBsClassifierRuleIndex OBJECT-TYPE
        SYNTAX      Integer32 (0 .. 65535)
        MAX-ACCESS  not-accessible
        STATUS      current
        DESCRIPTION
            "An index is assigned to each classifier in the classifiers
             table"
        REFERENCE
            "Subclause 11.13.18.3.3.14"
```

```
        ::= { wmanIf2fBsClassifierRuleEntry 1 }

wmanIf2fBsClassifierRulePriority OBJECT-TYPE
        SYNTAX      Integer32 (0 .. 255)
        MAX-ACCESS  read-only
        STATUS      current
        DESCRIPTION
            "The value specifies the order of evaluation of the
             classifiers. The higher the value the higher the
             priority. The value of 0 is used as default in
             provisioned service flows classifiers. The default
             value of 64 is used for dynamic service flow classifiers.
             If the referenced parameter is not present in a classifier
             , this object reports the default value as defined above"
        REFERENCE
            "Subclause 11.13.18.3.3.1"
        DEFVAL    { 0 }
        ::= { wmanIf2fBsClassifierRuleEntry 2 }

wmanIf2fBsClassifierRuleIpProtocol OBJECT-TYPE
        SYNTAX      Integer32 (0 .. 255)
        MAX-ACCESS  read-only
        STATUS      current
        DESCRIPTION
            "This object indicates the value of the IP Protocol field
             required for IP packets to match this rule."
        REFERENCE
            "Subclause 11.13.18.3.3.3"
        ::= { wmanIf2fBsClassifierRuleEntry 3 }

wmanIf2fBsClassifierRuleIpSourceAddr OBJECT-TYPE
        SYNTAX      InetAddress
        MAX-ACCESS  read-only
        STATUS      current
        DESCRIPTION
            "This object specifies the value of the IP Source Address
             required for packets to match this rule. An IP packet
             matches the rule when the packet ip source address bitwise
             ANDed with the wmanIf2CmnClassifierRuleIpSourceMask value
             equals the wmanIf2CmnClassifierRuleIpSourceAddr value."
        REFERENCE
            "Subclause 11.13.18.3.3.4"
        ::= { wmanIf2fBsClassifierRuleEntry 4 }

wmanIf2fBsClassifierRuleIpSourceMask OBJECT-TYPE
        SYNTAX      InetAddress
        MAX-ACCESS  read-only
        STATUS      current
        DESCRIPTION
            "This object specifies which bits of a packet's IP Source
             Address that are compared to match this rule. An IP packet
             matches the rule when the packet source address bitwise
             ANDed with the
             wmanIf2CmnClassifierRuleIpSourceMask value equals the
```



```
             wmanIf2CmnClassifierRuleIpSourceAddr value."
        REFERENCE
            "Subclause 11.13.18.3.3.4"
        ::= { wmanIf2fBsClassifierRuleEntry 5 }

wmanIf2fBsClassifierRuleIpDestAddr OBJECT-TYPE
        SYNTAX      InetAddress
        MAX-ACCESS  read-only
        STATUS      current
        DESCRIPTION
            "This object specifies the value of the IP Destination
             Address required for packets to match this rule. An IP
             packet matches the rule when the packet IP destination
             address bitwise ANDed with the
             wmanIf2CmnClassifierRuleIpDestMask value equals the
             wmanIf2CmnClassifierRuleIpDestAddr value."
        REFERENCE
            "Subclause 11.13.18.3.3.5"
        ::= { wmanIf2fBsClassifierRuleEntry 6 }

wmanIf2fBsClassifierRuleIpDestMask OBJECT-TYPE
        SYNTAX      InetAddress
        MAX-ACCESS  read-only
        STATUS      current
        DESCRIPTION
            "This object specifies which bits of a packet's IP
             Destination Address that are compared to match this rule.
             An IP packet matches the rule when the packet destination
             address bitwise ANDed with the
             wmanIf2CmnClassifierRuleIpDestMask value equals the
             wmanIf2CmnClassifierRuleIpDestAddr value."
        REFERENCE
            "Subclause 11.13.18.3.3.5"
        ::= { wmanIf2fBsClassifierRuleEntry 7 }

wmanIf2fBsClassifierRuleSourcePortStart OBJECT-TYPE
        SYNTAX      Integer32 (0 .. 65535)
        MAX-ACCESS  read-only
        STATUS      current
        DESCRIPTION
            "This object specifies the low end inclusive range of
             TCP/UDP source port numbers to which a packet is compared
             . This object is irrelevant for non-TCP/UDP IP packets."
        REFERENCE
            "Subclause 11.13.18.3.3.6"
        ::= { wmanIf2fBsClassifierRuleEntry 8 }

wmanIf2fBsClassifierRuleSourcePortEnd OBJECT-TYPE
        SYNTAX      Integer32 (0 .. 65535)
        MAX-ACCESS  read-only
        STATUS      current
        DESCRIPTION
            "This object specifies the high end inclusive range of
             TCP/UDP source port numbers to which a packet is compared.
```

```
             This object is irrelevant for non-TCP/UDP IP packets."
        REFERENCE
            "Subclause 11.13.18.3.3.6"
        ::= { wmanIf2fBsClassifierRuleEntry 9 }

wmanIf2fBsClassifierRuleDestPortStart OBJECT-TYPE
        SYNTAX      Integer32 (0 .. 65535)
        MAX-ACCESS  read-only
        STATUS      current
        DESCRIPTION
            "This object specifies the low end inclusive range of
             TCP/UDP destination port numbers to which a packet is
             compared."
        REFERENCE
            "Subclause 11.13.18.3.3.7"
        ::= { wmanIf2fBsClassifierRuleEntry 10 }

wmanIf2fBsClassifierRuleDestPortEnd OBJECT-TYPE
        SYNTAX      Integer32 (0 .. 65535)
        MAX-ACCESS  read-only
        STATUS      current
        DESCRIPTION
            "This object specifies the high end inclusive range of
             TCP/UDP destination port numbers to which a packet is
             compared."
        REFERENCE
            "Subclause 11.13.18.3.3.7"
        ::= { wmanIf2fBsClassifierRuleEntry 11 }

wmanIf2fBsClassifierRuleDestMacAddr OBJECT-TYPE
        SYNTAX      MacAddress
        MAX-ACCESS  read-only
        STATUS      current
        DESCRIPTION
            "An Ethernet packet matches an entry when its destination
             MAC address bitwise ANDed with
             wmanIf2CmnClassifierRuleDestMacMask equals the value of
             wmanIf2CmnClassifierRuleDestMacAddr."
        REFERENCE
            "Subclause 11.13.18.3.3.8"
        ::= { wmanIf2fBsClassifierRuleEntry 12 }

wmanIf2fBsClassifierRuleDestMacMask OBJECT-TYPE
        SYNTAX      MacAddress
        MAX-ACCESS  read-only
        STATUS      current
        DESCRIPTION
            "An Ethernet packet matches an entry when its destination
             MAC address bitwise ANDed with
             wmanIf2CmnClassifierRuleDestMacMask equals the value of
             wmanIf2CmnClassifierRuleDestMacAddr."
        REFERENCE
            "Subclause 11.13.18.3.3.8"
        ::= { wmanIf2fBsClassifierRuleEntry 13 }
```



```
wmanIf2fBsClassifierRuleSourceMacAddr OBJECT-TYPE
        SYNTAX      MacAddress
        MAX-ACCESS  read-only
        STATUS      current
        DESCRIPTION
            "An Ethernet packet matches this entry when its source
             MAC address  bitwise ANDed with
             wmanIf2CmnClassifierRuleSourceMacMask equals the value
             of wmanIf2CmnClassifierRuleSourceMacAddr."
        REFERENCE
            "Subclause 11.13.18.3.3.9"
        ::= { wmanIf2fBsClassifierRuleEntry 14 }

wmanIf2fBsClassifierRuleSourceMacMask OBJECT-TYPE
        SYNTAX      MacAddress
        MAX-ACCESS  read-only
        STATUS      current
        DESCRIPTION
            "An Ethernet packet matches an entry when its destination
             MAC address bitwise ANDed with
             wmanIf2CmnClassifierRuleSourceMacMask equals the value of
             wmanIf2CmnClassifierRuleSourceMacAddr."
        REFERENCE
            "Subclause 11.13.18.3.3.9"
        ::= { wmanIf2fBsClassifierRuleEntry 15 }

wmanIf2fBsClassifierRuleEnetProtocolTyp OBJECT-TYPE
        SYNTAX      WmanIf2TcEthernetType
        MAX-ACCESS  read-only
        STATUS      current
        DESCRIPTION
            "This object indicates the format of the layer 3 protocol
             id in the Ethernet packet. A value of none(0) means that
             the rule does not use the layer 3 protocol type as a
             matching criteria. A value of ethertype(1) means that the
             rule applies only to frames which contains an EtherType
             value. Ethertype values are contained in packets using
             the Dec-Intel-Xerox (DIX) encapsulation or the RFC1042
             Sub-Network Access Protocol (SNAP) encapsulation formats.
             A value of dsap(2) means that the rule applies only to
             frames using the IEEE802.3 encapsulation format with a
             Destination Service Access Point (DSAP) other than 0xAA
             (which is reserved for SNAP). If the Ethernet frame
             contains an 802.1P/Q Tag header (i.e. EtherType 0x8100),
             this object applies to the embedded EtherType field within
             the 802.1P/Q header. If the referenced parameter is not
             present in a classifier, this object reports the value of
             0."
        REFERENCE
            "Subclause 11.13.18.3.3.10"
        ::= { wmanIf2fBsClassifierRuleEntry 16 }

wmanIf2fBsClassifierRuleEnetProtocol OBJECT-TYPE
```

```
        SYNTAX      Integer32 (0..65535)
        MAX-ACCESS  read-only
        STATUS      current
        DESCRIPTION
            "If wmanIf2CmnClassifierRuleEnetProtocolTyp is none(0),
             this object is ignored when considering whether a packet
             matches the current rule.
             If wmanIf2CmnClassifierRuleEnetProtocolTyp is ethertype(1)
             ,this object gives the 16-bit value of the EtherType that
             the packet must match in order to match the rule.
             If wmanIf2CmnClassifierRuleEnetProtocolTyp is dsap(2), the
             lower 8 bits of this object's value must match the DSAP
             byte of the packet in order to match the rule.
             If the Ethernet frame contains an 802.1P/Q Tag header
             (i.e. EtherType 0x8100), this object applies to the
             embedded EtherType field within the 802.1P/Q header.
             If the referenced parameter is not present in the
             classifier, the value of this object is reported as 0."
        REFERENCE
            "Subclause 11.13.18.3.3.10"
        ::= { wmanIf2fBsClassifierRuleEntry 17 }

wmanIf2fBsClassifierRuleUserPriLow OBJECT-TYPE
        SYNTAX      Integer32 (0..7)
        MAX-ACCESS  read-only
        STATUS      current
        DESCRIPTION
            "This object applies only to Ethernet frames using the
             802.1P/Q tag header (indicated with EtherType 0x8100).
             Such frames include a 16-bit Tag that contains a 3 bit
             Priority field and a 12 bit VLAN number.
             Tagged Ethernet packets must have a 3-bit Priority field
             within the range of wmanIf2CmnClassifierRulePriLow and
             wmanIf2CmnClassifierRulePriHigh in order to match this
             rule."
        REFERENCE
            "Subclause 11.13.18.3.3.11"
        ::= { wmanIf2fBsClassifierRuleEntry 18 }

wmanIf2fBsClassifierRuleUserPriHigh OBJECT-TYPE
        SYNTAX      Integer32 (0..7)
        MAX-ACCESS  read-only
        STATUS      current
        DESCRIPTION
            "This object applies only to Ethernet frames using the
             802.1P/Q tag header (indicated with EtherType 0x8100).
             Such frames include a 16-bit Tag that contains a 3 bit
             Priority field and a 12 bit VLAN number.
             Tagged Ethernet packets must have a 3-bit Priority
             field within the range of wmanIf2CmnClassifierRulePriLow
             and wmanIf2CmnClassifierRulePriHigh in order to match
             this rule."
        REFERENCE
            "Subclause 11.13.18.3.3.11"
```



```
        ::= { wmanIf2fBsClassifierRuleEntry 19 }

wmanIf2fBsClassifierRuleVlanId OBJECT-TYPE
        SYNTAX      Integer32 (0..4095)
        MAX-ACCESS  read-only
        STATUS      current
        DESCRIPTION
            "This object applies only to Ethernet frames using the
             802.1P/Q tag header.
             If this object's value is nonzero, tagged packets must
             have a VLAN Identifier that matches the value in order
             to match the rule.
             Only the least significant 12 bits of this object's
             value are valid."
        REFERENCE
            "Subclause 11.13.18.3.3.12"
        ::= { wmanIf2fBsClassifierRuleEntry 20 }

wmanIf2fBsClassifierRuleAssociatedPhsi OBJECT-TYPE
        SYNTAX      Integer32 (1..255)
        MAX-ACCESS  read-only
        STATUS      current
        DESCRIPTION
            "The Associated PHSI has a value between 1 and 255, which
             shall mirror the PHSI value of a PHS rule. Packets matching
             the Packet Classification Rule containing the Associated
             PHSI parameter shall undergo PHS according to the
             corresponding PHS rule. A value '0' indicates that no PHS
             rule is associated with this classifier rule."
        REFERENCE
            "Subclause 11.13.18.3.3.13"
        ::= { wmanIf2fBsClassifierRuleEntry 21 }

wmanIf2fBsClassifierRuleIpv6FlowLabel OBJECT-TYPE
        SYNTAX      WmanIf2TcIpv6FlowLabel
        MAX-ACCESS  read-only
        STATUS      current
        DESCRIPTION
            "The value of this field specifies the matching values for
             the IPv6 Flow label field."
        REFERENCE
            "Subclause 11.13.18.3.3.16"
        ::= { wmanIf2fBsClassifierRuleEntry 22 }

wmanIf2fBsClassifierRuleActionRule OBJECT-TYPE
        SYNTAX      WmanIf2TcActionRule
        MAX-ACCESS  read-only
        STATUS      current
        DESCRIPTION
            "The value of this field specifies an action associated with
             the classifier rule. If this classification action rule
             exists, its action shall be applied on the packets that
             match this classifier rule."
        REFERENCE
```

```
            "Subclause 11.13.18.3.3.17"
        ::= { wmanIf2fBsClassifierRuleEntry 23 }

wmanIf2fBsClassifierRuleIpTypeOfService OBJECT-TYPE
        SYNTAX      WmanIf2TcIpTypOfServ
        MAX-ACCESS  read-only
        STATUS      current
        DESCRIPTION
            "The value of this TLV specifies the matching parameters for
             the IP Type of Service (TOS) octet. The 6 MSBs shall be set
             to a Differentiated Service Codepoint (DSCP), as specified
             by RFC 2474,"
        REFERENCE
            "Subclause 11.13.18.3.3.18"
        ::= { wmanIf2fBsClassifierRuleEntry 24 }

wmanIf2fBsClassifierRuleBitMap OBJECT-TYPE
        SYNTAX      WmanIf2TcClassifierMap
        MAX-ACCESS  read-only
        STATUS      current
        DESCRIPTION
            "This object indicates which parameter encodings were
             actually present in the entry. A bit set to '1' indicates
             the corresponding classifier encoding is present, and '0'
             means otherwise"
        ::= { wmanIf2fBsClassifierRuleEntry 25 }

wmanIf2fBsClassifierRulePkts OBJECT-TYPE
        SYNTAX      Counter64
        MAX-ACCESS  read-only
        STATUS      current
        DESCRIPTION
            "This object counts the number of packets that have
             been classified using this entry."
        ::= { wmanIf2fBsClassifierRuleEntry 26 }

wmanIf2fBsPhsRuleTable OBJECT-TYPE
        SYNTAX      SEQUENCE OF WmanIf2fBsPhsRuleEntry
        MAX-ACCESS  not-accessible
        STATUS      current
        DESCRIPTION
            "This table contains PHS rule dictionary entries. Each
             entry contains the data of the header to be suppressed
             along with its identification - PHSI. The classifier
             uniquely maps packets to its associated PHS Rule. The
             receiving entity uses the CID and the PHSI to restore the
             PHSF. Once a PHSF has been assigned to a PHSI, it shall
             not be changed. To change the value of a PHSF on a
             service flow, a new PHS rule shall be defined, the old
             rule is removed from the service flow, and the new rule
             is added. When a classifier is deleted, any associated
             PHS rule shall also be deleted."
        REFERENCE
            "Subclause 5.2.3"
        ::= { wmanIf2fBsMib 7 }
```



```
wmanIf2fBsPhsRuleEntry OBJECT-TYPE
        SYNTAX      WmanIf2fBsPhsRuleEntry
        MAX-ACCESS  not-accessible
        STATUS      current
        DESCRIPTION
            "This table provides one row for each PHS rule created
             dynamically by the BS and SS on a given service flow. The
             PHS rule is defined by the pair (PHSS, PHSM) for each
             distinct header data."
        INDEX     { ifIndex,
                    wmanIf2fBsSfMacAddress,
                    wmanIf2fBsSfCid,
                    wmanIf2fBsPhsRulePhsIndex }
        ::= { wmanIf2fBsPhsRuleTable 1 }

WmanIf2fBsPhsRuleEntry ::= SEQUENCE {
        wmanIf2fBsPhsRulePhsIndex               Integer32,
        wmanIf2fBsPhsRulePhsField               OCTET STRING,
        wmanIf2fBsPhsRulePhsMask                OCTET STRING,
        wmanIf2fBsPhsRulePhsSize                Integer32,
        wmanIf2fBsPhsRulePhsVerify              WmanIf2TcPhsRuleVerify}

wmanIf2fBsPhsRulePhsIndex OBJECT-TYPE
        SYNTAX      Integer32 (1..255)
        MAX-ACCESS  not-accessible
        STATUS      current
        DESCRIPTION
            "The PHSI (PHS Index) has a value between 1 and 255, which
             uniquely references the suppressed byte string. The index
             is unique per service flow. The uplink and downlink PHSI
             values are independent of each other."
        REFERENCE
            "Subclause 11.13.18.3.5.1"
        ::= { wmanIf2fBsPhsRuleEntry 1 }

wmanIf2fBsPhsRulePhsField OBJECT-TYPE
        SYNTAX      OCTET STRING (SIZE (0..65535))
        MAX-ACCESS  read-only
        STATUS      current
        DESCRIPTION
            "The PHSF (PHS Field) is a string of bytes containing the
             header information to be suppressed by the sending CS and
             reconstructed by the receiving CS. The most significant
             byte of the string corresponds to the first byte of the
             CS-SDU."
        REFERENCE
            "Subclause 11.13.18.3.5.2"
        ::= { wmanIf2fBsPhsRuleEntry 2 }

wmanIf2fBsPhsRulePhsMask OBJECT-TYPE
        SYNTAX      OCTET STRING (SIZE (0..65535))
        MAX-ACCESS  read-only
        STATUS      current
```

```
        DESCRIPTION
            "The PHSM An 8-bit mask that indicates which bytes in the
             PHS Field (PHSF) to suppress and which bytes to not
             suppress. The PHSM allows fields, such as sequence numbers
             or checksums (which vary in value), to be excluded from
             suppression with the constant bytes around them suppressed.
             It is encodded as follows:
             bit 0:
               0 = don't suppress the 1st byte of the suppression field
               1 = suppress first byte of the suppression field
             bit 1:
               0 = don't suppress the 2nd byte of the suppression field
               1 = suppress second byte of the suppression field
             bit x:
               0 = don't suppress the (x+1) byte of the suppression
                   field
               1 = suppress (x+1) byte of the suppression field
             where the length of the octet string is ceiling
             (wmanIf2CmnPhsRulePhsSize/8)."
        REFERENCE
            "Subclause 11.13.18.3.5.3"
        ::= { wmanIf2fBsPhsRuleEntry 3 }

wmanIf2fBsPhsRulePhsSize OBJECT-TYPE
        SYNTAX      Integer32 (0..255)
        UNITS       "byte"
        MAX-ACCESS  read-only
        STATUS      current
        DESCRIPTION
            "The value of this field - PHSS is the total number of bytes
             in the header to be suppressed and then restored in a
             service flow that uses PHS."
        REFERENCE
            "Subclause 11.13.18.3.5.4"
        DEFVAL    { 0 }
        ::= { wmanIf2fBsPhsRuleEntry 4 }

wmanIf2fBsPhsRulePhsVerify OBJECT-TYPE
        SYNTAX      WmanIf2TcPhsRuleVerify
        MAX-ACCESS  read-only
        STATUS      current
        DESCRIPTION
            "The value of this field indicates to the sending entity
             whether or not the packet header contents are to be
             verified prior to performing suppression."
        DEFVAL    { phsVerifyEnable }
        ::= { wmanIf2fBsPhsRuleEntry 5 }

--
-- Conformance Information
--
wmanIf2fBsConformance    OBJECT IDENTIFIER ::= {wmanIf2fBsMib 8}
wmanIf2fBsMibGroups      OBJECT IDENTIFIER ::= {wmanIf2fBsConformance 1}
wmanIf2fBsMibCompliances OBJECT IDENTIFIER ::= {wmanIf2fBsConformance 2}
```



```
-- compliance statements
wmanIf2fBsMibCompliance MODULE-COMPLIANCE
        STATUS      current
        DESCRIPTION
            "The compliance statement for devices that implement
             fixed Wireless MAN interfaces as defined in
             IEEE Std 802.16."

        MODULE          -- wmanIf2fBsMib

        -- conditionally mandatory group
        GROUP       wmanIf2fBsMibProvSfGroup
        DESCRIPTION
            "This group is mandatory for Base Station."

        -- conditionally mandatory group
        GROUP       wmanIf2fBsMibActSfGroup
        DESCRIPTION
            "This group is mandatory for Base Station."

        ::= { wmanIf2fBsMibCompliances 1 }

wmanIf2fBsMibProvSfGroup     OBJECT-GROUP
        OBJECTS {-- service flow
                 wmanIf2fBsSfDirection,
                 wmanIf2fBsServiceClassIndex,
                 wmanIf2fBsSfState,
                 wmanIf2fBsSfProvisionedTime,
                 wmanIf2fBsSfCsSpecification,
                 wmanIf2fBsProvisionedSfRowStatus,

                 -- QoS profiles
                 wmanIf2fBsQosServiceClassName,
                 wmanIf2fBsQoSTrafficPriority,
                 wmanIf2fBsQoSMaxSustainedRate,
                 wmanIf2fBsQoSMaxTrafficBurst,
                 wmanIf2fBsQoSMinReservedRate,
                 wmanIf2fBsQoSToleratedJitter,
                 wmanIf2fBsQoSMaxLatency,
                 wmanIf2fBsQoSFixedVsVariableSduInd,
                 wmanIf2fBsQoSSduSize,
                 wmanIf2fBsQosScSchedulingType,
                 wmanIf2fBsQosScArqEnable,
                 wmanIf2fBsQosScArqWindowSize,
                 wmanIf2fBsQosArqTxRetryTimeout,
                 wmanIf2fBsQosArqRxRetryTimeout,
                 wmanIf2fBsQosScArqBlockLifetime,
                 wmanIf2fBsQosScArqSyncLossTimeout,
                 wmanIf2fBsQosScArqDeliverInOrder,
                 wmanIf2fBsQosScArqRxPurgeTimeout,
                 wmanIf2fBsQosScArqBlockSizeReq,
                 wmanIf2fBsQosScArqBlockSizeRsp,
                 wmanIf2fBsQosReqTxPolicy,
```

```
                wmanIf2fBsQosFragmentSeqNumType,
                wmanIf2fBsQosMbsService,
                wmanIf2fBsQosServiceClassRowStatus,

                -- Classifier rules
                wmanIf2fBsProvClsfRulePriority,
                wmanIf2fBsProvClsfRuleIpProtocol,
                wmanIf2fBsProvClsfRuleIpSrcAddr,
                wmanIf2fBsProvClsfRuleIpSrcMask,
                wmanIf2fBsProvClsfRuleIpDestAddr,
                wmanIf2fBsProvClsfRuleIpDestMask,
                wmanIf2fBsProvClsfRuleSrcPortStart,
                wmanIf2fBsProvClsfRuleSrcPortEnd,
                wmanIf2fBsProvClsfRuleDestPortStart,
                wmanIf2fBsProvClsfRuleDestPortEnd,
                wmanIf2fBsProvClsfRuleDestMacAddr,
                wmanIf2fBsProvClsfRuleDestMacMask,
                wmanIf2fBsProvClsfRuleSrcMacAddr,
                wmanIf2fBsProvClsfRuleSrcMacMask,
                wmanIf2fBsProvClsfRuleEnetProtType,
                wmanIf2fBsProvClsfRuleEnetProtocol,
                wmanIf2fBsProvClsfRuleUserPriLow,
                wmanIf2fBsProvClsfRuleUserPriHigh,
                wmanIf2fBsProvClsfRuleVlanId,
                wmanIf2fBsProvClsfRuleIpv6FlowLabel,
                wmanIf2fBsProvClsfRuleActionRule,
                wmanIf2fBsProvClsfRuleIpTypeOfService,
                wmanIf2fBsProvClsfRuleBitMap,
                wmanIf2fBsProvClsfRuleAssociatedPhsi,
                wmanIf2fBsProvClsfRuleRowStatus,

                -- PHS rules
                wmanIf2fBsProvPhsRulePhsField,
                wmanIf2fBsProvPhsRulePhsMask,
                wmanIf2fBsProvPhsRulePhsSize,
                wmanIf2fBsProvPhsRulePhsVerify,
                wmanIf2fBsProvPhsRuleRowStatus}
        STATUS       current
        DESCRIPTION
            "This group contains objects for provisioned service flows."
        ::= { wmanIf2fBsMibGroups 1 }

wmanIf2fBsMibActSfGroup     OBJECT-GROUP
        OBJECTS {-- service flows
                wmanIf2fBsServiceFlowDirection,
                wmanIf2fBsServiceFlowState,
                wmanIf2fBsTrafficPriority,
                wmanIf2fBsMaxSustainedRate,
                wmanIf2fBsMaxTrafficBurst,
                wmanIf2fBsMinReservedRate,
                wmanIf2fBsToleratedJitter,
                wmanIf2fBsMaxLatency,
                wmanIf2fBsFixedVsVariableSduInd,
                wmanIf2fBsSduSize,
```



```
                wmanIf2fBsSfSchedulingType,
                wmanIf2fBsArqEnable,
                wmanIf2fBsArqWindowSize,
                wmanIf2fBsArqTxRetryTimeout,
                wmanIf2fBsArqRxRetryTimeout,
                wmanIf2fBsArqBlockLifetime,
                wmanIf2fBsArqSyncLossTimeout,
                wmanIf2fBsArqDeliverInOrder,
                wmanIf2fBsArqRxPurgeTimeout,
                wmanIf2fBsScArqBlockSizeReq,
                wmanIf2fBsScArqBlockSizeRsp,
                wmanIf2fBsReqTxPolicy,
                wmanIf2fBsCsSpecification,
                wmanIf2fBsTargetSaid,
                wmanIf2fBsFragmentSeqNumType,
                wmanIf2fBsMbsService,

                -- Classifier rules
                wmanIf2fBsClassifierRulePriority,
                wmanIf2fBsClassifierRuleIpProtocol,
                wmanIf2fBsClassifierRuleIpSourceAddr,
                wmanIf2fBsClassifierRuleIpSourceMask,
                wmanIf2fBsClassifierRuleIpDestAddr,
                wmanIf2fBsClassifierRuleIpDestMask,
                wmanIf2fBsClassifierRuleSourcePortStart,
                wmanIf2fBsClassifierRuleSourcePortEnd,
                wmanIf2fBsClassifierRuleDestPortStart,
                wmanIf2fBsClassifierRuleDestPortEnd,
                wmanIf2fBsClassifierRuleDestMacAddr,
                wmanIf2fBsClassifierRuleDestMacMask,
                wmanIf2fBsClassifierRuleSourceMacAddr,
                wmanIf2fBsClassifierRuleSourceMacMask,
                wmanIf2fBsClassifierRuleEnetProtocolTyp,
                wmanIf2fBsClassifierRuleEnetProtocol,
                wmanIf2fBsClassifierRuleUserPriLow,
                wmanIf2fBsClassifierRuleUserPriHigh,
                wmanIf2fBsClassifierRuleVlanId,
                wmanIf2fBsClassifierRulePkts,
                wmanIf2fBsClassifierRuleIpv6FlowLabel,
                wmanIf2fBsClassifierRuleActionRule,
                wmanIf2fBsClassifierRuleIpTypeOfService,
                wmanIf2fBsClassifierRuleBitMap,
                wmanIf2fBsClassifierRuleAssociatedPhsi,

                -- PHS rules
                wmanIf2fBsPhsRulePhsField,
                wmanIf2fBsPhsRulePhsMask,
                wmanIf2fBsPhsRulePhsSize,
                wmanIf2fBsPhsRulePhsVerify}
        STATUS       current
        DESCRIPTION
            "This group contains objects for active service flows."
        ::= { wmanIf2fBsMibGroups 2 }
END
```

13.2.6 wmanIf2SsMib

```
WMAN-IF2-SS-MIB DEFINITIONS ::= BEGIN

  IMPORTS
        MODULE-IDENTITY,
        OBJECT-TYPE,
        NOTIFICATION-TYPE,
        Unsigned32, Integer32, Counter32,
        Counter64, transmission
                FROM SNMPv2-SMI
        SnmpAdminString
                FROM SNMP-FRAMEWORK-MIB
        TEXTUAL-CONVENTION,
        MacAddress, RowStatus, TruthValue,
        TimeStamp, DateAndTime
                FROM SNMPv2-TC
        InetAddressType, InetAddress
                FROM INET-ADDRESS-MIB
        OBJECT-GROUP,
        MODULE-COMPLIANCE,
        NOTIFICATION-GROUP
                FROM SNMPv2-CONF
        ifIndex
                FROM IF-MIB;

wmanIf2SsMib MODULE-IDENTITY
        LAST-UPDATED    "200901280000Z" -- January 28, 2009
        ORGANIZATION    "IEEE 802.16"
        CONTACT-INFO
            "WG E-mail:  stds-802-16@ieee.org
             WG Chair:   Roger B. Marks
             Postal:     WiMAX Forum
             E-mail:     r.b.marks@ieee.org

             TG Chair:   Jonathan Labs
             Postal:     Wavesat Inc.
             E-mail:     JLabs@wavesat.com

             TG Contact: Phillip Barber
             Postal:     Huawei Technologies Co., Ltd
             E-mail:     pbarber@Huawei.com

             Editor:     Joey Chou
             Postal:     Intel Corporation
                         5000 W. Chandler Blvd,
                         Chandler, AZ 85227, USA
             E-mail:     joey.chou@intel.com"
        DESCRIPTION
            "This MIB Module defines managed objects for Subscriber
             Station based on IEEE Std 802.16.
             All objects with wmanIf2m prefix are designed for the
             mobile Broadband Wireless Networks. Others are designed for
             fixed Broadband Wireless Networks."
```



```
        REVISION        "200901280000Z"
        DESCRIPTION
            "Includes changeas per comment resolutions agreed at the
             San Diego meeting"
        REVISION        "200805270000Z"
        DESCRIPTION
            "Includes changes as per comment resolutions agreed at the
             Macau meeting"
        REVISION        "200803310000Z"
        DESCRIPTION
            "Includes changes as per comment resolutions agreed at the
             Orlando meeting"
        REVISION        "200802110000Z"
        DESCRIPTION
            "Includes changes as per comment resolutions agreed at the
             Levi meeting"
        REVISION        "200711300000Z"
        DESCRIPTION
            "The first revision of WMAN-IF2-SS-MIB module"
        ::= { iso std(0) iso8802(8802) wman(16) 5 }

--
-- Textual Conventions
--


--
-- wmanIf2SsConfigurationTable contains global parameters for SS
--
wmanIf2SsConfigurationTable OBJECT-TYPE
        SYNTAX      SEQUENCE OF WmanIf2SsConfigurationEntry
        MAX-ACCESS  not-accessible
        STATUS      current
        DESCRIPTION
            "This table contains one row for the SS system
             parameters."
        REFERENCE
            "Subclause 10.1"
        ::= { wmanIf2SsMib 1 }

wmanIf2SsConfigurationEntry OBJECT-TYPE
        SYNTAX      WmanIf2SsConfigurationEntry
        MAX-ACCESS  not-accessible
        STATUS      current
        DESCRIPTION
            ""
        INDEX     { ifIndex }
        ::= { wmanIf2SsConfigurationTable 1 }

WmanIf2SsConfigurationEntry ::= SEQUENCE {
        wmanIf2SsLostDLMapInterval              Integer32,
        wmanIf2SsLostULMapInterval              Integer32,
        wmanIf2SsContentionRangRetries          Integer32,
        wmanIf2SsRequestRetries                 Integer32,
```

```
        wmanIf2SsRegRequestRetries              Integer32,
        wmanIf2SsTftpBackoffStart               Integer32,
        wmanIf2SsTftpBackoffEnd                 Integer32,
        wmanIf2SsTftpRequestRetries             Integer32,
        wmanIf2SsTftpDownloadRetries            Integer32,
        wmanIf2SsTftpWait                       Integer32,
        wmanIf2SsToDRetries                     Integer32,
        wmanIf2SsToDRetryPeriod                 Integer32,
        wmanIf2SsT1Timeout                      Integer32,
        wmanIf2SsT2Timeout                      Integer32,
        wmanIf2SsT3Timeout                      Integer32,
        wmanIf2SsT4Timeout                      Integer32,
        wmanIf2SsT6Timeout                      Integer32,
        wmanIf2SsT12Timeout                     Integer32,
        wmanIf2SsT14Timeout                     Integer32,
        wmanIf2SsT18Timeout                     Integer32,
        wmanIf2SsT20Timeout                     Integer32,
        wmanIf2SsT21Timeout                     Integer32,
        wmanIf2SsSBCRequestRetries              Integer32,
        wmanIf2SsTftpCpltRetries                Integer32,
        wmanIf2SsT26Timeout                     Integer32,
        wmanIf2SsPowerControlIeProcTime         Integer32,
        wmanIf2SsT28Timeout                     Integer32,
        wmanIf2SsT29Timeout                     Integer32,
        wmanIf2SsT30Timeout                     Integer32,
        wmanIf2SsSaChallengeTimer               Integer32,
        wmanIf2SsSaChallengeMaxResends          Integer32,
        wmanIf2SsSaTekTimer                     Integer32,
        wmanIf2SsSaTekReqMaxResends             Integer32,
        wmanIf2SsUlMapProcTime                  Unsigned32,
        wmanIf2SsRangRespProcTime               Unsigned32,
        wmanIf2SsInvitedRangRetries             Integer32,
        wmanIf2SsDSxReqRetries                  Unsigned32,
        wmanIf2SsDSxRespRetries                 Unsigned32,
        wmanIf2SsT7Timeout                      Integer32,
        wmanIf2SsT8Timeout                      Integer32,
        wmanIf2SsT10Timeout                     Integer32,
        wmanIf2SsT22Timeout                     Integer32}

wmanIf2SsLostDLMapInterval OBJECT-TYPE
        SYNTAX      Integer32 (0..600)
        UNITS       "milliseconds"
        MAX-ACCESS  read-write
        STATUS      current
        DESCRIPTION
            "Time since last received DL-MAP message before downlink
             synchronization is considered lost in ms."
        ::= { wmanIf2SsConfigurationEntry 1 }

wmanIf2SsLostULMapInterval OBJECT-TYPE
        SYNTAX      Integer32 (0..600)
        UNITS       "milliseconds"
        MAX-ACCESS  read-write
        STATUS      current
```



```
        DESCRIPTION
            "Time since last received UL-MAP message before uplink
             synchronization is considered lost in ms."
        ::= { wmanIf2SsConfigurationEntry 2 }

wmanIf2SsContentionRangRetries OBJECT-TYPE
        SYNTAX      Integer32 (16..65535)
        MAX-ACCESS  read-write
        STATUS      current
        DESCRIPTION
            "Number of retries on contention Ranging Requests."
        ::= { wmanIf2SsConfigurationEntry 3 }

wmanIf2SsRequestRetries OBJECT-TYPE
        SYNTAX      Integer32 (16..65535)
        MAX-ACCESS  read-write
        STATUS      current
        DESCRIPTION
            "Number of retries on bandwidth allocation requests."
        ::= { wmanIf2SsConfigurationEntry 4 }

wmanIf2SsRegRequestRetries OBJECT-TYPE
        SYNTAX      Integer32 (3..65535)
        MAX-ACCESS  read-write
        STATUS      current
        DESCRIPTION
            "Number of retries on registration requests."
        ::= { wmanIf2SsConfigurationEntry 5 }

wmanIf2SsTftpBackoffStart OBJECT-TYPE
        SYNTAX      Integer32 (1..65535)
        UNITS       "seconds"
        MAX-ACCESS  read-write
        STATUS      current
        DESCRIPTION
            "Initial value for TFTP backoff in second."
        ::= { wmanIf2SsConfigurationEntry 6 }

wmanIf2SsTftpBackoffEnd OBJECT-TYPE
        SYNTAX      Integer32 (16..65535)
        UNITS       "seconds"
        MAX-ACCESS  read-write
        STATUS      current
        DESCRIPTION
            "Last value for TFTP backoff in second."
        ::= { wmanIf2SsConfigurationEntry 7 }

wmanIf2SsTftpRequestRetries OBJECT-TYPE
        SYNTAX      Integer32 (16..65535)
        MAX-ACCESS  read-write
        STATUS      current
        DESCRIPTION
            "Number of retries on TFTP request."
        ::= { wmanIf2SsConfigurationEntry 8 }
```

```
wmanIf2SsTftpDownloadRetries OBJECT-TYPE
        SYNTAX      Integer32 (3..65535)
        MAX-ACCESS  read-write
        STATUS      current
        DESCRIPTION
            "Number of retries on entire TFTP downloads."
        ::= { wmanIf2SsConfigurationEntry 9 }

wmanIf2SsTftpWait OBJECT-TYPE
        SYNTAX      Integer32 (2..65535)
        UNITS       "minutes"
        MAX-ACCESS  read-write
        STATUS      current
        DESCRIPTION
            "The duration between two consecutive Transfer
             operational parameters (TFTP) retries in min."
        ::= { wmanIf2SsConfigurationEntry 10 }

wmanIf2SsToDRetries OBJECT-TYPE
        SYNTAX      Integer32 (3..65535)
        MAX-ACCESS  read-write
        STATUS      current
        DESCRIPTION
            "Number of Retries to establisg the Time of Day."
        ::= { wmanIf2SsConfigurationEntry 11 }

wmanIf2SsToDRetryPeriod OBJECT-TYPE
        SYNTAX      Integer32 (5..65535)
        UNITS       "minutes"
        MAX-ACCESS  read-write
        STATUS      current
        DESCRIPTION
            "The retry period to re-establisg the Time of Day, as
             describe in the network entry procedure."
        ::= { wmanIf2SsConfigurationEntry 12 }

wmanIf2SsT1Timeout OBJECT-TYPE
        SYNTAX      Integer32 (0..50000)
        UNITS       "milliseconds"
        MAX-ACCESS  read-write
        STATUS      current
        DESCRIPTION
            "Wait for DCD timeout in ms."
        ::= { wmanIf2SsConfigurationEntry 13 }

wmanIf2SsT2Timeout OBJECT-TYPE
        SYNTAX      Integer32 (0..10000)
        UNITS       "milliseconds"
        MAX-ACCESS  read-write
        STATUS      current
        DESCRIPTION
            "Wait for broadcast ranging timeout in ms."
        ::= { wmanIf2SsConfigurationEntry 14 }
```



```
wmanIf2SsT3Timeout OBJECT-TYPE
        SYNTAX      Integer32 (0..200)
        UNITS       "milliseconds"
        MAX-ACCESS  read-write
        STATUS      current
        DESCRIPTION
            "Ranging Response reception timeout following the
             transmission of a Ranging Request in ms."
        DEFVAL    {50}
        ::= { wmanIf2SsConfigurationEntry 15 }

wmanIf2SsT4Timeout OBJECT-TYPE
        SYNTAX      Integer32 (1 .. 35)
        UNITS       "seconds"
        MAX-ACCESS  read-write
        STATUS      current
        DESCRIPTION
            "Wait for ranging opportunity or data grant. If the
             pending until complete field was used earlier by this SS,
             then the value of that field shall be added to this
             interval in second."
        ::= { wmanIf2SsConfigurationEntry 16 }

wmanIf2SsT6Timeout OBJECT-TYPE
        SYNTAX      Integer32 (0..3000)
        UNITS       "milliseconds"
        MAX-ACCESS  read-write
        STATUS      current
        DESCRIPTION
            "Wait for registration response in ms."
        ::= { wmanIf2SsConfigurationEntry 17 }

wmanIf2SsT12Timeout OBJECT-TYPE
        SYNTAX      Integer32 (0..50000)
        UNITS       "milliseconds"
        MAX-ACCESS  read-write
        STATUS      current
        DESCRIPTION
            "Wait for UCD descriptor in ms."
        ::= { wmanIf2SsConfigurationEntry 18 }

wmanIf2SsT14Timeout OBJECT-TYPE
        SYNTAX      Integer32 (0..200)
        UNITS       "milliseconds"
        MAX-ACCESS  read-write
        STATUS      current
        DESCRIPTION
            "Wait for DSX-RVD Timeout in ms."
        ::= { wmanIf2SsConfigurationEntry 19 }

wmanIf2SsT18Timeout OBJECT-TYPE
        SYNTAX      Integer32 (0..65535)
        UNITS       "milliseconds"
```

```
        MAX-ACCESS  read-write
        STATUS      current
        DESCRIPTION
            "wait for SBC-RSP timeout in ms."
        ::= { wmanIf2SsConfigurationEntry 21 }

wmanIf2SsT20Timeout OBJECT-TYPE
        SYNTAX      Integer32 (0..65535)
        UNITS       "milliseconds"
        MAX-ACCESS  read-write
        STATUS      current
        DESCRIPTION
            "Time SS searches for preambles on a given channel in ms."
        ::= { wmanIf2SsConfigurationEntry 22 }

wmanIf2SsT21Timeout OBJECT-TYPE
        SYNTAX      Integer32 (0 .. 11000)
        UNITS       "milliseconds"
        MAX-ACCESS  read-write
        STATUS      current
        DESCRIPTION
            "Time SS searches for DL-MAP on a given channel in ms."
        ::= { wmanIf2SsConfigurationEntry 23 }

wmanIf2SsSBCRequestRetries OBJECT-TYPE
        SYNTAX      Integer32 (3..16)
        MAX-ACCESS  read-write
        STATUS      current
        DESCRIPTION
            "Number of retries on SBC Request."
        ::= { wmanIf2SsConfigurationEntry 24 }

wmanIf2SsTftpCpltRetries OBJECT-TYPE
        SYNTAX      Integer32 (3..16)
        MAX-ACCESS  read-write
        STATUS      current
        DESCRIPTION
            "Number of retries on TFTP-CPLT."
        ::= { wmanIf2SsConfigurationEntry 25 }

wmanIf2SsT26Timeout OBJECT-TYPE
        SYNTAX      Integer32 (10..200)
        UNITS       "milliseconds"
        MAX-ACCESS  read-write
        STATUS      current
        DESCRIPTION
            "Wait for TFTP-RSP in ms."
        ::= { wmanIf2SsConfigurationEntry 26 }

wmanIf2SsPowerControlIeProcTime OBJECT-TYPE
        SYNTAX      Integer32 (0 .. 2500)
        UNITS       "micro seconds"
        MAX-ACCESS  read-write
        STATUS      current
```



```
        DESCRIPTION
            "Time allowed for an SS following receipt of a UL-MAP
             including a power control IE before it is expected to
             apply the corrections instructed by the BS."
        ::= { wmanIf2SsConfigurationEntry 27 }

wmanIf2SsT28Timeout OBJECT-TYPE
        SYNTAX      Integer32 (200 .. 60000)
        UNITS       "milliseconds"
        MAX-ACCESS  read-write
        STATUS      current
        DESCRIPTION
            "DBPC-REQ re-try timer for requesting less robust burst
             profile after rejection by the BS"
        DEFVAL      { 1000 }
        ::= { wmanIf2SsConfigurationEntry 28 }

wmanIf2SsT29Timeout OBJECT-TYPE
        SYNTAX      Integer32 (200 .. 30000)
        UNITS       "milliseconds"
        MAX-ACCESS  read-write
        STATUS      current
        DESCRIPTION
            "RNG-REQ/DBPC-REQ re-try timer for requesting more robust
             burst profile after rejecting by the BS"
        DEFVAL      { 1000 }
        ::= { wmanIf2SsConfigurationEntry 29 }

wmanIf2SsT30Timeout OBJECT-TYPE
        SYNTAX      Integer32 (200 .. 200)
        UNITS       "milliseconds"
        MAX-ACCESS  read-write
        STATUS      current
        DESCRIPTION
            "DBPC-RSP reception timeout following the transmission of
             a DBPC-REQ."
        DEFVAL      { 200 }
        ::= { wmanIf2SsConfigurationEntry 30 }

wmanIf2SsSaChallengeTimer OBJECT-TYPE
        SYNTAX      Integer32 (500 .. 2000)
        UNITS       "milliseconds"
        MAX-ACCESS  read-write
        STATUS      current
        DESCRIPTION
            "Time prior to re-send of SATEK-Challenge."
        DEFVAL      { 1000 }
        ::= { wmanIf2SsConfigurationEntry 31 }

wmanIf2SsSaChallengeMaxResends OBJECT-TYPE
        SYNTAX      Integer32 (1 .. 3)
        MAX-ACCESS  read-write
        STATUS      current
        DESCRIPTION
```

```
            "Maximum number of transmissions of SA-TEK-Challenge."
        DEFVAL      { 3 }
        ::= { wmanIf2SsConfigurationEntry 32 }

wmanIf2SsSaTekTimer OBJECT-TYPE
        SYNTAX      Integer32 (100 .. 1000)
        UNITS       "milliseconds"
        MAX-ACCESS  read-write
        STATUS      current
        DESCRIPTION
            "Time prior to re-send of SATEK-Request."
        DEFVAL      { 300 }
        ::= { wmanIf2SsConfigurationEntry 33 }

wmanIf2SsSaTekReqMaxResends OBJECT-TYPE
        SYNTAX      Integer32 (1 .. 3)
        MAX-ACCESS  read-write
        STATUS      current
        DESCRIPTION
            "Maximum number of transmissions of SA-TEK-Request."
        DEFVAL      { 3 }
        ::= { wmanIf2SsConfigurationEntry 34 }

wmanIf2SsUlMapProcTime OBJECT-TYPE
        SYNTAX      Unsigned32 (200 .. 4294967295)
        UNITS       "micro seconds"
        MAX-ACCESS  read-write
        STATUS      current
        DESCRIPTION
            "Time provided between arrival of the last bit of a UL-MAP
             at an SS and effectiveness of that map in us. For OFDMA
             mode, the time shall be counted starting from the end of
             the burst carrying the UL-MAP.
             Minimum value: SC = 200us
                            OFDM = 1ms
                            OFDMA = frame duration"
        ::= { wmanIf2SsConfigurationEntry 35 }

wmanIf2SsRangRespProcTime OBJECT-TYPE
        SYNTAX      Unsigned32 (1 .. 2500)
        UNITS       "micro seconds"
        MAX-ACCESS  read-write
        STATUS      current
        DESCRIPTION
            "Time allowed for an SS following receipt of a RNG-RSP
             before it is expected to apply the corrections instructed
             by the BS Minimum value."
        ::= { wmanIf2SsConfigurationEntry 36 }

wmanIf2SsInvitedRangRetries OBJECT-TYPE
        SYNTAX      Integer32 (16..65535)
        MAX-ACCESS  read-write
        STATUS      current
        DESCRIPTION
```



```
            "Number of retries on inviting Ranging Requests."
        ::= { wmanIf2SsConfigurationEntry 37 }

wmanIf2SsDSxReqRetries OBJECT-TYPE
        SYNTAX      Unsigned32
        MAX-ACCESS  read-write
        STATUS      current
        DESCRIPTION
            "Number of Timeout Retries on DSA/DSC/DSD Requests."
        DEFVAL      { 3 }
        ::= { wmanIf2SsConfigurationEntry 38 }

wmanIf2SsDSxRespRetries OBJECT-TYPE
        SYNTAX      Unsigned32
        MAX-ACCESS  read-write
        STATUS      current
        DESCRIPTION
            "Number of Timeout Retries on DSA/DSC/DSD Responses."
        DEFVAL      { 3 }
        ::= { wmanIf2SsConfigurationEntry 39 }

wmanIf2SsT7Timeout OBJECT-TYPE
        SYNTAX      Integer32 (0 .. 1000)
        UNITS       "milliseconds"
        MAX-ACCESS  read-write
        STATUS      current
        DESCRIPTION
            "Wait for DSA/DSC/DSD Response Timeout in ms."
        ::= { wmanIf2SsConfigurationEntry 41 }

wmanIf2SsT8Timeout OBJECT-TYPE
        SYNTAX      Integer32 (0 .. 300)
        UNITS       "milliseconds"
        MAX-ACCESS  read-write
        STATUS      current
        DESCRIPTION
            "Wait for DSA/DSC/DSD Acknowledge Timeout in ms."
        ::= { wmanIf2SsConfigurationEntry 42 }

wmanIf2SsT10Timeout OBJECT-TYPE
        SYNTAX      Integer32 (0 .. 3000)
        UNITS       "milliseconds"
        MAX-ACCESS  read-write
        STATUS      current
        DESCRIPTION
            "Wait for Transaction End timeout in ms."
        ::= { wmanIf2SsConfigurationEntry 43 }

wmanIf2SsT22Timeout OBJECT-TYPE
        SYNTAX      Integer32 (0 .. 500)
        UNITS       "milliseconds"
        MAX-ACCESS  read-write
        STATUS      current
        DESCRIPTION
```

```
            "Wait for ARQ Reset in ms."
        ::= { wmanIf2SsConfigurationEntry 44 }

--
-- wmanIf2mSsConfigurationTable contains global parameters for SS
--
wmanIf2mSsConfigurationTable OBJECT-TYPE
        SYNTAX      SEQUENCE OF WmanIf2mSsConfigurationEntry
        MAX-ACCESS  not-accessible
        STATUS      current
        DESCRIPTION
            "This table contains one row for the SS system parameters."
        REFERENCE
            "Subclause 10.1"
        ::= { wmanIf2SsMib 2 }

wmanIf2mSsConfigurationEntry OBJECT-TYPE
        SYNTAX      WmanIf2mSsConfigurationEntry
        MAX-ACCESS  not-accessible
        STATUS      current
        DESCRIPTION
            ""
        INDEX     { ifIndex }
        ::= { wmanIf2mSsConfigurationTable 1 }

WmanIf2mSsConfigurationEntry ::= SEQUENCE {
        wmanIf2mSsMinSleepInterval              Integer32,
        wmanIf2mSsMaxSleepInterval              Integer32,
        wmanIf2mSsListeningInterval             Integer32,
        wmanIf2mSsNrbBsIndexValidityTime        Integer32,
        wmanIf2mSsAscAgingTimer                 Integer32,
        wmanIf2mSsServingBsidAgingTimer         Integer32,
        wmanIf2mSsT42Timer                      Integer32,
        wmanIf2mSsFastTrackingRspProcTime       Integer32,
        wmanIf2mSsModeSelectFeedbackProcTime    Integer32,
        wmanIf2mSsIdleModeTimer                 Unsigned32,
        wmanIf2mSsT43Timer                      Integer32,
        wmanIf2mSsT44Timer                      Integer32,
        wmanIf2mSsT45Timer                      Integer32,
        wmanIf2mSsDregReqRetryCount             Integer32,
        wmanIf2mSsHoProcOptimizeMsTimerRetry    Integer32,
        wmanIf2mSsPagingInterval                Integer32,
        wmanIf2mSsMaxDirScanTime                Integer32}

wmanIf2mSsMinSleepInterval OBJECT-TYPE
        SYNTAX      Integer32 (2 .. 1024)
        UNITS       "frames"
        MAX-ACCESS  read-write
        STATUS      current
        DESCRIPTION
            "Minimum sleeping time allowed to MS."
        ::= { wmanIf2mSsConfigurationEntry 1 }

wmanIf2mSsMaxSleepInterval OBJECT-TYPE
```



```
        SYNTAX      Integer32 (2 .. 1024)
        UNITS       "frames"
        MAX-ACCESS  read-write
        STATUS      current
        DESCRIPTION
            "Maximum sleeping time allowed to MS."
        ::= { wmanIf2mSsConfigurationEntry 2 }

wmanIf2mSsListeningInterval OBJECT-TYPE
        SYNTAX      Integer32 (1 .. 64)
        UNITS       "frames"
        MAX-ACCESS  read-write
        STATUS      current
        DESCRIPTION
            "The time duration during which the MS, after waking up and
             synchronizing with the DL transmissions, can demodulate
             downlink transmissions and decide whether to stay awake or
             go back to sleep."
        ::= { wmanIf2mSsConfigurationEntry 3 }

wmanIf2mSsNrbBsIndexValidityTime OBJECT-TYPE
        SYNTAX      Integer32 (1 .. 5)
        UNITS       "seconds"
        MAX-ACCESS  read-write
        STATUS      current
        DESCRIPTION
            "Time duration during which the MS can use the neighbor BS
             list in MOB_NBR-ADV message for the compression of neighbor
             BSIDs."
        ::= { wmanIf2mSsConfigurationEntry 4 }

wmanIf2mSsAscAgingTimer OBJECT-TYPE
        SYNTAX      Integer32 (100 .. 10000)
        UNITS       "milliseconds"
        MAX-ACCESS  read-write
        STATUS      current
        DESCRIPTION
            "Nominal time for aging of MS associations"
        ::= { wmanIf2mSsConfigurationEntry 5 }

wmanIf2mSsServingBsidAgingTimer OBJECT-TYPE
        SYNTAX      Integer32 (0 .. 5000)
        UNITS       "milliseconds"
        MAX-ACCESS  read-write
        STATUS      current
        DESCRIPTION
            "Nominal time for aging of serving BS association. Timer
             recycles on successful serving BS DL-MAP read."
        ::= { wmanIf2mSsConfigurationEntry 6 }

wmanIf2mSsT42Timer OBJECT-TYPE
        SYNTAX      Integer32 (3..65535)
        MAX-ACCESS  read-write
        STATUS      current
```

```
        DESCRIPTION
            "MOB_HO-IND timeout when sent with HO_IND_type = 0b10."
        ::= { wmanIf2mSsConfigurationEntry 7 }

wmanIf2mSsFastTrackingRspProcTime OBJECT-TYPE
        SYNTAX      Integer32 (1..65535)
        UNITS       "milliseconds"
        MAX-ACCESS  read-write
        STATUS      current
        DESCRIPTION
            "Time allowed for an MS following receipt of a UL-MAP Fast
             tracking indication response before it is expected to apply
             the corrections instructed by the BS.
             Default value = One DL subframe duration"
        ::= { wmanIf2mSsConfigurationEntry 8 }

wmanIf2mSsModeSelectFeedbackProcTime OBJECT-TYPE
        SYNTAX      Integer32 (1 .. 65535)
        UNITS       "microseconds"
        MAX-ACCESS  read-write
        STATUS      current
        DESCRIPTION
            "The time allowed between the end of the burst carrying the
             Mode Selection Feedback subheader and the start of the UL
             subframe carrying the Mode Selection Feedback response.
             Minimum value = 1 frame duration for TDD
                             1/2 Frame duration for FDD"
        ::= { wmanIf2mSsConfigurationEntry 9 }

wmanIf2mSsIdleModeTimer OBJECT-TYPE
        SYNTAX      Unsigned32 (128 .. 65536)
        UNITS       "seconds"
        MAX-ACCESS  read-write
        STATUS      current
        DESCRIPTION
            "MS timed interval to conduct Location Update. Set timer to
             MS Idle Mode Timeout capabilities setting. Timer recycles
             on successful Idle Mode Location Update."
        DEFVAL      { 4096 }
        ::= { wmanIf2mSsConfigurationEntry 10 }

wmanIf2mSsT43Timer OBJECT-TYPE
        SYNTAX      Integer32 (1 .. 65535)
        UNITS       "milliseconds"
        MAX-ACCESS  read-write
        STATUS      current
        DESCRIPTION
            "Time the MS waits for MOB_SLP-RSP."
        ::= { wmanIf2mSsConfigurationEntry 11 }

wmanIf2mSsT44Timer OBJECT-TYPE
        SYNTAX      Integer32 (1 .. 65535)
        UNITS       "milliseconds"
        MAX-ACCESS  read-write
```



```
        STATUS      current
        DESCRIPTION
            "Time the MS waits for MOB_SCN-RSP."
        ::= { wmanIf2mSsConfigurationEntry 12 }

wmanIf2mSsT45Timer OBJECT-TYPE
        SYNTAX      Integer32 (1 .. 500)
        UNITS       "milliseconds"
        MAX-ACCESS  read-write
        STATUS      current
        DESCRIPTION
            "Time the MS waits for DREGCMD."
        DEFVAL      { 250 }
        ::= { wmanIf2mSsConfigurationEntry 13 }

wmanIf2mSsDregReqRetryCount OBJECT-TYPE
        SYNTAX      Integer32 (3 .. 16)
        MAX-ACCESS  read-write
        STATUS      current
        DESCRIPTION
            "Number of retries on DREG Request Message."
        DEFVAL      { 3 }
        ::= { wmanIf2mSsConfigurationEntry 14 }

wmanIf2mSsHoProcOptimizeMsTimerRetry OBJECT-TYPE
        SYNTAX      Integer32 (3 .. 100)
        MAX-ACCESS  read-write
        STATUS      current
        DESCRIPTION
            "Number of SBC-REQ and/or REG-REQ retries while waiting
             for unsolicited SBC-RSP and/or REG-RSP as part of MS
             network re-entry and as indicated by HO Process
             Optimization message element of RNGRSP."
        ::= { wmanIf2mSsConfigurationEntry 15 }

wmanIf2mSsPagingInterval OBJECT-TYPE
        SYNTAX      Integer32 (8 .. 1024)
        UNITS       "frames"
        MAX-ACCESS  read-write
        STATUS      current
        DESCRIPTION
            "Time duration of Paging Interval of the BS."
        DEFVAL      { 64 }
        ::= { wmanIf2mSsConfigurationEntry 16 }

wmanIf2mSsMaxDirScanTime OBJECT-TYPE
        SYNTAX      Integer32 (1 .. 65535)
        UNITS       "seconds"
        MAX-ACCESS  read-write
        STATUS      current
        DESCRIPTION
            "Maximum scanning time of neighbor BSs by MS before
             reporting any results."
        ::= { wmanIf2mSsConfigurationEntry 17 }
```

```
--
-- Subscriber station wmanIf2SsMib contains the SS SNMP Trap objects
--
wmanIf2SsTrapControl OBJECT IDENTIFIER ::= { wmanIf2SsMib 3 }
wmanIf2SsTrapDefinitions OBJECT IDENTIFIER ::= { wmanIf2SsMib 4 }

-- This object groups all NOTIFICATION-TYPE objects for SS.
-- It is defined following RFC2758 sections 8.5 and 8.6
-- for the compatibility with SNMPv1.
wmanIf2SsTrapPrefix OBJECT IDENTIFIER ::= {wmanIf2SsTrapDefinitions 0}

wmanIf2SsTrapControlRegister    OBJECT-TYPE
        SYNTAX      BITS {wmanIf2SsDhcpSuccess(0),
                          wmanIf2SsRssiStatusChange(1),
                          wmanIf2SsPkmSilentState(2)}
        MAX-ACCESS  read-write
        STATUS      current
        DESCRIPTION
            "The object is used to enable Subscriber Station traps.
             From left to right, the set bit indicates the corresponding
             Subscriber Station trap is enabled."
        ::= { wmanIf2SsTrapControl  1 }

wmanIf2SsThresholdConfigTable OBJECT-TYPE
        SYNTAX      SEQUENCE OF WmanIf2SsThresholdConfigEntry
        MAX-ACCESS  not-accessible
        STATUS      current
        DESCRIPTION
            "This table contains threshold objects that can be set to
             detect the threshold crossing events."
        ::= { wmanIf2SsTrapControl 2 }

wmanIf2SsThresholdConfigEntry OBJECT-TYPE
        SYNTAX      WmanIf2SsThresholdConfigEntry
        MAX-ACCESS  not-accessible
        STATUS      current
        DESCRIPTION
            "This table provides one row for each SS."
        INDEX     { ifIndex }
        ::= { wmanIf2SsThresholdConfigTable 1 }

WmanIf2SsThresholdConfigEntry ::= SEQUENCE {
        wmanIf2SsRssiLowThreshold               Integer32,
        wmanIf2SsRssiHighThreshold              Integer32}

wmanIf2SsRssiLowThreshold OBJECT-TYPE
        SYNTAX      Integer32
        UNITS       "dBm"
        MAX-ACCESS  read-write
        STATUS      current
        DESCRIPTION
            "Low RSSI threshold for generating the RSSI alarm trap."
        ::= { wmanIf2SsThresholdConfigEntry 1 }
```



```
wmanIf2SsRssiHighThreshold OBJECT-TYPE
        SYNTAX      Integer32
        UNITS       "dBm"
        MAX-ACCESS  read-write
        STATUS      current
        DESCRIPTION
            "High RSSI threshold for generating a trap to indicate
             the RSSI is restored."
        ::= { wmanIf2SsThresholdConfigEntry 2 }

wmanIf2SsDhcpSuccessTrap    NOTIFICATION-TYPE
        OBJECTS     {ifIndex,
                     wmanIf2SsMacAddress}
        STATUS      current
        DESCRIPTION
            "An event to report a successful Handshake to establish IP
             connectivity."
        ::= { wmanIf2SsTrapPrefix 1 }

wmanIf2SsRssiStatusChangeTrap NOTIFICATION-TYPE
        OBJECTS     {ifIndex,
                     wmanIf2SsMacAddress,
                     wmanIf2SsRssiStatus,
                     wmanIf2SsRssiStatusInfo}
        STATUS      current
        DESCRIPTION
            "An event to report that the downlink RSSI is below
             wmanIf2SsRssiLowThreshold, or above
             wmanIf2SsRssiHighThreshold after restore."
        ::= { wmanIf2SsTrapPrefix 2 }

wmanIf2SsPkmSilentStateTrap NOTIFICATION-TYPE
        OBJECTS     {ifIndex,
                     wmanIf2SsMacAddress,
                     wmanIf2SsSilentStateInfo}
        STATUS      current
        DESCRIPTION
            "An event to report that SS PKM has entered into the
             siltent state."
        ::= { wmanIf2SsTrapPrefix 3 }

wmanIf2SsNotificationObjectsTable OBJECT-TYPE
        SYNTAX      SEQUENCE OF WmanIf2SsNotificationObjectsEntry
        MAX-ACCESS  not-accessible
        STATUS      current
        DESCRIPTION
            "This table contains SS notification objects that have been
             reported by the trap."
        ::= { wmanIf2SsTrapDefinitions 1 }

wmanIf2SsNotificationObjectsEntry OBJECT-TYPE
        SYNTAX      WmanIf2SsNotificationObjectsEntry
        MAX-ACCESS  not-accessible
```

```
        STATUS      current
        DESCRIPTION
            "This table provides one row for each SS that has
             generated traps."
        INDEX     { ifIndex }
        ::= { wmanIf2SsNotificationObjectsTable 1 }

WmanIf2SsNotificationObjectsEntry ::= SEQUENCE {
        wmanIf2SsMacAddress                     MacAddress,
        wmanIf2SsRssiStatus                     Integer32,
        wmanIf2SsRssiStatusInfo                 OCTET STRING,
        wmanIf2SsSilentStateInfo                OCTET STRING}

wmanIf2SsMacAddress  OBJECT-TYPE
        SYNTAX      MacAddress
        MAX-ACCESS  read-only
        STATUS      current
        DESCRIPTION
            "The MAC address of the SS generating the trap."
        ::= { wmanIf2SsNotificationObjectsEntry 1 }

wmanIf2SsRssiStatus  OBJECT-TYPE
        SYNTAX      INTEGER {ssRssiAlarm(1),
                             ssRssiNoAlarm(2)}
        MAX-ACCESS  read-only
        STATUS      current
        DESCRIPTION
            "A RSSI alarm is generated if the RSSI is lower than
             wmanIf2SsRssiLowThreshold, or above
             wmanIf2SsRssiHighThreshold after alarm is restored."
        ::= { wmanIf2SsNotificationObjectsEntry 2 }

wmanIf2SsRssiStatusInfo  OBJECT-TYPE
        SYNTAX      OCTET STRING (SIZE(0..255))
        MAX-ACCESS  read-only
        STATUS      current
        DESCRIPTION
            "This object provides additional information about RSSI
             alarm. It is implementation specific."
        ::= { wmanIf2SsNotificationObjectsEntry 3 }

wmanIf2SsSilentStateInfo  OBJECT-TYPE
        SYNTAX      OCTET STRING (SIZE(0..255))
        MAX-ACCESS  read-only
        STATUS      current
        DESCRIPTION
            "This object provides additional information about PKM
             silent State. It is implementation specific."
        ::= { wmanIf2SsNotificationObjectsEntry 4 }

--
-- Conformance Information
--
wmanIf2SsConformance    OBJECT IDENTIFIER ::= {wmanIf2SsMib 8}
```



```
wmanIf2SsMibGroups      OBJECT IDENTIFIER ::= {wmanIf2SsConformance 1}
wmanIf2SsMibCompliances OBJECT IDENTIFIER ::= {wmanIf2SsConformance 2}

-- compliance statements
wmanIf2SsMibCompliance MODULE-COMPLIANCE
        STATUS      current
        DESCRIPTION
            "The compliance statement for devices that implement
             Wireless MAN interfaces as defined in IEEE Std 802.16."

        MODULE          -- wmanIf2fBsMib

        -- conditionally mandatory group
        GROUP       wmanIf2SsMibConfigGroup
        DESCRIPTION
            "This group is mandatory for Subscriber Station."

        -- conditionally mandatory group
        GROUP       wmanIf2mSsMibConfigGroup
        DESCRIPTION
            "This group is mandatory for Mobile Station."

        -- conditionally mandatory group
        GROUP       wmanIf2SsMibNotificationGroup
        DESCRIPTION
            "This group is mandatory for Subscriber Station."

        ::= { wmanIf2SsMibCompliances 1 }

wmanIf2SsMibConfigGroup     OBJECT-GROUP
        OBJECTS {-- SS configuration
                 wmanIf2SsLostDLMapInterval,
                 wmanIf2SsLostULMapInterval,
                 wmanIf2SsContentionRangRetries,
                 wmanIf2SsRequestRetries,
                 wmanIf2SsRegRequestRetries,
                 wmanIf2SsTftpBackoffStart,
                 wmanIf2SsTftpBackoffEnd,
                 wmanIf2SsTftpRequestRetries,
                 wmanIf2SsTftpDownloadRetries,
                 wmanIf2SsTftpWait,
                 wmanIf2SsToDRetries,
                 wmanIf2SsToDRetryPeriod,
                 wmanIf2SsT1Timeout,
                 wmanIf2SsT2Timeout,
                 wmanIf2SsT3Timeout,
                 wmanIf2SsT4Timeout,
                 wmanIf2SsT6Timeout,
                 wmanIf2SsT12Timeout,
                 wmanIf2SsT14Timeout,
                 wmanIf2SsT18Timeout,
                 wmanIf2SsT20Timeout,
                 wmanIf2SsT21Timeout,
                 wmanIf2SsSBCRequestRetries,
```

```
                wmanIf2SsTftpCpltRetries,
                wmanIf2SsT26Timeout,
                wmanIf2SsPowerControlIeProcTime,
                wmanIf2SsT28Timeout,
                wmanIf2SsT29Timeout,
                wmanIf2SsT30Timeout,
                wmanIf2SsSaChallengeTimer,
                wmanIf2SsSaChallengeMaxResends,
                wmanIf2SsSaTekTimer,
                wmanIf2SsSaTekReqMaxResends,
                wmanIf2SsUlMapProcTime,
                wmanIf2SsRangRespProcTime,
                wmanIf2SsInvitedRangRetries,
                wmanIf2SsDSxReqRetries,
                wmanIf2SsDSxRespRetries,
                wmanIf2SsT7Timeout,
                wmanIf2SsT8Timeout,
                wmanIf2SsT10Timeout,
                wmanIf2SsT22Timeout,
                wmanIf2SsTrapControlRegister,
                wmanIf2SsRssiLowThreshold,
                wmanIf2SsRssiHighThreshold,
                wmanIf2SsMacAddress,
                wmanIf2SsRssiStatus,
                wmanIf2SsRssiStatusInfo,
                wmanIf2SsSilentStateInfo}
        STATUS       current
        DESCRIPTION
            "This group contains objects for SS configuration."
        ::= { wmanIf2SsMibGroups 1 }

wmanIf2mSsMibConfigGroup     OBJECT-GROUP
        OBJECTS {-- MS configuration
                wmanIf2mSsMinSleepInterval,
                wmanIf2mSsMaxSleepInterval,
                wmanIf2mSsListeningInterval,
                wmanIf2mSsNrbBsIndexValidityTime,
                wmanIf2mSsAscAgingTimer,
                wmanIf2mSsServingBsidAgingTimer,
                wmanIf2mSsT42Timer,
                wmanIf2mSsFastTrackingRspProcTime,
                wmanIf2mSsModeSelectFeedbackProcTime,
                wmanIf2mSsIdleModeTimer,
                wmanIf2mSsT43Timer,
                wmanIf2mSsT44Timer,
                wmanIf2mSsT45Timer,
                wmanIf2mSsDregReqRetryCount,
                wmanIf2mSsHoProcOptimizeMsTimerRetry,
                wmanIf2mSsPagingInterval,
                wmanIf2mSsMaxDirScanTime}
        STATUS       current
        DESCRIPTION
            "This group contains objects for MS configuration."
        ::= { wmanIf2SsMibGroups 2 }
```



```
wmanIf2SsMibNotificationGroup     NOTIFICATION-GROUP
        NOTIFICATIONS {wmanIf2SsDhcpSuccessTrap,
                       wmanIf2SsRssiStatusChangeTrap,
                       wmanIf2SsPkmSilentStateTrap}
        STATUS       current
        DESCRIPTION
            "This group contains SS event notifications."
        ::= { wmanIf2SsMibGroups 3 }
END
```

13.2.7 wmanIf2TcMib

```
WMAN-IF2-TC-MIB DEFINITIONS ::= BEGIN

  IMPORTS
        MODULE-IDENTITY
                FROM SNMPv2-SMI
        TEXTUAL-CONVENTION
                FROM SNMPv2-TC;

wmanIf2TcMib MODULE-IDENTITY
        LAST-UPDATED    "200901280000Z" -- January 28, 2009
        ORGANIZATION    "IEEE 802.16"
        CONTACT-INFO
            "WG E-mail:  stds-802-16@ieee.org
             WG Chair:   Roger B. Marks
             Postal:     WiMAX Forum
             E-mail:     r.b.marks@ieee.org

             TG Chair:   Jonathan Labs
             Postal:     Wavesat Inc.
             E-mail:     JLabs@wavesat.com

             TG Contact: Phillip Barber
             Postal:     Huawei Technologies Co., Ltd
             E-mail:     pbarber@Huawei.com

             Editor:     Joey Chou
             Postal:     Intel Corporation
                         5000 W. Chandler Blvd,
                         Chandler, AZ 85227, USA
             E-mail:     joey.chou@intel.com"
        DESCRIPTION
          "This MIB Module defines common textual conventions for
           IEEE Std 802.16REV2 standard MIBs."
        REVISION        "200901280000Z"
        DESCRIPTION
            "Includes changeas per comment resolutions agreed at the
             San Diego meeting"
        REVISION        "200812010000Z"
        DESCRIPTION
            "Includes changes as per comment resolutions agreed at the
             Dallas meeting"
        REVISION        "200810010000Z"
        DESCRIPTION
            "Includes changes as per comment resolutions agreed at the
             Kobe meeting"
        REVISION        "200807220000Z"
        DESCRIPTION
            "Includes changes as per comment resolutions agreed at the
             Denver meeting"
        REVISION        "200805270000Z"
        DESCRIPTION
            "Includes changes as per comment resolutions agreed at the
```



```
             Macau meeting"
        REVISION        "200803310000Z"
        DESCRIPTION
            "The 1st revision of WMAN-IF2-TC-MIB module."
        ::= { iso std(0) iso8802(8802) wman(16) 6 }

--
-- Textual Conventions
--
WmanIf2TcBsIdType ::= TEXTUAL-CONVENTION
        STATUS      current
        DESCRIPTION
            "Defines the encoding of BSID. The BSID is a 6 byte number
             and follows the encoding rules of MacAddress textual
             convention, i.e. as if it were transmitted
             least-significant bit first. The value should be displayed
             with 2 parts clearly separated by a colon e.g:
             001DFF:00003A. The most significant part is representing
             the Operator ID."
        SYNTAX OCTET STRING (SIZE (6))

WmanIf2TcChannelNumber ::= TEXTUAL-CONVENTION
        STATUS      current
        DESCRIPTION
            "Physical channel number"
        SYNTAX      Integer32 (0..199)

WmanIf2TcCidType ::= TEXTUAL-CONVENTION
        STATUS      current
        DESCRIPTION
            "Type of CID."
        SYNTAX      Integer32 (0..65535)

WmanIf2TcCsType ::= TEXTUAL-CONVENTION
        STATUS      current
        DESCRIPTION
            "Defines the types of convergence sublayer."
        REFERENCE
            "Subclause 11.13.18.1"
        SYNTAX      INTEGER {gpcs(0),
                             packetIpV4(1),
                             packetIpV6(2),
                             packet802dot3Ethernet(3),
                             reserved4(4),
                             packetIpV4Over802dot3(5),
                             packetIpV6Over802dot3(6),
                             reserved7(7),
                             reserved8(8),
                             atm(9),
                             reserved10(10),
                             reserved11(11),
                             reserved12(12),
                             reserved13(13),
                             packetIp(14)}
```

```
WmanIf2TcIpv6FlowLabel ::= TEXTUAL-CONVENTION
        STATUS      current
        DESCRIPTION
            "The value of this field specifies the matching values for
             the IPv6 Flow label field. As the flow label field has a
             length of 20 bits, the first 4 bits of the most significant
             byte shall be set to 0x0 and disregarded."
        SYNTAX      OCTET STRING (SIZE (3))

WmanIf2TcPhsRuleVerify ::= TEXTUAL-CONVENTION
         STATUS      current
         DESCRIPTION
             "The value of this field indicates to the sending entity
              whether or not the packet header contents are to be
              verified prior to performing suppression. If PHSV is
              enabled, the sender shall compare the bytes in the packet
              header with the bytes in the PHSF that are to be
              suppressed as indicated by the PHSM."
         REFERENCE
             "Subclause 11.13.18.3.5.5"
         SYNTAX      INTEGER {phsVerifyEnable(0),
                              phsVerifyDisable(1)}

WmanIf2TcSchedulingType ::= TEXTUAL-CONVENTION
         STATUS      current
         DESCRIPTION
             "The scheduling service provided by a SC for an upstream
              service flow. If the parameter is omitted from an upstream
              QOS Parameter Set, this object takes the value of
              bestEffort (2). This parameter must be reported as
              undefined (1) for downstream QOS Parameter Sets."
         REFERENCE
             "Subclause 11.13.10"
         SYNTAX      INTEGER {undefined(1),
                              bestEffort(2),
                              nonRealTimePollingService(3),
                              realTimePollingService(4),
                              extRealTimePollingService(5),
                              unsolicitedGrantService(6)}

WmanIf2TcGlobalSrvClass ::= TEXTUAL-CONVENTION
         STATUS      current
         DESCRIPTION
             "Global Service Class Name contains 8 information fields
              that map to predefined QoS attributes as shown in
              subclause 6.3.14.4.1.

              bit 0:     Uplink/Downlink indicator
                         0 - uplink
                         1 - downlink
              bit 1-6:   Maximum sustained traffic rate in bps that is
                         defined in Table 124b
              bit 7:     0 - no traffic indication
```



```
                  1 - traffic indication
        bit 8-13:  Maximum traffic burst defines the maximum burst
                  size that must be accommodated for the service.
        bit 14-19: Minimum reserved traffic rate parameter
                  specifies the minimum rate, in bits per second,
                  reserved for this service flow.
        bit 20-25: Maximum latency specifies the maximum interval
                  between the reception of a packet at CS of BS
                  or SS and the arrival of the packet to the peer
                  device.
        bit 26:    SDU indicator specifies whether the SDUs on the
                  service flow are fixed-length or
                  variable-length.
                  0 - variable length
                  1 - fixed length
        bit 27:    Paging indicator of an MS preference for the
                  reception of paging advisory messages during
                  idle mode. When set, it indicates that the BS
                  may present paging advisory messages or other
                  indicative messages to the MS when data SDUs
                  bound for the MS are present while the MS is in
                  Idle Mode.
                  0 - no paging generation
                  1 - paging generation
        bit 28-35: Req/Tx Policy - An attribute is enabled by
                  setting the corresponding bit position to 1.
                  For attributes affecting UL BR types, a value
                  of zero indicates the default actions described
                  in the scheduling service description in 6.3.5
                  shall be used. A value of 1 indicates that the
                  action associated with the attribute bit
                  overrides the default action.
        bit28:     No broadcast BR opportunities. (UL only)
        bit29:     No use multicast BR opportunities. (UL only)
        bit30:     No piggyback requests with data. (UL only)
        bit31:     No fragment data.
        bit32:     No suppress payload headers (CS parameter).
        bit33:     No pack multiple SDUs (or fragments)
                  into single MAC PDUs.
        bit34:     Not include CRC in the MAC PDU.
        bit35:     Reserved
        bit 36-38: The value of this parameter specifies the UL
                  grant scheduling type that shall be enabled for
                  the associated UL service flow (see 6.3.5.2).
            Value  = 1: Undefined (BS implementation-dependenta)
                     2: BE (default)
                     3: nrtPS
                     4: rtPS
                     5: Extended rtPS
                     6: UGS"
REFERENCE
    "Subclause 6.3.14.4.1 Table 185"
SYNTAX      BITS {ulDlIndicator(0),
                  maxSustainedRate0(1),
```

```
                              maxSustainedRate1(2),
                              maxSustainedRate2(3),
                              maxSustainedRate3(4),
                              maxSustainedRate4(5),
                              maxSustainedRate5(6),
                              trafficIndication(7),
                              maxTrafficBurst0(8),
                              maxTrafficBurst1(9),
                              maxTrafficBurst2(10),
                              maxTrafficBurst3(11),
                              maxTrafficBurst4(12),
                              maxTrafficBurst5(13),
                              minReservedRate0(14),
                              minReservedRate1(15),
                              minReservedRate2(16),
                              minReservedRate3(17),
                              minReservedRate4(18),
                              minReservedRate5(19),
                              maxLatency0(20),
                              maxLatency1(21),
                              maxLatency2(22),
                              maxLatency3(23),
                              maxLatency4(24),
                              maxLatency5(25),
                              sduIndicator(26),
                              pagingGeneration(27),
                              noBroadcastBr(28),
                              noMulticastBr(29),
                              noPiggybackReq(30),
                              noFragmentData(31),
                              noSurpressPayload(32),
                              noPackedSdu(33),
                              noCrcInMacPdu(34),
                              ulGrantType0(35),
                              ulGrantType1(36),
                              ulGrantType2(37)}

WmanIf2TcHarqAckDelay ::= TEXTUAL-CONVENTION
         STATUS      current
         DESCRIPTION
             "HARQ ACK delay for UL and DL bursts
              1 = one frame offset
              2 = two frames offset
              3 = three frames offset"
         REFERENCE
              "Table 574"
         SYNTAX      INTEGER {oneframeoffset(1),
                              twoframesoffset(2),
                              threeframesoffset(3)}

WmanIf2TcMacVersion ::= TEXTUAL-CONVENTION
         STATUS      current
         DESCRIPTION
             "Version number of IEEE 802.16."
```



```
        REFERENCE
            "Subclause 11.1.3"
        SYNTAX      INTEGER {ieee802Dot16Of2001(1),
                             ieee802Dot16cOf2002andPredcessors(2),
                             ieee802Dot16aOf2003andPredcessors(3),
                             ieee802Dot16Of2004(4),
                             ieee802Dot16Of2004and16eOf2005(5),
                             ieee802Dot16Of2004and16efOf2005(6),
                             ieee802Dot16Of04and16efOf05and16gOf07(7),
                             ieee802Dot16Of2009(8)}

WmanIf2TcOfdmaCp ::= TEXTUAL-CONVENTION
        STATUS      current
        DESCRIPTION
            "Cycle prefix for OFDMA PHY
             0b00 = 1/4
             0b01 = 1/8
             0b10 = 1/16
             0b11 = 1/32"
        REFERENCE
             "Subclause 11.18.2, Table 611"
        SYNTAX      INTEGER {oneForth(0),
                             oneEighth(1),
                             oneSixteenth(2),
                             oneThirtySecond(3)}

WmanIf2TcOfdmaFftSize ::= TEXTUAL-CONVENTION
        STATUS      current
        DESCRIPTION
            "FFT size for OFDMA PHY
             0b000 = 2048
             0b001 = 1024
             0b010 = 512
             0b100 = 128"
        REFERENCE
             "Subclause 11.8.3.5.1"
        SYNTAX      INTEGER {fft2048(0),
                             fft1024(1),
                             fft512(2),
                             reserved(3),
                             fft128(4)}

WmanIf2TcOfdmaFrame ::= TEXTUAL-CONVENTION
        STATUS      current
        DESCRIPTION
            "Frame duration for OFDMA PHY
             0b0000 = 2.0 ms
             0b0001 = 2.5 ms
             0b0010 = 4 ms
             0b0011 = 5 ms
             0b0100 = 8 ms
             0b0101 = 10 ms
             0b0110 = 12.5 ms
             0b0111 = 20 ms"
```

```
         REFERENCE
             "Subclause 11.18.2, Table 612"
         SYNTAX      INTEGER {twoMs(0),
                              twoPointFiveMs(1),
                              fourMs(2),
                              fiveMs(3),
                              eightMs(4),
                              tenMs(5),
                              twelvePointFiveMs(6),
                              twentyMs(7)}

WmanIf2TcReqTxPolicy ::= TEXTUAL-CONVENTION
         STATUS      current
         DESCRIPTION
             "Specify certain attributes for the associated service
              flow. An attribute is enabled by setting the
              corresponding bit position to 1.

              bit 0: Service flow shall not use broadcast bandwidth
                     request opportunities. (Uplink only)
              bit 1: Service flow shall not use multicast BR
                     opportunities. (UL only)
              bit 2: The service flow shall not piggyback requests with
                     data. (Uplink only)
              bit 3: The service flow shall not fragment data.
              bit 4: The service flow shall not suppress payload headers
                     (CS parameter)
              bit 5: The service flow shall not pack multiple SDUs (or
                     fragments) into single MAC PDUs.
              bit 6: The service flow shall not include CRC in the MAC
                     PDU."
         REFERENCE
             "Subclause 11.13.11"
         SYNTAX      BITS {noBroadcastBwReq(0),
                           noMulticastBwReq(1),
                           noPiggybackReq(2),
                           noFragmentData(3),
                           noPHS(4),
                           noSduPacking(5),
                           noCrc(6),
                           reserved2(7)}

WmanIf2TcSfDirection ::= TEXTUAL-CONVENTION
         STATUS      current
         DESCRIPTION
             "The direction of a service flow"
         SYNTAX      INTEGER {downstream(1),
                              upstream(2)}

WmanIf2TcFrameOffset ::= TEXTUAL-CONVENTION
         STATUS      current
         DESCRIPTION
             "Bits #0-3: Frame_offset_CQICH
                 The offset between the frame of the corresponding CQI
```



```
                channel and the current frame. 0x0 shall not be used.
             Bits #4-7: Frame_offset_Data
                The offset between the frame of the corresponding UL
                burst and the current frame. 0x0 shall not be used."
         REFERENCE
             "Subclause 8.4.5.4.29"
         SYNTAX      BITS {frameOffsetCQICH0(0),
                           frameOffsetCQICH1(1),
                           frameOffsetCQICH2(2),
                           frameOffsetCQICH3(3),
                           frameOffsetData0(4),
                           frameOffsetData1(5),
                           frameOffsetData2(6),
                           frameOffsetData3(7)}

WmanIf2TcPwrCntlBits ::= TEXTUAL-CONVENTION
         STATUS      current
         DESCRIPTION
             "Bits #0-1: Bq
                  C power control commands with (Bq+1) bits each.
                  0x00(1 bit): '0' = -0.5dB, '1=+0.5dB
                  0x01(2 bits): '00 = -0.5dB, '01' = 0dB,
                                '10 = +0.5dB, '11' = +1.0dB
                  0x02(3 bits): '000 = -1.5dB - '111' = +2.0dB,
                                step size = 0.5dB
                  0x03(4 bits): '0000' = -3.5dB - '1111' = +4.0dB,
                                step size = 0.5dB
             Bits #2-3: Bd
                  D power control commands with (Bd+1) bits each.
                  0x00(1 bit): '0' = -0.5dB, '1=+0.5dB
                  0x01(2 bits): '00 = -0.5dB, '01' = 0dB,
                                '10 = +0.5dB, '11' = +1.0dB
                  0x02(3 bits): '000 = -1.5dB - '111' = +2.0dB,
                                step size = 0.5dB
                  0x03(4 bits): '0000' = -3.5dB - '1111' = +4.0dB,
                                step size = 0.5dB"
         REFERENCE
             "Subclause 8.4.5.4.29"
         SYNTAX      BITS {bq0(0),
                           bq1(1),
                           bq2(2),
                           bq3(3),
                           bd0(4),
                           bd1(5),
                           bd2(6),
                           bd3(7)}

WmanIf2TcFddDlGrpGap ::= TEXTUAL-CONVENTION
         STATUS      current
         DESCRIPTION
             "Bit 0: Indicates the location of the fractional symbols
                     period - unusable DL time in each frame
                     0x0 - in between DL1 and DL2
                     0x1 – end of DL2
```

```
              Bits 1-2: integer portion of the inter-group gap (# of
                        symbols, i.e., 0,1,2,3 symbols)."
         REFERENCE
             "Subclause 8.4.4.1"
         SYNTAX      BITS {gapLocation(0),
                           interGroup1(1),
                           interGroup2(2)}

WmanIf2TcAasBeamSel ::= TEXTUAL-CONVENTION
        STATUS      current
        DESCRIPTION
            "Boolean to indicate whether unsolicited AAS Beam Select
             messages (see 6.3.2.3.36) should be sent by the MS.
               0: MS should not send AAS Beam Select Messages
               1: MS may send AAS Beam Select Messages"
        REFERENCE
            "Table 570"
        SYNTAX      INTEGER {notAllowed(0),
                             allowed(1)}

WmanIf2TcTxPowerReport ::= TEXTUAL-CONVENTION
        STATUS      current
        DESCRIPTION
            "Bits 0-3:   Tx_Power_Report_Threshold, It is unsigned
                         integer and shall be read in dB scale.
             Bits 4-7:   It is unsigned integer whose value is d. Its
                         value 'd' shall be interpreted as
                         Tx_Power_Report_Interval = 2 ^ d.
             Bits 8-11:  ap_avg in multiples of 1/16 (range[1/16,16/16])
             Bits 12-15: Tx_Power_Report_Threshold, It is unsigned
                         integer and shall be read in dB scale. It shall
                         be used when CQICH is allocated to the SS.
             Bits 16-19: It is unsigned integer whose value is d. Its
                         value 'd' shall be interpreted as
                         Tx_Power_Report_Interval = 2 ^ d frames. It
                         shall be used when CQICH is allocated to the SS
            Bits 20-23: ap_avg in multiples of 1/16 (range [1/16,16/16])
                         , It shall be used when CQICH is allocated to
                         the SS."
        REFERENCE
            "Table 570"
        SYNTAX      BITS {tprThreshold0(0),
                          tprThreshold1(1),
                          tprThreshold2(2),
                          tprThreshold3(3),
                          tprInterval0(4),
                          tprInterval1(5),
                          tprInterval2(6),
                          tprInterval3(7),
                          tprApAvg0(8),
                          tprApAvg1(9),
                          tprApAvg2(10),
                          tprApAvg3(11),
                          cqichTprThreshold0(12),
```



```
                          cqichTprThreshold1(13),
                          cqichTprThreshold2(14),
                          cqichTprThreshold3(15),
                          cqichTprInterval0(16),
                          cqichTprInterval1(17),
                          cqichTprInterval2(18),
                          cqichTprInterval3(19),
                          cqichTprApAvg0(20),
                          cqichTprApAvg1(21),
                          cqichTprApAvg2(22),
                          cqichTprApAvg3(23)}

WmanIf2TcUlPhyModeId ::= TEXTUAL-CONVENTION
        STATUS      current
        DESCRIPTION
            "UL Phy Mode ID:
             Bits #0-7:   Channel bandwidth in units of 125 kHz
             Bits #8-10:  FFT size
                  0b000 = 2048
                  0b001 = 1024
                  0b010 = 512
                  0b011 = 128
                  0b100 – 0b111: reserved
             Bits #11-13: Cycle Prefix (CP)
                  0b001 = 1/8
                  0b010 = 1/16
                  0b011 = 1/32
                  0b100 – 0b111: reserved"
        REFERENCE
            "Table 570"
        SYNTAX      BITS {channelBw0(0),
                          channelBw1(1),
                          channelBw2(2),
                          channelBw3(3),
                          channelBw4(4),
                          channelBw5(5),
                          channelBw6(6),
                          channelBw7(7),
                          fftSize0(8),
                          fftSize1(9),
                          fftSize2(10),
                          cyclePrefix0(11),
                          cyclePrefix1(12),
                          cyclePrefix2(13)}

WmanIf2TcFastFeedback ::= TEXTUAL-CONVENTION
        STATUS      current
        DESCRIPTION
            "Contains same fields as in the FAST FEEDBACK Allocation
             IE in Table 372:
             Bits #0-2:   reserved
             Bits #3-9:   num subchannels
             Bits #10-16: num OFDMA symbols
             Bits #17-23: subchannel offset
```

```
             Bits #24-31: OFDMA symbol offset
             Bits #32-34: Parameter d that defines periodicity of 2 ^ d
                          frames
             Bits #35-39: Allocation phase expressed in frames"
        REFERENCE
            "Table 570"
        SYNTAX      BITS {reserved0(0),
                          reserved1(1),
                          reserved2(2),
                          subChannel0(3),
                          subChannel1(4),
                          subChannel2(5),
                          subChannel3(6),
                          subChannel4(7),
                          subChannel5(8),
                          subChannel6(9),
                          ofdmaSymbol0(10),
                          ofdmaSymbol1(11),
                          ofdmaSymbol2(12),
                          ofdmaSymbol3(13),
                          ofdmaSymbol4(14),
                          ofdmaSymbol5(15),
                          ofdmaSymbol6(16),
                          subChannelOffset0(17),
                          subChannelOffset1(18),
                          subChannelOffset2(19),
                          subChannelOffset3(20),
                          subChannelOffset4(21),
                          subChannelOffset5(22),
                          subChannelOffset6(23),
                          ofdmaSymbolOffset0(24),
                          ofdmaSymbolOffset1(25),
                          ofdmaSymbolOffset2(26),
                          ofdmaSymbolOffset3(27),
                          ofdmaSymbolOffset4(28),
                          ofdmaSymbolOffset5(29),
                          ofdmaSymbolOffset6(30),
                          ofdmaSymbolOffset7(31),
                          periodiicityFrames0(32),
                          periodiicityFrames1(33),
                          periodiicityFrames2(34),
                          allocationFrames0(35),
                          allocationFrames1(36),
                          allocationFrames2(37),
                          allocationFrames3(38),
                          allocationFrames4(39)}

WmanIf2TcHarqAckRegion ::= TEXTUAL-CONVENTION
        STATUS      current
        DESCRIPTION
            "Bits #0-3:   num subchannels
             Bits #4-8:   No. OFDMA symbols
             Bits #9-15:  Subchannel offset
             Bits #16-23: OFDMA Symbol offset
```



```
             Bit 24-26,  Parameter d that defines periodicity of
                           2^d frames
             Bit 27-31,  Allocation phase expressed in frames"
        REFERENCE
            "Table 570"
        SYNTAX      BITS {numOfSubchannels0(0),
                          numOfSubchannels1(1),
                          numOfSubchannels2(2),
                          numofSubchannels3(3),
                          numOfOfdmaSym0(4),
                          numOfOfdmaSym1(5),
                          numOfOfdmaSym2(6),
                          numOfOfdmaSym3(7),
                          numOfOfdmaSym4(8),
                          subChannelOffset0(9),
                          subChannelOffset1(10),
                          subChannelOffset2(11),
                          subChannelOffset3(12),
                          subChannelOffset4(13),
                          subChannelOffset5(14),
                          subChannelOffset6(15),
                          ofdmaSymbolOffset0(16),
                          ofdmaSymbolOffset1(17),
                          ofdmaSymbolOffset2(18),
                          ofdmaSymbolOffset3(19),
                          ofdmaSymbolOffset4(20),
                          ofdmaSymbolOffset5(21),
                          ofdmaSymbolOffset6(22),
                          ofdmaSymbolOffset7(23),
                          periodicityFrames0(24),
                          periodicityFrames1(25),
                          periodicityFrames2(26),
                          allocationFrames0(27),
                          allocationFrames1(28),
                          allocationFrames2(29),
                          allocationFrames3(30),
                          allocationFrames4(31)}

WmanIf2TcRangingRegion ::= TEXTUAL-CONVENTION
        STATUS      current
        DESCRIPTION
            "The value of TLV consists of up to 4 concatenated sections
             (one section per Ranging method), each having the following
             structure:

             Bits #0:     dedicated ranging indicator
             Bits #1-2:   ranging method
             Bits #3-9:   num subchannels
             Bits #10-16: num OFDMA symbols
             Bits #17-23: subchannel offset
             Bits #24-31: OFDMA symbol offset
             Bit 32-34,  Parameter d that defines periodicity of
                           2^d frames
             Bit 35-39,  Allocation phase expressed in frames"
```

```
        REFERENCE
            "Table 570"
        SYNTAX      BITS {dedicatedRangingInd(0),
                          rangingMethod0(1),
                          rangingMethod1(2),
                          numOfSubchannels0(3),
                          numOfSubchannels1(4),
                          numOfSubchannels2(5),
                          numOfSubchannels3(6),
                          numOfSubchannels4(7),
                          numOfSubchannels5(8),
                          numOfSubchannels6(9),
                          numOfOfdmaSym0(10),
                          numOfOfdmaSym1(11),
                          numOfOfdmaSym2(12),
                          numOfOfdmaSym3(13),
                          numOfOfdmaSym4(14),
                          numOfOfdmaSym5(15),
                          numOfOfdmaSym6(16),
                          subchannelOffset0(17),
                          subchannelOffset1(18),
                          subchannelOffset2(19),
                          subchannelOffset3(20),
                          subchannelOffset4(21),
                          subchannelOffset5(22),
                          subchannelOffset6(23),
                          ofdmaSymbolOffset0(24),
                          ofdmaSymbolOffset1(25),
                          ofdmaSymbolOffset2(26),
                          ofdmaSymbolOffset3(27),
                          ofdmaSymbolOffset4(28),
                          ofdmaSymbolOffset5(29),
                          ofdmaSymbolOffset6(30),
                          ofdmaSymbolOffset7(31),
                          periodicityFrames0(32),
                          periodicityFrames1(33),
                          periodicityFrames2(34),
                          allocationFrames0(35),
                          allocationFrames1(36),
                          allocationFrames2(37),
                          allocationFrames3(38),
                          allocationFrames4(39)}

WmanIf2TcSoundingRegion ::= TEXTUAL-CONVENTION
        STATUS      current
        DESCRIPTION
            "For 5 bytes per each sounding region
             Bits #0:     reserved
             Bits #1-2:   PAPR Reduction/Safety zone
             Bits #3-9:   num subchannels
             Bits #10-16: num OFDMA symbols
             Bits #17-23: subchannel offset
             Bits #24-31: OFDMA symbol offset
             Bit 32–34,  Parameter d that defines periodicity of
```



```
                        2^d frames
             Bit 35-39,  Allocation phase expressed in frames"
        REFERENCE
            "Table 570"
        SYNTAX      BITS {reserved(0),
                          paprReductionSafetyZone0(1),
                          paprReductionSafetyZone1(2),
                          numOfSubchannels0(3),
                          numOfSubchannels1(4),
                          numOfSubchannels2(5),
                          numOfSubchannels3(6),
                          numOfSubchannels4(7),
                          numOfSubchannels5(8),
                          numOfSubchannels6(9),
                          numOfOfdmaSym0(10),
                          numOfOfdmaSym1(11),
                          numOfOfdmaSym2(12),
                          numOfOfdmaSym3(13),
                          numOfOfdmaSym4(14),
                          numOfOfdmaSym5(15),
                          numOfOfdmaSym6(16),
                          subchannelOffset0(17),
                          subchannelOffset1(18),
                          subchannelOffset2(19),
                          subchannelOffset3(20),
                          subchannelOffset4(21),
                          subchannelOffset5(22),
                          subchannelOffset6(23),
                          ofdmaSymbolOffset0(24),
                          ofdmaSymbolOffset1(25),
                          ofdmaSymbolOffset2(26),
                          ofdmaSymbolOffset3(27),
                          ofdmaSymbolOffset4(28),
                          ofdmaSymbolOffset5(29),
                          ofdmaSymbolOffset6(30),
                          ofdmaSymbolOffset7(31),
                          periodicityFrames0(32),
                          periodicityFrames1(33),
                          periodicityFrames2(34),
                          allocationFrames0(35),
                          allocationFrames1(36),
                          allocationFrames2(37),
                          allocationFrames3(38),
                          allocationFrames4(39)}

WmanIf2TcRssiCinrAvg ::= TEXTUAL-CONVENTION
        STATUS      current
        DESCRIPTION
            "Bits 0-3: Default averaging parameter for physical CINR
                       measurements, in multiples of 1/16 (range [1/16,
                       16/16], 0x0 for 1/16, 0xF for 16/16).
             Bits 4-7: Default averaging parameter for RSSI measurements
                       , in multiples of 1/16 (range [1/16, 16/16], 0x0
                       for 1/16, 0xF for 16/16)."
```

```
        REFERENCE
            "Table 574"
        SYNTAX      BITS {defaultCinrAvg0(0),
                          defaultCinrAvg1(1),
                          defaultCinrAvg2(2),
                          defaultCinrAvg3(3),
                          defaultRssiAvg0(4),
                          defaultRssiAvg1(5),
                          defaultRssiAvg2(6),
                          defaultRssiAvg3(7)}

WmanIf2TcMihCapability ::= TEXTUAL-CONVENTION
        STATUS      current
        DESCRIPTION
            "Indicates the IEEE 802.21 Media Independent Handover
             Services capability of the BS.
             Bit 0 = MIH (Media Independent Handover) support
             Bit 1 = Event Service support
             Bit 2 = Command Service support
             Bit 3 = Information Service support
             Bit 4 = Information Service support during network entry
             Bit 5 = ES/CS capability discovery support during network
                      entry"
        REFERENCE
            "Table 574"
        SYNTAX      BITS {mediaIndependentHandover(0),
                          eventService(1),
                          commandService(2),
                          informationService(3),
                          infoServiceDuringNtwkEntry(4),
                          esCsCapDiscoveryDuringNtwkEntry(5)}

WmanIf2TcHoSupportType ::= TEXTUAL-CONVENTION
        STATUS      current
        DESCRIPTION
            "The types of handover supported."
        REFERENCE
            "Table 574"
        SYNTAX      BITS {handover(0),
                          mdHandover(1),
                          fbssHandover(2)}

WmanIf2TcPermutationTyp ::= TEXTUAL-CONVENTION
        STATUS      current
        DESCRIPTION
            "Permutation type for broadcast region in HARQ zone"
        REFERENCE
            "Table 574"
        SYNTAX      INTEGER {pusc(1),
                             fusc(2),
                             optionalFusc(3),
                             amc(4)}

WmanIf2TcArqBlockSize ::= TEXTUAL-CONVENTION
```



```
        STATUS      current
        DESCRIPTION
            "For DSA-REQ and REG-REQ:
                Bit 0-3: encoding for proposed minimum block size (M)
                Bit 4-7: encoding for proposed maximum block size (N)
             where:
                The minimum block size is equal to 2^(M+4) and
                the maximum block size is equal to 2^(N+4), M<=6, N<=6,
                and M<=N"
        REFERENCE
             "Subclause 11.13.17.8"
        SYNTAX      BITS {m0(0),
                          m1(1),
                          m2(2),
                          m3(3),
                          n0(4),
                          n1(5),
                          n2(6),
                          n3(7)}

WmanIf2TcSduType ::= TEXTUAL-CONVENTION
        STATUS      current
        DESCRIPTION
            "specifies whether the SDUs on the service flow are
             fixed-length or variable length"
        REFERENCE
             "Subclause 11.13.15"
        SYNTAX      INTEGER {variableLength(0),
                             fixedLength(1)}

WmanIf2TcFsnType ::= TEXTUAL-CONVENTION
        STATUS      current
        DESCRIPTION
            "the size of the FSN for a connection."
        REFERENCE
             "Subclause 11.13.21"
        SYNTAX      INTEGER {threeBits(0),
                             elevenBits(1)}

WmanIf2TcMbsType ::= TEXTUAL-CONVENTION
        STATUS      current
        DESCRIPTION
            "the size of the FSN for a connection."
        REFERENCE
             "Subclause 11.13.22"
        SYNTAX      INTEGER {notAvailable(0),
                             mbsInServingBs(1),
                             mbsInMultiBsZone(2)}

WmanIf2TcSfState ::= TEXTUAL-CONVENTION
        STATUS      current
        DESCRIPTION
            "Defines the state of a service flow.
             'inactive' - A service flow is inactive, when the MS owns
```

```
                        this service flow has handoff to another BS.
            'provisioned' - A service flow is provisioned, but not
                            yet activated.
            'admitted' - This maps to the 1st phase of the two-phase
                        activation model that the bandwidth a service
                        flow is reserved. But, no traffic can be
                        sent on this service flow yet.
            'active' - This maps to the 2nd phase of the two-phase
                       activation model that bandwidth is granted,
                       (e.g., is actively sending UL maps containing
                       unsolicited grants for a UGS service flow)."
        REFERENCE
            "Subclause 6.3.14.2"
        SYNTAX      INTEGER {inactive(0),
                             provisioned(1),
                             admitted(2),
                             active(3)}

WmanIf2TcArqDeliveInOrder ::= TEXTUAL-CONVENTION
         STATUS      current
         DESCRIPTION
             "The value of this object indicates whether data is to be
              delivered by the receiving MAC to its client application
              in order or not."
         REFERENCE
             "Subclause 11.13.17.6"
         SYNTAX      INTEGER {orderOfDeliveryNotPreserved(0),
                              orderOfDeliveryPreserved(1)}

WmanIf2TcArqDelvInOrder ::= TEXTUAL-CONVENTION
         STATUS      current
         DESCRIPTION
             "The value of this object indicates whether data is to be
              delivered by the receiving MAC to its client application
              in order or not."
         REFERENCE
             "Subclause 11.13.17.6"
         SYNTAX      INTEGER {orderOfDeliveryNotPreserved(0),
                              orderOfDeliveryPreserved(1)}

WmanIf2TcPwrCntlMode ::= TEXTUAL-CONVENTION
        STATUS      current
        DESCRIPTION
            "Type of power cpntrol mode:
             0 - Closed-loop power control mode
             1 - Open loop power control passive mode with
                 Offset_SSperSS retention
             2 - Open-loop power control passive mode with
                 Offset_SSperSS reset
             3 - Open-loop power control active mode"
        REFERENCE
            "Table 161"
        SYNTAX      INTEGER {closedLoopPowerControl(0),
                             openLoopPassiveModeRetention(1),
```



```
                            openLoopPassiveModeReset(2),
                            openLoopActiveMode(3)}

WmanIf2TcCellType ::= TEXTUAL-CONVENTION
        STATUS      current
        DESCRIPTION
            "Cell type defines BS classes to be used by the MS in the
             network for cell selection and re-selection. The definition
             of these classes are out of scope of the specification.
             0 - 15 maps to BS classess 0 to 15"
        REFERENCE
            "Table 574"
        SYNTAX      INTEGER {bsClasses0(0),
                             bsClasses1(1),
                             bsClasses2(2),
                             bsClasses3(3),
                             bsClasses4(4),
                             bsClasses5(5),
                             bsClasses6(6),
                             bsClasses7(7),
                             bsClasses8(8),
                             bsClasses9(9),
                             bsClasses10(10),
                             bsClasses11(11),
                             bsClasses12(12),
                             bsClasses13(13),
                             bsClasses14(14),
                             bsClasses15(15)}

WmanIf2TcCidDescriptor ::= TEXTUAL-CONVENTION
        STATUS      current
        DESCRIPTION
            "a0-a4: number of reserved transport CIDs per MS
             m0-m10: see definition in Table 557"
         REFERENCE
             "Table 574"
        SYNTAX      BITS {a0(0),
                          a1(1),
                          a2(2),
                          a3(3),
                          a4(4),
                          m0(5),
                          m1(6),
                          m2(7),
                          m3(8),
                          m4(9),
                          m5(10),
                          m6(11),
                          m7(12),
                          m8(13),
                          m9(14),
                          m10(15)}

WmanIf2TcActionRule ::= TEXTUAL-CONVENTION
```

```
        STATUS      current
        DESCRIPTION
            "Classification Action Rule
             Bit 0: 0 = none.
                     1 = Discard packet"
         REFERENCE
             "Subclause 11.13.18.3.3.17"
        SYNTAX      BITS {discardPacket(0)}

WmanIf2TcIpTypOfServ ::= TEXTUAL-CONVENTION
        STATUS      current
        DESCRIPTION
            "The value of this TLV specifies the matching parameters for
             the IP Type of Service (TOS) octet. The 6 MSBs shall be set
             to a Differentiated Service Codepoint (DSCP), as specified
             by RFC 2474."
         REFERENCE
             "Subclause 11.13.18.3.3.17"
        SYNTAX      BITS {reserved0(0),
                          reserved1(1),
                          dscp1(2),
                          dscp2(3),
                          dscp3(4),
                          dscp4(5),
                          dscp5(6),
                          dscp6(7)}

WmanIf2TcClassifierMap ::= TEXTUAL-CONVENTION
        STATUS      current
        DESCRIPTION
            "A bit of of this object is set to 1 if the parameter
             indicated by the comment was present in the classifier
             encoding, and 0 otherwise."
        SYNTAX      BITS {priority(0),
                          ipProtocol(1),
                          ipMaskedSrcAddr(2),
                          ipMaskedDestAddr(3),
                          srcPort(4),
                          destPort(5),
                          destMacAddr(6),
                          srcMacAddr(7),
                          ethernetProtocol(8),
                          userPriority(9),
                          vlanId(10),
                          associatedPhsi(11),
                          ipv6FlowLabel(12),
                          actionRule(13),
                          ipTypeOfService(14)}

WmanIf2TcEthernetType ::= TEXTUAL-CONVENTION
        STATUS      current
        DESCRIPTION
            "Ethernet packet type"
         REFERENCE
```



```
            "Subclause 11.13.18.3.3.10"
        SYNTAX      INTEGER {none(0),
                             ethertype(1),
                             dsap(2)}
END
```

14. Management interfaces and procedures

This subclause defines the service primitives for use at C-SAP and M-SAP at BS and MS side of the radio interface. The specific mapping of service primitives to protocol messages in the backhaul network is out of scope of this standard.

14.1 Service primitive template

14.1.1 Universal naming schema for SAP service primitive

The primitive name defined on the SAP consists of three fields—SAP, Function, and Operation:

SAP
C—Control plane SAP
M—Management plane SAP

Function
ACM—Accounting Management
HO—Handover
IMM—Idle Mode Management
LBS—Location Based Services
MBS—Multicast Broadcast Service
NEM—Network Entry Management
RRM—Radio Resource Management
SFM—Service Flow Management
SM—Security Management
SMC—Secondary Management Connection
SSM—Subscriber Station Management

Operation
REQ—Request
RSP—Response to the REQ message
ACK—Acknowledgement to the reception of REQ or RSP or IND message
IND—Event Notification

These primitives are symmetrical between the IEEE 802.16 entity and the NCMS. That is, both the IEEE 802.16 entity (SS/MS or BS) and the NCMS can send these primitives depending on the functional behavior defined for M-SAP and C-SAP. ACK shall only be supported across the C-SAP.

— A service primitive of type REQ is used whenever a response to the primitive is solicited. If there is a REQ message on the radio interface, it is generally mapped to a REQ on C-SAP/M-SAP.
— A service primitive of type RSP is used in response to a REQ primitive. Moreover, if there is a RSP message on the radio interface, it is generally mapped to a RSP on C-SAP/M-SAP.
— A service primitive of type IND is used at C-SAP or M-SAP for event notification if a response to this primitive is not solicited, and if the primitive is not sent in response to a REQ primitive.
— A service primitive of type ACK can be used to acknowledge the receipt of a C-SAP primitive of type REQ, RSP, or IND.

The specific usage of these operation types for the respective control and management functions is specified in the subsequent subclauses.

The IEEE 802.16 entity shall support the primitives which are delivered through C-SAP or M-SAP interfacing with NCMS.

14.1.2 SAP service primitive object format

There are two types of services: M-SAP/C-SAP operation service primitive and M-SAP/C-SAP notification service primitive. The REQ and RSP operations shall use the operation service primitive and the IND operation shall use the notification service primitive. The ACK operation shall use the same primitive format as the primitive it acknowledges.

14.1.2.1 M-SAP/C-SAP operation service primitive

This primitive is defined as Primitive_name () with a parameter list.

The format shall be:

Primitive_name
(
Operation_Type,
Action_Type,
Destination,
Attribute_list
)

The parameters shall be described briefly in Table 650.

Table 650—M-SAP/C-SAP Operation Types

Parameter name	Mandatory/ Optional	
Operation_Type	M	Create, Delete, Get, Set, Action
Action_Type	O	When Operation_Type is Action, valid values for Action_Type are: Certificate_Verification, Context_Transfer, Idle_Mode_Initiation, Network_Re-Entry_from_Idle_Mode, HO-Serving, HO-Target, HO-Scan, HO-Mobile, Spare Capacity Report, PHY Report, Ranging, Registration, SS Basic Capability, Power On, Power Down, Reset, Hold, Normal, Deregistration, Location Update
Destination	M	This indicates the destination of the primitive. Allowed values are: SS or MS, BS, NCMS.
Attribute_list		Array of pair (Attribute_ID, Attribute_value). In Get request operation, Attribute_value is Null

14.1.2.2 M-SAP/C-SAP notification service primitive:

This primitive shall be defined as Primitive_name () with a parameter list.

The format shall be:

Primitive_name
(
Event_Type,
Destination,
Attribute_List
)

The parameters are described briefly in Table 651.

Table 651—M-SAP/C-SAP Event Types

Parameter name	Mandatory/Optional	
Event_Type	M	Specify the type of occurring event, valid values for Event_Type are: Accounting, EAP_Start, AK_Transfer, EAP_Transfer, Certificate_Information, SMC_PAYLOAD, IP_ALLOCATION, Paging Announce, HO-Start, HO-Cancel, HO-Scan, HO-CMPLT, MIH-IND, Spare Capacity Report, Neighbor-BS Radio Resource Status Update, NBR_BS_Update, Network attached, Location_Update_CMPLT, Reset, Hold, Normal, MBS Portion Layout, LBS
Destination	M	This indicates the destination of the primitive. Allowed values are: SS or MS, BS, NCMS.
Attribute_list	M	Array of pair (Attribute_ID, Attribute_value)

14.1.3 SAP service primitive flow diagram template

Four typical handshake scenarios shown in Figure 338. The procedures are applicable to BS and SS side.

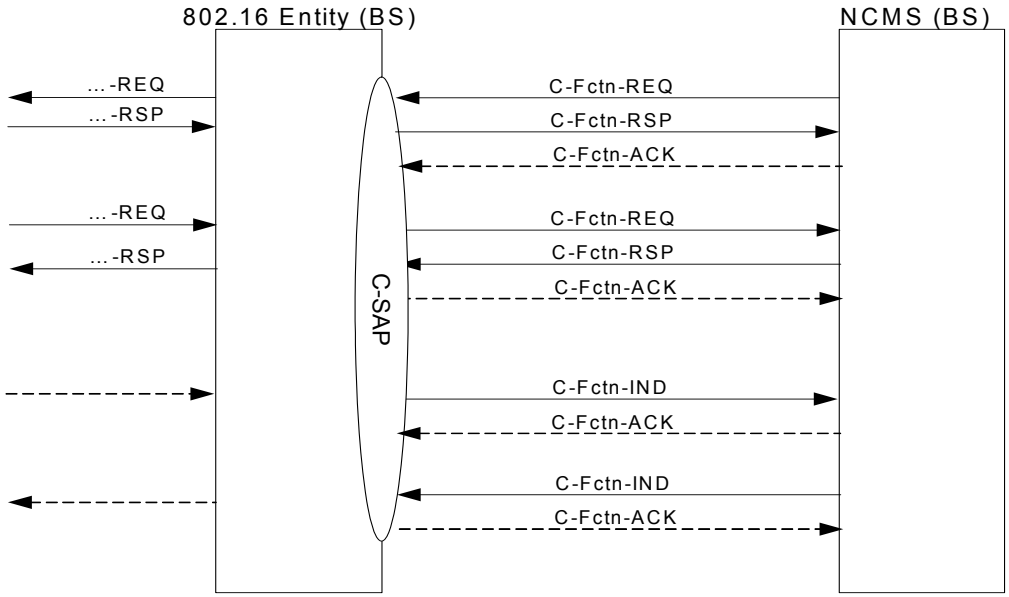

Figure 338—SAP Service primitive Flow Diagram template

The figure is illustrative only and provides an example of correct formatting of primitive figures.

14.2 Management and control functions

14.2.1 Accounting management

Accounting event can be detected for an SS Network Entry. Since each SS can have multiple connections at the same time, accounting event for each connection should be detected. Accounting for an SS Network Entry is initiated when the SS registers at the network and terminated when the SS deregisters from the network. Similarly, accounting for a connection is initiated at the dynamic service addition (DSA) instant of the connection and terminated at the dynamic service deletion (DSD) instant of the connection. Accounting management uses the AAA Services in the NCMS.

14.2.1.1 Accounting procedure

Accounting primitives consist of M-ACM-IND, M-ACM-REQ and M-ACM-RSP, as shown in Figure 339 and Figure 340. Figure 339 represents accounting primitives initiated by a BS when it receives REG-REQ, DREG-REQ, DSA-REQ/RSP, DSC-REQ/RSP, or DSD-REQ/RSP. Figure 340 represents accounting primitives initiated by the NCMS.

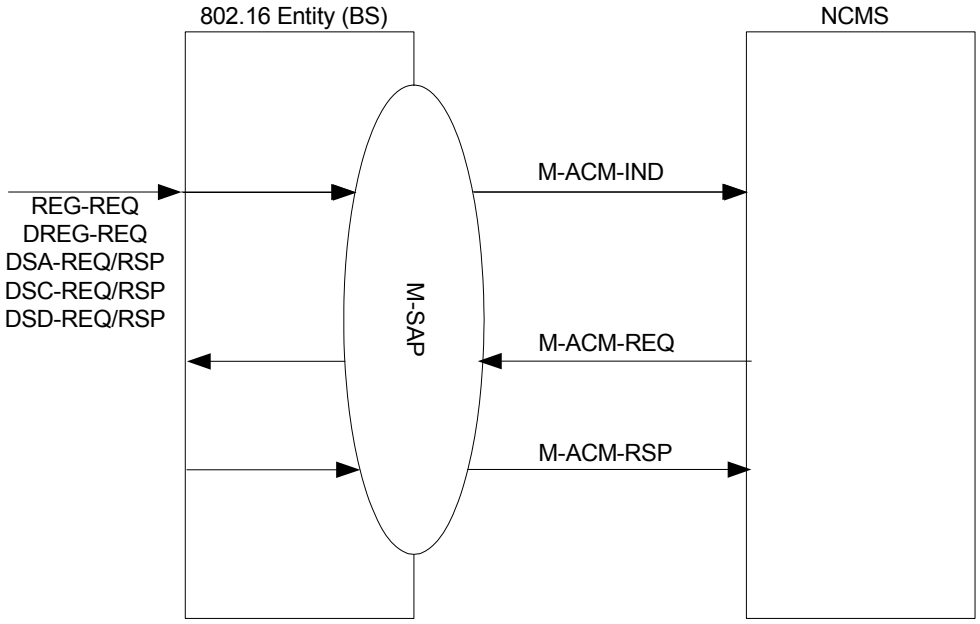

Figure 339—Accounting primitive initiated by a BS

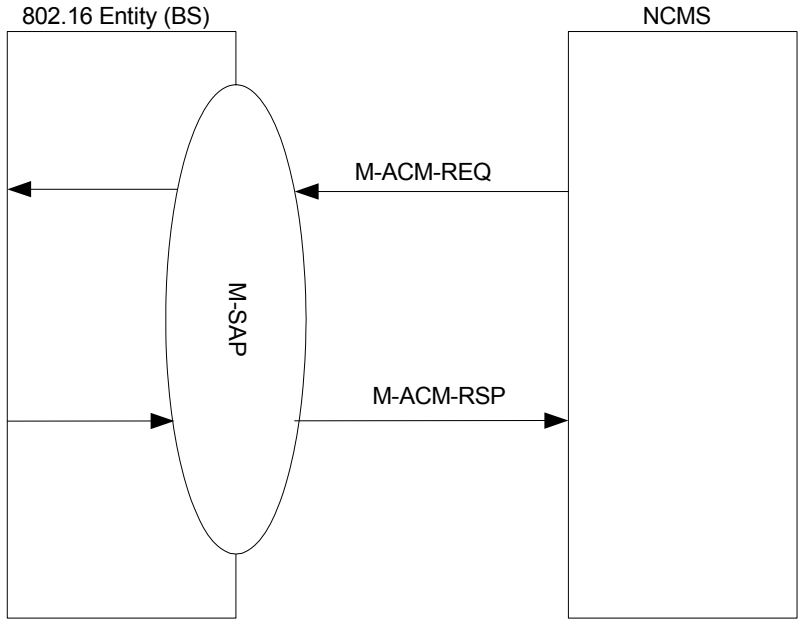

Figure 340—Accounting primitives initiated by the NCMS

14.2.1.2 Service primitives for accounting management

14.2.1.2.1 M-ACM-REQ

14.2.1.2.1.1 Function

This primitive can be issued by the NCMS to retrieve the accounting records from BS.

14.2.1.2.1.2 Semantics of the service primitive

The parameters of the primitive are as follows:

M-ACM-REQ
(
Operation_Type: Get,
Destination: BS,
Attribute_List:
SS MAC Address,
Service Flow Identifier,
Accounting Record Number,
Accounting Correlation Index
)

SS MAC Address
48-bit MAC address which identifies SS
Service Flow identifier
32-bit service flow identifier which will identify service flows of an SS
Accounting Record Number
Identifies accounting record within one session
Accounting Correlation Index
Provides a unique correlation index for generated records. This field can contain the Account Session ID or the Account-Multi-Session ID that is typically used by the AAA server to consolidate the session records.

14.2.1.2.1.3 When generated

This primitive can be generated at the NCMS to request accounting event from a BS.

14.2.1.2.1.4 Effect of receipt

Upon receiving this primitive from NCMS, the BS shall gather accounting information and return the information using the M-ACM-RSP primitive.

14.2.1.2.2 M-ACM-RSP

14.2.1.2.2.1 Function

This primitive is issued by a BS to respond to M-ACM-REQ.

14.2.1.2.2.2 Semantics of the service primitive

The parameters of the primitive are as follows:

M-ACM-RSP

(
Operation_Type: Get,
Destination: NCMS,
Attribute_List:
SS MAC Address,
Service Flow Identifier,
Accounting Record Number,
Accounting Octets,
Accounting Packets,
Service Flow Information,
Accounting Correlation Index
)

SS MAC Address
48-bit MAC address that identifies SS

Service Flow identifier
32-bit service flow identifier that will identify service flows of an SS, which the accounting information is provided for

Accounting Record Number
Identifies accounting record within one session

Accounting Octets
The number of octets recorded at the SS for the given service flow during the session.

Accounting Packets
The number of packets recorded at the SS for the given service flow during the session.

Service Flow Information
Required QoS information of the service flow, which the accounting information is provided for. It includes traffic characteristics and a scheduling type such as service class name, QoS parameter set type, maximum sustained traffic rate, maximum traffic burst, minimum reserved traffic rate, minimum tolerable traffic rate, service flow scheduling type, tolerate jitter and maximum latency.

Accounting Correlation Index
Provides a unique correlation index for generated records. This field can contain the Account Session ID or the Account-Multi-Session ID that is typically used by the AAA server to consolidate the session records.

14.2.1.2.2.3 When generated

This primitive shall be generated by the BS in response to an M-ACM-REQ primitive.

14.2.1.2.2.4 Effect of receipt

The NCMS receives the primitive, it contains the requested information and it is assumed that the NCMS will use this information for accounting purposes.

14.2.1.2.3 M-ACM-IND

14.2.1.2.3.1 Function

This primitive is issued by a BS to inform the NCMS of an accounting event for MS Network Entry after Registration request/response (REG-REQ/RSP), or Deregistration command (DREG-CMD) of an MS, or DSA/DSC/DSD-REQ/RSP events.

14.2.1.2.3.2 Semantics of the service primitive

The parameters of the primitive are as follows:

M-ACM-IND
(
Event_Type: Accounting,
Destination: NCMS,
Attribute_List:
SS MAC Address,
Service Flow Identifier,
Accounting Type
)

SS MAC Address
48-bit MAC address that identifies SS

Service Flow identifier
32-bit service flow identifier that will identify service flows of an SS, which the accounting information is provided for. This is valid only when accounting type is "service flow creation," "service flow change," or "service flow deletion."

Accounting Type
This identifies the type of accounting events; value range:
Registration,
Service Flow Creation,
Service Flow Change,
Service Flow Deletion,
De-registration

14.2.1.2.3.3 When generated

This primitive is generated at a BS when any accounting events have occurred.

14.2.1.2.3.4 Effect of receipt

NCMS will generate M-ACM-REQ primitive to retrieve the accounting records from BS.

14.2.2 Security management

14.2.2.1 EAP-based authentication procedure

When an SS tries to initiate an EAP-based authentication or re-authentication procedure with a BS, an NCMS(SS) sends a C-SM_IND/EAP_Start primitive to the IEEE 802.16 entity (SS) and the IEEE 802.16 entity (SS) sends a PKMv2 EAP_Start message. The BS informs the AAA Services entity in NCMS (i.e., the authenticator) by sending the C-SM-IND/EAP_Start primitive. If the SS receives EAP-Request/Identity messages, then it sends the EAP-Response/Identity message with SS MAC Address to the AAA Services entity. After the EAP-Response/Identity message, the EAP methods are negotiated between the SS and the AAA server and the EAP messages are exchanged several times. The EAP encapsulated messages are exchanged between the SS and the AAA Services entity. If the EAP authentication procedure is finished successfully and also yields an MSK (Master Session Key), the BS which does not know EAP protocols receives the AK and a key lifetime from the authenticator, which is part of the AAA Services entity, in the C-SM-IND/AK_Transfer primitive. The MSK is already shared between the AAA server and the SS through the EAP exchanges. The MSK is used by the SS and authenticator for derivation of the PMK (Pairwise Master Key) and optional EIK (EAP Integrity Key).

Figure 341 shows EAP-based authentication procedures between an IEEE 802.16 entity and the AAA and Security Services in NCMS as follows:

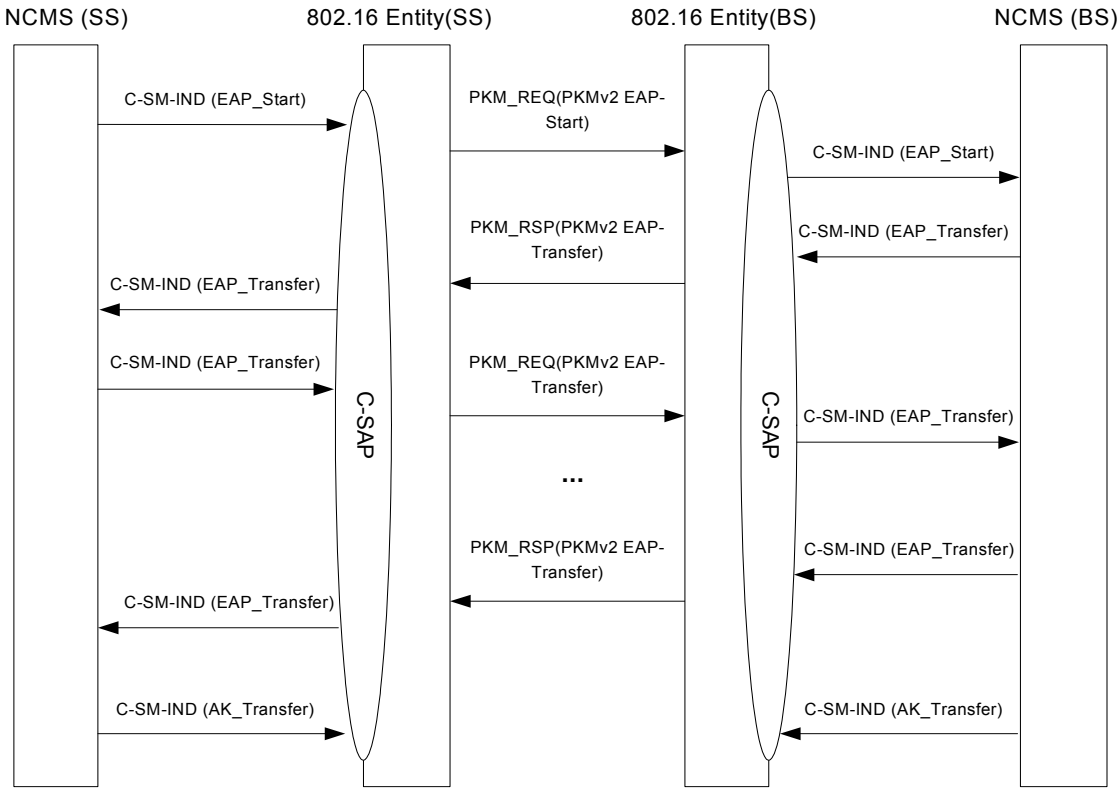

Figure 341—EAP based Authentication procedure

14.2.2.1.1 C-SM-IND

This primitive is used by an IEEE 802.16 entity or NCMS to notify security procedures. The Event_Type included in this primitive defines the type of security operation in Authentication and Re-authentication procedure to be performed. The possible Event_Types for this primitive are listed in the following table:

Event_Type	Description
EAP_Start	EAP Start
AK Transfer	AK Transfer notification
EAP_Transfer	Transfer EAP Payload

14.2.2.1.1.1 C-SM-IND (Event_Type = EAP_Start)

14.2.2.1.1.1.1 Function

This primitive informs an IEEE 802.16 entity (SS) or an NCMS(BS) that an SS is going to start an EAP-based authentication. The PKMv2 EAP_Start is sent by the SS to initiate either an initial EAP authentication or EAP re-authentication exchange.

14.2.2.1.1.1.2 Semantics of the service primitives

The parameters of the primitives are as follows:

C-SM-IND
(
Event_Type: EAP_Start,
Destination: NCMS, SS
Attribute_List:
SS MAC Address,
BSID
)
SS MAC Address
48-bit unique identifier used for user identification between BS and NCMS
BSID
48-bit unique identifier used for BS

14.2.2.1.1.1.3 When generated

— NCMS(SS) to IEEE 802.16 entity (SS): This primitive is issued by an NCMS(SS) when an SS wants to initiate EAP-based authentication procedure.
— IEEE 802.16 entity (BS) to NCMS(BS): This primitive is issued by an IEEE 802.16 entity (BS) in EAP procedure when an IEEE 802.16 entity (BS) receives a PKM-REQ message with PKMv2 EAP_Start.

14.2.2.1.1.1.4 Effect of receipt

— NCMS(SS) to IEEE 802.16 entity (SS): When received by the IEEE 802.16 entity (SS), the IEEE 802.16 entity (SS) forwards a PKM-REQ message with PKMv2 EAP_Start.
— IEEE 802.16 entity (BS) to NCMS(BS): When received by the NCMS(BS), the NCMS(BS) requests an AAA Authenticator to initiate an EAP-based authentication.

14.2.2.1.1.2 Reserved

14.2.2.1.1.3 C-SM-IND (Event_Type = AK Transfer)

14.2.2.1.1.3.1 Function

An NCMS derives the key from the EAP payloads, yields PMK from the MSK, then yields AK from the PMK, and informs the IEEE 802.16 entity of the AK when the EAP exchanges are successfully completed by the AAA service entities.

14.2.2.1.1.3.2 Semantics of the service primitives

The parameters of the primitives are as follows:

C-SM-IND
(
Event_Type: AK_Transfer,
Destination: BS, SS
Attribute_List:
SS MAC Address,
AK,
AK Lifetime,

AK Sequence Number,
AKID
)

SS MAC Address
48-bit unique identifier used for user identification between BS and NCMS

AK
AK is the product of PMK after successful EAP exchanges. It is used for protecting air interface messages and KEK.

AK Lifetime
AK Lifetime shall be set in accordance with PMK and MSK Lifetime. PMK and MSK Lifetime shall be transferred from the EAP method and could also be configured by the AAA Services.

AK Sequence Number
AK Sequence Number shall be derived from PMK Sequence Number.

AKID
It should be derived according to 7.2.2.4.1.

14.2.2.1.1.3.3 When generated

— NCMS(SS) to IEEE 802.16 entity (SS): This primitive is issued by the NCMS(SS) when the EAP procedure is finished.
— IEEE 802.16 entity (BS) to NCMS(BS): This primitive is issued by the NCMS(BS) (the AAA Services entity, i.e., Authenticator) when the EAP procedure is finished.

14.2.2.1.1.3.4 Effect of receipt

— NCMS(SS) to IEEE 802.16 entity (SS): The IEEE 802.16 entity (SS) could derive other AK context (HMAC/CMAC_KEY_U, HMAC/CMAC_KEY_D, HMAC/CMAC_PN_U, and HMAC/CMAC_PN_D, KEK).
— IEEE 802.16 entity (BS) to NCMS(BS): The IEEE 802.16 entity (BS) could derive other AK context (HMAC/CMAC_KEY_U, HMAC/CMAC_KEY_D, HMAC/CMAC_PN_U, and HMAC/CMAC_PN_D, KEK).

14.2.2.1.1.4 C-SM-IND (Event_Type = EAP_Transfer)

14.2.2.1.1.4.1 Function

After the C-SM-IND/EAP_Start primitive, EAP payloads are exchanged between an SS and an AAA server. The EAP payloads are encapsulated in the C-SM-IND/EAP_Transfer because it is not interpreted in the MAC. C-SM-IND/EAP_Transfer is used between the NCMS and the IEEE 802.16 entity.

14.2.2.1.1.4.2 Semantics of the service primitives

The parameters of the primitives are as follows:

C-SM-IND
(
Event_Type: EAP TRANSFER,
Destination: SS, BS or NCMS,
Attribute_list:
MS MAC Address,
EAP Payload
)

SS MAC Address

48-bit unique identifier used for user identification between BS and NCMS.

EAP Payload

The EAP authentication data.

14.2.2.1.1.4.3 When generated

— NCMS(SS) to IEEE 802.16 entity (SS): This primitive can be issued by a NCMS(SS) in an EAP procedure to transfer an EAP Message to an IEEE 802.16 entity (SS).
— IEEE 802.16 entity (BS) to NCMS(BS): This primitive can be issued by an IEEE 802.16 entity (BS) in an EAP procedure to transfer an EAP Message included in PKMv2 PKM-REQ message.
— NCMS(BS) to IEEE 802.16 entity (BS): This primitive can be issued by a NCMS(BS) in EAP procedure to transfer an EAP Message to an IEEE 802.16 entity (BS).
— IEEE 802.16 entity (SS) to NCMS(SS): This primitive can be issued by an IEEE 802.16 entity (SS) in EAP procedure to transfer an EAP Message included in PKMv2 PKM-RSP message.

14.2.2.1.1.4.4 Effect of receipt

— NCMS(SS) to IEEE 802.16 entity (SS): When received by an IEEE 802.16 entity (SS), the SS forwards EAP payload to the BS in a PKM-REQ message
— IEEE 802.16 entity (BS) to NCMS(BS): When received by NCMS(BS), the NCMS(BS) generates a next EAP payload or can derive PMK and optional EIK from the MSK, then AK context from PMK after a successful authentication procedure.
— NCMS(BS) to IEEE 802.16 entity (BS): When received by an IEEE 802.16 entity (BS), the BS forwards EAP payload to the SS in an PKM-RSP message.
— IEEE 802.16 entity (SS) to NCMS(SS): When received by NCMS(SS), the NCMS(SS) generates a next EAP payload or can derive PMK and optional EIK from the MSK, then AK context from PMK after a successful authentication procedure.

14.2.2.1.1.5 Reserved

14.2.2.2 RSA-based authentication procedure

When an SS tries to initiate an RSA-based authentication or re-authentication procedure with a BS, it sends PKM-REQ messages with Auth Info, Auth Request or PKMv2 RSA-Request message type. When an NCMS(SS) sends a C-SM-REQ/Certificate_Information primitive to an IEEE 802.16 entity (SS), the SS sends a PKM-REQ message with Auth Info message type, which includes a CA's certificate to the IEEE 802.16 entity (BS), and the IEEE 802.16 entity (BS) informs the NCMS(BS) by a C-SM-REQ/Certificate_Information primitive. The NCMS(BS) verifies the CA's certificate if it has no information about the CA and keeps the certificate.

When an NCMS(SS) sends a C-SM-REQ/Certificate_Verification primitive to the IEEE 802.16 entity(SS) to authenticate the SS and the IEEE 802.16 entity (SS) sends a PKM-REQ message with Auth Request or PKMv2 RSA-Request message type, the IEEE 802.16 entity (BS) notifies the NCMS(BS) by a C-SM-REQ/Certificate_Verification primitive. The NCMS(BS) verifies the SS's certificate through asking to a CA and an OCSP (Online Certificate Status Protocol) server. The NCMS returns the result of verification to the IEEE 802.16 entity (BS) whether the SS is authenticated or not as a C-SM-RSP/Certificate_Verification primitive. The IEEE 802.16 entity (BS) sends the result of authentication and security information to the IEEE 802.16 entity (SS) including security key information and the IEEE 802.16 entity (SS) returns the result as a C-SM-RSP/Certificate_Verification primitive.to the NCMS(SS).

Figure 342 shows an RSA-based authentication procedure between an IEEE 802.16 entity and an NCMS on the MS side and the BS side as follows:

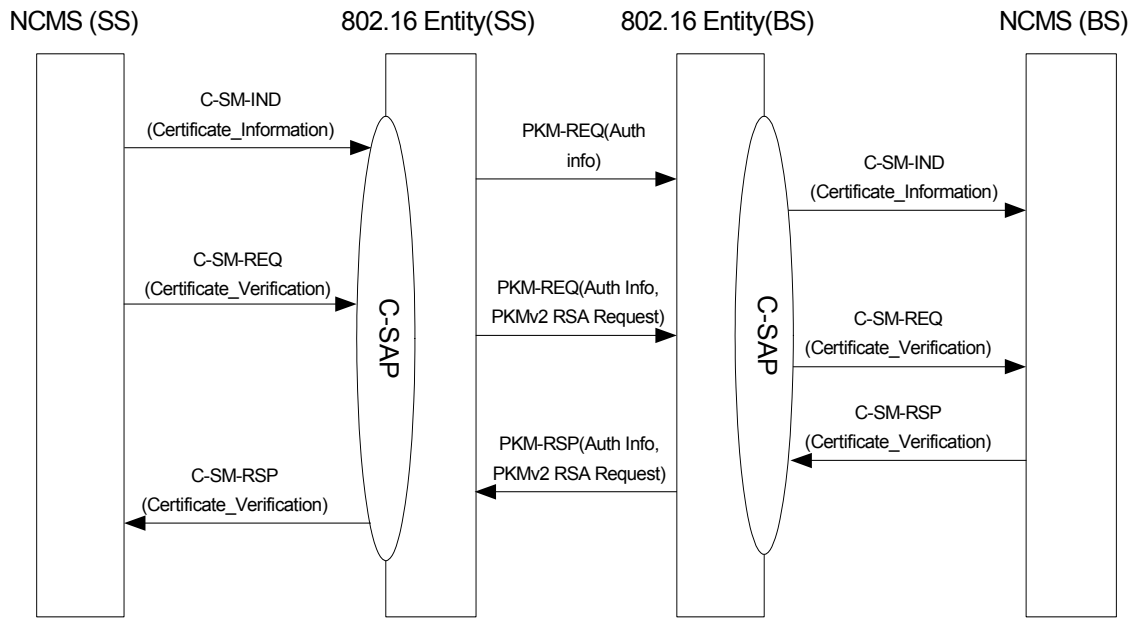

Figure 342—RSA-based authentication procedure

14.2.2.2.1 C-SM-IND

This primitive is used by an NCMS(SS) or an IEEE 802.16 entity (BS) to notify security procedures. The Event_Type included in this primitive defines the type of security operation in Authentication and Re-authentication procedure to be performed. The possible Event_Types for this primitive are listed in table below:

Event_Type	Description
Certificate Information	Certificate Information request

14.2.2.2.1.1 Function

This primitive informs the IEEE 802.16 entity (SS) of the certificate of the CA that issued the SS's certificate. In addition, this primitive informs the NCMS(BS) of the certificate of the CA that issued the SS's certificate.

14.2.2.2.1.2 Semantics of the service primitives

The parameters of the primitives are as follows:

C-SM-IND
(
Event_Type: Certificate_Information,
Destination: NCMS, SS,
Attribute_List:
SS MAC Address,
Certificate
}

MS MAC Address
48-bit unique identifier used for user identification between a BS and the NCMS
Certificate
Certificate of the CA that issues the SS's certificate

14.2.2.2.1.3 When generated

— NCMS(SS) to IEEE 802.16 entity (SS): This primitive is issued by the NCMS(SS) when the NCMS(SS) informs the BS of CA's certificate.
— IEEE 802.16 entity (BS) to NCMS(BS): This primitive is issued by an IEEE 802.16 entity(BS) (when the BS does not have CA's information that generates the certificate) when an SS informs the BS of CA's certificate.

14.2.2.2.1.4 Effect of receipt

— NCMS(SS) to IEEE 802.16 entity (SS): When received by the SS, the SS forwards a CA's certificate to BS via a PKM-REQ message.
— IEEE 802.16 entity (BS) to NCMS(BS): The NCMS(BS) has information for a CA's certificate and is able to verify an SS's certificate whether the SS's certificate is forged or not.

14.2.2.2.2 C-SM-REQ

This primitive is used by an NCMS(SS) or an IEEE 802.16 entity (BS) to trigger security procedure or request security information. The Action_Type included in this primitive defines the type of security operation in Authentication and Re-authentication procedure to be performed. The possible Action_Types for this primitive are listed in table below:

Action_Type	Description
Certificate Verification	Certificate Verification Request

14.2.2.2.2.1 Function

This primitive is used by an NCMS(SS) or an IEEE 802.16 entity (BS) to inform an IEEE 802.16 entity (SS) or the NCMS(BS) of an SS's certificate to authenticate the SS.

14.2.2.2.2.2 Semantics of the service primitives

The parameters of the primitive are as follows:

C-SM-REQ
(
Operation_Type: Action,
Action_Type: Certificate_Verification,
Destination: BS, NCMS,
Attribute_List:
SS MAC Address,
Certificate
)

SS MAC Address
48-bit unique identifier used for user identification between a BS and the NCMS
Certificate
SS's certificate that is issued by a trusted CA

14.2.2.2.2.3 When generated

— NCMS(SS) to IEEE 802.16 entity (SS): This primitive is issued by an NCMS(SS) when an SS requests a BS for authentication to access the network.
— IEEE 802.16 entity (BS) to NCMS(BS): This primitive can be issued by IEEE 802.16 entity(BS) in RSA procedure to transfer a SS's certificate included in a PKM-REQ message.

14.2.2.2.2.4 Effect of receipt

— NCMS(SS) to IEEE 802.16 entity (SS): When received by an IEEE 802.16 entity (SS), the SS forwards SS's certification in a PKM-REQ message to the BS.
— IEEE 802.16 entity (BS) to NCMS(BS): The NCMS(BS) verifies the validity of the SS's certificate.

14.2.2.2.3 C-SM-RSP

This primitive is used by an NCMS(BS) or an IEEE 802.16 entity (SS) to respond to the security information request. The Action_Type included in this primitive defines the type of security operation in Authentication and Reauthentication procedure to be performed. The possible Action_Types for this primitive are listed in table below:

Action_Type	Description
Certificate Verification	Certificate Verification Response

14.2.2.2.3.1 Function

This primitive informs the IEEE 802.16 entity (BS) or the NCMS(SS) of the result of the SS's authentication by the NCMS entity.

14.2.2.2.3.2 Semantics of the service primitives

The parameters of the primitives are as follows:

C-SM-RSP
(
Operation_Type: Action,
Action_Type: Certificate_Verification,
Destination: BS, NCMS,
Attribute_List:
SS MAC Address,
Result
)

SS MAC Address
48-bit unique identifier used for user identification between a BS and the NCMS
Result
Result of authentication such as valid, forged or revoked

14.2.2.2.3.3 When generated

— NCMS(BS) to IEEE 802.16 entity (BS): This primitive informs the IEEE 802.16 entity(BS) about the authentication result.
— IEEE 802.16 entity (SS) to NCMS(SS): This primitive informs the NCMS(SS) about the authentication result.

14.2.2.2.3.4 Effect of receipt

— NCMS(BS) to IEEE 802.16 entity (BS): The IEEE 802.16 entity (BS) transmits a PKM-RSP message to the IEEE 802.16 entity(SS). If the result is successful, a pre-Primary AK is included in it.
— IEEE 802.16 entity (SS) to NCMS(SS): The NCMS(SS) receives this message and the authentication result.

14.2.2.3 Security for handoffs (EAP only)

In the handover procedure, if an MS indicates to the serving BS that it is moving to a target BS, the serving BS may initiate a context transfer procedure to the target BS.

Figure 343 shows the context transfer primitives initiated by a serving BS between a BS and the NCMS entity.

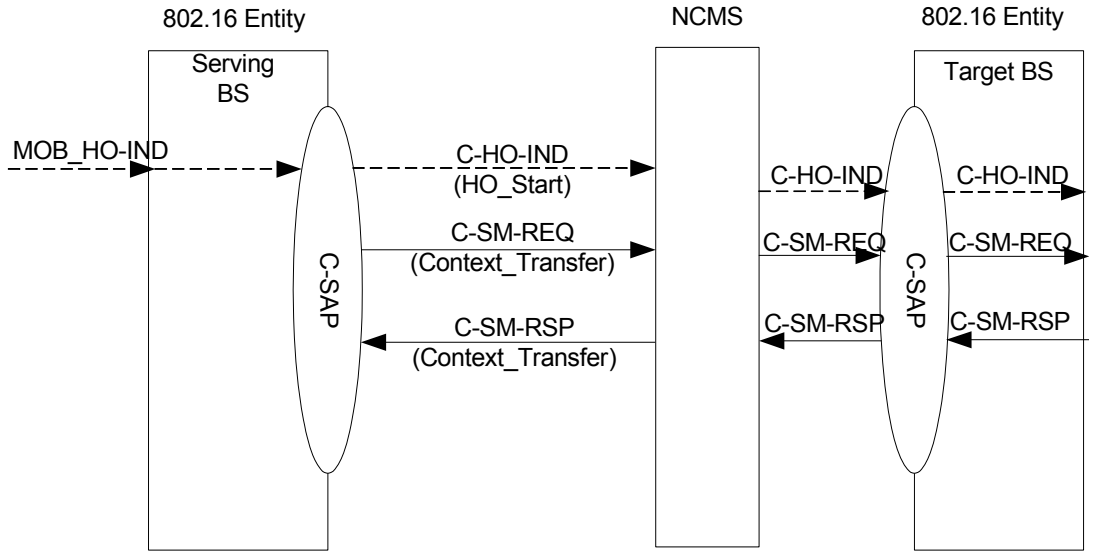

Figure 343—Context transfer primitives initiated by a serving BS

If an MS tries to process the network re-entry to a target BS, but the target BS has no MS information, then the target BS may request the MS information from the NCMS's Mobility Management Services or Security Services and the NCMS should respond. Figure 344 shows the context transfer procedure initiated by a target BS.

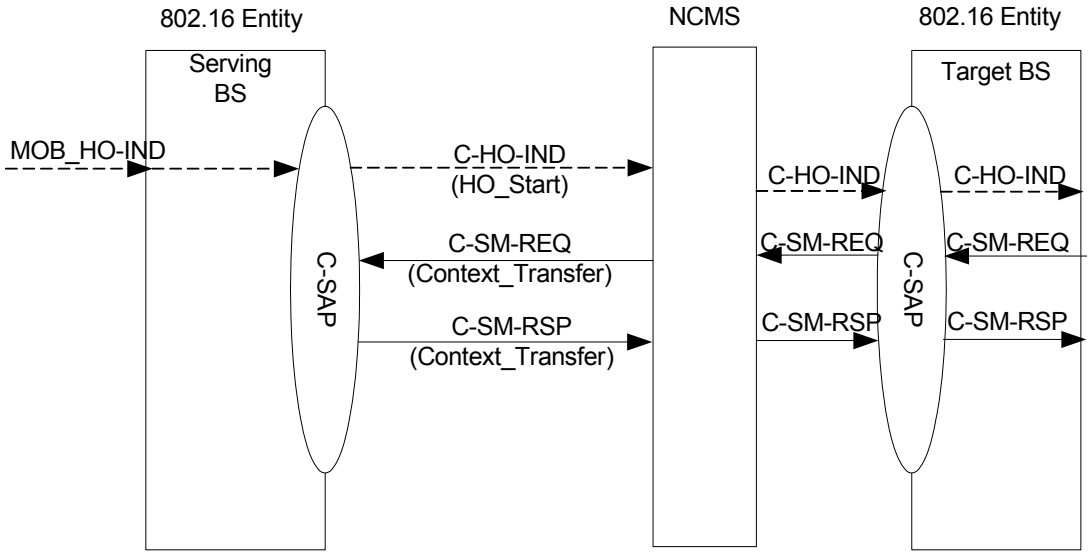

Figure 344—Context transfer primitives initiated by a target BS

14.2.2.3.1 Service primitives

14.2.2.3.1.1 C-SM-REQ

This primitive is used by an IEEE 802.16 entity or NCMS to indicate the transfer of the security context. The Action_Type included in this primitive defines the type of security operation handover procedure to be performed. The possible Action_Types for this primitive are listed in table below:

Action_Type	Description
Context Transfer	Context Transfer Indication

14.2.2.3.1.1.1 Function

This primitive is issued by the serving BS or the NCMS entity in order to give the target BS the required security context information of the MS. It is transmitted to the pruned down target BS after the handover procedure.

14.2.2.3.1.1.2 Semantics of the service primitives

The parameters of the primitives are as follows:

C-SM-REQ
(
Operation_Type: Action,
Action_Type: Context_Transfer,
Destination: NCMS or BS,
MS MAC Address,

Attribute_List:
Serving BSID,
Target BSID,
Security Information
)

MS MAC Address
48-bit unique identifier used for user identification between BS and NCMS
Serving BSID
Base station unique identifier of the serving BS (same as in the DL-MAP)
Target BSID
Base station unique identifier of the target BS (same as in the DL-MAP)
Security Information
The information negotiated during PKM procedure. It is present when the information could be provided. AK and AK sequence number transmitted by NCMS, TEK, TEK key lifetime, TEK sequence number, CBC Initialize Vector (the reuse of IV is TBD because of the security issue), SAID, GKEK, GKEK lifetime, GKEKKID, SA-type, SA service type, Cryptographic-Suite, and Authenticator ID

14.2.2.3.1.1.3 When generated

— IEEE 802.16 entity (BS) to NCMS: Context transfer initiated by a serving BS.
— NCMS to IEEE 802.16 entity (BS): Context transfer initiated by a target BS.

14.2.2.3.1.1.4 Effect of receipt

— IEEE 802.16 entity (BS) to NCMS: NCMS entity shall forward the MS information to the target BS or another NCMS entity using C-SM-RSP/Context Trans.
— NCMS to IEEE 802.16 entity (BS): BS responds with C-SM-RSP message.

14.2.2.3.1.2 C-SM-RSP

This primitive is used by an IEEE 802.16 entity or NCMS to respond to the C-SM-REQ. The Action_Type included in this primitive defines the type of security operation handover procedure to be performed. The possible Action_Types for this primitive are listed in table below:

Action_Type	Description
Context Transfer	Context Transfer Confirmation

14.2.2.3.1.2.1 Function

This primitive is issued by the target BS or the NCMS in order to respond to the C-SM-REQ/ Context_Transfer.

14.2.2.3.1.2.2 Semantics of the service primitives

The parameters of the primitives are as follows:

C-SM-RSP
(
Operation_Type: Action,

Action_Type: Context_Transfer,
Destination: NCMS or BS,
Attribute_List:
MS MAC Address
Serving BSID,
Target BSID,
Result Code,
Security Information
)

MS MAC Address
48-bit unique identifier used for user identification between BS and NCMS.
Serving BSID
Base station unique identifier of the serving BS (same as in the DL-MAP).
Target BSID
Base station unique identifier of the target BS (same as in the DL-MAP).
ResultCode
The result of context transfer procedure.
Security Information
The information negotiated during PKM procedure. It is present when the information could be provided. AK and AK sequence number transmitted by NCMS, TEK, TEK key lifetime, TEK sequence number, CBC Initialize Vector (the reuse of IV is TBD because of the security issue), SAID, GKEK, GKEK lifetime, GKEKKID, SA-type, SA service type, Cryptographic-Suite, and Authenticator ID.

14.2.2.3.1.2.3 When generated

— IEEE 802.16 entity (BS) to NCMS: BS sends this primitive when the C-SM-REQ/Context_Transfer is successfully processed.
— NCMS to IEEE 802.16 entity (BS): NCMS sends this primitive when the C-SM-REQ/ Context_Transfer is successfully processed.

14.2.2.3.1.2.4 Effect of receipt

— IEEE 802.16 entity (BS) to NCMS: BS informs the result of context transfer for the handover.
— NCMS to IEEE 802.16 entity (BS): NCMS informs the result of context transfer for the handover.

14.2.3 IP management with Secondary Management Connection

These primitives are provided when the IP connection is managed by the secondary management connection. It is available for both IPv4 and IPv6. IP management uses the Mobility Management Services in the NCMS.

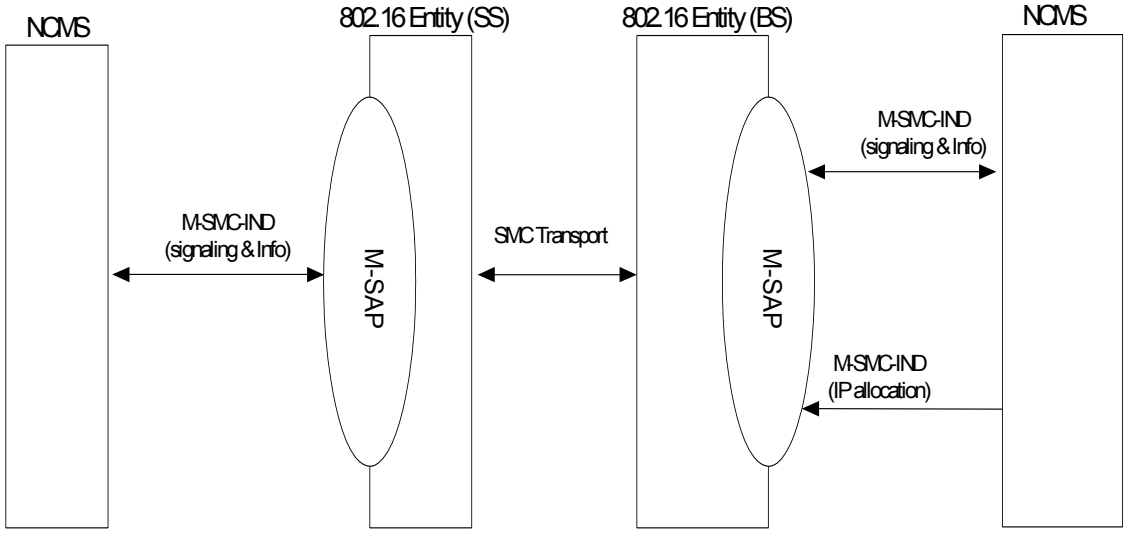

Figure 345—SMC IP address signaling transport and notification

14.2.3.1 M-SMC-IND

This primitive is used by an IEEE 802.16 entity or the NCMS to transfer payload information that may include IP address, signaling and information. It also can be used by the NCMS to notify the BS of an SS IP address status change and its new address. The Event_Type included in this primitive defines the information included in this primitive. The possible Event_Types for this primitive are listed in the table below:

Event_Type	Description
SMC-PAYLOAD	Forward SMC payload.
IP_ALLOCATION	NCMS notify the BS of an SS' IP address status change

14.2.3.1.1 M-SMC-IND (Event_Type = SMC-PAYLOAD)

14.2.3.1.1.1 Function

SMC payload is sent from NCMS to IEEE 802.16 entity.

14.2.3.1.1.2 Semantics of the service primitives

The parameters of the primitives are as follows:

M-SMC-IND
(
Event_Type: SMC-PAYLOAD,
Destination: SS, BS, or NCMS,
Attribute_list:

SS MAC Address,
SMC Payload
)

SS MAC Address
48-bit unique identifier used for the IEEE 802.16 entity identification.
SMC Payload
Contains the SMC payload

14.2.3.1.1.3 When generated

— IEEE 802.16 entity to NCMS: This primitive is generated when the IEEE 802.16 entity sends to the NCMS traffic received over the secondary management connection.
— NCMS to IEEE 802.16 entity: This primitive is used when the NCMS wants to send SMC traffic over the air.

14.2.3.1.1.4 Effect of receipt

— IEEE 802.16 entity to NCMS: On receipt of this primitive from the M-SAP, the NCMS examines the payload. If it contains IP address signaling, the NCMS will engage the proper signaling agent (DHCP or MIP).
— NCMS to IEEE 802.16 entity: On receipt of this primitive the IEEE 802.16 entity transfers the SMC payload over the air.

14.2.3.1.2 M-SMC-IND(Event_Type = IP_ALLOCATION)

14.2.3.1.2.1 Function

When the IP address for an SS is changed, the NCMS in the BS may notify the BS of the new status of the IP SS address. If the status value is NEW, the NCMS sends the new allocated IP address. This primitive is only sent from the NCMS to the BS.

14.2.3.1.2.2 Semantics of the service primitives

The parameters of the primitives are as follows:

M-SMC-IND
(
Event_Type: IP_ALLOCATION,
Destination: BS,
Attribute_list:
SS MAC Address,
Status,
IP Address
)

SS MAC Address
48-bit unique identifier used for user identification between BS and NCMS.
Status
The status of the IP address of an SS. The value may be NEW, REMAIN, RELEASE.
IP Address
If the Status value is NEW, this parameter should be the new allocated address of the SS.

14.2.3.1.2.3 When generated

This primitive is issued by the NCMS when the IP address of the SS has changed.

14.2.3.1.2.4 Effect of receipt

The BS learns about the status and the new IP address of the SS.

14.2.4 Subscriber mode management

14.2.4.1 Managing device states

In Normal Operation, an MS transmits and receives packets to/from a BS. Currently, three subscriber modes are defined, i.e., Normal, Sleep and Idle Modes. Sleep Mode is intended to minimize an MS power usage and decrease usage of serving BS air interface resources by pre-negotiated periods of absence from the serving BS air interface. Idle Mode allows an MS to become periodically available for DL broadcast traffic without registration at a specific BS as the MS traverses an air link environment populated by multiple BSs, and thus, allows the MS to conserve power and operational resources.

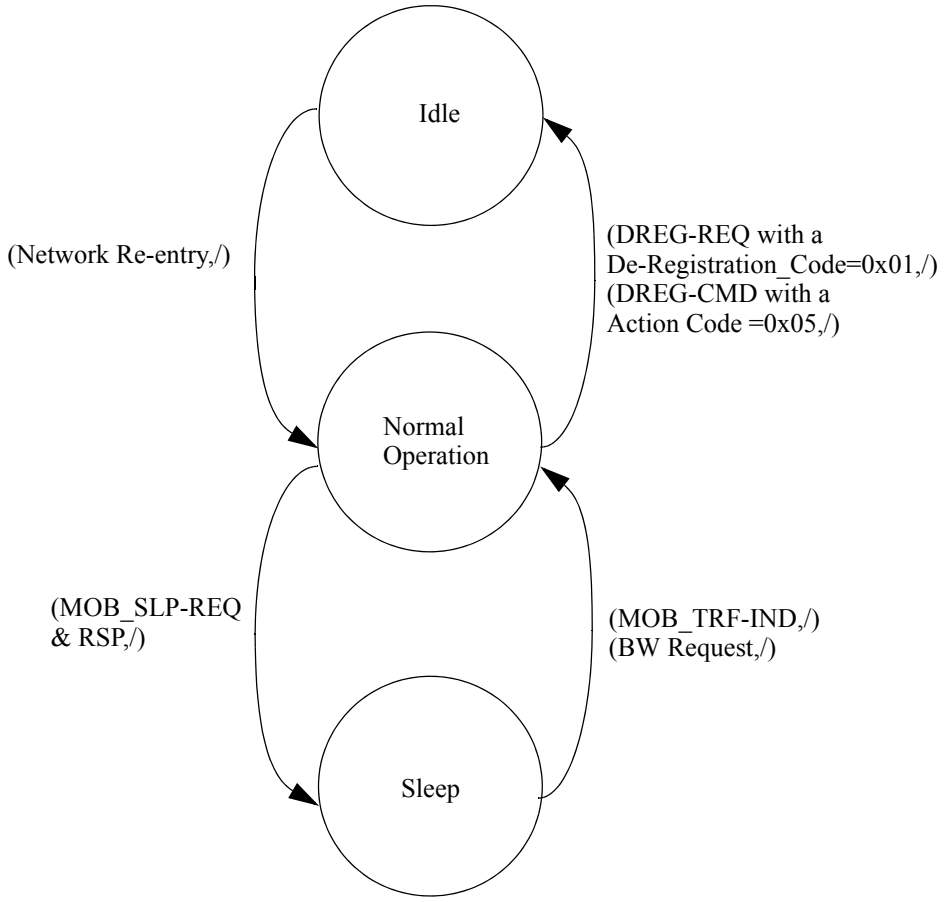

Figure 346—Subscriber mode transition diagram at MS and BS

Sleep Mode operation is defined between an MS and a BS only, and the NCMS does not need to manage the subscriber's Sleep Mode. Thus, both an MS and a BS manage the Normal Operation, Sleep Mode, and Idle Mode of the subscriber. On the other hand, the Paging and Idle Mode Management Services in the NCMS

manages Idle Mode operation, and the transition from Normal Operation and Idle Mode. Subscriber Mode transitions at an MS, BS and the NCMS are illustrated in Figure 346 and Figure 347.

The parenthesis in Figure 346 and Figure 347 consists of condition and action for state transition, (*condition, action*). For example, (C-IMM-REQ, C-IMM-ACK) means that if an NCMS receives C-IMM-REQ, it sends C-IMM-ACK. If there is no output primitive action, "/" is used. For example, (C-IMM-RSP, /) means that if the NCMS receives C-IMM-RSP, it does not perform any action.

Figure 346 shows Subscriber Mode transition diagram at both an MS and a BS. Subscriber Mode at both an MS and a BS changes from Normal Operation to Idle Mode when the MS issues an MS De-registration Request (DREG-REQ) message with De-Registration_Request_Code=0x01 or the BS issues an De-register Command (DREG-CMD) message with Action Code = 0x05. Then, the MS stays at Idle Mode and updates its location when the paging group changes. The Subscriber Mode returns back to Normal Operation from Idle Mode after completing Network re-entry. Transition from Normal Operation to Sleep Mode is performed after an MS successfully exchanges Sleep Request (MOB_SLP-REQ) and Sleep Response (MOB_SLP-RSP) messages with a BS. If there is any DL traffic toward an MS from a BS, MOB_TRF-IND is broadcast to the MS from the BS and the Subscriber Mode of the MS and the BS changes from Sleep Mode to Normal Operation. If there is any UL traffic from an MS, Bandwidth Request (BW Request) is sent to the serving BS from the MS and the Subscriber Mode of the MS and the BS changes from Sleep Mode to Normal Operation, too.

Figure 347 shows Subscriber Mode transition diagram at the NCMS with service primitives related with the Subscriber Mode transition. Subscriber Mode transition from Normal Operation to Idle Mode is performed by exchanging C-IMM-REQ and C-IMM-RSP between an IEEE 802.16 entity and the NCMS after successful DREG-REQ message from the MS with De-Registration_Request_Code=0x01 or DREG-CMD message from the BS with Action Code = 0x05, where C-IMM-REQ and C-IMM-RSP are defined in 14.2.4.2.1 and 14.2.4.2.2, respectively. Subscriber Mode transition from Idle Mode to Normal Operation is initiated after exchanging C-IMM-RSP and C-IMM-ACK between an IEEE 802.16 entity and the NCMS, where C-IMM-RSP and C-IMM-ACK are defined in 14.2.4.2.2 and 14.2.4.2.3, respectively.

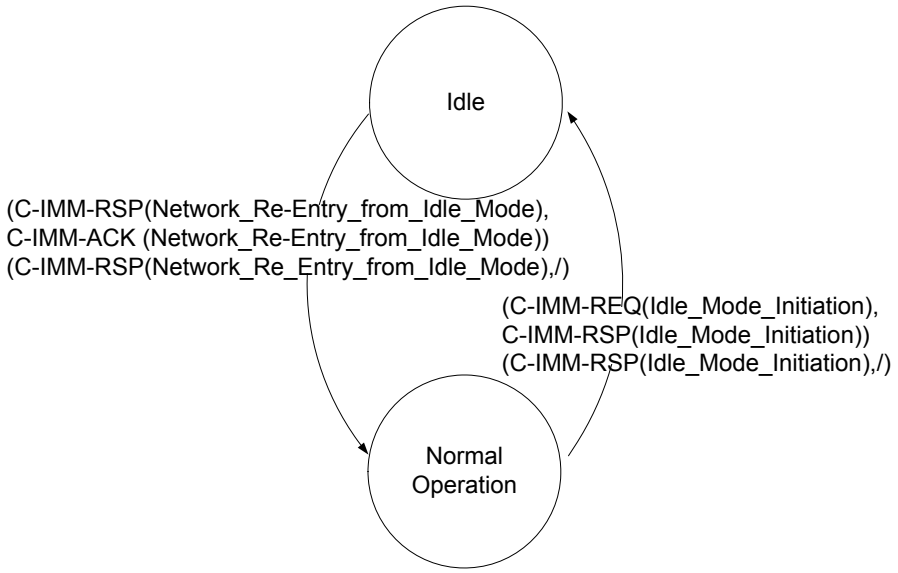

Figure 347—Subscriber mode transition diagram at NCMS (on BS and MS side)

14.2.4.2 Idle mode management primitives

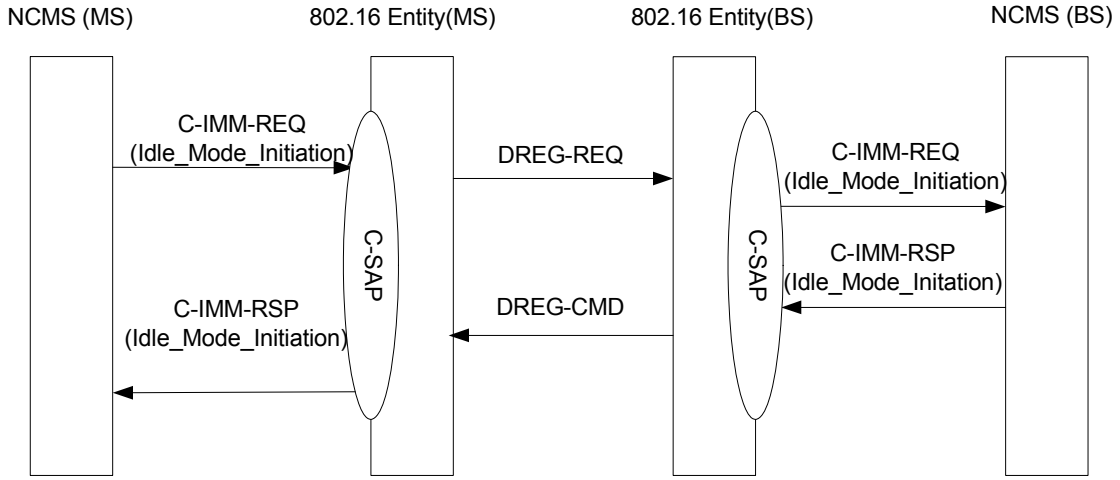

Figure 348—Idle mode initiation (by NCMS on the MS side)

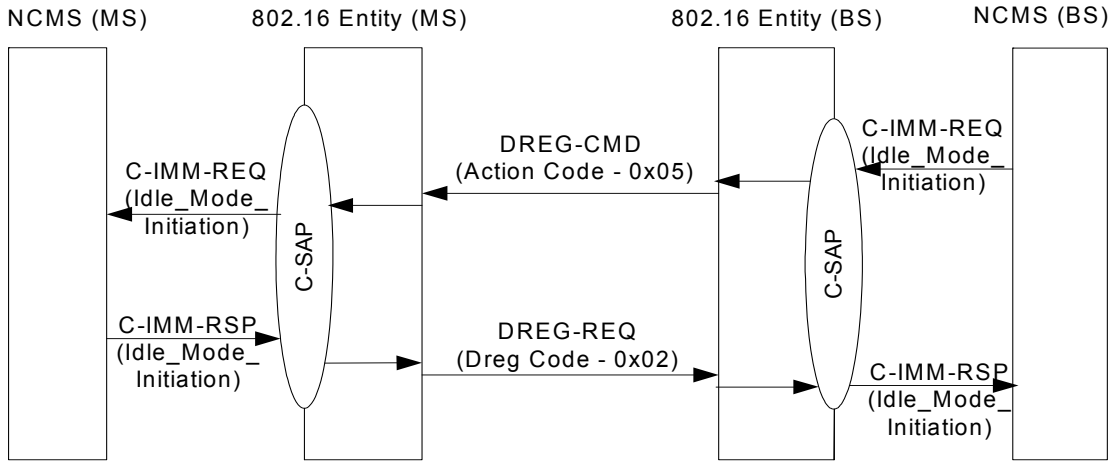

Figure 349—Idle mode initiation (initiated by the NCMS on the BS side)

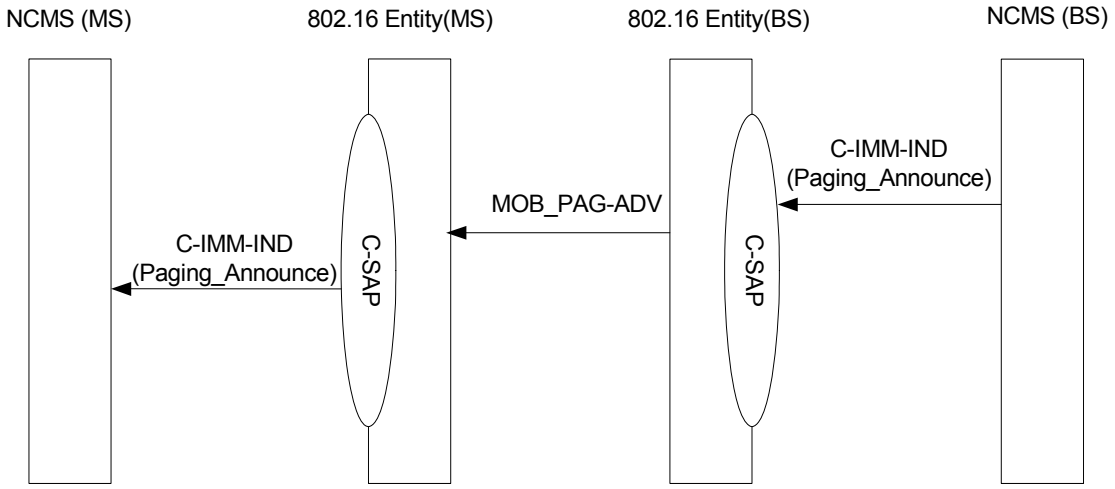

Figure 350—Paging Announce

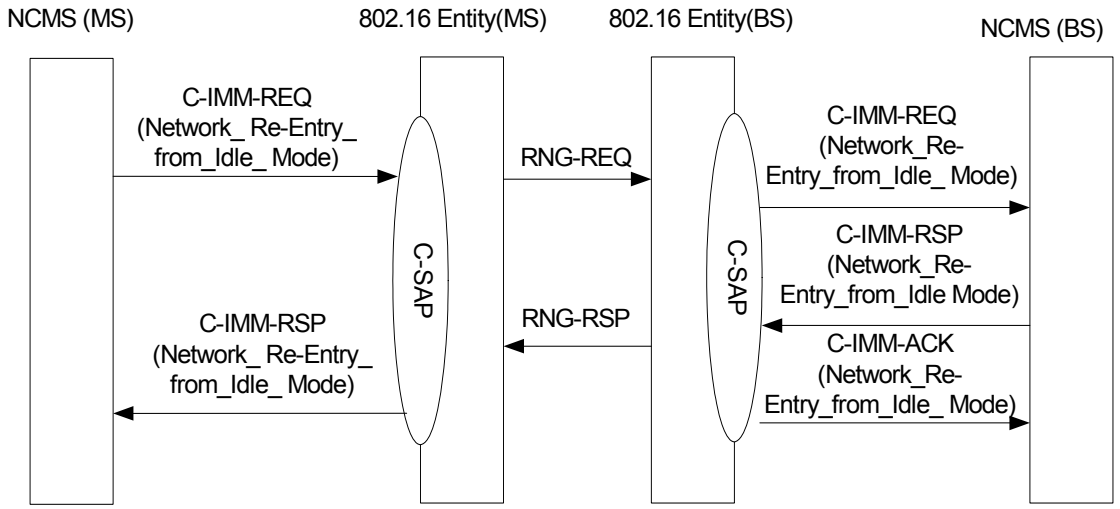

Figure 351—Network re-entry from idle mode primitives

14.2.4.2.1 C-IMM-REQ

This primitive is used by an IEEE 802.16 entity or NCMS to trigger an idle mode management procedure. The Action Type included in this primitive defines the type of idle mode management procedure to be performed. The possible Action_Types for this primitive are listed in the table below:

Action_Type	Description
Idle_Mode_Initiation	Idle Mode Initiation Request
Network_Re-Entry_from_Idle_Mode	Network Re-Entry from Idle Mode Request

14.2.4.2.1.1 C-IMM-REQ (Action_Type = Idle_Mode_Initiation)

14.2.4.2.1.1.1 Function

This primitive is issued by an NCMS (MS or BS) to initiate idle mode.

14.2.4.2.1.1.2 Semantics of the service primitive

The parameters of the primitive are as follows:

C-IMM-REQ
(
Operation_Type: Action,
Action_Type: Idle_Mode_Initiation,
Destination: NCMS, BS, MS,
Attribute_List:
MS MAC Address,
Paging_Information,
Paging Controller ID,
Security Information,
Idle Mode Retain Information,
MAC Hash Skip Threshold,
Service Flow parameters,
Service and operational information
)

MS MAC Address
48-bit MAC Address that identifies MS during Idle Mode

Paging_Information
Paging Group ID, Paging Cycle, Paging Offset

Paging Controller ID
A logical network identifier for the serving BS or other network entity retaining MS service and operational information and/or administrating paging activity for the MS while in Idle Mode. The Paging Controller ID shall be set to the BSID when a BS is acting as the Paging Controller.

Security Information
AK Context, security association info, authenticator ID, etc.

Idle Mode Retain Information
MS request for Paging Controller retention of MS service and operational information to expedite future Network Re-entry from Idle Mode. (See 6.3.2.3.42.)

MAC Hash Skip Threshold

Maximum number of successive MOB_PAG-ADV messages that may be sent from a BS individual notification for an MS, including MS MAC Address Hash of an MS for which Action Code is 0b00, 'No Action Required.'

Service Flow parameters

Parameters for the existing Service Flow without actually activating it to carry traffic at MS Idle Mode Initiation, e.g., Paging Preference.

Service and operational information

MS service and operational information associated with MAC state machines, CS classifier information, etc.

14.2.4.2.1.1.3 When generated

— NCMS(MS) to IEEE 802.16 entity (MS): This primitive is generated by an NCMS(MS) when the NCMS(MS) decides on idle mode initiation.

— IEEE 802.16 entity (BS) to NCMS(BS): This primitive is generated by an IEEE 802.16 entity (BS) when the IEEE 802.16 entity (BS) receives MAC messages for initiation of idle mode (DREG-REQ with Deregistration_Request_Code=0x01, "request for MS De-Registration from serving BS and initiation of MS Idle Mode")

— NCMS(BS) to IEEE 802.16 entity (BS): This primitive is generated by an NCMS(BS) when the NCMS(BS) decides on idle mode initiation.

— IEEE 802.16 entity (MS) to NCMS(MS): This primitive is generated by an IEEE 802.16 entity (MS) when the IEEE 802.16 entity (MS) receives MAC messages for initiation of idle mode (DREG-CMD with Action Code = 0x05).

14.2.4.2.1.1.4 Effect of receipt

— NCMS(MS) to IEEE 802.16 entity (MS): When the IEEE 802.16 entity (MS) receives the C-IMM-REQ, the MS shall transmit DREG-REQ with Deregistration_Request_Code=0x01.

— IEEE 802.16 entity (BS) to NCMS(BS): The NCMS shall respond to this primitive with C-IMM-RSP(Idle_Mode_Initiation) and performs idle mode initiation procedure.

— NCMS(BS) to IEEE 802.16 entity (BS): When the IEEE 802.16 entity (BS) receives the C-IMM-REQ, the BS shall transmits DREG-CMD with Action Code = 0x05.

— IEEE 802.16 entity (MS) to NCMS(MS): The NCMS responds to this primitive with C-IMM-RSP(Idle_Mode_Initiation) and performs idle mode initiation procedure.

14.2.4.2.1.2 C-IMM-REQ (Action_Type = Network_Re-Entry_from_Idle_Mode)

14.2.4.2.1.2.1 Function

This primitive is issued by an NCMS of an MS to inform the IEEE 802.16 entity of the MS that the MS is attempting to re-enter the network. This primitive is also issued by a BS to inform the Paging and Idle Mode Services entity in the NCMS(BS) that the specified MS is attempting to re-enter network in response to paging.

14.2.4.2.1.2.2 Semantics of the service primitive

The parameters of the primitive are as follows:

C-IMM-REQ

(
Operation_Type: Action,
Action_Type: Network_Re-Entry_from_Idle_Mode,

Destination: MS, NCMS,
Attribute_List:
MS MAC Address,
Paging Information,
Paging Controller ID,
BSID
)

MS MAC Address
48-bit MAC Address that identifies MS during Idle Mode

Paging Information
Paging Group ID, Paging Cycle, and Paging Offset parameters used by MS in Idle Mode.

Paging Controller ID
A logical network identifier for the serving BS or other network entity retaining MS service and operational information and/or administrating paging activity for the MS while in Idle Mode. The Paging Controller ID shall be set to the BSID when a BS is acting as the Paging Controller.

BSID
A network identifier of the BS at which the MS is attempting to re-enter network

14.2.4.2.1.2.3 When generated

— NCMS(MS) to IEEE 802.16 entity (MS): This primitive is generated by an NCMS(MS) when the NCMS(MS) performs network re-entry.

— IEEE 802.16 entity (BS) to NCMS(BS): This primitive is generated by an IEEE 802.16 entity (BS) when it receives a RNG-REQ message including Ranging Purpose Indication with setting bit 0 to 1 in combination with Paging Controller ID.

14.2.4.2.1.2.4 Effect of receipt

— NCMS(MS) to IEEE 802.16 entity (MS): If an IEEE 802.16 entity (MS) receives C-IMM-REQ(Network_Re-Entry_from_Idle_Mode), it shall generate a RNG-REQ to a BS.

— IEEE 802.16 entity (BS) to NCMS(BS): If an NCMS(BS) receives C-IMM-REQ(Network Re-Entry_from_Idle_Mode), it shall respond to the request with the C-IMM-RSP (Network_Re-Entry_from_Idle_Mode) primitive.

14.2.4.2.2 C-IMM-RSP

The possible Action_Types for this primitive are listed in the table below:

Action_Type	Description
Idle_Mode_Initiation	Idle Mode Initiation Response
Network_Re-Entry_from_Idle_Mode	Idle Re-Entry Response

14.2.4.2.2.1 C-IMM-RSP (Action_Type = Idle_Mode_Initiation)

14.2.4.2.2.1.1 Function

This primitive is issued by the Paging and Idle Mode Management entity in the NCMS in response to the C-IMM-REQ(Idle_Mode_Initiation) primitive.

14.2.4.2.2.1.2 Semantics of the service primitive

The parameters of the primitive are as follows:

C-IMM-RSP
(
Operation_Type: Action,
Action_Type: Idle_Mode_Initiation,
Destination: NCMS, BS, MS,
Attribute_List:
Action code,
MS MAC Address,
Paging Information,
Paging Controller ID,
Idle Mode Retain Information,
MAC Hash Skip Threshold,
REQ-duration
)

Action code
Indicates the value of Action code to be included in DREQ-CMD message. (See Table 55.)
MS MAC Address
48-bit MAC Address that identifies MS during Idle Mode
Paging Information
Paging Group ID, Paging Cycle, and Paging Offset parameters followed by MS in Idle Mode.
Paging Controller ID
A logical network identifier for the serving BS or other network entity retaining MS service and operational information and/or administrating paging activity for the MS while in Idle Mode. The Paging Controller ID shall be set to the BSID when a BS is acting as the Paging Controller.
Idle Mode Retain Information
MS request for Paging Controller retention of MS service and operational information to expedite future Network Re-entry from Idle Mode. (See 6.3.2.3.42.)
MAC Hash Skip Threshold
Maximum number of successive MOB_PAG-ADV messages that may be sent from a BS individual notification for an MS, including MS MAC Address Hash of an MS for which Action Code is 0b00, 'No Action Required'.
REQ-duration
Waiting value for the DREG-REQ message re-transmission (measured in frames).

14.2.4.2.2.1.3 When generated

— NCMS(BS) to IEEE 802.16 entity (BS): This primitive is generated by the NCMS(BS) to request a IEEE 802.16 entity (BS) to issue a DREG-CMD message after receiving C-IMM-REQ(Idle_Mode_Initiation).
— IEEE 802.16 entity (MS) to NCMS(MS): This primitive is generated by an IEEE 802.16 entity (MS) to inform about the result of idle mode initiation.

— NCMS(MS) to IEEE 802.16 entity (MS): This primitive is generated by the NCMS(MS) to request a IEEE 802.16 entity (MS) to issue a DREG-REQ message after receiving C-IMM-REQ(Idle_Mode_Initiation).
— IEEE 802.16 entity (BS) to NCMS(BS): This primitive is generated by an IEEE 802.16 entity (BS) to inform result of idle mode initiation.

14.2.4.2.2.1.4 Effect of receipt

— NCMS(BS) to IEEE 802.16 entity (BS): When the IEEE 802.16 entity(BS) receives C-IMM-RSP(Idle_Mode_Initiation), the BS transmits DREG-CMD message with setting each field in accordance with the information elements in this primitive.
— IEEE 802.16 entity (MS) to NCMS(MS): The NCMS(MS) completes idle mode initiation.
— NCMS(MS) to IEEE 802.16 entity (MS): When the IEEE 802.16 entity(MS) receives C-IMM-RSP(Idle_Mode_Initiation), the MS transmits DREG-REQ message with setting each field in accordance with the information elements in this primitive.
— IEEE 802.16 entity (BS) to NCMS(BS): The NCMS(MS) completes idle mode initiation.

14.2.4.2.2.2 C-IMM-RSP (Action_Type = Network_Re-Entry_from_Idle_Mode)

14.2.4.2.2.2.1 Function

This primitive is issued by the Paging and Idle Mode Management entity to confirm the MS Network Re-entry from Idle Mode and provide the BS, at which the MS is attempting to re-enter the network, with service and operational information.

14.2.4.2.2.2.2 Semantics of the service primitive

The parameters of the primitive are as follows:

C-IMM-RSP
(
Operation_Type: Action,
Action_Type: Network_Re-Entry_from_Idle_Mode,
Destination: BS, NCMS,
Attribute_List:
MS MAC Address,
Security Information,
Service and operational information,
)

MS MAC Address
48-bit MAC Address that identifies MS during Idle Mode
Security Information
AK Context, Security Association Info, Authenticator ID, etc.
Service and operational information
MS service and operational information associated with MAC state machines, CS classifier information, etc.

14.2.4.2.2.2.3 When generated

— NCMS(BS) to IEEE 802.16 entity (BS): This primitive is generated by the NCMS(BS) to respond to C-IMM-REQ(Network_Re-Entry_from_Idle_Mode).

— IEEE 802.16 entity (MS) to NCMS(MS): This primitive is generated by an IEEE 802.16 entity(MS) to inform about the result of network re-entry.

14.2.4.2.2.2.4 Effect of receipt

— NCMS(BS) to IEEE 802.16 entity (BS): When the IEEE 802.16 entity(BS) receives C-IMM-RSP(Network_Re-Entry_from_Idle_Mode), the BS shall transmit RNG-RSP message with setting each field in accordance with the information elements in this primitive. The BS acknowledges the receipt of this message by transmitting the C-IMM-ACK(Network_Re-Entry_from_Idle_Mode) message to the NCMS.

— IEEE 802.16 entity (MS) to NCMS(MS): The NCMS(MS) completes network re-entry.

14.2.4.2.3 C-IMM-ACK

The possible Action_Types for this primitive are listed in the table below:

Action_Type	Description
Network_Re-Entry_from_idle_Mode	Network Re-Entry from Idle Mode

14.2.4.2.3.1 Function

This primitive is issued by a BS to inform the Paging and Idle Mode Management entity that an MS has re-entered network successfully.

14.2.4.2.3.2 Semantics of the service primitive

The parameters of the primitives are as follows:

C-IMM-ACK
(
Operation_Type: Action,
Action_Type: Network_Re-Entry_from_idle_Mode,
Destination: NCMS,
Attribute_List:
MS MAC Address,
Paging Controller ID,
BSID
)

MS MAC Address
48-bit MAC Address that identifies MS during Idle Mode.

Paging Controller ID
A logical network identifier for the serving BS or other network entity retaining MS service and operational information and/or administrating paging activity for the MS while in Idle Mode. The Paging Controller ID shall be set to the BSID when a BS is acting as the Paging Controller.

BSID
A network identifier of the BS at which the MS is attempting to re-enter network.

14.2.4.2.3.3 When generated

This primitive is generated by a BS when Network Re-entry process specified in 6.3.22.10 has been completed.

14.2.4.2.3.4 Effect of receipt

The buffered DL traffic is delivered to the serving BS and finally to MS.

14.2.4.2.4 C-IMM-IND

The possible Event_Types for this primitive are listed in the table below:

Event_Type	Description
Paging Announce	Paging Announce

14.2.4.2.4.1 Function

This primitive is issued by the Paging and Idle Mode Management entity in the NCMS to notify a BS to page an idle MS by transmitting a MOB_PAG-ADV message including the MS MAC Address Hash and relevant Action Code.

14.2.4.2.4.2 Semantics of the service primitive

The parameters of the primitives are as follows:

C-IMM-IND
(
Event_Type: Paging Announce,
Destination: BS, NCMS,
Attribute_List:
MS MAC Address,
Paging Information,
Action Code
)

MS MAC Address
48-bit MAC Address that identifies MS during Idle Mode
Paging Information
Paging Group ID, Paging Cycle, and Paging Offset parameters followed by MS in Idle Mode.
Action Code
Action required for MS in Idle Mode (e.g., Network Re-entry, ranging for location update, and so on)

14.2.4.2.4.3 When generated

— NCMS(BS) to IEEE 802.16 entity (BS): This primitive is generated by the Paging and Idle Mode Management entity to request a BS to transmit BS Broadcast Paging message.
— IEEE 802.16 entity (MS) to NCMS(MS): This primitive is generated by the IEEE 802.16 entity (MS) to inform about a paging announce.

14.2.4.2.4.4 Effect of receipt

— NCMS(BS) to IEEE 802.16 entity (BS): A BS receiving C-IMM-IND (Paging_Announce) shall transmit MOB_PAG-ADV message following the information provided by this primitive.

— IEEE 802.16 entity (MS) to NCMS(MS): The NCMS(MS) shall perform C-IMM-IND(Paging Announce).

14.2.4.3 Location update procedure

Location management of an MS is performed by mobility management service of the NCMS. An MS in idle mode performs Location Update in order to inform the NCMS of its current location information, i.e., paging group. This information is used to page the MS through the cells that belong to the paging group of the called MS when there is pending DL traffic toward the MS.

Location Update is performed if any of the Location Update conditions are met. There are currently four Location Update conditions defined: Zone Update, Timer Update, Power Down Update, and MAC Hash Skip Threshold Update. In Zone Update, the MS shall perform Location Update process when the MS detects a change in paging group by comparing the Paging Group identifier (PG_ID) stored in the MS with that of transmitted by the preferred BS in the DCD message or MOB_PAG-ADV broadcasting message. In Timer Update, MS shall periodically perform Location Update process prior to the expiration of the idle mode timer. In Power Down Update, the MS shall attempt to complete a Location Update once as part of its orderly power down procedure. In MAC Hash Skip Threshold update, the MS shall perform Location Update process when the MS MAC hash skip counter exceeds the MAC hash skip threshold.

All the above Location Updates are realized by Ranging request/response (RNG-REQ/RSP) message between an MS and a BS, and the C-IMM-REQ, C-IMM-RSP, C-IMM-IND service primitives are defined between an IEEE 802.16 entity and the NCMS to perform Location Update.

Figure 352 shows service primitives for Location Update between an IEEE 802.16 entity and the NCMS.

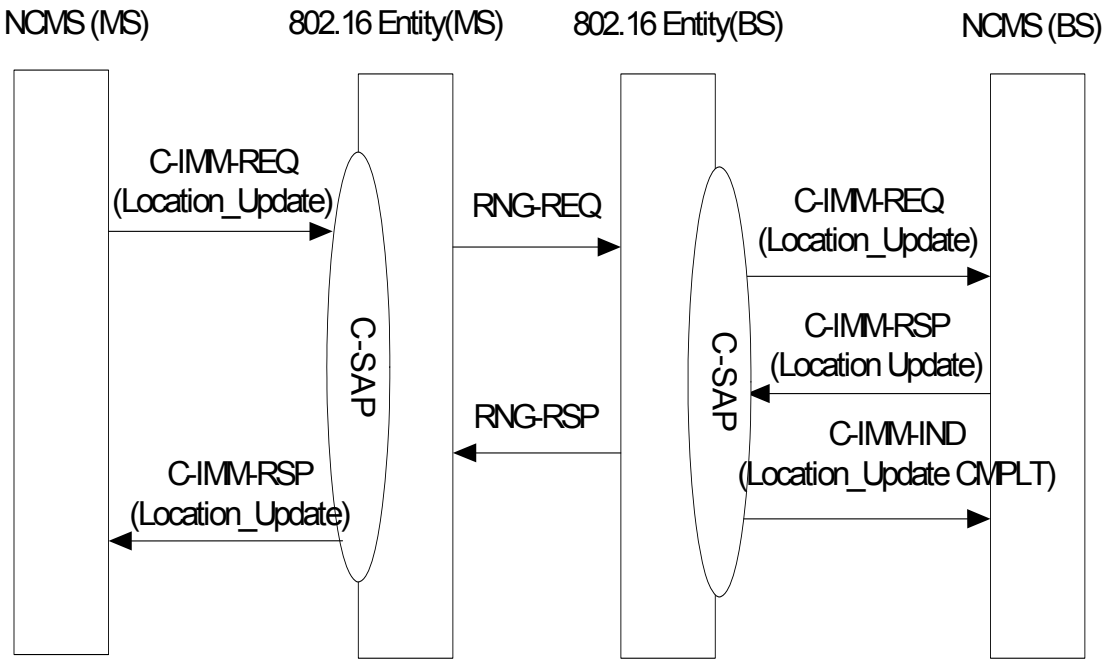

Figure 352— Location Update Primitives

14.2.4.3.1 C-IMM-REQ

The possible Action_Types for this primitive are listed in the table below:

Action_Type	Description
Location Update	Location Update request

14.2.4.3.1.1 Function

This primitive is issued by a BS to inform the Mobility Management entity in the NCMS that an MS requests to initiate a Location Update procedure. This primitive is also used by an NCMS(MS) to trigger a location update procedure.

14.2.4.3.1.2 Semantics of the service primitive

The parameters of the primitives are as follows:

C-IMM-REQ
(
Operation_Type: Action,
Action_Type: Location Update,
Destination: MS, NCMS,
Attribute_List:
MS MAC Address,
BSID,

Paging Controller ID,
Paging Group ID,
MAC Hash Skip Threshold,
Power Down Indicator,
Security Context Indication
)

MS MAC Address
48-bit MAC address that identifies MS
BSID
Identifier of serving BS
Paging Controller ID
The Paging Controller ID is a logical network identifier for the serving BS or other network entity retaining MS service and operational information and/or administering paging activity for the MS while in Idle Mode.
Paging Group ID
One or more logical affiliation groupings of BS
MAC Hash Skip Threshold
Maximum number of successive MOB_PAG-ADV messages that may be sent from a BS without individual notification for an MS, including MAC address hash of an MS for which Action Code is 00, 'No Action Required'.
Power Down Indicator
Indicates the MS is currently attempting to perform Location Update due to power down.
Security Context Indication
Indicates whether the BS has the required security context information for secure location update.
0x00= no security information available
0x01= security information present

14.2.4.3.1.3 When generated

— NCMS(MS) to IEEE 802.16 entity (MS): This primitive is generated by an NCMS(MS) that wants to request location update by location update condition.
— IEEE 802.16 entity (BS) to NCMS(BS): This primitive is generated when an IEEE 802.16 entity(BS) receives RNG-REQ message with Paging Controller ID and Ranging Purpose Indication with bit 1 set to 1, MAC Hash Skip Threshold, Power Down Indicator, and Security Context Indication.

14.2.4.3.1.4 Effect of receipt

— NCMS(MS) to IEEE 802.16 entity (MS): Upon receiving this primitive, the IEEE 802.16 entity(MS) shall generate RNG-REQ message with the appropriate parameters setting.
— IEEE 802.16 entity (BS) to NCMS(BS): Upon receiving this primitive, the NCMS(BS) that is a management entity of Mobility Management Services shall respond with location update response.

14.2.4.3.2 C-IMM-RSP

The possible Action_Types for this primitive are listed in the table below:

Action_Type	Description
Location Update	Location Update response

14.2.4.3.2.1 Function

This primitive is issued by the NCMS(BS) to respond to Location Update request from the IEEE 802.16 entity. This primitive is also used by IEEE 802.16 entity (MS) to notify the NCMS(MS) that the location update procedure has been completed.

14.2.4.3.2.2 Semantics of the service primitive

The parameters of the primitives are as follows:

C-IMM-RSP
(
Operation_Type: Action,
Action_Type: Location Update,
Destination: BS, NCMS,
Attribute_List:
MS MAC Address,
Location Update Result,
Paging Information,
Paging Controller ID,
MAC Hash Skip Threshold,
Power Down Response,
Security Information
)

MS MAC Address
48-bit MAC address that identifies MS

Location Update Result
Response to Location Update Request:
0b00=Failure. The MS shall perform Network Re-entry from Idle Mode;
0b01=Successful assignment of Paging Controller and Paging Information.
0b10, 0b11: Reserved

Paging Information
New Paging Information assigned to MS. Paging Information shall only be included if Location Update Response=0x01 and if Paging Information has changed. The Paging Information TLV defines the Paging Group ID, PAGING_CYCLE and PAGING OFFSET parameters to be used by the MS in IDLE mode. PAGING_CYCLE is the cycle in which the paging message is transmitted within the paging group. PAGING OFFSET determines the frame within the cycle in which the paging message is transmitted and it shall be smaller than PAGING CYCLE value. Paging Group ID specifies the paging group the MS is assigned to.

Paging Controller ID
Paging Controller ID is a logical network identifier for the serving BS or other network entity retaining MS service and operational information and/or administering paging activity for the MS while in Idle Mode. Paging Controller ID shall only be included if Location Update Response=0x01 and if Paging Controller ID has changed.

MAC Hash Skip Threshold
Maximum number of successive MOB_PAG-ADV messages that may be sent from a BS without individual notification for an MS, including MAC address hash of an MS for which Action Code for the MS is 00, 'No Action Required.' If BS does not include this TLV item in the RNG-RSP message, any BS may omit MAC Address Hash of the MS with Action Code 00, 'No Action Required' from any MOB_PAG-ADV message.

Power Down Response
Indicates the MS's Power Down Location Update result.
0x00= Failure of Power Down Information Update.

0x01= Success of Power Down Information Update.

Security Information

The information that can be used by BS to implement authentication procedure. This information is optional and it is only included when Security Context Indication = 0x00 in C-IMM-REQ. (The BS does not have required security context information and needs to obtain it from the NCMS for secure location update.)

14.2.4.3.2.3 When generated

— NCMS(BS) to IEEE 802.16 entity (BS): This primitive is generated by the NCMS(BS) in order to request an IEEE 802.16 entity (BS) to issue a RNG-RSP message.

— IEEE 802.16 entity (MS) to NCMS(MS): This primitive is generated by an IEEE 802.16 entity(MS) to notify result of location response.

14.2.4.3.2.4 Effect of receipt

— NCMS(BS) to IEEE 802.16 entity (BS): The IEEE 802.16 entity (BS) receiving C-IMM-RSP(Location Update) shall transmit RNG-RSP message with the appropriate parameters settings.

— IEEE 802.16 entity (MS) to NCMS(MS): The NCMS(MS) receiving C-IMM-RSP(Location Update) shall complete the location update procedures.

14.2.4.3.3 C-IMM-IND

The possible Event Types for this primitive are listed in the table below:

Event_Type	Description
Location_Update_CMPLT	Notify the NCMS the location update procedure is completed

14.2.4.3.3.1 Function

This primitive is used by BS to notify that the location update procedure has been completed.

14.2.4.3.3.2 Semantics of the service primitive

The parameters of the primitives are as follows:

C-IMM-IND

```
(
Event_Type: Location_Update_CMPLT,
Destination: NCMS,
Attribute_List:
    MS MAC Address,
    BSID,
    Location Update Result
)
```

MS MAC Address

48-bit MAC address that identifies MS

BSID

Identifier of serving BS

Location Update Result

Notify the result of authentication interaction between BS and NCMS:
0x00=Failure of Idle Mode Location Update. The MS shall perform Network Re-entry from Idle Mode
0x01=Success of Idle Mode Location Update
others: Reserved

14.2.4.3.3.3 When generated

This primitive is generated at a BS when it received C-IMM-RSP and finished the Location Update procedure. This primitive is in order to notify NCMS that the location update procedure has been completed.

14.2.4.3.3.4 Effect of receipt

The NCMS receives this message and get the information that the location update has been completed.

14.2.5 Handover management

14.2.5.1 Handover context for connections

Handover context for connections is the set of information that is shared between the serving BS and the target BS for re-establishment of the transport connections during HO. HO context consists of the following information:

General MS Information
It is the information required to identify the MS. IP address and MAC address of the MS can be included in this information.
MS Capability Information
It is the information about MS capabilities that need to be negotiated with the serving BS at the initial network entry.
Security Information
It is the information negotiated during PKM procedure. If the MS and the target BS can derive the AK for them without the help of the serving BS, AK key may be excluded from this information.
Service Flow Information
It is the information negotiated during DSx-related procedure.
MAC state Information
It is the information used to maintain MAC state machine and to manage MAC PDU transmission.

For the re-establishment of connections at the Target BS during HO, the Serving BS shall provide the Target BS with the HO context through the Mobility Management Services entity in the NCMS using the HO primitives. If the target BS can not re-use some information in the HO context for restoring the former MAC state or re-establishing connections, the Mobility Management Services entity in NCMS may exclude the information from the shared HO context.

14.2.5.2 Handover control protocol procedures

The HO Control Primitives are a set of primitives for supporting HO procedure between IEEE 802.16 entity and NCMS. At the NCMS side, the existence of a Mobility Management Services entity is assumed, which processes the HO Control Primitives.

Figure 353 to Figure 361 show the HO Control Primitives.

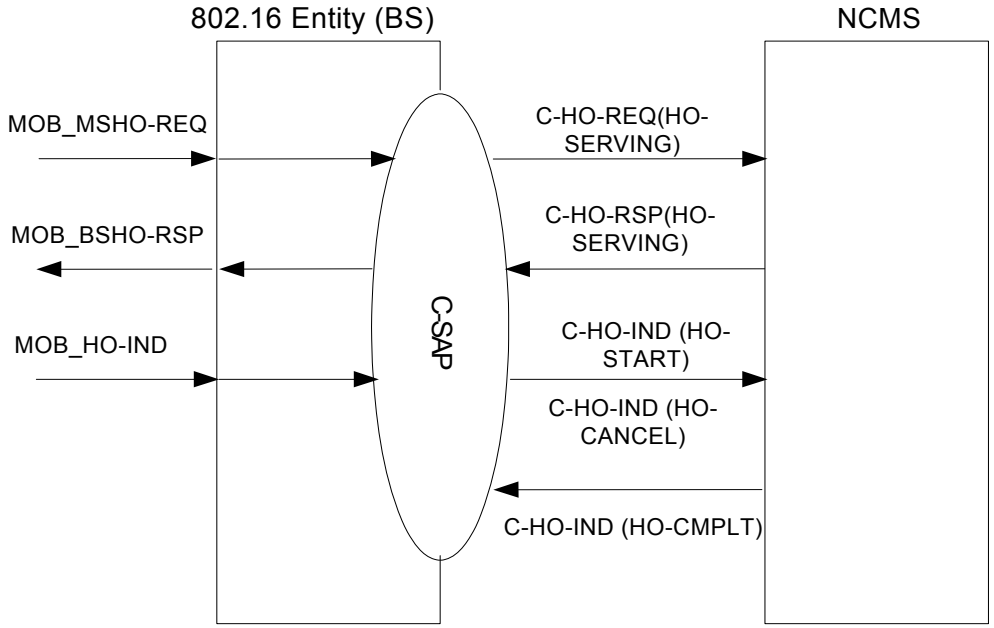

Figure 353—HO primitives flow between Serving BS and NCMS, BS initiated

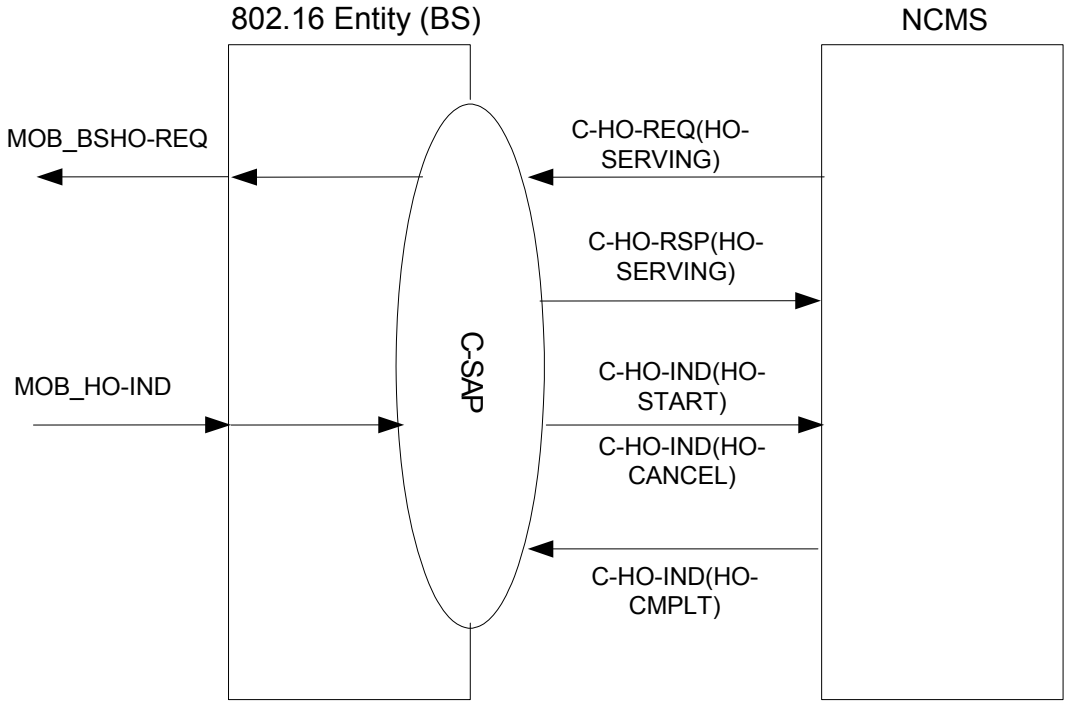

Figure 354—HO primitives flow between serving BS and NCMS, NCMS initiated

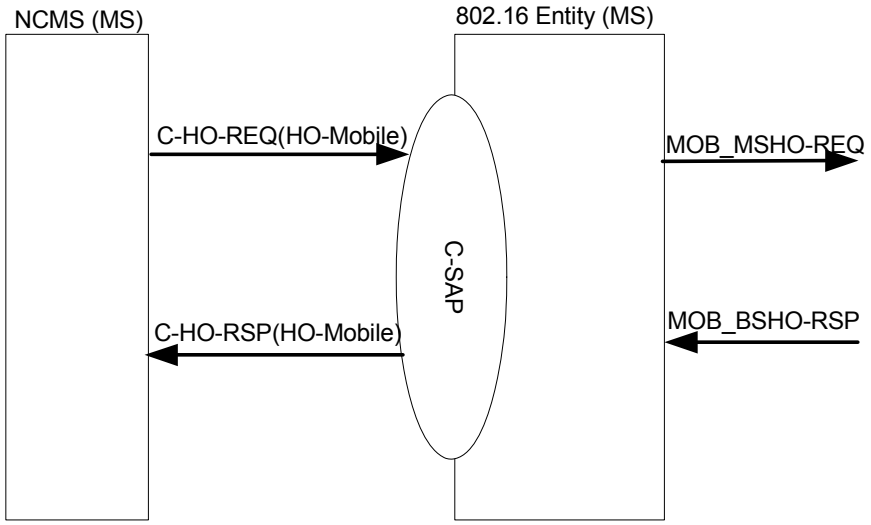

Figure 355—Primitive flow between NCMS at the MS and the MS when HO is initiated

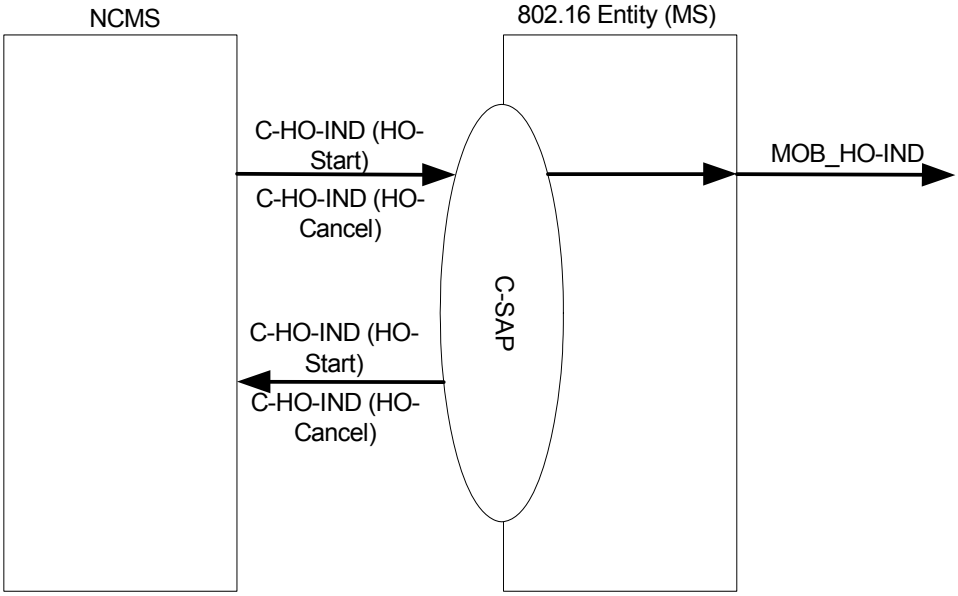

Figure 356—HO primitives flow between MS and NCMS(MS side) for sending MOB_HO-IND

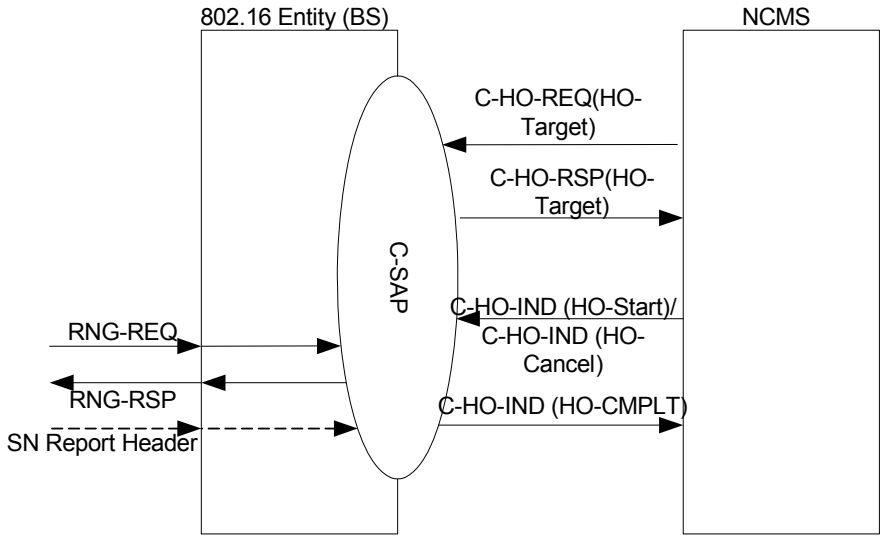

Figure 357—HO primitives flow between target BS and NCMS

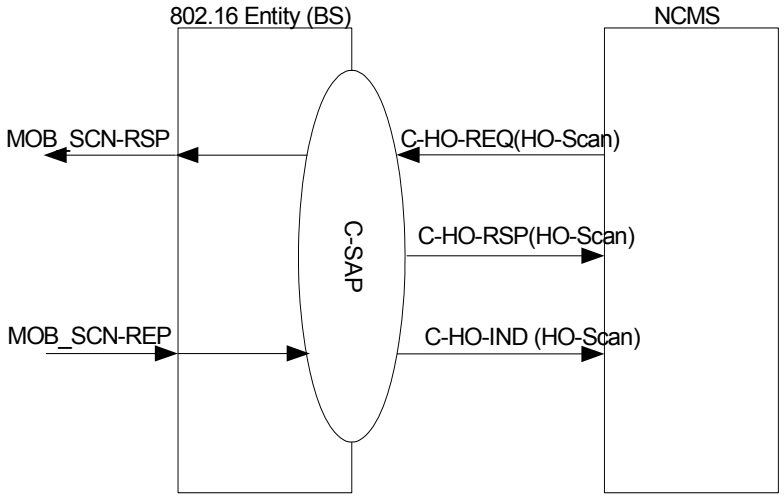

Figure 358—HO primitives flow between IEEE 802.16 entity (BS) and NCMS for scanning

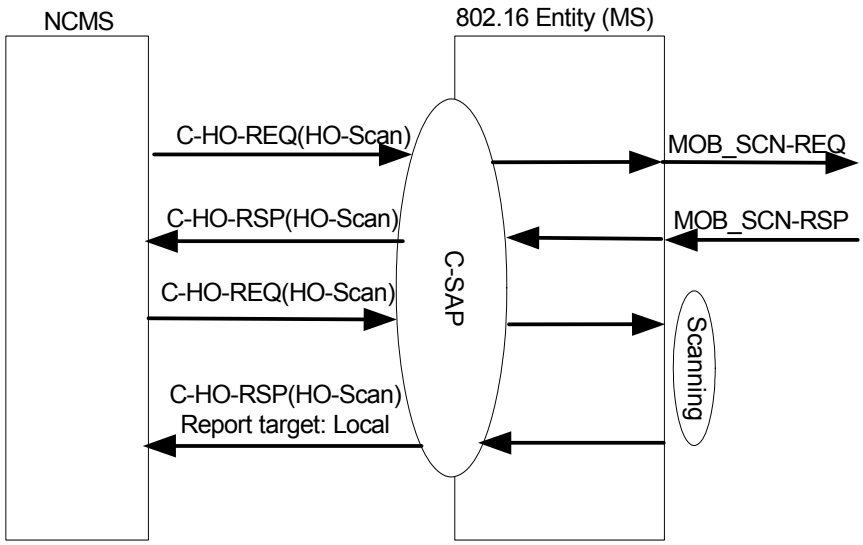

Figure 359—HO primitives flow between IEEE 802.16 entity (MS) and NCMS for Local Scanning Report

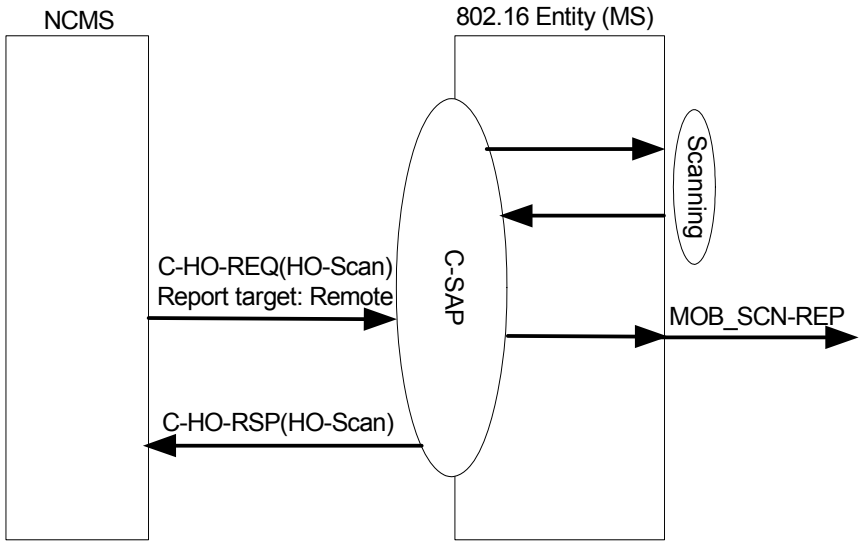

Figure 360—HO primitives flow between IEEE 802.16 entity (MS) and NCMS for Remote Scanning Report

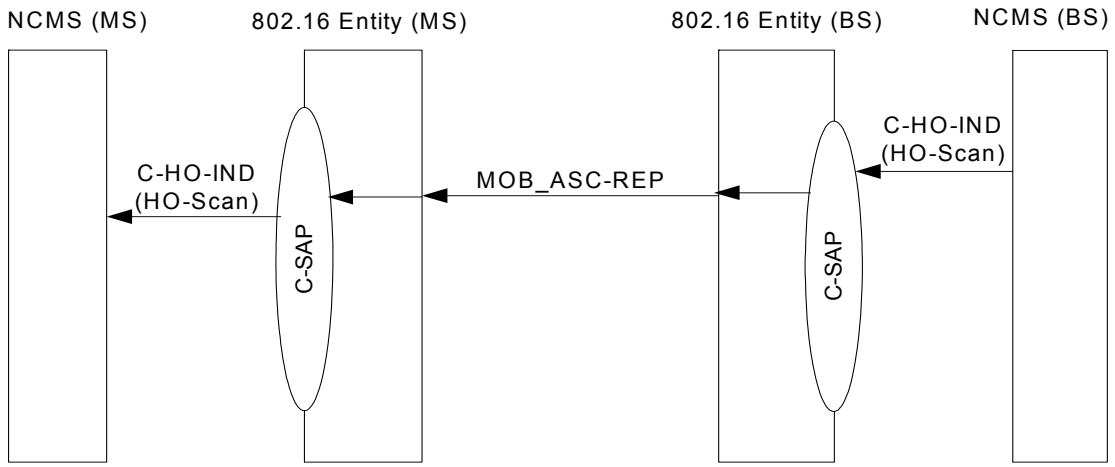

Figure 361—Primitives for association ranging report

14.2.5.2.1 C-HO-REQ

This primitive is used by an IEEE 802.16 entity or NCMS to trigger a handover procedure. The Action_Type included in this primitive defines the type of handover procedure to be performed. The possible Action_Types for this primitive are listed in table below:

Action_Type	Description
HO-Serving	Handover procedure between current serving BS and NCMS.
HO-Target	Handover procedure between target BS and NCMS
HO-Scan	Neighbor BS scanning procedure.
HO-Mobile	Handover procedure between Mobile Station and NCMS.

The following subclauses define the primitive when its action type is set to a specific action.

14.2.5.2.1.1 C-HO-REQ(Action_Type = HO-Serving)

14.2.5.2.1.1.1 Function

This primitive is used by a serving BS or the Mobility Management Services entity in NCMS to start an HO procedure. The primitive is only used by IEEE 802.16 entity (BS) and NCMS at BS side.

14.2.5.2.1.1.2 Semantics of the service primitive

The following parameters are included in this primitive:

C-HO-REQ

```
(
Operation_Type: Action,
Action_Type: HO-Serving,
Destination: BS or NCMS,
Attribute_List:
    Serving BSID,
    MS MAC Address,
    HO Type,
    Mode,
    Number of Recommended BSs,
    Candidate target BS list,
    Service flow information,
    CS parameter information
)
```

Serving BSID
Base station unique identifier (same number as that broadcasted on the DL-MAP message).

MS MAC Address
48-bit unique identifier used by MS.

HO Type
Indication of HO types; HO or MDHO/FBSS.

Mode
Various modes in Anchor BS update or Active Set Update.

Number of Recommended BSs
The number of BSs that are recommended by the MS or the serving BS as candidate target BSs. The information for each recommended BS is included in Candidate target BS list.

Candidate target BS list
For BS generated primitive, this is the list of BSs that are recommended for a target BS. Additional HO quality information such as Service Level Prediction and RF Signal Information also can be included in this list. For NCMS generated primitive, this is the list of recommended target BSs by the Mobility Management Services entity. The BSs in the list may be the candidate target BSs for HO or an Anchor BS or Active BSs for MDHO/FBSS according to the value of HO type and Mode MS Access Information, Newly Allocation Information, and HO Quality Information can be included in this list.

Service flow information
Information of all the service flows that have been established between the MS and the serving BS.

CS parameter information
Approved IP filter rules of a service flow such as packet classification rule and IPv6 flow label.

14.2.5.2.1.1.3 When generated

— IEEE 802.16 entity (BS) to NCMS: This primitive is generated when the BS receives a MOB_MSHO-REQ message from the MS
— NCMS to IEEE 802.16 entity (BS): This primitive is used when the Mobility Management Services entity in NCMS instructs the BS to start handover procedure for a particular MS.

14.2.5.2.1.1.4 Effect of receipt

— IEEE 802.16 entity (BS) to NCMS: The Mobility Management Services entity in NCMS processes the information from this primitive. And it may trigger a handover procedure to one or more target BS.
— NCMS to IEEE 802.16 entity (BS): The BS processes the information from this primitive and shall send MOB_BSHO-REQ to the MS to start the handover procedure.

14.2.5.2.1.2 C-HO-REQ(Action_Type = HO-Target)

14.2.5.2.1.2.1 Function

This primitive is used by the Mobility Management Services entity in NCMS to inform target BSs of the pending HO. The primitive is only used by IEEE 802.16 entity (BS) and NCMS at BS side.

14.2.5.2.1.2.2 Semantics of the service primitive

It delivers the following parameters:

C-HO-REQ
(
Operation_Type: Action,
Action_Type: HO-Target,
Destination: BS,
Attribute_List:
Serving BSID,
MS MAC Address,
HO Type,
Mode,
Service flow information,
HO Quality Information,
CS parameter information
)

Serving BSID
Base station unique identifier (Same number as that broadcasted on the DL-MAP message)
MS MAC Address
48-bit unique identifier used by MS
HO Type
Indication of HO types; HO or MDHO/FBSS
Mode
Various modes in Anchor BS update or Active Set Update
Service flow Information
Information of all the service flows that have been established between the MS and the serving BS
HO Quality Information
Information related with quality of HO procedure; Service Level Prediction, HO Optimization Flag, Arrival Time Difference, etc.
CS parameter information
Approved IP filter rules of a service flow such as packet classification rule and IPv6 flow label

14.2.5.2.1.2.3 When generated

When the Mobility Management Services entity in NCMS determines a target BS for a MS to handover to, the NCMS generates this primitive to start the handover process at the target BS.

14.2.5.2.1.2.4 Effect of receipt

The target BS prepares for the MS handover that may include pre-allocating resources for the MS and sends a response to the NCMS.

14.2.5.2.1.3 C-HO-REQ(Action_Type = HO-Scan)

14.2.5.2.1.3.1 Function

This primitive is issued by the Mobility Management Services entity in NCMS(BS) to request radio signal information of MSs. This primitive is also used by the Mobility Management Services entity in NCMS(SS/MS) to instruct the MS to request scanning interval, to start to scan or to report the scanning result to the NCMS(SS/MS) or to the Serving BS.

14.2.5.2.1.3.2 Semantics of the service primitive

The parameters of the primitive are as follow:

C-HO-REQ
(
Operation_Type: Action,
Action_Type: HO-Scan,
Destination: BS or MS,
Attribute_List:
Number of MS,
List of MS MAC Address,
Scan Duration,
Link Quality Threshold,
Link Status Report Period,
Report Target,
List of Neighboring BS,
List of Scanning Type
)

Number of MS
Number of MSs

List of MS MAC Address
The list of MS MAC Address

Scan Duration
Scan duration time

Signal Quality Threshold
Signal Quality threshold. Scanning report shall be made when link quality goes worse than this threshold.

Link Status Report Period
Time period indicating when the scanning report shall be sent.

Report Target
This indicates the object to which report shall be made.

List of Neighboring BS
The list of neighboring BS to which the MS would like to perform association.

List of Scanning Type
List of scanning type, 0b001, 0b010, or 0b011 corresponds to association type Level 0, 1, or 2, respectively. One scanning type for each neighboring BS.

14.2.5.2.1.3.3 When generated

— NCMS(BS) to IEEE 802.16 entity (BS): This primitive is generated when the Mobility Management Services entity in NCMS(Serving BS) decides that the MS should perform scanning and/or association of neighbor BSs and report the scanning result to the NCMS(Serving BS). In this case, attributes included in Attribute_list are number of MS and list of MS MAC Address.

— NCMS(SS/MS) to IEEE 802.16 entity (MS): This primitive is generated when the mobile management entity in the NCMS(SS/MS) decides that MS should send MOB-SCN-REQ for a request of scanning interval, perform scanning, send MOB_SCN-REP message to the Serving BS or report the scanning result to NCMS(SS/MS).

14.2.5.2.1.3.4 Effect of receipt

— NCMS(BS) to IEEE 802.16 entity (BS): When the primitive is received by a IEEE 802.16 entity (BS), the IEEE 802.16 entity (BS) shall transmit MOB_SCN-RSP to the MS to trigger the scanning procedure at the MS and generates C-HO-RSP(HO-Scan) to respond to NCMS(BS).

— NCMS(SS/MS) to IEEE 802.16 entity (MS): When the primitive is received by the IEEE 802.16 entity (MS), the MS shall perform scanning or scanning report procedure according to the parameters included in Attribute_List. If Report Target is not included in Attribute_List, the MS sends MOB_SCN-REQ message to the serving BS or starts to scan. If the report conditions defined by Link Quality Threshold and Link Status Report Period are satisfied, then the MS shall report the scanning result to NCMS(SS/MS).
If only Report Target is included in Attribute_List, MS shall report the scanning result according to the value of Report Target. If Report Target is remote, the scanning report is made remotely to the BS using MOB_SCN-REP message. If Report Target is local, the scanning report is made locally to NCMS(SS/MS).
The coexistence of Report Target and other attributes in Attribute_List is not allowed.

14.2.5.2.1.4 C-HO-REQ(Action_Type = HO-Mobile)

14.2.5.2.1.4.1 Function

This primitive is used by the MS or the Mobility Management Services entity in the NCMS at the MS side to indicate the initiation of the HO process. In case of MDHO/FBSS, it can be used to update Anchor BS or to add a new Active BS to the current Active set. The NCMS in the MS can use this primitive to inform the IEEE 802.16 entity (MS) to initiate the HO process and inform the serving BS of all the candidate BSs for HO as seen by the MS.

14.2.5.2.1.4.2 Semantics of the service primitive

The following parameters are included in this primitive:

C-HO-REQ
(
Operation_Type: Action,
Action_Type: HO-Mobile,
Destination: MS or NCMS,
Attribute_list:
Serving BSID,
MS MAC Address,
HO Type,
Mode,
Number of candidate target BSs,
List of candidate target BSs
)

Serving BSID
Base station unique identifier (same number as that broadcasted on the DL-MAP message).

MS MAC Address

48-bit unique identifier used by MS.

HO Type

Indication of HO types; HO or MDHO/FBSS.

Mode

Various modes in Anchor BS update or Active Set Update.

Number of candidate target BSs

Number of BSs that are recommended by the MS or BS as candidate target BSs. The information of each recommended BS is included in the list of candidate target BSs.

List of candidate target BSs

This is the list of recommended target BSs by the Mobility Management Services entity. The BSs in the list may be the candidate target BSs for HO or an Anchor BS or Active BSs for MDHO/FBSS according to the value of HO type and Mode. MS Access Information, Newly Allocation Information, and HO Quality Information can be included in this list.

14.2.5.2.1.4.3 When generated

— NCMS to IEEE 802.16 entity (MS): This primitive is used by the Mobility Management Services entity in NCMS to inform the IEEE 802.16 entity (MS) to initiate a handover.

— IEEE 802.16 entity (MS) to NCMS: This primitive is used when the MS receives the MOB_BSHO-REQ from the BS.

14.2.5.2.1.4.4 Effect of receipt

— IEEE 802.16 entity (MS): The MS generates MOB_MSHO-REQ MAC message to the serving BS providing it with all the candidate BSs.

— NCMS: The NCMS may instruct the MS to start the actual handover procedure (i.e., sending MOB_HO_IND).

14.2.5.2.2 C-HO-RSP

This primitive is used by a IEEE 802.16 entity or NCMS to respond a handover request. The Action_Type included in this primitive defines the type of handover procedure to be performed. The possible Action_Types for this primitive are listed in table below:

Action_Type	Description
HO-Serving	Handover procedure between current serving BS and NCMS.
HO-Target	Handover procedure between target BS and NCMS
HO-Scan	Neighbor BS scanning procedure.
HO-Mobile	Handover procedure between Mobile Station and NCMS

The following subclauses define the primitive when its action type is set to a specific action.

14.2.5.2.2.1 C-HO-RSP(Action_Type = HO-Serving)

14.2.5.2.2.1.1 Function

This primitive is generated by Mobility Management Services entity in NCMS or the serving IEEE 802.16 entity (BS) with the list of recommended target BSs. This primitive is sent in reply to the C-HO-REQ(HO-Serving) primitive.

14.2.5.2.2.1.2 Semantics of the service primitive

The following parameters are included in this primitive:

C-HO-RSP
(
Operation_Type: Action,
Action_Type: HO-Serving,
Destination: BS or NCMS,
Attribute_List:
MS MAC Address,
HO Type,
Mode,
Number of Recommended BSs,
Recommended target BS list
)

MS MAC Address
48-bit unique identifier used by MS

HO Type
Indication of HO types; HO or MDHO/FBSS

Mode
Various modes in Anchor BS update or Active Set Update

Number of Recommended BSs
The number of BSs that are recommended by the MS or the serving BS as candidate target BSs. The information for each recommended BS is included in Candidate target BS list.

Recommended target BS list
The list shall be a subset of the candidate target BS list from the corresponding HO request. The recommended target BS list is to be delivered to the MS in the MOB_BSHO-RSP. The BSs in the list may be the candidate target BSs for HO or an Anchor BS or Active BSs for MDHO/FBSS according to the value of HO type and Mode. MS Access Information, Newly Allocation Information, and HO Quality Information can be included in this list.

14.2.5.2.2.1.3 When generated

— IEEE 802.16 entity (BS) to NCMS: This primitive is generated to respond to C-HO-REQ(HO-Serving) primitive from NCMS.
— NCMS to IEEE 802.16 entity (BS): This primitive is used when the Mobility Management Services entity in NCMS accepts or rejects the HO request from the MS. This primitive includes a list of recommended target BSs from NCMS.

14.2.5.2.2.1.4 Effect of receipt

— IEEE 802.16 entity (BS) to NCMS: The Mobility Management Services entity in NCMS processes the information contained in the primitive.
— NCMS to IEEE 802.16 entity (BS): The BS processes the information from this primitive and shall send MOB_BSHO-RSP to the MS.

14.2.5.2.2.2 C-HO-RSP(Action_Type = HO-Target)

14.2.5.2.2.2.1 Function

This primitive is used by the target IEEE 802.16 entity (BS) responding to the C-HO-REQ(HO-Target) primitive from Mobility Management Services entity in NCMS.

14.2.5.2.2.2.2 Semantics of the service primitive

The following parameters are included in this primitive:

C-HO-RSP
(
Operation_Type: Action,
Action_Type: HO-Target,
Destination: NCMS,
Attribute_List:
MS MAC Address,
Target BSID,
Result Flag,
HO Type,
Mode,
MS Access Information,
Newly Allocated Information,
HO Quality Information
)

Target BSID
Base station unique identifier of the target BS

MS MAC Address
48-bit unique identifier used by MS

Result Flag

HO Type
Indication of HO types; HO or MDHO/FBSS

Mode
Various modes in Anchor BS update or Active Set Update

MS Access Information
Information needed by MS to access the target BS; HO ID, CQI CH Information, HO Authorization Policy Information

Newly Allocated Information
Newly allocated information for the MS or each service flow; SAID, CID

HO Quality Information
Information related with quality of HO procedure; HO Optimization Flag, Service Level Prediction

14.2.5.2.2.2.3 When generated

When the target IEEE 802.16 entity (BS) generates this primitive to respond to the C-HO-REQ(HO-Target) primitive from the NCMS.

14.2.5.2.2.2.4 Effect of receipt

The Mobility Management Services entity in NCMS processes the information contained in this primitive and may generate a primitive to the serving IEEE 802.16 entity (BS) to proceed in the HO procedure.

14.2.5.2.2.3 C-HO-RSP(Action_Type = HO-Scan)

14.2.5.2.2.3.1 Function

This primitive is issued by an IEEE 802.16 entity to respond to C-HO-REQ(HO-Scan)

14.2.5.2.2.3.2 Semantics of the service primitive

The parameters of the primitive are as follows:

C-HO-RSP
(
Operation_Type: Action,
Action_Type: HO-Scan,
Destination: NCMS,
Attribute_List:
Number of MS,
List of MS MAC Address,
List of Signal information,
Scan Duration,
Start Frame,
MIH Capability,
List of Neighboring BS,
List of Scanning Type,
List of Association Ranging Assignment,
Result Code
)

Number of MS
Number of MSs
List of MS MAC Address
The list of MS MAC Address
List of Signal Information
Downlink Physical Service Level,
Downlink RSSI mean,
Downlink RSSI standard deviation,
Downlink CINR mean,
Downlink CINR standard deviation,
Scan Duration
Scan duration time
Start Frame
Scan start frame
MIH Capability
MIH capability of the current BS. This parameter carries the MIH capability field in the DCD message, if available.
List of Neighboring BS
The list of neighboring BS to which the MS would like to perform association.
List of Scanning Type
List of scanning type, 0b001, 0b010, or 0b011 corresponds to association type Level 0, 1, or 2, respectively. One scanning type for each neighboring BS.
List of Association Ranging Assignment
Rendezvous Time,
Dedication Codes,
Transmission Opportunity Offset
Result Code
The result of scan report message transmission. When there is no available BS to scan, ‘No Available BS’ result code shall be included.

14.2.5.2.2.3.3 When generated

— IEEE 802.16 entity (BS) to NCMS: For a IEEE 802.16 entity (BS), this primitive is generated when the BS receives C-HO-REQ(HO-Scan).
— IEEE 802.16 entity (MS) to NCMS: For a IEEE 802.16 entity (MS), this primitive is generated when one of following events are occurred:
  1) The MS receives MOB-SCN-RSP message.
  2) One of conditions for scanning report defined C-HO-REQ(HO-Scan) is satisfied.
  3) The MS receives C-HO-REQ(Scan) primitive with Report Target = remote and sends MOB_SCN-REP message to BS.
  4) The MS receives C-HO-REQ(Scan) primitive with Report Target = local.

14.2.5.2.2.3.4 Effect of receipt

— IEEE 802.16 entity (BS) to NCMS: The Mobility Management Services entity in NCMS may decide the specific MS and its potential target BS for BS-initiated HO based on the reported signal quality in the C-HO-RSP(HO-Scan) primitive.
— IEEE 802.16 entity (MS) to NCMS: The Mobility Management Services entity in NCMS may instruct MS to start to scan or to handover to the selected BS based on the information from C-HO-RSP(HO-Scan).

14.2.5.2.2.4 C-HO-RSP(Action_Type = HO-Mobile)

14.2.5.2.2.4.1 Function

This primitive is used by the MS to inform the Mobility Management Services entity in the NCMS MS about the arrival of a MOB-BSHO_RSP MAC message in response to the previously generated MOB_MSHO-REQ message and the pruned down list of the candidate BSs selected by the Mobility Management in the NCMS for the upcoming actual HO phase.

14.2.5.2.2.4.2 Semantics of the service primitive

The following parameters are included in this primitive:

C-HO-RSP
(
Operation_Type: Action,
Action_Type: HO-Mobile,
Destination: NCMS,
Attribute_list:
Serving BSID,
MS MAC Address,
HO Type,
Mode,
Number of candidate target BSs,
List of candidate target BSs
)

Serving BSID
Base station unique identifier (same number as that broadcasted on the DL-MAP message).
MS MAC Address
48-bit unique identifier used by MS.
HO Type

Indication of HO types; HO or MDHO/FBSS.

Mode

Various modes in Anchor BS update or Active Set Update.

Number of candidate target BSs

Number of BSs that are recommended by the MS or BS as candidate target BSs. The information of each recommended BS is included in the list of candidate target BSs.

List of candidate target BSs

This is the list of recommended target BSs by the Mobility Management Services entity. The BSs in the list may be the candidate target BSs for HO or an Anchor BS or Active BSs for MDHO/FBSS according to the value of HO type and Mode. MS Access Information, Newly Allocation Information, and HO Quality Information can be included in this list.

14.2.5.2.2.4.3 When generated

This primitive is used by the IEEE 802.16 entity (MS) to inform the Mobility Management Services entity about the arrival of a response to the previously generated C-HO-REQ(HO-Mobile) primitive.

14.2.5.2.2.4.4 Effect of receipt

The NCMS learns about the pruned down list of the potential candidates BS to select as the final candidate.

14.2.5.2.3 C-HO-IND

This primitive is used by a BS or NCMS to notify the other entity of a handover event. The possible Event_Types for this primitive are listed in table below:

Event_Type	Description
HO-Start	Indicating the MS is ready to handover from the current serving BS to the target BS
HO-Cancel	Indicating the current HO procedure is cancelled
HO-Scan	Providing scanning result to NCMS
HO-CMPLT	Indicating MS network re-entry completion at the target BS

The following subclauses define the primitive when its event type is set to a specific action.

14.2.5.2.3.1 C-HO-IND (Event_Type = HO-Start)

14.2.5.2.3.1.1 Function

In case of HO, this primitive is used to indicate the starting of the actual HO. In case of MDHO/FBSS, it can be used to update Anchor BS or to add a new Active BS to the current Active set. Both the serving IEEE 802.16 entity (BS) and the Mobility Management Services entity in the NCMS can use this primitive to inform the IEEE 802.16 target BS entity or the Mobility Management Services entity in the NCMS of the actual HO starting process. In addition, the Mobility Management Services entity in the NCMS at MS side can use this primitive to inform the IEEE 802.16 entity (MS) about the actual HO starting process.

14.2.5.2.3.1.2 Semantics of the service primitive

The following parameters are included in this primitive:

C-HO-IND

(
Event_Type: HO-Start,
Destination: BS, MS, or NCMS,
Attribute_List:
MS MAC Address,
HO Type,
Mode,
Target BSID
)

MS MAC Address

48-bit unique identifier used by MS

HO Type

Indication of HO types; HO or MDHO/FBSS

Mode

Various modes in Anchor BS update or Active Set Update

Target BSID

Base station unique identifier to which the MS attempts the actual HO

14.2.5.2.3.1.3 When generated

— IEEE 802.16 entity (BS) to NCMS: This primitive is generated when MOB_HO-IND is received from the MS.
— NCMS to IEEE 802.16 entity (BS): This primitive is used by the Mobility Management Services entity in NCMS to inform the target IEEE 802.16 entity (BS) the start of the MS handover.
— IEEE 802.16 entity (MS) to NCMS: This primitive is generated after the MS sends MOB_HO-IND message to start the actual HO.
— NCMS to IEEE 802.16 entity (MS): This primitive is generated by NCMS to request the MS to start the HO by sending MOB_HO-IND message to the serving BS.

14.2.5.2.3.1.4 Effect of receipt

— IEEE 802.16 entity (BS) to NCMS: The Mobility Management Services entity in NCMS processes the information contained in the primitive and may generate C-HO-IND (HO-Start) to the target IEEE 802.16 entity (BS).
— NCMS to IEEE 802.16 entity (BS): The target IEEE 802.16 entity (BS) prepares for the MS handover as indicated in this primitive.
— IEEE 802.16 entity (MS) to NCMS: The NCMS prepares the network re-entry with the target BS.
— NCMS to IEEE 802.16 entity (MS): The MS transmits MOB_HO-IND message to the serving BS to start the HO.

14.2.5.2.3.2 C-HO-IND (Event_Type = HO-Cancel)

14.2.5.2.3.2.1 Function

In case of HO, this primitive indicates the cancellation of the pending HO. In case of MDHO/FBSS, it can be used to cancel anchor BS update or Active set update, or to remove a target BS from the current active set. Both of the serving IEEE 802.16 entity and the Mobility Management Services entity in NCMS can use this primitive.

14.2.5.2.3.2.2 Semantics of the service primitive

This primitive conveys the following parameters:

C-HO-IND

(
Event_Type: HO-Cancel,
Destination: BS, MS, or NCMS,
Attribute_List:
MS MAC Address,
HO Type,
Mode
)

MS MAC Address
48-bit unique identifier used by MS

HO Type
Indication of HO type; HO and MDHO/FBSS

Mode
It is valid for MDHO/FBSS and cancels Anchor BS update or Active set update.
In addition, it may indicate removal of the target BS from the current active set.

14.2.5.2.3.2.3 When generated

— IEEE 802.16 entity (BS) to NCMS: This primitive is generated when MOB_HO-IND is received from the MS.
— NCMS to IEEE 802.16 entity (BS): This primitive is used by the Mobility Management Services entity in NCMS to inform the target IEEE 802.16 entity (BS) the HO procedure is cancelled.
— IEEE 802.16 entity (MS) to NCMS: This primitive is generated after the MS sends MOB_HO-IND message to cancel the actual HO.
— NCMS to IEEE 802.16 entity (MS): This primitive is generated by NCMS to request the MS to cancel the HO by sending MOB_HO-IND message to the serving BS

14.2.5.2.3.2.4 Effect of receipt

— IEEE 802.16 entity (BS) to NCMS: The Mobility Management Services entity in NCMS processes the information contained in the primitive and may generate C-HO-IND (HO-Cancel) to the target IEEE 802.16 entity (BS).
— NCMS to IEEE 802.16 entity (BS): The target IEEE 802.16 entity (BS) shall release all resources related to the MS handover.
— IEEE 802.16 entity (MS) to NCMS: The NCMS completes HO cancellation procedure.
— NCMS to IEEE 802.16 entity (MS): The MS transmits MOB_HO-IND message to the serving BS to cancel the HO.

14.2.5.2.3.3 C-HO-IND (Event_Type = HO-Scan)

14.2.5.2.3.3.1 Function

On the uplink, this primitive is used to indicate the reception of MOB_SCN-REP message from the MS. The IEEE 802.16 entity (BS) uses this primitive to report MS radio information to the NCMS.

On the downlink, this primitive is used by the NCMS to forward the ranging parameters to the IEEE 802.16 entity (BS) in order to trigger the MOB_ASC-REP message, and by the IEEE 802.16 entity (MS) to forward the ranging parameters to the NCMS.

14.2.5.2.3.3.2 Semantics of the service primitive

The following parameters are included in this primitive:

C-HO-IND
(
Event_Type: HO-Scan,
Destination: NCMS, BS, MS,
Attribute_List:
MS MAC Address,
RF Signal information,
List of Neighboring BS,
List of Association Ranging Parameters
)

MS MAC Address
48-bit unique identifier used by MS
RF Signal Information
Downlink signal information measured by the MS; DL CINR mean, DL RSSI mean, Relative delay, BS RTD, etc.
List of Neighboring BS
The list of neighboring BS reporting association ranging parameters.
List of Association Ranging Parameters
PHY offset (Timing adjust, power level adjust, SLP, etc.).

14.2.5.2.3.3.3 When generated

— IEEE 802.16 entity (BS) to NCMS: This primitive is generated by IEEE 802.16 entity (BS) when it receives a MOB_SCAN-REP.
— NCMS to IEEE 802.16 entity (BS): This primitive may be generated by the NCMS of the IEEE 802.16 entity (serving BS) after it has collected and aggregated association ranging parameters from the neighboring BSs.
— IEEE 802.16 entity (MS) to NCMS: This primitive is generated by the IEEE 802.16 entity (MS) to forward the ranging parameters to the NCMS.

14.2.5.2.3.3.4 Effect of receipt

— IEEE 802.16 entity (BS) to NCMS: NCMS processes the information and may decide to trigger a BS-initiated handover.
— NCMS to IEEE 802.16 entity (BS): This primitive will trigger the IEEE 802.16 entity (BS) to trigger the MOB_ASC-REP message.
— IEEE 802.16 entity (MS) to NCMS: The NCMS(MS) will store the ranging parameters as association records.

14.2.5.2.3.4 C-HO-IND (Event_Type = HO-CMPLT)

14.2.5.2.3.4.1 Function

This primitive is used by both BS and NCMS to notify the handover process is completed.

14.2.5.2.3.4.2 Semantics of the service primitive

It delivers the following parameters:

C-HO-IND
(
Event_Type: HO-CMPLT,

Destination: NCMS or BS,
Attribute_List:
Target BSID,
MS MAC Address,
List of Last received SDU SNs
)

Target BSID
Base station unique identifier of the target BS
MS MAC Address
48-bit unique identifier used by MS
List of Last received SDU SNs
(
SFID
Last received SDU SN
)
The sequence number of the last MAC SDU that the MS received before handover to the target BS. The connection associated with the SDU SN is identified by SFID when SDU SN feedback is enabled.

14.2.5.2.3.4.3 When generated

— IEEE 802.16 entity (BS) to NCMS: This primitive is generated by target IEEE 802.16 entity (BS) when the MS completes network re-entry at the target BS. If SDU SN feedback is enabled, the target IEEE 802.16 entity (BS) shall generates this primitive after it has received the SN report header.
— NCMS to IEEE 802.16 entity (BS): This primitive is generated by the NCMS after finishing handover process in the NCMS side. It is used to inform serving BS to release its corresponding resource.

14.2.5.2.3.4.4 Effect of receipt

— IEEE 802.16 entity (BS) to NCMS: NCMS completes handover procedure.
— NCMS to IEEE 802.16 entity (BS): The Serving BS releases its resource for the MS accordingly.

14.2.5.3 MIH control protocol procedures

The MIH Control Primitives provide transport of IEEE 802.21 MIHF frames between the IEEE 802.16 entity and the NCMS. This enables the NCMS to map between MIHF frames and primitives on the IEEE 802.21 MIH-SAP, consistent with 5.5.3 of IEEE Std 802.21.

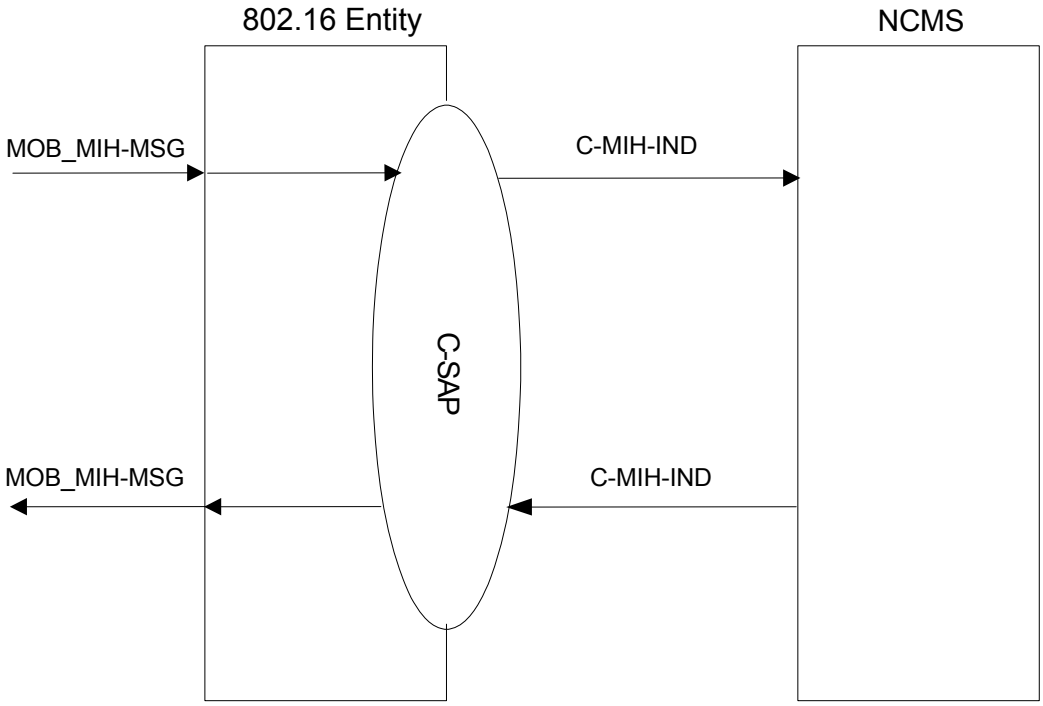

Figure 362—MIH primitive Flow between IEEE 802.16 entity and NCMS for IEEE 802.21 support

14.2.5.3.1 C-MIH-IND

14.2.5.3.1.1 Function

This primitive used by the IEEE 802.16 entity to indicate on the C-SAP the reception of a MOB_MIH-MSG on the air interface and to convey the IEEE 802.21 MIHF frame carried in the message to the NCMS.

This primitive is used by the NCMS to request on the C-SAP that the IEEE 802.16 entity transmits a MOB_MIH-MSG message containing the IEEE 802.21 MIHF frame carried in the primitive.

14.2.5.3.1.2 Semantics of the service primitive

C-MIH-IND

```
(
Event_Type: MIH-IND,
Destination: NCMS, BS, MS,
Attribute_List:
    MIHF frame,
)
```

MIHF frame

MIHF frame as described in 8.2 of IEEE Std 802.21

14.2.5.3.1.3 When generated

— IEEE 802.16 entity to NCMS: This primitive is generated by the IEEE 802.16 entity when the IEEE 802.16 entity receives a MOB_MIH-MSG from a peer IEEE 802.16 entity.
— NCMS to IEEE 802.16 entity: This primitive is generated by the NCMS when the NCMS needs to convey an IEEE 802.21 MIHF frame through the IEEE 802.16 entity to a peer IEEE 802.16 entity.

14.2.5.3.1.4 Effect of receipt

— IEEE 802.16 entity to NCMS: On receipt of this primitive from the C-SAP by the NCMS, the NCMS should map the IEEE 802.21 MIH Message embedded in the IEEE 802.21 MIHF frame in the primitive onto the equivalent primitive on the MIH_SAP consistent with IEEE Std 802.21, 5.5.3.
— NCMS to IEEE 802.16 entity: On receipt of this primitive from the C-SAP by the IEEE 802.16 entity, the IEEE 802.16 entity shall transmit a MOB_MIH-MSG message containing the IEEE 802.21 MIHF frame conveyed in the MIHF frame field of the primitive.

14.2.6 Radio resource management

The RRM Primitives are a set of primitives for supporting RRM procedures between BS and NCMS.

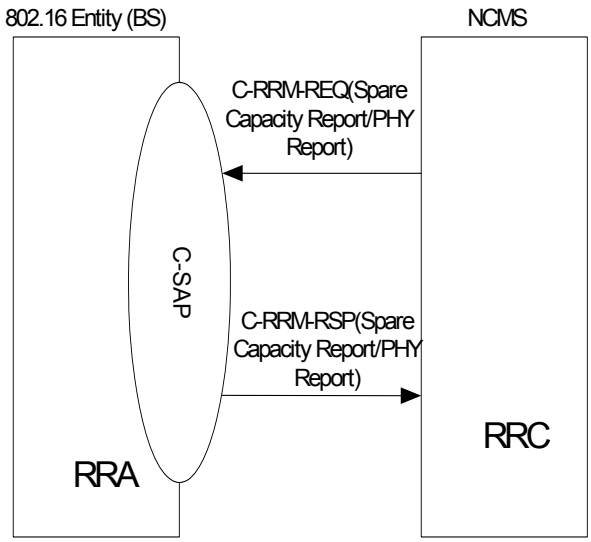

Figure 363—Primitive flow of C-RRM-REQ/RSP

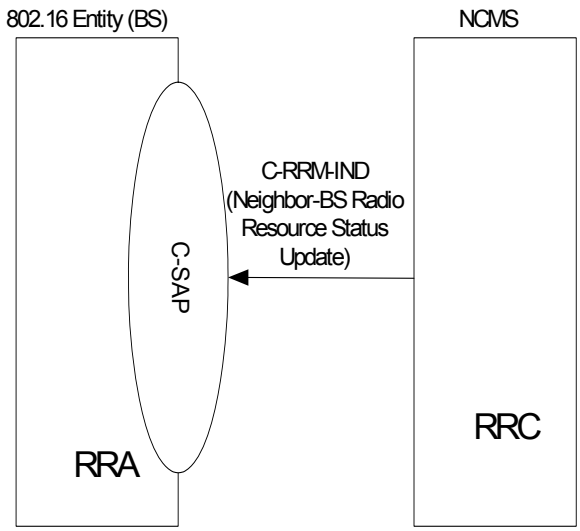

Figure 364—Primitive flow of C-RRM-IND (Neighbor-BS Radio Resource Status Update)

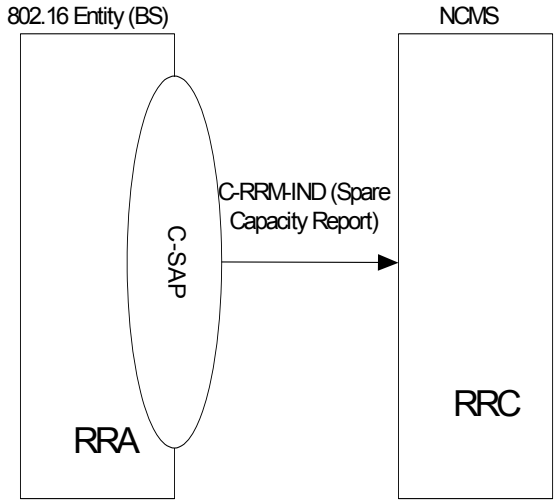

Figure 365—Primitive flow of C-RRM-IND (Spare Capacity Report)

14.2.6.1 C-RRM-REQ

The Radio Resource Controller (RRC) may use this primitive to request a BS to provide spare capacity information to the RRC or to provide a report of the link level quality for a specific MS. The possible Action_Types for this primitive are listed in the following table:

Action_Type	Description
Spare Capacity Report	Report the spare capacity information
PHY report	Report the link level quality for a specific MS

14.2.6.1.1 C-RRM-REQ (Action_Type = Spare Capacity Report)

14.2.6.1.1.1 Function

This primitive shall be used by NCMS (BS side) to request the BS to send spare capacity information periodically or event driven.

14.2.6.1.1.1.1 Semantics of the service primitive:

The parameters of the primitives are as follows:

C-RRM-REQ
(
Operation_Type: Action,
Action_Type: Spare Capacity Report,
Destination: BS,
Attribute_List:
Spare Capacity Report Type,
Report Characteristics,
Reporting Period P,
Reporting Threshold RT
)

Spare Capacity Report Type
Type of requested report profile. 1 for spare capacity report type 1. (Types > 1 reserved for future types)

Report Characteristics
Bitmap. Indicates whether report shall be sent periodically, or event driven. It also indicates whether the report shall include the details about permutation zones and subchannels. Following events are possible (separate or in combination), which may be selected by setting the respective bit:
Bit 0: Periodically as defined by reporting period P.
Bit 1: regularly whenever resources have changed as defined by RT since the last measurement report.
Bit 2: Reporting shall be given per permutation zones
Bit 3: Change of Radio Resources Allocation
The event "Change of Radio Resources Allocation" means that a report shall be given whenever any of the following parameters at the BS have changed:
N_PERMUTATION_ZONES
OFDMA symbol offset
Permutation Scheme
Permutation Zone Subchannels Bitmap

Reporting Period P
The Time P is used by BS (RRA) as the reporting period for producing the information requested by RRC.

Reporting Threshold RT

The threshold value RT shall be used by BS (RRA) to send another Spare Capacity report as soon as the spare capacity increases or decreases by more than that threshold value.

14.2.6.1.1.1.2 When generated

The NCMS at BS side may use this primitive to order a BS to send periodic and/or event-driven radio resource capacity reports.

14.2.6.1.1.1.3 Effect of receipt

The BS shall respond with a C-RRM-RSP (Spare Capacity Report) and, if applicable, one or more subsequent periodic or event-driven C-RRM-IND (Spare Capacity Report) primitives.

14.2.6.1.2 C-RRM-REQ (Action_Type = PHY report)

14.2.6.1.2.1 Function

The Radio Resource Controller (RRC) may use this primitive to request a BS to provide a report of the link level quality for a specific MS.

14.2.6.1.2.2 Semantics of the service primitive:

C-RRM-REQ
(
Operation_Type: Action,
Action_Type: PHY Report,
Destination: BS,
Attribute_List:
MS MAC Address
)

MS MAC Address
48-bit unique identifier of the MS

14.2.6.1.2.3 When generated

The NCMS at BS side may use this primitive at any time to order a BS to report on the PHY channel parameters (RSSI, CINR as well as spectral efficiency as expressed by the Physical Service Level) for a specific MS.

14.2.6.1.2.4 Effect of receipt

The BS shall generate the required UL channel measurements and shall request the SS via MAC Management messages to send the required DL channel measurement reports to the BS; once the measured values are available, the BS shall forward these to the NCMS (BS side) by a C-RRM-RSP (PHY report) primitive.

14.2.6.2 C-RRM-RSP

The BS may use this primitive to report spare capacity information to the RRC, as requested by the RRC within the Spare Capacity Request primitive. Or the BS may use this primitive to provide a report of the link level quality for a specific MS to the Radio Resource Controller (RRC). The possible Action_Types for this primitive are listed in the table below:

Action_Type	Description
Spare Capacity Report	Report the spare capacity information
PHY report	Report the link level quality for a specific MS

14.2.6.2.1 C-RRM-RSP(Action_Type = Spare Capacity Report)

14.2.6.2.1.1 Function

The BS may use this primitive to provide spare capacity information to the RRC, as requested by the RRC within the Spare Capacity Request primitive. The BS may also use this primitive to inform the RRC about preferred Radio Resources used for transmission at this BS, using the attribute Permutation Zone Subchannels Bitmap.

14.2.6.2.1.2 Semantics of the service primitive:

C-RRM-RSP
(
Operation_Type: Action,
Action_Type: Spare Capacity Report,
Destination: NCMS,
Attribute_List:
Spare Capacity Report Type,
N_PERMUTATION_ZONES,
For all Permutation Zones:
OFDMA symbol offset,
Permutation scheme,
Permutation Zone Subchannels Bitmap,
Available Radio Resource,
Radio Resource Fluctuation
)

Spare Capacity Report Type
Type of report profile = 1

N_PERMUTATION_ZONES
Number of radio frame subsections for which the spare capacity will be indicated. A value of 1 indicates that the entire DL and UL radio subframe is considered to be a single permutation zone each, in which case the DL/UL Available Radio Resource indicators cover the full DL and UL radio subframes.

OFDMA symbol offset
Denotes the start of the zone (counting from the frame preamble and starting from 0)

Permutation scheme
Denotes permutation scheme used in current permutation zone. The following types are possible:
- DL PUSC permutation
- DL FUSC permutation
- DL Optional FUSC permutation
- DL AMC
- DL TUSC1
- DL TUSC2

- UL PUSC
- UL AMC

Permutation Zone Subchannels Bitmap

Indicates the subchannels preferred for transmission in this Permutation Zone at the respective BS.

Available Radio Resource

Percentage of reported average available subchannels and symbols resources ("slots") per frame. If N_PERMUTATION_ZONES > 1, the indicator covers a permutation zone instead of the entire DL or UL radio subframe.

Radio Resource Fluctuation

Radio Resource Fluctuation is used to indicate the degree of fluctuation in DL and UL channel data traffic throughputs. If N_PERMUTATION_ZONES > 1, the indicator covers a permutation zone instead of the radio frame. When Radio Resource Fluctuation is set to 0, it implies that the DL and UL data traffic is constant in data throughput. Hence, there is no fluctuation in Available Radio Resource. When Radio Resource Fluctuation is set to maximum value 255, the data traffic is very volatile in nature, which makes the Available Radio Resource unpredictable. The Radio Resource Fluctuation for all traffic models should be in the range of 0 to 255.

14.2.6.2.1.3 When generated

The BS shall send this primitive in response to a C-RRM-REQ (Spare Capacity Report) received from the NCMS.

14.2.6.2.1.4 Effect of receipt

The NCMS may use the received Spare Capacity information about the BSs for several purposes, e.g., for forwarding the aggregated BS capacity information to all the BSs by means of the C-RRM-IND (Neighbor-BS Radio Resource Status Update) primitive, for Service Flow Admission Control, or for reconfiguring the allocated BS resources.

14.2.6.2.2 C-RRM-RSP(Action_Type = PHY Report)

14.2.6.2.2.1 Function

The BS may use this primitive to provide a report of the link level quality for a specific MS to the Radio Resource Controller (RRC).

14.2.6.2.2.2 Semantics of the service primitive:

C-RRM-RSP

```
(
Operation_Type: Action,
Action_Type: PHY Report,
Destination: NCMS,
Attribute_List:
    MS MAC Address,
    Downlink Physical Service Level,
    Downlink RSSI mean,
    Downlink RSSI standard deviation,
    Downlink CINR mean,
    Downlink CINR standard deviation,
    Uplink Physical Service Level,
    Uplink RSSI mean,
```


Uplink RSSI standard deviation,
Uplink CINR mean,
Uplink CINR standard deviation
)

Downlink Physical Service Level
Channel rate available for the MS calculated as a multiple of 1/32 of nominal bandwidth in the correspondent direction assuming 1 bit/Hz. For example, if DL channel bandwidth is 10 MHz, value PSL=4 means 4 × 1/32 × 10 Mbps = 1.25 Mbps. 1 PSL 96 (Number of subchannels in different OFDMA modes is multiple of 16 or 32; highest modulation (QAM64) provides 3 bits/Hz)

Downlink RSSI mean
As specified in 8.1.9 Channel quality measurements.

Downlink RSSI standard deviation
As specified in 8.1.9 Channel quality measurements.

Downlink CINR mean
As specified in 8.1.9 Channel quality measurements.

Downlink CINR standard deviation
As specified in 8.1.9 Channel quality measurements.

Uplink Physical Service Level
Channel rate available for the MS calculated as a multiple of 1/32 of nominal bandwidth in the correspondent direction assuming 1 bit/Hz. (see definition of Downlink Physical Service Level)

Uplink RSSI mean
As specified in 8.1.9 Channel quality measurements.

Uplink RSSI standard deviation
As specified in 8.1.9 Channel quality measurements.

Uplink CINR mean
As specified in 8.1.9 Channel quality measurements.

Uplink CINR standard deviation
As specified in 8.1.9 Channel quality measurements.

14.2.6.2.2.3 When generated

The BS shall send this primitive in response to a C-RRM-REQ (PHY Report) received from the NCMS, after having retrieved the required PHY channel measurement data.

14.2.6.2.2.4 Effect of receipt

The NCMS may use the received PHY Report data of the respective MS for any purpose, e.g., as a reason for initiating handovers or service flow modifications.

14.2.6.3 C-RRM-IND

This primitive can be used by RRC to inform a Serving BS about the list of Neighbor BSs that are potential HO Target Base Stations for any MS's being served by the SBS, including an information about their radio resource status. And it can also be used by the RRA to report the spare capacity information to the RRC periodically or as event driven. The possible event types for this primitive are listed in the table below:

Event_Type	Description
Spare Capacity Report	Report the spare capacity information
Neighbor-BS Radio Resource Status Update	Inform neighbor list BS's list or related information about the radio resource status

14.2.6.3.1 C-RRM-IND (Event_Type = Spare Capacity Report)

14.2.6.3.1.1 Function

The primitive provides the mechanism to report the spare capacity information to the RRC whenever this is not the immediate response to a report solicitation from RRC.

14.2.6.3.1.2 Semantics of the service primitive:

C-RRM-IND
(
Event_Type: Spare Capacity Report,
Destination: NCMS,
Attribute_List:
Spare Capacity Report Type,
N_PERMUTATION_ZONES,
For all Permutation Zones:
OFDMA symbol offset,
Permutation scheme,
Available Radio Resource,
Radio Resource Fluctuation
)

Spare Capacity Report Type
Type of report profile = 1

N_PERMUTATION_ZONES
Number of radio frame subsections for which the spare capacity will be indicated. A value of 1 indicates that the entire DL and UL radio subframe is considered to be a single permutation zone each, in which case the DL/UL Available Radio Resource indicators cover the full DL and UL radio subframes.

OFDMA symbol offset
Denotes the start of the zone (counting from the frame preamble and starting from 0)

Permutation scheme
Denotes permutation scheme used in current permutation zone. The following types are possible:
- DL PUSC permutation
- DL FUSC permutation
- DL Optional FUSC permutation
- DL AMC
- DL TUSC1
- DL TUSC2
- UL PUSC
- UL AMC

Permutation Zone Subchannels Bitmap

Indicates the subchannels preferred for transmission in this Permutation Zone at the respective BS.

Available Radio Resource

Percentage of reported average available subchannels and symbols resources ("slots") per frame. If N_PERMUTATION_ZONES > 1, the indicator covers a permutation zone instead of the entire DL or UL radio subframe.

Radio Resource Fluctuation

Radio Resource Fluctuation is used to indicate the degree of fluctuation in DL and UL channel data traffic throughputs. If N_PERMUTATION_ZONES > 1, the indicator covers a permutation zone instead of the radio frame. When Radio Resource Fluctuation is set to 0, it implies that the DL and UL data traffic is constant in data throughput. Hence, there is no fluctuation in Available Radio Resource. When Radio Resource Fluctuation is set to maximum value 255, the data traffic is very volatile in nature, which makes the Available Radio Resource unpredictable. The Radio Resource Fluctuation for all traffic models should be in the range of 0 to 255.

14.2.6.3.1.3 When generated

The BS shall use this primitive for delivering a periodic or event-triggered Spare Capacity Report which is not the immediate response to a C-RRM-REQ (Spare Capacity Report) received from the NCMS.

14.2.6.3.1.4 Effect of receipt

The NCMS may use the received Spare Capacity information for any purpose, similarly as in case of a received C-RRM-RSP (Spare Capacity Report).

14.2.6.3.2 C-RRM-IND (Event_Type = Neighbor-BS Radio Resource Status Update)

14.2.6.3.2.1 Function

This primitive can be used by RRC to inform a Serving BS about the list of Neighbor BSs which are potential HO Target Base Stations for any MS's being served by the SBS, including the information about their radio resource status. This primitive can also be used by RRC in NCMS to enforce a change of the Permutation Zone parameters for a group of BSs. For this purpose, the NCMS may send this C-RRM-IND message to each of the BSs in the group in a synchronized way, thereby informing each BS about i) the Permutation Zone parameters to be used by this BS, and ii) the Permutation Zone Parameters of neighboring BSs, together with an indication about the percentage of still available radio resources in these Permutation Zones. The BS may use this detailed neighbor BS information at the MAC layer for optimized scheduling.

14.2.6.3.2.2 Semantics of the service primitive:

```
C-RRM-IND
    (
    Event_Type: Neighbor-BS Radio Resource Status Update,
    Destination: BS,
    Attribute_List:
        N_NEIGHBORS,
        For all BSs in the BS List:
            BSID,
            N_PERMUTATION_ZONES,
            For all Permutation Zones:
                OFDMA symbol offset,
                Permutation scheme,
                Permutation Zone Subchannels Bitmap,
```

Available Radio Resource,
Radio Resource Fluctuation,
DCD Configuration Change Count,
UCD Configuration Change Count
)

N NEIGHBORS
Number of neighbor BS's

BSID
Unique identifier of BS

N_PERMUTATION_ZONES
Number of radio frame subsections for which the spare capacity will be indicated. A value of 1 indicates that the entire DL and UL radio subframe is considered to be a single permutation zone each, in which case the DL/UL Available Radio Resource indicators cover the full DL and UL radio subframes.

OFDMA symbol offset
Denotes the start of the zone (counting from the frame preamble and starting from 0)

Permutation scheme
Denotes permutation scheme used in current permutation zone. The following types are possible:
- DL PUSC permutation
- DL FUSC permutation
- DL Optional FUSC permutation
- DL AMC
- DL TUSC1
- DL TUSC2
- UL PUSC
- UL AMC

Permutation Zone Subchannel Bitmap
Indicates the subchannels available for transmission in this Permutation Zone at the respective BS.

Available Radio Resource
Percentage of reported average available subchannels and symbols resources per frame. If N_PERMUTATION_ZONES > 1, the indicator covers a permutation zone instead of the entire DL or UL radio subframe.

Radio Resource Fluctuation
Radio Resource Fluctuation is used to indicate the degree of fluctuation in DL and UL channel data traffic throughputs. If N_PERMUTATION_ZONES > 1, the indicator covers a permutation zone instead of the radio frame. When Radio Resource Fluctuation is set to 0, it implies that the DL and UL data traffic is constant in data throughput. Hence, there is no fluctuation in Available Radio Resource. When Radio Resource Fluctuation is set to maximum value 255, the data traffic is very volatile in nature which makes the Available Radio Resource unpredictable. The Radio Resource Fluctuation for all traffic models should be in the range of 0 to 255.

DCD Configuration Change Count
This represents the Neighbor BS current Downlink Channel Descriptor (DCD) configuration change count

UCD Configuration Change Count
This represents the Neighbor BS current Uplink Channel Descriptor (UCD) configuration change count

14.2.6.3.2.3 When generated

The NCMS (BS side) shall use this primitive to forward aggregated Neighbor BS information to each of the BSs which are under control of the NCMS.

14.2.6.3.2.4 Effect of receipt

The BS shall use the information for updating the MOB_NBR-ADV message at the radio interface. In addition the BS may use the information for improving the efficiency of its MAC and PHY functions.

14.2.7 Network entry & exit management

The Network Entry & Exit Management Primitives are a set of primitives for supporting network entry, network re-entry, and network exit procedures between IEEE 802.16 entity and NCMS. Network entry and exit management uses the Service Flow Management Services in the NCMS. The exception are the neighbor BS update primitives which use the Mobility Management Services.

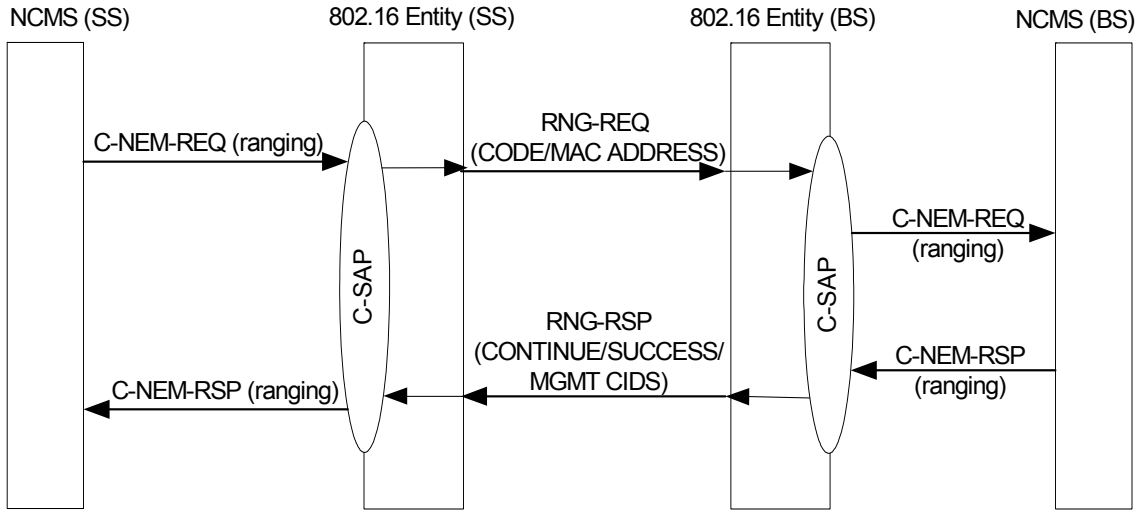

Figure 366—Ranging Primitives

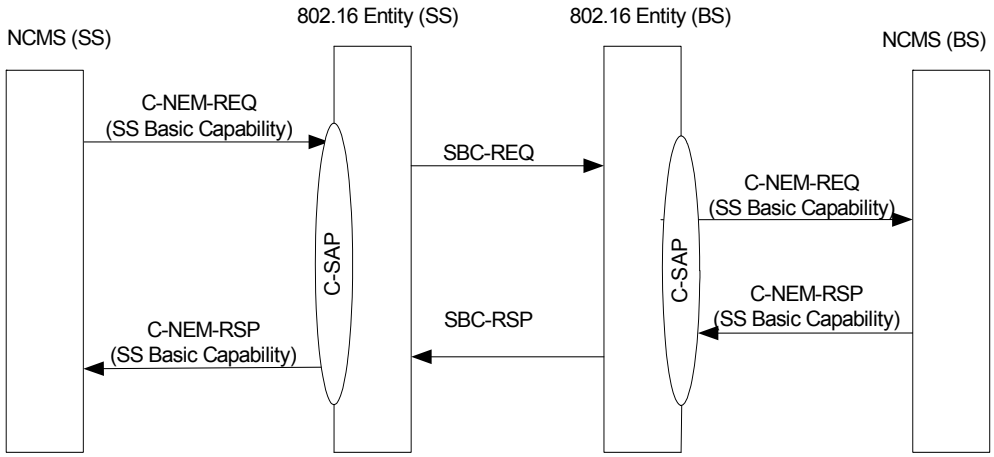

Figure 367—SS Basic Capability Negotiation Primitives

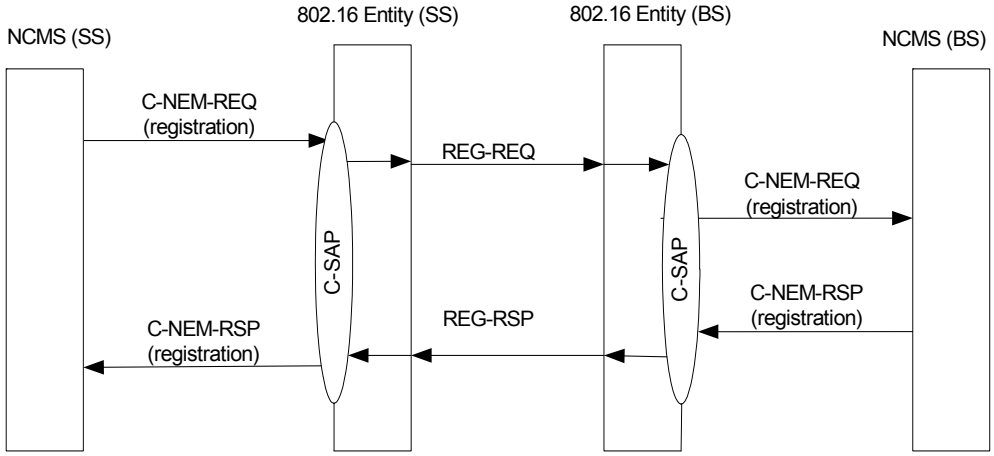

Figure 368—Registration Primitives (SS and BS)

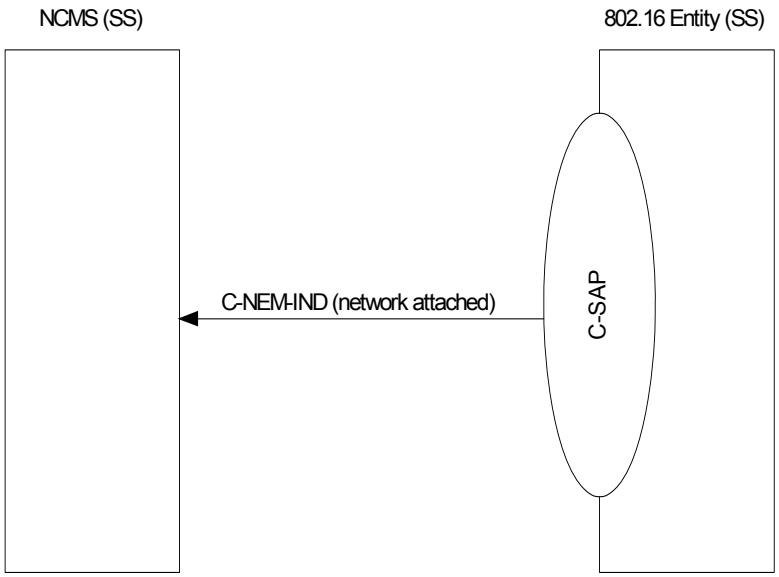

Figure 369—Network Attachment

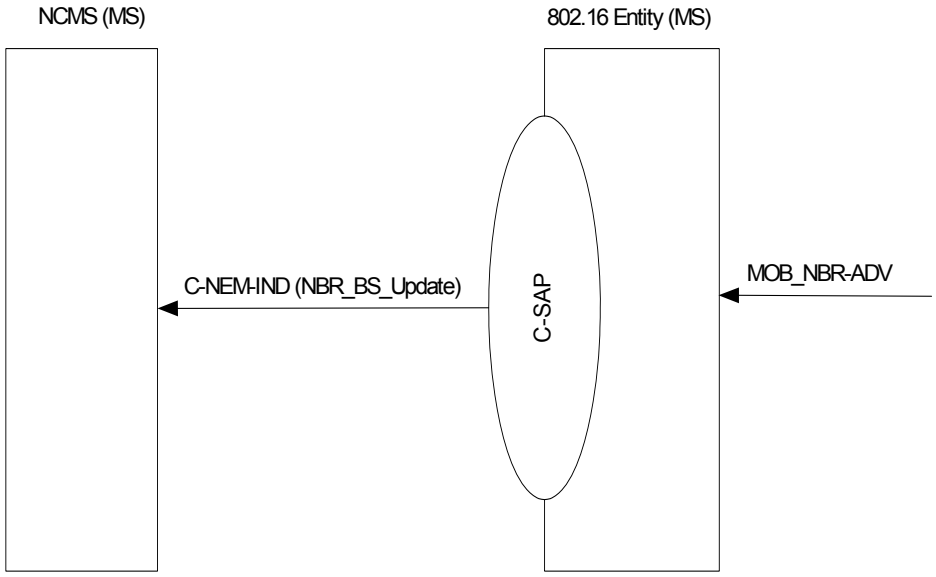

Figure 370—IEEE 802.16 entity (MS) and NCMS primitives when MOB_NBR-ADV message is received

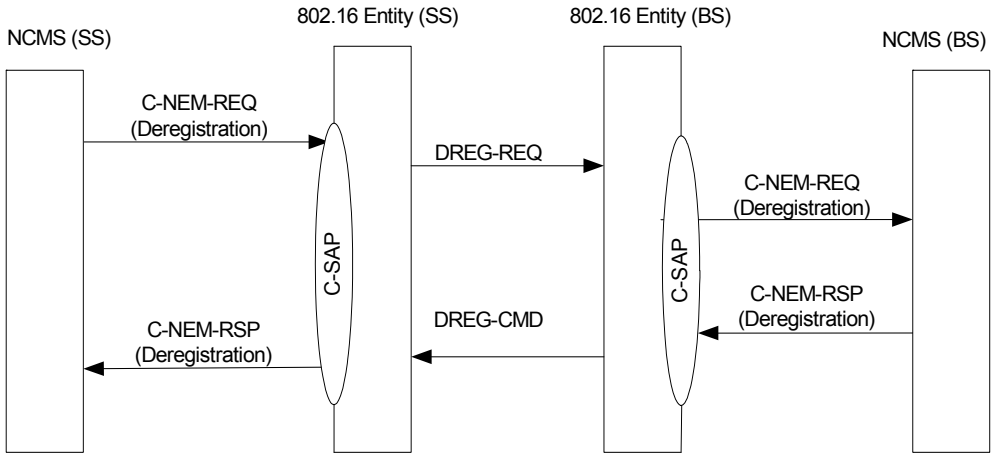

Figure 371—Network Deregistration Primitives by SS

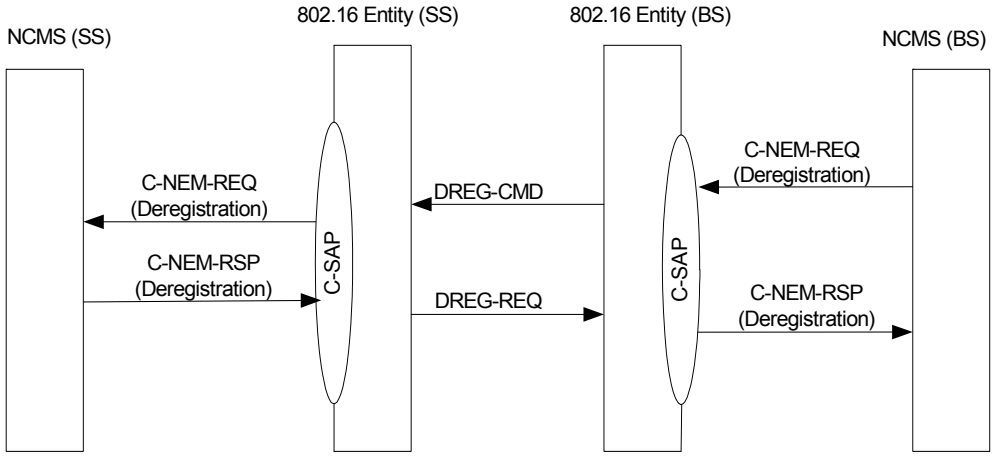

Figure 372—Network Deregistration Primitives by BS

14.2.7.1 C-NEM-REQ

This primitive is used by the NCMS or the IEEE 802.16 entity to control ranging or registration network entry procedures. The Action_Type included in this primitive defines the type of network entry procedures to be performed. The possible Action_Types for this primitive are listed in table below:

Action type	Description
Ranging	Ranging procedures between IEEE 802.16 entity and NCMS
SS Basic Capability	SS Basic Capability negotiation procedures between IEEE 802.16 entity and NCMS
Registration	Registration procedures between IEEE 802.16 entity and NCMS
Deregistration	Deregistration procedures between IEEE 802.16 entity and NCMS

14.2.7.1.1 C-NEM-REQ (Action_Type = Ranging)

14.2.7.1.1.1 SS side

14.2.7.1.1.1.1 Function

This primitive requests ranging. Upper layer management entities in NCMS shall request ranging by sending this primitive to the SS.

14.2.7.1.1.1.2 Semantics:

C-NEM-REQ
(
Operation_Type: Action,
Action_Type: Ranging,
Destination: SS,
Attribute_List:
Ranging Type
)

Ranging Type
This identifies the ranging type; value range:
Initial,
Handoff,
Periodic

14.2.7.1.1.1.3 When generated

This primitive is generated by the upper layer management entities to initiate ranging procedure for initial network entry, network re-entry after handover and periodic ranging.

14.2.7.1.1.1.4 Effect of receipt

MAC layer shall generate CDMA code or RNG-REQ MAC management message including corresponding TLVs depending on the Ranging type and RNG-REQ message shall be sent to the BS over the air interface.

14.2.7.1.1.2 BS side

14.2.7.1.1.2.1 Function

This primitive notifies the upper layer management entity in the BS that the mobile terminal requests ranging with RNG-REQ.

14.2.7.1.1.2.2 Semantics:

C-NEM-REQ
(
Operation_Type: Action,
Action_Type: Ranging,
Destination: NCMS,
Attribute_List:
SS Address,
MAC Version,
Required Downlink Burst Profile,
Serving BSID,
HO Indication
)

SS Address
MAC Address of SS that requests ranging
MAC Version
MAC version supported by SS; value range:
IEEE Std 802.16-2001,
IEEE Std 802.16-2004,
IEEE Std 802.16e-2005,
IEEE Std 802.16g-2007
Required Downlink Burst Profile
DIUC value of Downlink Burst Profile
Serving BSID
Serving BSID during ranging
HO Indication
This parameter indicates the SS is currently attempting to HO; value range:
NULL,
HO,
Fast HO,
Entry from Idle Mode

14.2.7.1.1.2.3 When generated

This primitive is generated by MAC layer when MAC layer receives RNG-REQ message over the air interface.

14.2.7.1.1.2.4 Effect of receipt

Upon receipt ranging indication, C-NEM-RSP is generated

14.2.7.1.2 C-NEM-REQ (Action_Type = SS Basic Capability)

14.2.7.1.2.1 Function

This primitive is initiated by the upper layer entity to request SBC (SS Basic Capability).

14.2.7.1.2.2 Semantics:

C-NEM-REQ
(
Operation_Type: Action,
Action_Type: SS Basic Capability,
Destination: SS or NCMS,
Attribute_List:
SS MAC Address,
Authorization Policy,
Service Information Query (SIQ)
)

SS MAC Address
48-bit MAC Address which identify SS.

Authorization Policy
Enumerated type which indicates authorization policy used by SS and BS. The value can be assigned to No Authorization, Only EAP-based authorization, Only RSA-based authorization, or EAP-based authorization after RSA-based authorization.

Service Information Query
1-Byte Service Information Query to request the Service Network Provider Identifiers supported by the Operator Network that includes the current BS.

14.2.7.1.2.3 When generated

— NCMS to IEEE 802.16 entity (SS): This primitive is generated by NCMS at SS after receiving ranging response message.
— IEEE 802.16 entity (BS) to NCMS: This primitive is also generated by BS when the BS receives SBC-REQ message over the air interface.

14.2.7.1.2.4 Effect of receipt

— NCMS to IEEE 802.16 entity (SS): The IEEE 802.16 entity (SS) generates SBC-REQ MAC message when it receives C-NEM-REQ(SS Basic Capability).
— IEEE 802.16 entity (BS) to NCMS: The NCMS at BS processes the information from this primitive and shall generate C-NEM-RSP(SS Basic Capability).

14.2.7.1.3 C-NEM-REQ (Action_Type = Registration)

14.2.7.1.3.1 SS side

14.2.7.1.3.1.1 Function

This primitive is initiated by the upper layer entity to request registration.

14.2.7.1.3.1.2 Semantics:

C-NEM-REQ

(
Operation_Type: Action,
Action_Type: Registration,
Destination: SS,
Attribute_List:
IP management mode,
IP Version,
Method of Allocating IP Address,
Previous IP Address
)

IP Management Mode
The IP management mode parameter dictates whether the provider intends to manage the SS on an ongoing basis via IP-based mechanisms; value range:
Unmanaged mode,
IP-managed mode

IP Version
IP version

Method of Allocating IP Address
IP Address Configuration method; value range:
DHCPv4,
Mobile IPv4,
DHCPv6,
Mobile IPv6,
IPv6 stateless address auto configuration

Previous IP Address
Previously assigned IP Address of SS on the secondary management connection. If not previously assigned, the value is 0.

14.2.7.1.3.1.3 When generated

This primitive is generated when upper layer entity requests registration

14.2.7.1.3.1.4 Effect of receipt

REG-REQ message including necessary TLV parameter is sent

14.2.7.1.3.2 BS side

14.2.7.1.3.2.1 Function

This primitive notifies that upper layer entity requests registration

14.2.7.1.3.2.2 Semantics:

C-NEM-REQ
(
Operation_Type: Action,
Action_Type: Registration,
Destination: NCMS,
Attribute_List:
IP management mode,
IP Version,

Method of Allocating IP Address,
Previous IP Address
)

IP Management Mode
The IP management mode parameter dictates whether the provider intends to manage the SS on an ongoing basis via IP-based mechanisms; value range:
Unmanaged mode,
IP-managed mode

IP Version
IP version

Method of Allocating IP Address
IP Address Configuration method; value range:
DHCPv4,
Mobile IPv4,
DHCPv6,
Mobile IPv6,
IPv6 stateless address auto configuration

Previous IP Address
Previously assigned IP Address of SS on the secondary management connection. If not previously assigned, the value is 0.

14.2.7.1.3.2.3 When generated

This primitive is generated when IEEE 802.16 entity (BS) receives REG-REQ message.

14.2.7.1.3.2.4 Effect of receipt

The NCMS shall respond to this primitive with C-NEM-RSP (Registration) primitive.

14.2.7.1.4 C-NEM-REQ (Action_Type = Deregistration)

14.2.7.1.4.1 Function

This primitive is used by NCMS at SS side to trigger the deregistration procedure. In this case, IEEE 802.16 entity at BS notifies NCMS of deregistration request when it receives DREG-REQ message from the SS. This primitive is also used by NCMS at BS side to trigger deregistration procedure. It is also used by the IEEE 802.16 entity at SS to notify NCMS of deregistration request when it receives DREG-CMD message from the BS.

14.2.7.1.4.2 Semantics:

C-NEM-REQ
(
Operation_Type: Action,
Action_Type: Deregistration,
Destination: SS, BS or NCMS,
Attribute_List:
SS MAC Address,
Action Code
)

SS MAC Address

48-bit MAC Address which identifies SS.

Action Code

Indication of deregistration type.

14.2.7.1.4.3 When generated

— NCMS(SS) to IEEE 802.16 entity (SS):
This primitive is generated when a higher layer entity in NCMS at SS wants to de-register the service from IEEE 802.16 networks. It is also generated by the IEEE 802.16 entity (BS) to notify NCMS of deregistration request when it receives DREG-REQ message from the SS.

— NCMS(BS) to IEEE 802.16 entity (BS):
This primitive is generated when a higher layer entity in NCMS at BS wants to de-register the service from IEEE 802.16 networks. It is also generated by the IEEE 802.16 SS entity to notify NCMS of deregistration request when it receives DREG-CMD message from the BS.

14.2.7.1.4.4 Effect of receipt

— NCMS(SS) to IEEE 802.16 entity (SS):
The IEEE 802.16 entity at SS shall send DREG-REQ message to the serving BS for de-registration. Action code included in DREG-REQ message corresponds to the Action Code in C-NEM-REQ primitive. If NCMS at BS receives this primitive, it shall responds to it with C-NEM-RSP primitive after deregistration process.

— NCMS(BS) to IEEE 802.16 entity (BS):
The IEEE 802.16 entity at BS shall send DREG-CMD message to the SS for de-registration. Action code included in DREG-CMD message corresponds to the Action Code in C-NEM-REQ primitive. If NCMS at SS receives this primitive, it shall responds to it with C-NEM-RSP primitive after deregistration process.

14.2.7.2 C-NEM-RSP

This primitive is used by the NCMS or the IEEE 802.16 entity in response to ranging or registration request in network entry procedures. The Action_Type included in this primitive defines the type of network entry procedures to be performed. The possible Action_Type for this primitive are listed in table below:

Action type	Description
Ranging	Ranging procedures between IEEE 802.16 entity and NCMS
SS Basic Capability	SS Basic Capability negotiation procedures between IEEE 802.16 entity and NCMS
Registration	Registration procedures between IEEE 802.16 entity and NCMS
Deregistration	Deregistration procedures between IEEE 802.16 entity and NCMS

14.2.7.2.1 C-NEM-RSP (Action_Type = Ranging)

14.2.7.2.1.1 BS side

14.2.7.2.1.1.1 Function

This primitive returns the result of ranging request.

14.2.7.2.1.1.2 Semantics:

C-NEM-RSP
(
Operation_Type: Action,
Action_Type: Ranging,
Destination: BS,
Attribute_List:
SS Address,
Result Code,
Resource Retain Flag,
HO Process Optimization
)

SS Address
MAC Address of SS that requests ranging
Result Code
Result of ranging request; value range:
Failed,
Succeed
Resource Retain Flag
Indicates whether the serving BS will retain or delete the connection information of the SS during HO
HO Process Optimization
Network re-entry process optimization after handover

14.2.7.2.1.1.3 When generated

This primitive is generated when decided to notify the ranging result after receiving ranging request.

14.2.7.2.1.1.4 Effect of receipt

MAC layer sends RNG-RSP message.

14.2.7.2.1.2 SS side

14.2.7.2.1.2.1 Function

This primitive notifies the result of ranging to upper layer entity.

14.2.7.2.1.2.2 Semantics:

C-NEM-RSP
(
Operation_Type: Action,

Action_Type: Ranging,
Destination: NCMS,
Attribute_List:
SS Address,
Result Code,
Resource Retain Flag,
HO Process Optimization
)

SS Address
MAC Address of SS that requests ranging
Result Code
Result of ranging request; value range:
Failed,
Succeed
Resource Retain Flag
Indicates whether the serving BS will retain or delete the connection information of the SS during HO
HO Process Optimization
Network re-entry process optimization after handover

14.2.7.2.1.2.3 When generated

This primitive is generated when MAC layer receives RNG-RSP message.

14.2.7.2.1.2.4 Effect of receipt

The upper layer entity receives the result of ranging.

14.2.7.2.2 C-NEM-RSP (Action_Type = SS Basic Capability)

14.2.7.2.2.1 Function

This primitive is returned by the result of SS Basic Capability request.

14.2.7.2.2.2 Semantics:

C-NEM-RSP
(
Operation_Type: Action,
Action_Type: SS Basic Capability,
Destination: BS or NCMS,
Attribute_List:
SS MAC Address,
Authorization Policy,
NSP List,
NSP Change Count
)

SS MAC Address
48-bit MAC Address which identifies SS.
Authorization Policy

Enumerated type which indicates authorization policy used by SS and BS. The value can be assigned to No Authorization, Only EAP-based authorization, Only RSA-based authorization, EAP-based authorization after RSA-based authorization.

NSP List

One or more 24-bit Network Service Provider Identifiers.

NSP Change Count

1-Byte NSP Change Count which indicates a change of the NSP list. It will be increased by one (modulo 256) whenever the NSP list changes.

14.2.7.2.2.3 When generated

— NCMS(BS) to IEEE 802.16 entity (BS):
This primitive is generated to respond to C-NEM-REQ(SS Basic Capability) from BS.

— IEEE 802.16 entity (SS) to NCMS(SS):
This primitive is generated by the SS when the SS receives SBC-RSP MAC message.

14.2.7.2.2.4 Effect of receipt

— NCMS(BS) to IEEE 802.16 entity (BS):
The IEEE 802.16 entity (BS) sends a SBC-RSP message to SS.

— IEEE 802.16 entity (SS) to NCMS(SS):
The NCMS(SS) receives SS basic capability results.

14.2.7.2.3 C-NEM-RSP (Action_Type = Registration)

14.2.7.2.3.1 BS side

14.2.7.2.3.1.1 Function

This primitive returns the result of registration request.

14.2.7.2.3.1.2 Semantics:

C-NEM-RSP

```
(
Operation_Type: Action,
Action_Type: Registration,
Destination: BS,
Attribute_List:
    IP management mode,
    IP Version,
    Method of Allocating IP Address,
    Skip IP Address Acquisition
)
```

IP Management Mode

The IP management mode parameter dictates whether the provider intends to manage the SS on an ongoing basis via IP-based mechanisms; value range:

Unmanaged mode,
IP-managed mode

IP Version

IP version; value range:

IPv4,
IPv6

Method of Allocating IP Address

IP Address Configuration method; value range:

DHCPv4,
Mobile IPv4,
DHCPv6,
Mobile IPv6,
IPv6 stateless address auto configuration

Skip IP Address Acquisition

This indicates to an SS whether it should reacquire its IP address on the secondary management connection and related context or reuse its prior context; value range:

No IP address change,
Re-acquire IP address

14.2.7.2.3.1.3 When generated

This primitive is generated to notify the result of registration after C-NEM-REQ(Registration) is received at the BS.

14.2.7.2.3.1.4 Effect of receipt

MAC layer sends REG-RSP message.

14.2.7.2.3.2 SS side

14.2.7.2.3.2.1 Function

This primitive notifies the registration result from C-NEM-RSP to upper layer entity

14.2.7.2.3.2.2 Semantics:

C-NEM-RSP

```
(
Operation_Type: Action,
Action_Type: Registration,
Destination: NCMS,
Attribute_List:
    IP management mode,
    IP Version,
    Method of Allocating IP Address,
    Skip Address Acquisition
)
```

IP Management Mode

The IP management mode parameter dictates whether the provider intends to manage the SS on an ongoing basis via IP-based mechanisms; value range:

Unmanaged mode,
IP-managed mode

IP Version

IP version; value range:

IPv4,
IPv6

Method of Allocating IP Address

IP Address Configuration method; value range:

DHCPv4,
Mobile IPv4,
DHCPv6,
Mobile IPv6,
IPv6 stateless address auto configuration

Skip IP Address Acquisition

This indicates to an SS whether it should reacquire its IP address on the secondary management connection and related context or reuse its prior context; value range:

No IP address change,
Re-acquire IP address

14.2.7.2.3.2.3 When generated

This primitive is generated when REG-RSP is received by the SS

14.2.7.2.3.2.4 Effect of receipt

Registration result is notified to the upper layer entity

14.2.7.2.4 C-NEM-RSP (Action_Type = Deregistration)

14.2.7.2.4.1 Function

This primitive is generated by the IEEE 802.16 entity (SS) or NCMS to respond to C-NEM-REQ(Deregistration). It is also generated by the IEEE 802.16 entity (BS) or NCMS to respond to C-NEM-REQ(Deregistration).

14.2.7.2.4.2 Semantics:

C-NEM-RSP

(
Operation_Type: Action,
Action_Type: Deregistration,
Destination: SS, BS or NCMS,
Attribute_List:
SS MAC Address,
Action Code
)

SS MAC Address

48-bit MAC Address which identifies SS.

Action Code

Indication of deregistration type.

14.2.7.2.4.3 When generated

— NCMS(BS) to IEEE 802.16 entity (BS):
This primitive is generated when the IEEE 802.16 entity (BS) receives C-NEM-REQ(Deregistration).
— IEEE 802.16 entity (SS) to NCMS(SS):
This primitive is generated to by the SS receives DREG-CMD.
— NCMS(SS) to IEEE 802.16 entity (SS):

This primitive is generated when the IEEE 802.16 entity (MS) receives C-NEM-REQ(Deregistration).

— IEEE 802.16 entity (BS) to NCMS(BS):
This primitive is generated to by the BS receives DREG-REQ.

14.2.7.2.4.4 Effect of receipt

— NCMS(BS) to IEEE 802.16 entity (BS):
The BS shall send DREG-CMD message to the SS.
— IEEE 802.16 entity (SS) to NCMS(SS):
The NCMS(SS) completes deregistration procedure.
— NCMS(SS) to IEEE 802.16 entity (SS):
The MS shall send DREG-REQ message to the BS.
— IEEE 802.16 entity (BS) to NCMS(BS):
The NCMS(SS) completes deregistration procedure.

14.2.7.3 C-NEM-IND (Event_Type = NBR_BS_Update)

14.2.7.3.1 Function

This primitive is generated by the MS to notify the NCMS about the reception of a neighbor advertisement (MOB_NBR-ADV) message from the serving BS.

14.2.7.3.2 Semantics:

C-NEM-IND
(
Event_Type: NBR_BS_Update,
Destination: NCMS,
Attribute_list:
Operator ID,
N_Neighbors,
Neighbor BSID,
HO Process Optimization,
DCD/UCD information
)

Operator ID
Identifier of the network provider
N_Neighbors
The count of the unique combination of Neighbor BSID, HO Process Optimization and DCD/UCD information
Neighbor BSID
Base Station ID
HO Process Optimization
Network re-entry process optimization after handover; bitmap:
Bit 0: Omit SBC-REQ/RSP management messages during re-entry processing
Bit 1: Omit PKM Authentication phase except TEK phase during re-entry processing
Bit 2: Omit PKM TEK creation phase during re-entry processing
Bit 3: Omit REG-REQ/RSP management messages during re-entry processing
Bit 4: Omit Network Address Acquisition management messages during re-entry processing
Bit 5: Omit Time of Day Acquisition management messages during re-entry processing
Bit 6: Omit TFTP management messages during re-entry processing

Bit 7: MS state information (see 11.14).

14.2.7.3.3 When generated

This primitive is generated by the MS to notify the NCMS of MOB_NBR-ADV contents received from the Serving BS.

14.2.7.3.4 Effect of receipt

Upper layer entity acquires information of neighboring BSs.

14.2.7.4 C-NEM-IND (Event_Type = network attached)

14.2.7.4.1 Function

This primitive is used by SS to inform NCMS(SS) of the completion of initialization procedure which includes synchronization with the BS and acquirement of downlink/uplink transmission parameters.

14.2.7.4.2 Semantics of the service primitive:

C-NEM-IND
(
Event_Type (network attached),
Destination (NCMS),
Attribute_list:
BSID
)

BSID
Unique identifier of BS

14.2.7.4.3 When generated

This primitive is generated when the SS completes initialization steps and is ready to perform initial ranging.

14.2.7.4.4 Effect of receipt

NCMS can issue C-NEM-REQ (ranging) to request the SS to perform initial ranging after it receives this primitive.

14.2.8 Subscriber Station Management

The Subscriber Station Management Primitives are a set of primitives to manage the status of subscriber station. A management entity in the NCMS can change the status of mobile terminal into power on/down etc. Those primitives are also used to notify the NCMS of information or events which are related with the status of the mobile terminal.

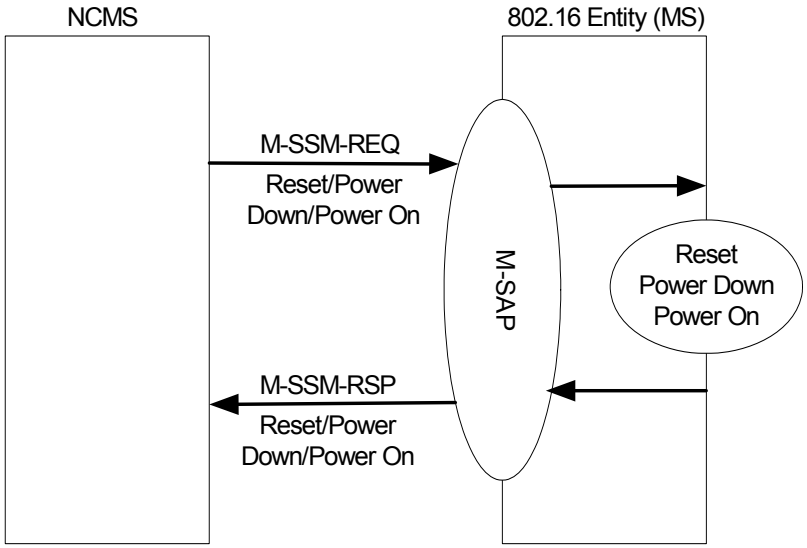

Figure 373—M-SSM primitives flow for Reset / Power On / Power Down at SS side

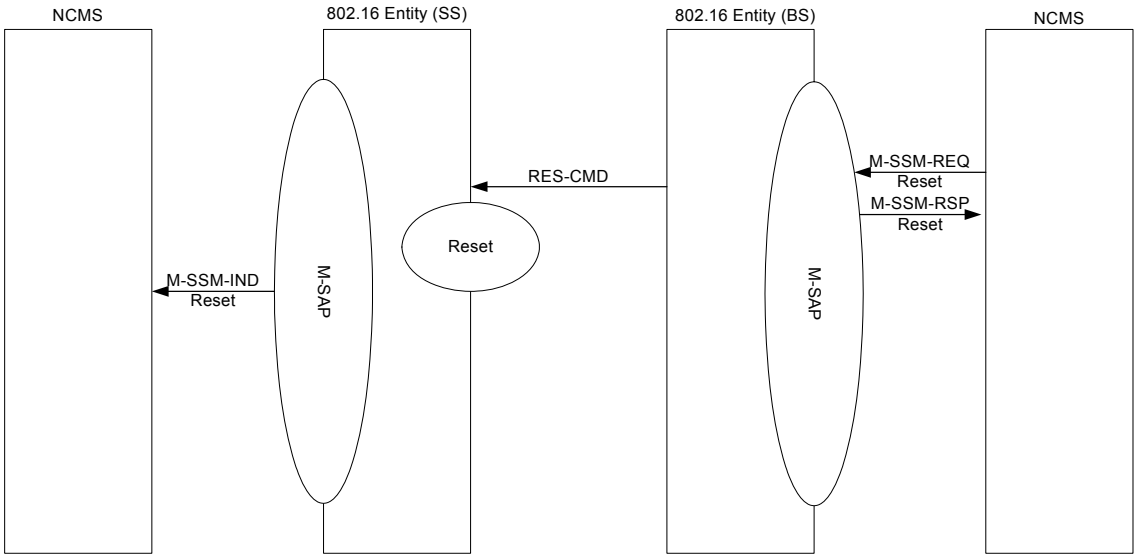

Figure 374—M-SSM primitives flow for Reset

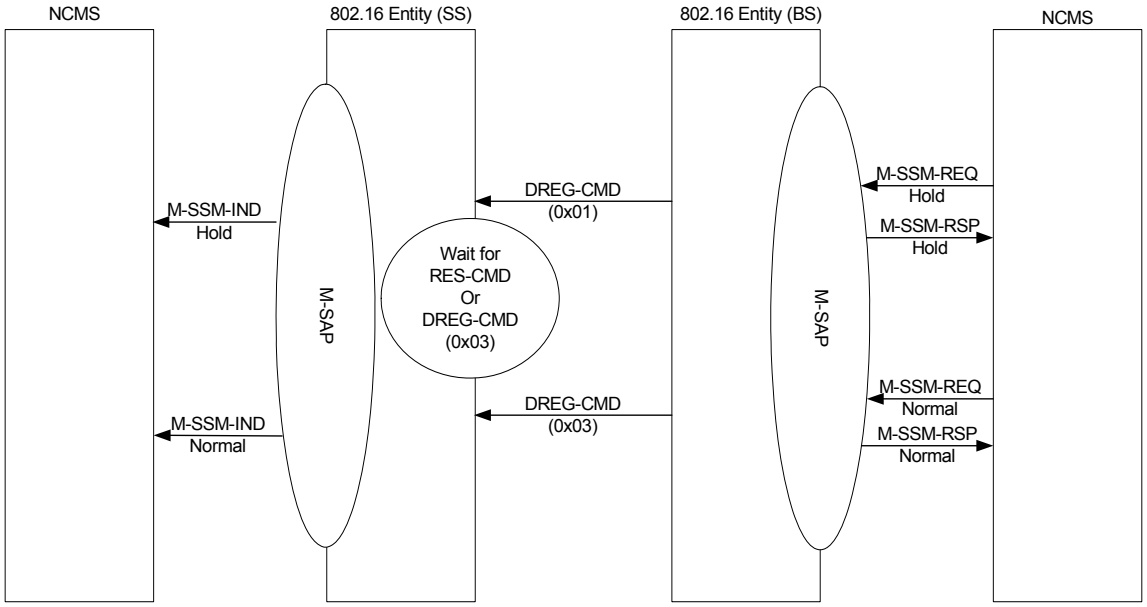

Figure 375—M-SSM primitives flow for Hold and Normal resumption

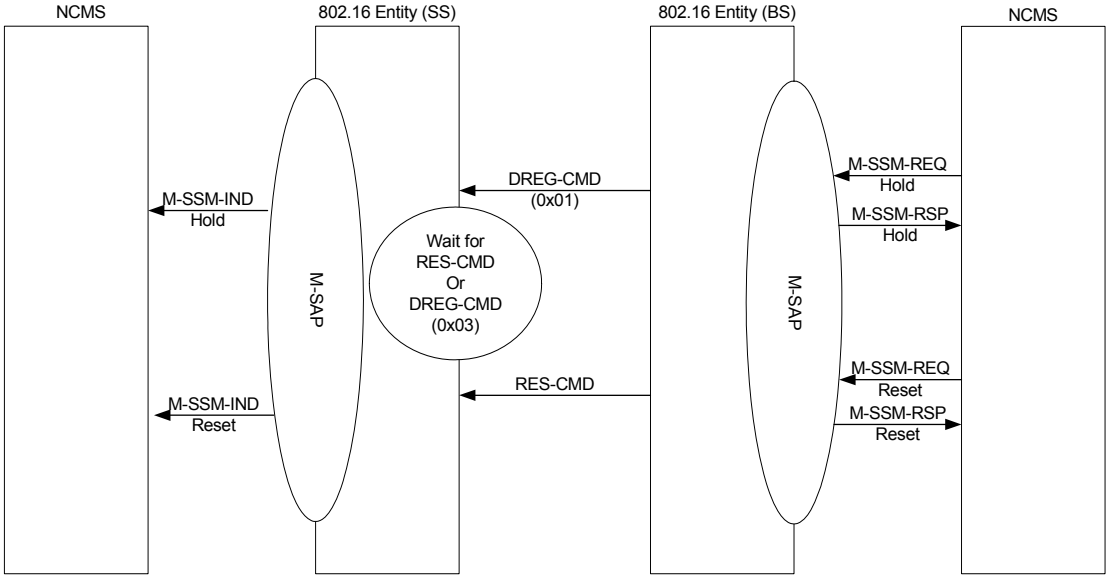

Figure 376—M-SSM primitives flow for Hold and Reset

14.2.8.1 M-SSM-REQ

This primitive is used by NCMS or IEEE 802.16 entity to request status change of the MS. The Action_Type included in this primitive defines the type of status change to be performed. The possible Action_Type for this primitive are listed in table below:

Action type	Description
Power Down	Power down procedure between MS and NCMS
Reset	Reset procedure
Hold	Change of the current status to the hold status
Normal	Change of the current status to the normal status

14.2.8.1.1 M-SSM-REQ (Action_Type = Power On)

14.2.8.1.1.1 Function

This primitive is used by the NCMS to change the status of the SS to Power On. This primitive is only used by the NCMS at SS side.

14.2.8.1.1.2 Semantics of the service primitive:

The following parameters are included in this primitive.

M-SSM-REQ
(
Operation_Type: Action,
Action_Type: Power On,
Destination: SS,
Attribute_List:
)

14.2.8.1.1.3 When generated

This primitive is generated when a higher layer entity in NCMS wants to request the IEEE 802.16 entity (SS) to power itself on.

14.2.8.1.1.4 Effect of receipt

The IEEE 802.16 entity at the SS performs power on procedure and responds with the M-SSM-RSP primitive.

14.2.8.1.2 M-SSM-REQ (Action_Type = Power Down)

14.2.8.1.2.1 Function

This primitive is used by NCMS to change the status of SS to Power Down. This primitive is only used by NCMS at SS side.

14.2.8.1.2.2 Semantics of the service primitive:

The following parameters are included in this primitive.

M-SSM-REQ
(
Operation_Type: Action,
Action_Type: Power Down,
Destination: SS
)

14.2.8.1.2.3 When generated

This primitive is generated when a higher layer entity in NCMS wants to request the IEEE 802.16 entity (SS) to power down.

14.2.8.1.2.4 Effect of receipt

The IEEE 802.16 entity in SS performs power down procedure

14.2.8.1.3 M-SSM-REQ (Action_Type = Reset)

14.2.8.1.3.1 Function

This primitive is used by NCMS at SS or BS to reset the SS.

14.2.8.1.3.2 Semantics of the service primitive:

The following parameters are included in this primitive.

M-SSM-REQ
(
Operation_Type: Action,
Action_Type: Reset,
Destination: SS or BS,
Attribute_list:
SS MAC Address,
Reset Code
)

SS MAC Address
SS Identifier
Reset Code
Reason for reset

14.2.8.1.3.3 When generated

This primitive is generated when a higher layer entity in NCMS wants to reset the SS.

14.2.8.1.3.4 Effect of receipt

If the IEEE 802.16 entity (SS) receives this primitive, it shall respond to the request with M-SSM-RSP primitive and shall re-initialize its MAC. After reset procedure is completed, the IEEE 802.16 SS entity shall notify the NCMS of the completion of reset procedure using M-SSM-IND (Reset) primitive. If the IEEE

802.16 entity (BS) receives this primitive, it shall send RES-CMD message to the SS and respond to the request with M-SSM-RSP (Reset) primitive.

14.2.8.1.4 M-SSM-REQ (Action_Type = Hold)

14.2.8.1.4.1 Function

This primitive is used by NCMS at BS to change the status of the SS from Normal to Hold status. This primitive is used only by the NCMS at BS side.

14.2.8.1.4.2 Semantics of the service primitive:

The following parameters are included in this primitive.

M-SSM-REQ
(
Operation_Type: Action,
Action_Type: Hold,
Destination: BS,
Attribute_list:
SS MAC Address,
)

SS MAC Address
SS Identifier

14.2.8.1.4.3 When generated

This primitive is generated when NCMS at BS side wants to change the status of the SS from Normal to Hold status.

14.2.8.1.4.4 Effect of receipt

The BS sends DREG-CMD message with action code = 0x01 to the SS and responds to the request with M-SSM-RSP (Hold) primitive.

14.2.8.1.5 M-SSM-REQ (Action_Type = Normal)

14.2.8.1.5.1 Function

This primitive is used by NCMS at BS to change the status of the SS to Normal status. This primitive is used only by the NCMS at BS side.

14.2.8.1.5.2 Semantics of the service primitive:

The following parameters are included in this primitive.

M-SSM-REQ
(
Operation_Type: Action,
Action_Type: Normal,
Destination: BS,
Attribute_list:
SS MAC Address,

)

SS MAC Address
SS Identifier

14.2.8.1.5.3 When generated

This primitive is generated when NCMS at BS side wants to change the status of the SS from Hold to Normal status.

14.2.8.1.5.4 Effect of receipt

The BS sends DREG-CMD message with action code = 0x03 to the SS and responds to the request with M-SSM-RSP (Normal) primitive.

14.2.8.2 M-SSM-RSP

This primitive is used by a IEEE 802.16 entity or NCMS to respond to a subscriber station management request. The Action type included in this primitive defines the type of management procedure to be performed. The possible Action_Types for this primitive are listed in the table below:

Action type	Description
Power On	Power on procedure between SS and NCMS
Power Down	Power down procedure between SS and NCMS
Reset	Reset procedure
Hold	Change of the current status to the hold status
Normal	Change of the current status to the normal status

14.2.8.2.1 M-SSM- RSP (Action_Type = Power On)

14.2.8.2.1.1 Function

This primitive is generated by the IEEE 802.16 entity to respond to M-SSM-REQ (Power On). This primitive is only used by NCMS at SS side.

14.2.8.2.1.2 Semantics of the service primitive:

The following parameters are included in this primitive.

M-SSM-RSP
(
Operation_Type: Action,
Action_Type: Power On,
Destination: NCMS,
Attribute_list:
Result Code
)

14.2.8.2.1.3 When generated

This primitive is generated when the IEEE 802.16 entity (SS) receives M-SSM-REQ (Power On) primitive from NCMS.

14.2.8.2.1.4 Effect of receipt

NCMS completes power-on procedure.

14.2.8.2.2 M-SSM- RSP (Action_Type = Power Down)

14.2.8.2.2.1 Function

This primitive is generated by the IEEE 802.16 entity to respond to M-SSM-REQ (Power Down). This primitive is only used by NCMS at SS side.

14.2.8.2.2.2 Semantics of the service primitive:

The following parameters are included in this primitive.

```
M-SSM-RSP
    (
    Operation_Type: Action,
    Action_Type: Power Down,
    Destination: NCMS,
    Attribute_list:
        Result Code
    )
```

14.2.8.2.2.3 When generated

This primitive is generated when the IEEE 802.16 entity (SS) receives M-SSM-REQ (Power Down) primitive from NCMS.

14.2.8.2.2.4 Effect of receipt

NCMS completes power-down procedure.

14.2.8.2.3 M-SSM- RSP (Action_Type = Reset)

14.2.8.2.3.1 Function

This primitive is generated by the IEEE 802.16 entity to respond to M-SSM-REQ (Reset).

14.2.8.2.3.2 Semantics of the service primitive:

The following parameters are included in this primitive.

```
M-SSM-RSP
    (
    Operation_Type: Action,
    Action_Type: Reset,
    Destination: NCMS,
    Attribute_list:
```


Result Code
)

14.2.8.2.3.3 When generated

This primitive is generated when the IEEE 802.16 entity (SS) receives M-SSM-REQ (Reset) primitive from NCMS.

14.2.8.2.3.4 Effect of receipt

NCMS completes reset procedure.

14.2.8.2.4 M-SSM-RSP (Action_Type = Hold)

14.2.8.2.4.1 Function

This primitive is used by BS to respond to M-SSM-REQ (Hold) primitive. This primitive is used only by the BS.

14.2.8.2.4.2 Semantics of the service primitive:

The following parameters are included in this primitive.

M-SSM-RSP
(
Operation_Type: Action,
Action_Type: Hold,
Destination: NCMS,
Attribute_list:
SS MAC Address,
)

SS MAC Address
SS Identifier

14.2.8.2.4.3 When generated

This primitive is generated when the BS receives M-SSM-REQ (Hold) primitive form the NCMS and sends DREG-CMD message with action code = 0x01 to the SS.

14.2.8.2.4.4 Effect of receipt

The NCMS recognizes that the status of the SS has been changed to Hold status.

14.2.8.2.5 M-SSM-RSP (Action_Type = Normal)

14.2.8.2.5.1 Function

This primitive is used by BS to respond to M-SSM-REQ (Normal) primitive. This primitive is used only by the BS.

14.2.8.2.5.2 Semantics of the service primitive:

The following parameters are included in this primitive.

M-SSM-REQ
(
Operation_Type: Action,
Action_Type: Normal,
Destination: NCMS,
Attribute_list:
SS MAC Address,
)

SS MAC Address
SS Identifier

14.2.8.2.5.3 When generated

This primitive is generated when the BS receives M-SSM-REQ (Normal) primitive form the NCMS and sends DREG-CMD message with action code = 0x03 to the SS.

14.2.8.2.5.4 Effect of receipt

The NCMS recognizes that the status of the SS has changed to Normal status.

14.2.8.3 M-SSM-IND

This primitive is used by the IEEE 802.16 entity at SS to notify NCMS of some events. The possible event types for this primitive are listed in table below:

Event type	Description
Reset	Notification of reset event
Hold	Notification of status change to Hold status
Normal	Notification of status change to Normal status

14.2.8.3.1 M-SSM-IND (Event_Type = Reset)

14.2.8.3.1.1 Function

This primitive is generated by the IEEE 802.16 entity (SS) to notify the NCMS at SS side of a reset event. This primitive is used only by the SS.

14.2.8.3.1.2 Semantics of the service primitive:

The following parameters are included in this primitive.

M-SSM-IND
(
Event_Type: Reset,
Destination: NCMS,

Attribute_list:
SS MAC Address
)

SS MAC Address
SS Identifier

14.2.8.3.1.3 When generated

This primitive is generated when the IEEE 802.16 entity at SS receives RES-CMD message from the BS. The IEEE 802.16 entity issues this primitive after internal reset procedure.

14.2.8.3.1.4 Effect of receipt

NCMS performs internal reset procedure and initialization of the IEEE 802.16 entity.

14.2.8.3.2 M-SSM-IND (Event_Type = Hold)

14.2.8.3.2.1 Function

This primitive is generated by the IEEE 802.16 entity (SS) to notify the NCMS at SS side of a hold event. This primitive is used only by the SS.

14.2.8.3.2.2 Semantics of the service primitive:

The following parameters are included in this primitive.

M-SSM-IND
(
Event_Type: Hold,
Destination: NCMS,
Attribute_list:
SS MAC Address
)

SS MAC Address
SS Identifier

14.2.8.3.2.3 When generated

This primitive is generated when the IEEE 802.16 entity at SS receives DREG-CMD message with action code = 0x01 from the BS.

14.2.8.3.2.4 Effect of receipt

NCMS waits for the next M-SSM-IND primitive with Action_Type = Normal or Reset.

14.2.8.3.3 M-SSM-IND (Event_Type = Normal)

14.2.8.3.3.1 Function

This primitive is generated by the IEEE 802.16 entity (SS) to notify the NCMS at SS side of a normal event. This primitive is used only by the SS.

14.2.8.3.3.2 Semantics of the service primitive:

The following parameters are included in this primitive.

M-SSM-IND
(
Event_Type: Normal,
Destination: NCMS,
Attribute_list:
SS MAC Address
)

14.2.8.3.3.3 When generated

This primitive is generated when the IEEE 802.16 entity at SS receives DREG-CMD message with action code = 0x03 from the BS. The IEEE 802.16 entity issues this primitive after it changes its status to Normal status.

14.2.8.3.3.4 Effect of receipt

NCMS returns back to the normal status.

14.2.9 QoS management

The Service Flow Management Primitives are a set of primitives for supporting QoS management between SS or BS and the Service Flow Management Service on the NCMS. They are defined to support QoS service flows. A service flow ID for a unidirectional service flow is created and managed by the NCMS (or a network entity). The (MS MAC address, Service Flow ID) pair uniquely identifies a service flow. The CID is only managed by the MAC layer in a BS. The MS MAC Address in C-SFM-REQ is used to authorize the MS whether the QoS information is permitted.

Service flow application clients that interact with the CS convergence layer should transform service flow information and CS parameter information to the appropriate parameters of the network protocol in the network side and in the reverse direction. How to convert specific QoS parameters between an IEEE 802.16-Service-Flow and the Network or Packet Data Flows is out of scope. The service flow management primitives are designed as a 2-way handshake because the resource reservation protocols in IETF and the primitives at the IEEE 802.16 MAC SAP are designed as a 2-way handshake, but service flow MAC management messages in this standard are designed as a 3-way handshake (DSx-REQ/RSP/ACK) in order to negotiate QoS requirements for a given service flow.

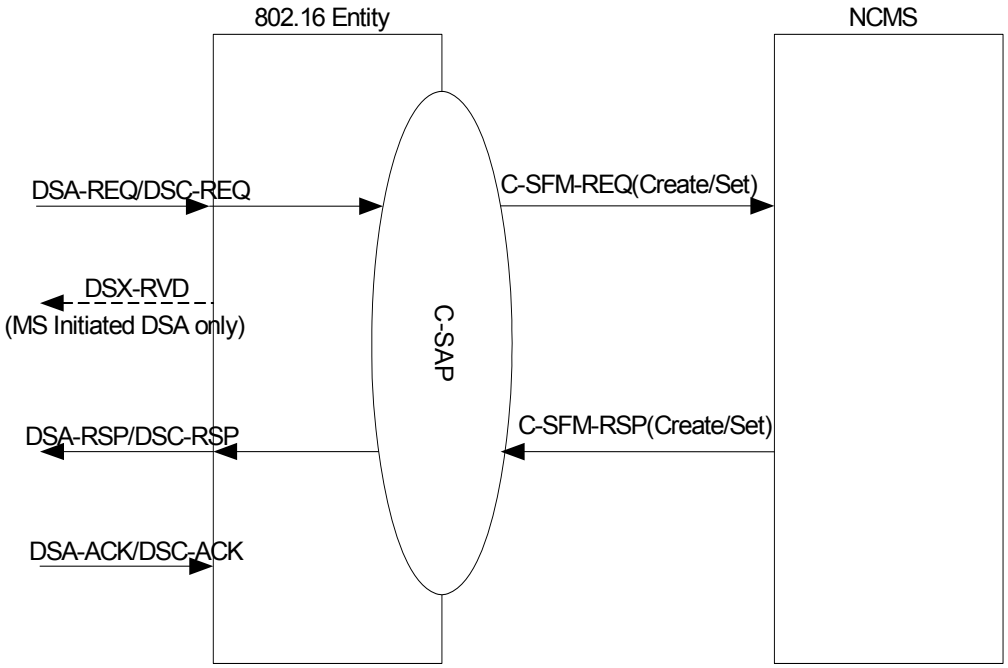

Figure 377—SFM-REQ(Create/Set) and C-SFM-RSP(Create/Set) flow, IEEE 802.16 entity initiated

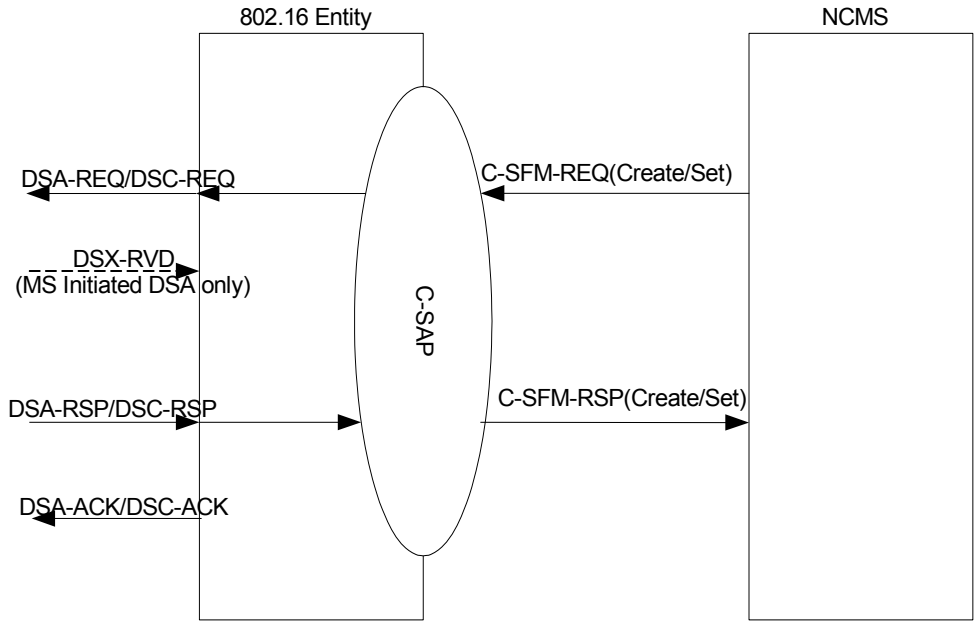

Figure 378—C-SFM-REQ (create and Set) and C-SFM-RSP (Create and Set) primitives flow, NCMS initiated

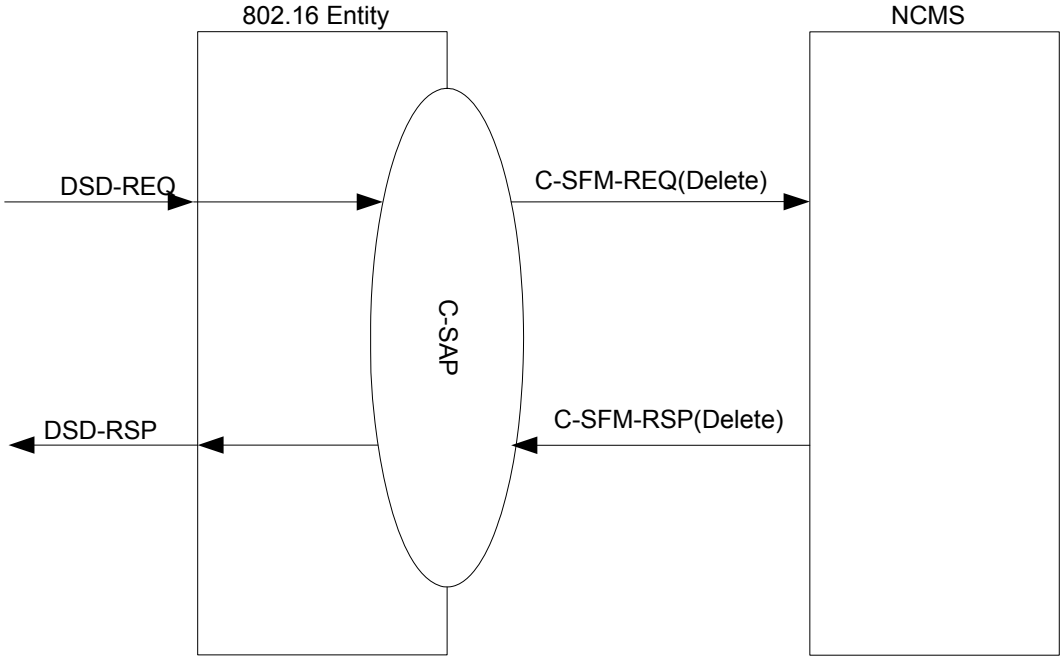

Figure 379—C-SFM-REQ(Delete) and C-SFM-RSP(Delete) primitives flow, IEEE 802.16 entity initiated

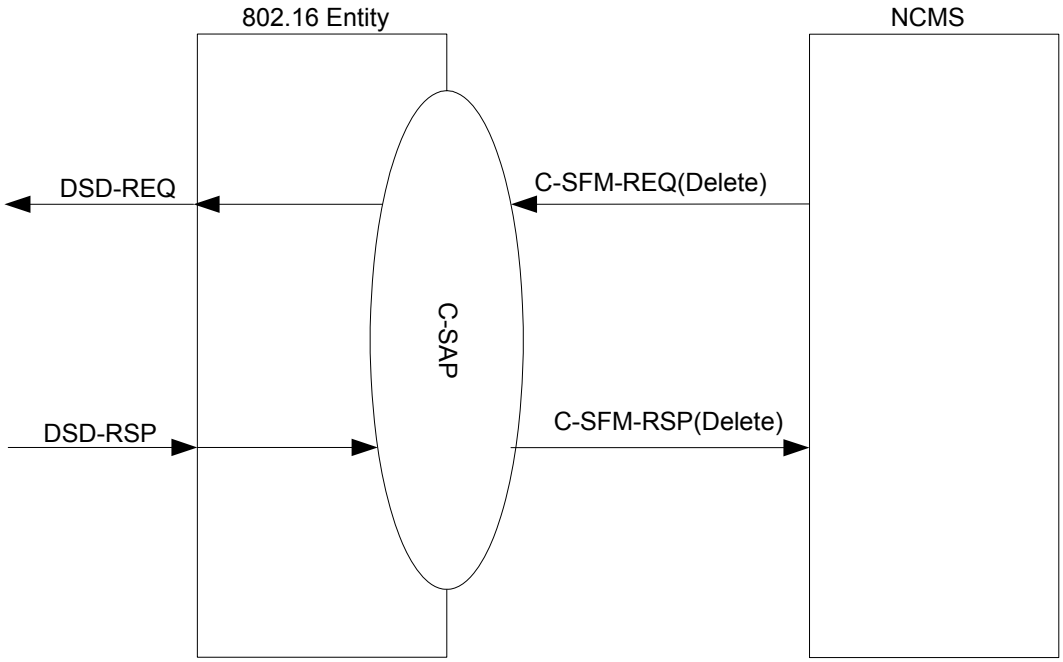

Figure 380—C-SFM-REQ(Delete) and C-SFM-RSP(Delete) primitives flow, NCMS initiated

14.2.9.1 C-SFM-REQ

This primitive is used by an IEEE 802.16 entity or NCMS to trigger a service flow management procedure. The Operation_Type included in this primitive defines the type of service flow management procedure to be performed. The possible Operation_Types for this primitive are listed in table below:

Operation_Type	Description
Create	Create a new service flow
Set	Change parameters of existing service flow
Delete	Deletion of an existing service flow

The following subclauses define the primitive when its operation type is set to a specific operation.

14.2.9.1.1 C-SFM-REQ (Operation_Type = Create)

14.2.9.1.1.1 Function

When Operation_Type is set to Create, this primitive shall be used to initiate a new service flow creation by either an IEEE 802.16 entity or NCMS. This primitive shall contain QoS information for the new service flow.

14.2.9.1.1.2 Semantics of the service primitive:

The parameters of the primitives are as follows:

C-SFM-REQ
(
Operation_Type: Create,
Destination: MS, or BS, or NCMS,
Attribute_List:
MS MAC Address,
Service flow ID,
Service flow descriptor,
Service flow information,
CS parameter information
)

MS MAC Address
48-bit unique identifier used by MS. MS MAC Address is used for user authorization

Service flow ID
Unique identifier to identify a unidirectional service flow, included in the primitive for NCMS initiated service flow creation.

Service flow descriptor
Information regarding the attribute an uplink or downlink service flow

Service flow information
Required QoS information of a service flow include traffic characteristics and a scheduling type such as service class name, QoS parameter set type, maximum sustained traffic rate, maximum traffic burst, minimum reserved traffic rate, minimum tolerable traffic rate, service flow scheduling type, tolerate jitter and maximum latency. In case of MBS flow creation originated by NCMS, the service flow information shall additionally contain MBS_Zone, the connection identifier CID, Logical Channel ID and security association.

CS parameter information
Required CS information for classification and handling of the service flow.

14.2.9.1.1.3 When generated

— IEEE 802.16 entity to NCMS:
This primitive is generated when the IEEE 802.16 entity creates a service flow (i.e., a BS receives a DSA-REQ message.).

— NCMS to IEEE 802.16 entity:
This primitive is used when the QoS management entity in the NCMS triggers the creation of a new service flow.

14.2.9.1.1.4 Effect of receipt

— IEEE 802.16 entity to NCMS:

The QoS management entity in the NCMS shall respond to this primitive using C-SFM-RSP(Create). The management entity for service flows checks the validity of the request from the point of view of its own resources. If the request is accepted, the QoS management entity in NCMS creates unique service flow ID for the request.

— NCMS to IEEE 802.16 entity:
The IEEE 802.16 entity receiving the primitive shall trigger the transmission of a DSA-REQ message following the information provided by this primitive.

14.2.9.1.2 C-SFM-REQ (Operation_Type = Set)

14.2.9.1.2.1 Function

When Operation_Type is set to Set, this primitive shall be used to modify existing service flow parameters by either an IEEE 802.16 entity or NCMS. This primitive shall contain the new information for the modifications of the service flow.

14.2.9.1.2.2 Semantics of the service primitive:

The parameters of the primitive are as follows:

C-SFM-REQ
(
Operation_Type: Set,
Destination: MS, or BS, or NCMS,
Attribute_List:
Service flow ID,
MS MAC Address,
Service flow descriptor,
Service flow information,
CS parameter information
)

Service flow ID
Unique identifier to identify a service flow.

MS MAC Address
48-bit unique identifier used by MS. MS MAC Address is used for user authorization

Service flow descriptor
Information regarding the attribute of an uplink or downlink service flow

Service flow information
Required QoS information of a service flow include traffic characteristics and a scheduling type such as service class name, QoS parameter set type, maximum sustained traffic rate, maximum traffic burst, minimum reserved traffic rate, minimum tolerable traffic rate, service flow scheduling type, tolerate jitter and maximum latency. In case of MBS flow set originated by NCMS, the service flow information shall additionally contain MBS_Zone, the connection identifier CID, Logical Channel ID and security association.

CS parameter information
Required IP filter rules of a service flow such as packet classification rule and IPv6 flow label

14.2.9.1.2.3 When generated

— IEEE 802.16 entity to NCMS:
This primitive is generated when the IEEE 802.16 entity change the parameters of an existing service flow (BS receives a DSC-REQ message).

— NCMS to IEEE 802.16 entity:

This primitive is generated when the QoS management entity in NCMS informs the IEEE 802.16 entity of the QoS information modification.

14.2.9.1.2.4 Effect of receipt

— IEEE 802.16 entity to NCMS:
The QoS management entity in the NCMS shall respond to this primitive by sending C-SFM-RSP(Set). The management entity for service flows checks the validity of the request from the point of view of its own resources.
— NCMS to IEEE 802.16 entity:
The IEEE 802.16 entity receiving the primitive shall trigger transmission of a DSC-REQ message following the information provided by this primitive.

14.2.9.1.3 C-SFM-REQ (Operation_Type = Delete)

14.2.9.1.3.1 Function

When Operation_Type is set to Delete, this primitive shall be used to delete an existing service flow by either an IEEE 802.16 entity or NCMS.

14.2.9.1.3.2 Semantics of the service primitive:

The parameters of the primitive are as follows:

C-SFM-REQ
(
Operation_Type: Delete,
Destination: MS, or BS, or NCMS,
Attribute_List:
Service flow ID
)

Service flow ID
Unique identifier to identify a service flow.

14.2.9.1.3.3 When generated

— IEEE 802.16 entity to NCMS:
This primitive is generated when the IEEE 802.16 entity delete an existing service flow (BS receives a DSD-REQ message).
In the MBS case, this primitive only can be issued from NCMS to IEEE 802.16 entity.
— NCMS to IEEE 802.16 entity:
This primitive is generated when the QoS management entity in NCMS informs the IEEE 802.16 entity of the deletion of an existing service flow.

14.2.9.1.3.4 Effect of receipt

— IEEE 802.16 entity to NCMS:
The QoS management entity in NCMS shall respond to this primitive by sending C-SFM-RSP(Delete). The management entity for service flows release assigned resources for the service flow ID.
— NCMS to IEEE 802.16 entity:
The IEEE 802.16 entity receiving the primitive shall transmit the DSD-REQ message including the information provided by this primitive.

14.2.9.2 C-SFM-RSP

This primitive is used by an IEEE 802.16 entity or NCMS to respond to the request to begin a service flow management procedure. The Operation_Type included in this primitive defines the type of service flow management procedure to be performed. The possible Operation_Types for this primitive are listed in table below:

Operation_Type	Description
Create	Create a new service flow
Set	Change parameters of existing service flow
Delete	Deletion of an existing service flow

The following subclauses define the primitive when its operation type is set to a specific operation.

14.2.9.2.1 C-SFM-RSP (Operation_Type = Create)

14.2.9.2.1.1 Function

This primitive is used by the IEEE 802.16 entity or the QoS management entity in NCMS to respond to the C-SFM-REQ for a service flow creation. Service flow information in this primitive contains approved QoS information if the.request is accepted.

14.2.9.2.1.2 Semantics of the service primitive:

The parameters of the primitives are as follows:

C-SFM-RSP
(
Operation_Type: Create,
Destination: MS, or BS, or NCMS,
Attribute_List:
MS MAC Address,
Service flow ID,
Service flow descriptor,
Service flow information,
CS parameter information,
Service flow error parameter information
)

MS MAC Address
48-bit unique identifier used by MS. MS MAC Address is used for user identification

Service flow ID
Unique identifier to identify a service flow

Service flow descriptor
Information regarding the attribute an uplink or downlink service flow

Service flow information
Approved complete QoS information of a service flow such as service class name, QoS parameter set type, maximum sustained traffic rate, maximum traffic burst, minimum reserved traffic rate, minimum tolerable traffic rate, service flow scheduling type, tolerate jitter and maximum latency, target Packet Error Rate. In case of MBS flow creation originated by

NCMS, the service flow information shall additionally contain MBS_Zone, the connection identifier CID, Logical Channel ID and security association.

CS parameter information

Approved packet filter rules of a service flow such as packet classification rule and IPv6 flow label

Service flow error parameter information

Failed reason and every specific failed QoS parameter if a C-SFM-REQ is rejected

14.2.9.2.1.3 When generated

— IEEE 802.16 entity to NCMS:
This primitive is generated when an IEEE 802.16 entity receives a DSA-RSP message.

— NCMS to IEEE 802.16 entity:
This primitive is generated when the QoS management entity in NCMS responds to C-SFM-REQ(Create) primitive.

14.2.9.2.1.4 Effect of receipt

— IEEE 802.16 entity to NCMS:
This primitive informs the result of the service flow creation to the QoS management entity in NCMS.

— NCMS to IEEE 802.16 entity:
This primitive informs the result of the service flow creation to an IEEE 802.16 entity. An IEEE 802.16 entity receiving the primitive shall transmit DSA-RSP message based on the information provided by this primitive.

14.2.9.2.2 C-SFM-RSP (Operation_Type = Set)

14.2.9.2.2.1 Function

This primitive is used by the IEEE 802.16 entity or the QoS management entity in NCMS to respond to the C-SFM-REQ(Set) for a change in an existing service flow. Service flow information in this primitive contains approved QoS information if the request is accepted.

14.2.9.2.2.2 Semantics of the service primitive:

The parameters of the primitives are as follows:

C-SFM-RSP

```
(
Operation_Type: Set,
Destination: MS, or BS, or NCMS,
Attribute_List:
    Service flow ID,
    Service flow information,
    CS parameter information,
    Service flow error parameter information
)
```

Service flow ID

Unique identifier to identify a service flow

Service flow information

Approved complete QoS information of a service flow such as service class name, QoS parameter set type, maximum sustained traffic rate, maximum traffic burst, minimum reserved

traffic rate, minimum tolerable traffic rate, tolerate jitter and maximum latency. In case of MBS flow set originated by NCMS, the service flow information shall additionally contain MBS_Zone, the connection identifier CID, Logical Channel ID and security association.

CS parameter information

Approved IP filter rules of a service flow such as packet classification rule and IPv6 flow label

Service flow error parameter information

Failed reason and every specific failed QoS parameter if the request is rejected

14.2.9.2.2.3 When generated

— IEEE 802.16 entity to NCMS:
This primitive is generated when an IEEE 802.16 entity receives a DSC-RSP message.

— NCMS to IEEE 802.16 entity:
This primitive is generated when the QoS management entity in NCMS responds to C-SFM-RSP(Set) primitive.
In the MBS case, this primitive only can be issued from IEEE 802.16 entity to NCMS.

14.2.9.2.2.4 Effect of receipt

— IEEE 802.16 entity to NCMS:
This primitive informs the result of the service flow modification to the QoS management entity in NCMS.

— NCMS to IEEE 802.16 entity:
This primitive informs the result of the service flow modification to an IEEE 802.16 entity. An IEEE 802.16 entity receiving the primitive shall transmit DSC-RSP message based on the information provided by this primitive.

14.2.9.2.3 C-SFM-RSP(Operation_Type = Delete)

14.2.9.2.3.1 Function

This primitive is used by the IEEE 802.16 entity or the QoS management entity in NCMS to respond to the service flow deletion request.

14.2.9.2.3.2 Semantics of the service primitive:

The parameters of the primitives are as follows:

C-SFM-RSP

```
(
Operation_Type: Delete,
Destination: MS, or BS, or NCMS,
Attribute_List:
    Service flow ID
    Service flow error parameter information
)
```

Service flow ID

Unique identifier to identify a service flow

Service flow error parameter information

Failed reason if a C-SFM-REQ(Delete) request is rejected

14.2.9.2.3.3 When generated

— IEEE 802.16 entity to NCMS:
This primitive is generated when an IEEE 802.16 entity receives a DSD-RSP message.
— NCMS to IEEE 802.16 entity:
This primitive is generated when the QoS management entity in NCMS responds to C-SFM-REQ(Delete) primitive.

14.2.9.2.3.4 Effect of receipt

— IEEE 802.16 entity to NCMS:
This primitive informs the result of the service flow deletion of the QoS management entity in NCMS. The QoS management entity in NCMS deletes assigned resources for service flow ID.
— NCMS to IEEE 802.16 entity:
This primitive informs the result of the service flow deletion to an IEEE 802.16 entity. An IEEE 802.16 entity receiving the primitive shall transmit DSD-RSP message based on the information provided by this primitive.

14.2.10 Multicast and Broadcast Service Management

This subclause only applies to Multi-BS MBS.

14.2.10.1 MBS Capability Discovery

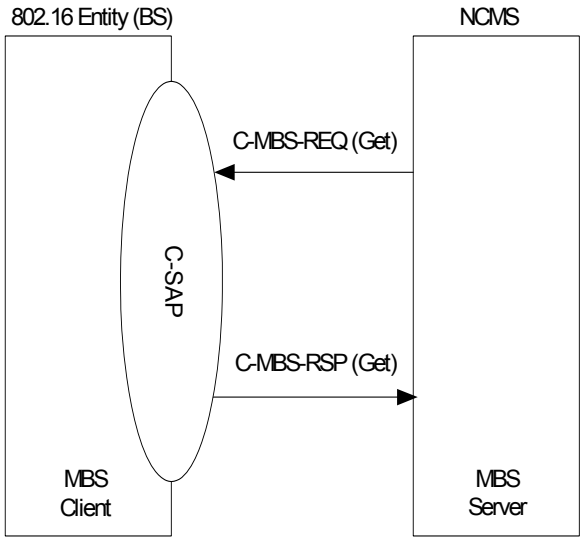

Figure 381—C-MBS-REQ (Get) and C-MBS-RSP (Get) primitives flow

14.2.10.1.1 C-MBS-REQ (Operation_Type = Get)

14.2.10.1.1.1 Function

This primitive is originated by the NCMS to a BS, to discover the MBS capability of the BS

14.2.10.1.1.2 Semantics of this primitive

C-MBS-REQ
(
Operation_Type: Get,
Destination: BS,
)

14.2.10.1.1.3 When generated

NCMS sends this primitive to a BS to discover its MBS capability.

14.2.10.1.1.4 Effect of receipt

Upon receiving this primitive, BS shall return the MBS capability in the C-MBS-RSP message.

14.2.10.1.2 C-MBS-RSP (Operation_Type = Get)

14.2.10.1.2.1 Function

This primitive is sent by a BS to the NCMS in response to a C-MBS-REQ (Get). The primitive includes the information about the MBS capability of the BS.

14.2.10.1.2.2 Semantics of this primitive

The parameters of the primitive are as follows:

C-MBS-RSP
(
Operation_Type: Get,
Destination: NCMS,
Attribute_List:
MBS Capability Information
)

MBS Capability Information
Type of MBS capability:
Bit 0: Type1, simple MBS capability, no macro diversity,
Bit 1: Type2, full MBS capability, macro diversity

14.2.10.1.2.3 When generated

BS returns this primitive, in response to the C-MBS-RSP message from NCMS.

14.2.10.1.2.4 Effect of receipt

NCMS gets confirmation that BS's MBS capability has been configured.

14.2.10.2 MBS Configuration Management Setting

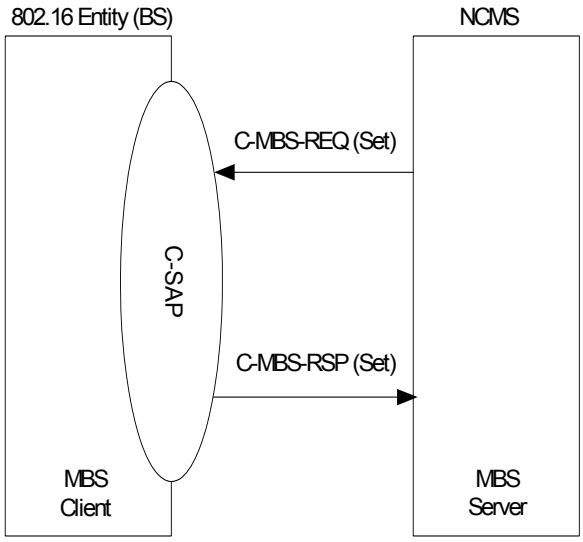

Figure 382—-MBS Zone Configuration and Management

14.2.10.2.1 C-MBS-REQ (Operation_Type = Set)

14.2.10.2.1.1 Function

This primitive is send by the NCMS to a BS, to configure the MBS information of the BS.

14.2.10.2.1.2 Semantics of this primitive

C-MBS-REQ
(
Operation_Type: Set,
Destination: BS,
Attribute_List:
MBS_Zone,
MBS Type
)

MBS_Zone
ID of the MBS zone as defined in 6.3.23.2.4. If the ID is 0xFF, it means that the BS does not belong to the MBSZone anymore. If the ID is not same as the value stored in BS, BS should modify according to the new value.

MBS Type
Type of MBS mode which shall be used. Two MBS types are defined:
— Type 1 for MBS without macro diversity
— Type 2 for MBS with macro diversity

If the MBS Zone is 0xFF, this parameter is omitted. If the value is not the same as the value stored in BS, BS should update to the new value accordingly.

14.2.10.2.1.3 When generated

NCMS sends this primitive to configure MB's MBS capability.

14.2.10.2.1.4 Effect of receipt

Upon receiving this primitive, BS shall set its MBS capability according to the attributes included in the primitive.

14.2.10.2.2 C-MBS-RSP (Operation_Type = Set)

14.2.10.2.2.1 Function

This primitive is send by a BS to the NCMS in response to a C-MBS-REQ (Set) primitive.

14.2.10.2.2.2 Semantics of this primitive

C-MBS-RSP
(
Operation_Type: Set,
Destination: NCMS,
Attribute_List:
MBS Error parameter information
)

MBS Error parameter information
Failed reason

14.2.10.2.2.3 When generated

BS returns this primitive, in response of the C-MBS-RSP message from NCMS.

14.2.10.2.2.4 Effect of receipt

Upon receiving this primitive, BS shall set its MBS capability according to the attributes included in the primitive.

14.2.10.3 MBS Configuration Management Layout

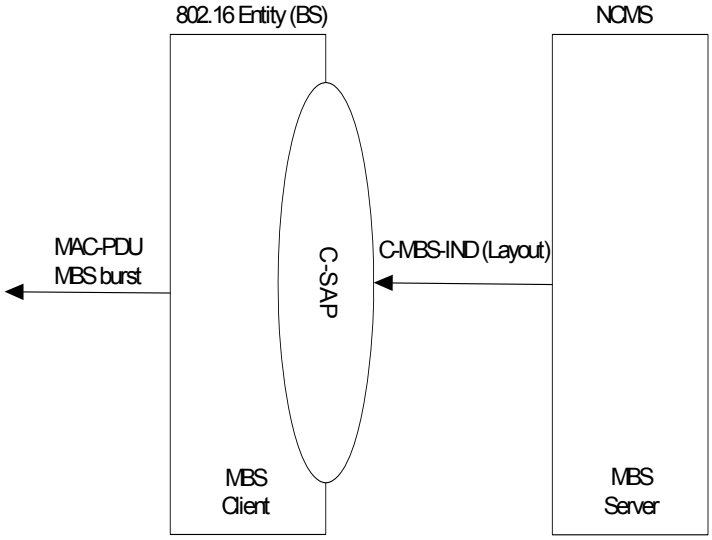

Figure 383—-C-MBS-IND (Layout) primitive flow

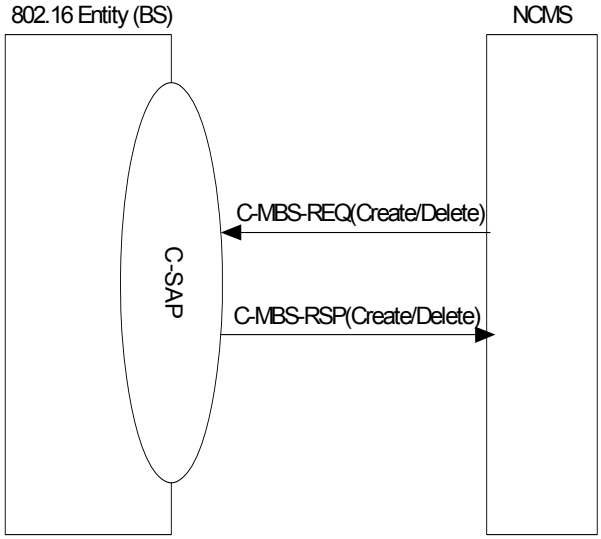

Figure 384—-MBS Service Flow (Create and Delete)

14.2.10.3.1 C-MBS-IND (MBS Portion Layout)

14.2.10.3.1.1 Function

This primitive is originated by the MBS Server and sent to all BS's that belong to the appropriate MBS zone. It is only send if type2 MBS capability is used in the MBS zone. The C-MBS-IND (Layout) primitive is send from the MBS server to the BS's on a per IEEE 802.16 downlink frame basis. The MBS-Portion-Layout primitive may be sent via a broadcast or multicast connection to the IEEE 802.16 entities and is not acknowledged. The BS has to generate a MBS portion as part of the IEEE 802.16 downlink frame according to information elements received by the C-MBS-IND (Layout) primitive. Several sets of information elements define the position size and layout of the MBS portion. The tuple MBS portion symbol/subchannel and offset/size specify the start portion and size of the MBS portion itself. The primitive contains list of burst definitions which specifies the position and size of all bursts inside the MBS portion. Every burst definition contains a list of MAC PDU definitions which specifies all the MAC PDU's inside a burst. In addition the primitive contains a time reference for synchronization purposes.

14.2.10.3.1.2 Semantics of this primitive

The parameters of this primitive are as follows:

```
C-MBS-IND
    (
    Event_Type: MBS Portion Layout,
    Destination: BS,
    Layout Attribute_List:
        MBS Portion Symbol Offset,
        MBS Portion Subchannel Offset,
        MBS Portion Number of Symbols,
        MBS Portion Number of Subchannels,
        Time Reference,
        List of Burst Attributes:
        (
            Burst Symbol Offset,
            Burst Subchannel Offset,
            Burst No of symbols,
            Burst No of subchannels,
            Coding Scheme,
            List of MAC PDU Attributes:
            (
                CID
                Logical Flow ID,
                MAC PDU Size
            )
        )
    )
```

MBS Portion Symbol Offset

MBS Portion Symbol Offset defines the start position of the MBS portion inside the downlink frame in number of OFDMA symbols.

MBS Portion Subchannel Offset

MBS Portion Subchannel Offset defines the start position of the MBS portion inside the downlink frame in number of OFDMA subchannels.

MBS Portion No of symbols

MBS Portion No of symbols defines the size of the MBS portion inside the downlink frame in number of OFDMA symbols.

MBS Portion No of subchannels

MBS Portion No of subchannels defines the size of the MBS portion inside the downlink frame in number of OFDMA subchannels.

Time reference

The time reference contains the current absolute time in the MBS server plus a static offset. It shall be derived from an absolute time reference. The static offset shall be equal or larger than the longest transport delay between MBS server and BS inside an MBS zone. Based on this time value and its own time reference, BS shall incorporate the MBS portion in the appropriate downlink frame. To incorporate the appropriate upper layer data into the MBS portion, the upper layer packets of MBS data flows shall be time stamped. The assignment of time stamp information to data packets is out of the scope of IEEE Std 802.16g.

List of Burst Attributes

The list contains a set of parameters for every burst.

Burst Symbol Offset

MBS Portion Symbol Offset defines the start position of a burst inside the MBS portion of a downlink frame in number of OFDMA symbols. The Burst Symbol Offset is defined relative to the position of the MBS portion.

Burst Subchannel Offset

MBS Portion Subchannel Offset defines the start position of a burst inside the MBS portion of a downlink frame in number of OFDMA subchannels. The burst subchannel Offset is defined relative to the position of the MBS portion.

Burst No of symbols

The burst No of symbols defines the size of the burst inside the MBS portion of a downlink frame in number of OFDMA symbols.

Burst No of subchannels

The burst No of subchannels defines the size of the burst inside the MBS portion of a downlink frame in number of OFDMA subchannels.

Coding Scheme

This information element defines the coding scheme of the burst.

List of MAC PDU Attributes

The list contains a set of parameters for every MAC PDU.

CID

This information element defines the CID of the MAC PDU.

Logical Flow ID

This information element defines the Logical Flow ID of the MAC PDU.

MAC PDU size

This information element defines the size of the MAC PDU in bytes. The order of the MAC PDU's inside a burst is given by the list order.

14.2.10.3.1.3 When generated

NCMS sends this primitive to provide MBS zone layout.

14.2.10.3.1.4 Effect of receipt

The BS has to generate a MBS portion as part of the IEEE 802.16 downlink frame according to information elements received by the C-MBS-IND (Layout) primitive.

14.2.10.3.2 C-MBS-REQ

14.2.10.3.2.1 C-MBS-REQ (Operation_Type = Create)

14.2.10.3.2.1.1 Function

This primitive can be sent from NCMS, and is used to notify the BSs which are in one of the MBS zones to create a new MBS transmitted radio link

14.2.10.3.2.1.2 Semantics of the service primitive:

The parameters of the primitives are as follows:

C-MBS-REQ
(
Operation_Type: Create,
Destination: BS,
Attribute_List:
MBS Zone,
Service flow ID,
Service flow information,
CS parameter information
)

MBS Zone
ID of the MBS zone as defined in 6.3.23.2.4

Service flow ID
Unique identifier to identify a unidirectional service flow, included in the primitive for NCMS initiated service flow creation.

Service flow information
Required QoS information of a service flow include traffic characteristics and a scheduling type such as service class name, QoS parameter set type, maximum sustained traffic rate, maximum traffic burst, minimum reserved traffic rate, minimum tolerable traffic rate, service flow scheduling type, tolerate jitter and maximum latency, the connection identifier CID, Logical Channel ID and security association.

CS parameter information
Required CS information for classification and handling of the service flow.

14.2.10.3.2.1.3 When generated

This primitive used from NCMS to IEEE 802.16 entities when the new MBS service data need to be delivered.

14.2.10.3.2.1.4 Effect of receipt

The IEEE 802.16 entity receiving the primitive shall trigger transmission of a DSA-REQ messages following the information provided by this primitive.

14.2.10.3.2.2 C-MBS-REQ (Operation_Type = Delete)

14.2.10.3.2.2.1 Function

When Operation_Type is set to 'Delete', this primitive shall be used to initiate an existing MBS radio link deletion by NCMS.

14.2.10.3.2.2.2 Semantics of the service primitive:

The parameters of the primitive are as follows:

C-MBS-REQ
(
Operation_Type: Delete,
Destination: BS,
Attribute_List:
MBS Zone
)
MBS Zone
ID of the MBS zone as defined in 6.3.23.2.4.

14.2.10.3.2.2.3 When generated

This primitive is from NCMS to BS to inform the IEEE 802.16 entities of the deletion of an existing MBS radio link.

14.2.10.3.2.2.4 Effect of receipt

The IEEE 802.16 entity receiving the primitive shall transmit the DSD-REQ message to release the MBS radio link.

14.2.10.3.3 C-MBS-RSP

14.2.10.3.3.1 C-MBS-RSP (Operation_Type = Create)

14.2.10.3.3.1.1 Function

This primitive is used by the IEEE 802.16 entities to respond to the C-MBS-REQ for a MBS radio link creation. The MBS path information in this primitive contains approved QoS information if the.request is accepted.

14.2.10.3.3.1.2 Semantics of the service primitive:

The parameters of the primitives are as follows:

C-MBS-RSP
(
Operation_Type: Create,
Destination: NCMS,
Attribute_List:
MBS Zone,
Service flow ID,
Service flow information,
CS parameter information,
Service flow error parameter information
)

MBS Zone
ID of the MBS zone as defined in 6.3.23.2.4.
Service flow ID
Unique identifier to identify a service flow

Service flow information
Approved complete QoS information of a service flow such as service class name, QoS parameter set type, maximum sustained traffic rate, maximum traffic burst, minimum reserved traffic rate, minimum tolerable traffic rate, service flow scheduling type, tolerate jitter and maximum latency, target Packet Error Rate, connection identifier CID, Logical Channel ID and security association.

CS parameter information
Approved IP filter rules of a service flow such as packet classification rule and IPv6 flow label.

Service flow error parameter information
Failed reason and every specific failed QoS parameter if the request is rejected.

14.2.10.3.3.1.2.1 When generated

This primitive is generated when an IEEE 802.16 entity receives a C-MBS-REQ (Create) primitive.

14.2.10.3.3.1.3 Effect of receipt

The NCMS receiving the primitive will record the parameters in it.

14.2.10.3.3.2 C-MBS-RSP (Operation_Type = Delete)

14.2.10.3.3.2.1 Function

This primitive is used by the IEEE 802.16 entities to respond to the C-MBS-REQ for a MBS radio link deletion.

14.2.10.3.3.2.2 Semantics of the service primitive:

The parameters of the primitives are as follows:

C-MBS-RSP
(
Operation_Type: Delete,
Destination: NCMS,
Attribute_List:
MBS Zone,
BSID,
Error Reason
)

MBS Zone
ID of the MBS zone as defined in 6.3.23.2.4.

BSID
ID of the BS which is response to the MBS data path deletion

Error Reason
Failed reason if a C-MBS-REQ is rejected

14.2.10.3.3.2.3 When generated

This primitive is generated when an IEEE 802.16 entity receives a C-MBS-REQ (Delete) primitive.

14.2.10.3.3.2.4 Effect of receipt

The NCMS receiving the primitive will know that whether the MBS radio link be deleted.

14.2.11 LBS Management

The NCMS manages the LBS capabilities that are implemented in the BS and the MS. LBS Management sub clause provides a set of primitives for NCMS to retrieve parameters that are required for supporting LBS. Figure 517 depicts the LBS Management primitives.

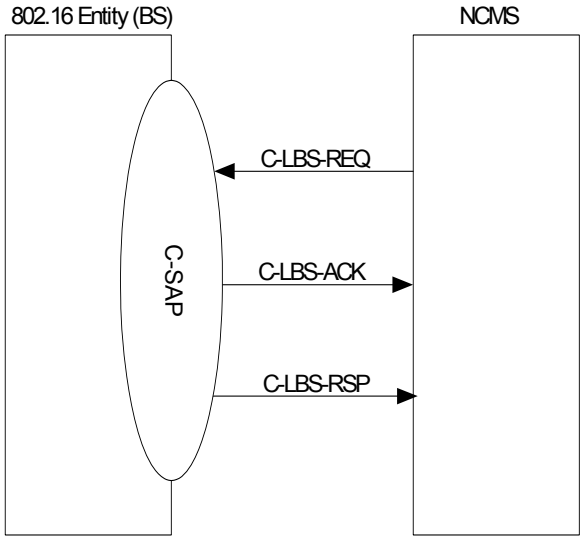

Figure 385—-LBS Management Primitives

Operation_Type	Description
Get	LBS parameters

14.2.11.1 C-LBS-REQ

NCMS sends C-LBS-REQ primitive.

14.2.11.1.1 Function

This primitive is used by NCMS to request LBS parameters that are needed for estimating the MS location.

14.2.11.1.2 Semantics of the service primitive:

This parameters of the primitive are as follow:

C-LBS-REQ

(
Operation_Type: Get,
Destination: BS,
Attribute_List:
MS MAC Address,
LBS Parameter Types
)

MS MAC Address

48-bit MAC address that identifies the MS.

LBS Parameter Types

Identify the types of LBS parameter requested by NCMS. It is a bit field {CINR, RSSI, D-TDOA, U-TDOA}. “1” in each bit indicates the corresponding parameter is requested.

14.2.11.1.3 When generated

A trigger from a LBS application (e.g E911 service) will initiate NCMS to call this primitive.

14.2.11.1.4 Effect of receipt

When this primitive is called, the BS will send C-LBS-ACK to NCMS to acknowledge the receipt of C-LBS-REQ, and then execute the necessary procedure to collect the LBS of parameters.

14.2.11.2 C-LBS-ACK

14.2.11.2.1 Function

This primitive acknowledges that C-LBS-REQ has been received.

14.2.11.2.2 Semantics of the service primitive

This parameters of the primitive are as follow:

C-LBS-ACK

(
Event_Type: LBS,
Destination: NCMS,
Attribute_List:
MS MAC Address,
)

MS MAC Address

48-bit MAC address that identifies the MS.

14.2.11.2.3 When generated

The reception of C-LBS-REQ.

14.2.11.2.4 Effect of receipt

The NCMS advances to the second stage of the 3-way LBS handshake exchange with the BS IEEE 802.16 entity.

14.2.11.3 C-LBS-RSP

14.2.11.3.1 Function

This primitive is used by BS to return LBS parameters as requested in C-LBS-REQ.

14.2.11.3.2 Semantics of the service primitive:

The parameters of the primitive are as follow:

C-LBS-RSP
(
Operation_Type: Get,
Destination: NCMS,
Attribute_List:
MS MAC Address,
Requested LBS Parameters[]
BSID,
CINR mean,
RSSI mean
D-TDOA,
U-TDOA
)

MS MAC Address
48-bit MAC address that identifies the MS.

Requested LBS Parameters[]
Requested LBS Parameters is an array that contains the following parameters:

- BSID—BS unique identifier of serving BS and neighboring BSs, and is used as the index of the array.
- CINR mean—indicates the mean CINR measured by the MS from the serving BS or neighboring BSs as identified in BSID. The value shall be interpreted as a signed byte with units of 0.5 dB.
- RSSI mean—indicates the mean RSSI measured by the MS from the serving BS or neighboring BSs as identified in BSID. The value shall be interpreted as an unsigned byte with units of 0.25 dB, such that 0x00 is interpreted as –103.75 dBm, an MS shall be able to report values in the range –103.75 dBm to –40 dBm.
- D-TDOA—indicates the delay of DL signals that MS received from a neighboring BS, as identified by BSID, relative to the serving BS. The value shall be interpreted as a signed integer in units of micro second.
- U-TDOA—indicates the delay of UL signals that a neighboring BS, as identified by BSID, receives from the MS, relative to the serving BS. The value shall be interpreted as a signed integer in units of nano second.

14.2.11.3.3 When generated

The reception of C-LBS-REQ.

14.2.11.3.4 Effect of receipt

This primitive returns the LBS parameters to NCMS.

Annex A

(informative)

Bibliography

[B1] Alamouti, S. M., "A Simple Transmit Diversity Technique for Wireless Communications," *IEEE Journal on Select Areas in Communications*, vol. 16, no. 8, pp. 1451–1458, Oct. 1998.

[B2] ATM Forum Specification af-pnni-0055.000, Private Network-Network Interface Specification, Version 1.0, Mar. 1996.

[B3] Branlund, D., "Stacked Carrier OFDM: Providing High Spectral Efficiency with Greater Coverage," Wireless Communications Association International 7th Annual Technical Symposium, San Jose, CA, Jan. 17–19, 2001.[25]

[B4] Cantoni, A., and Godara, L. C., "Fast Algorithm for Time Domain Broad Band Adaptive Array Processing," *IEEE Trans. Aerops. Electr. Syst.*, AES-18, 682, Sept. 1982.

[B5] CEN/TC 278 prEN 12253, Road Transport and Traffic Telematics (RTTT)—Dedicated Short Range Communication (DSRC)—Physical Layer using Microwave at 5.8 GHz.

[B6] CEPT/ERC/REC 70-03, Relating to the use of short range devices (SRD), http://www.ero.dk/ doc98/ official/pdf/REC7003E.PDF.

[B7] Chu, D. C., "Polyphase codes with good periodic correlation properties," *IEEE Transactions on Information Theory*, pp. 531–532, July 1972.

[B8] Craig, K. H., ed., *Propagation planning procedures for LMDS*, ACTS Project 215, CRABS, Jan. 1999.

[B9] Drury, G., Markarian, G., and Pickavance, K., "Coding and Modulation in Digital Television," KLUWER ACADEMIC Publishers, 2000, USA.

[B10] ECC/DEC/(04)08, "ECC Decision of 09 July 2004 on the harmonized use of the 5 GHz frequency bands for the implementation of Wireless Access Systems including Radio Local Area Networks (WAS/ RLANs)," July 9, 2004, revised Nov. 2004, http://www.ero.dk/documentation/docs/ doccategory.asp?catid=1&catname=ECC/ERC/ECTRA%20Decisions.

[B11] ERC Report 15, Compatibility Studies Between Radar and WLANs Operating at Frequencies Around 5.5 GHz, http://www.ero.dk/doc98/Official/pdf/REP015.pdf.

[B12] ERC Report 72, Compatibility Studies Related to the possible Extension Band for HIPERLAN at 5 GHz, http://www.ero.dk/doc98/Official/pdf/REP072.pdf.

[B13] Erceg, V., et al., "Channel models for fixed wireless access applications," http://www.wirelessman.org/tg3/contrib/802163c-01_29r4.pdf.

[B14] ETSI EN 300 674 v1.1.1 (1999–2), ERM RTTT, Technical characteristics and test methods for Dedicated Short Range Communication (DSRC) transmission equipment (500 kbit/s / 250 kbit/s) operating in the 5,8 GHz Industrial, Scientific and Medical (ISM) band.

[25]Contact WCAI at +1(202)452 7823 or sahar@wcai.com to obtain copy.

[B15] ETSI EN 301 021 v1.4.1 (2001/03), Fixed Radio Systems: Point-to-multipoint equipment: Time division Multiple Access (TDMA): Point-to-Multipoint digital radio systems bands in the range 3 GHz to 11 GHz.

[B16] ETSI Technical Report TR 101 177 v1.1.1 (May 1998), Broadband Radio Access Networks (BRAN): Requirements and architectures for broadband fixed radio access networks (HIPERACCESS).

[B17] ETSI TS 101 475 v1.1.1 (2000–4), BRAN HIPERLAN Type 2; Physical Layer.

[B18] Falconer, D., and Ariyavisitakul, S. L., "Frequency Domain Equalization for 2–11 GHz Fixed Broadband Wireless systems," Tutorial, presented during Session #11 of IEEE 802.16 in Ottawa, Canada, Jan. 22, 2001.

[B19] FCC CFR Title 47, Part 15, http://wireless.fcc.gov/index.htm?job=rules_and_regulations, Federal Communications Commission.

[B20] FIPS 140-2 (May 2001), Security Requirements for Cryptographic Modules.

[B21] Frank, R. L., and Zadoff, S. A., "Phase shift pulse codes with good periodic correlation properties," *IRE Transactions on Information Theory*, Oct. 1962, pp. 381–382.

[B22] Hagenauer, J., "The Turbo principle: Tutorial introduction and state of the art," *Proceedings of the International Symposium on Turbo Codes*, Brest, France, Sept. 1997, pp. 1–11.

[B23] IEEE 100, *The Authoritative Dictionary of IEEE Standards Terms*, Seventh Edition.

[B24] IEEE Std 802.1F™-1993, IEEE Standard for Local and Metropolitan Area Networks: Common Definitions and Procedures for IEEE 802 Management Information.

[B25] IEEE Std 802.5™-1998, Information technology—Telecommunications and information exchange between systems—Local and metropolitan area networks—Specific requirements—Part 5: Token ring access method and physical layer specifications.

[B26] IEEE Std 802.10™-1998, IEEE Standards for Local and Metropolitan Area Networks: Standard for Interoperable LAN/MAN Security (SILS).

[B27] IEEE Std 802.10c™-1998, Interoperable LAN/MAN Security (SILS)—Key Management (Clause 3).

[B28] IEEE Std 802.11™-2007, IEEE Standard for Information Technology—Telecommunications and information exchange between systems—LANs and MANs--Specific requirements—Part 11: WLAN MAC and PHY Specifications.

[B29] IEEE Std 802.11-2007, Clause 17: Wireless LAN Medium Access Control (MAC) and Physical Layer (PHY) specifications: High Speed Physical Layer in the 5 GHz Band, http://standards.ieee.org/reading/ieee/std/lanman.

[B30] IETF RFC 1750, "Randomness Recommendations for Security," December 1994.

IETF RFC 1902, "Structure of Management Information for Version 2 of the Simple Network Management Protocol (SNMPv2)," January 1996.

IETF RFC 1903, "Textual Convention for Version 2 of the Simple Network Management Protocol (SNMPv2)," January 1996.

IETF RFC 2132, "DHCP Options and BOOTP Vendor Extensions," S. Alexander, and R. Droms, March 1997.

IETF RFC 2576, "Coexistence between Version 1, Version 2, and Version 3 of the Internet-standard Network Management Framework," March 2000.

IETF RFC 3394, "Advanced Encryption Standard (AES) Key Wrap Algorithm," J. Schaad, R. Housley, September 2002. (http://www.ietf.org/rfc/rfc3394.txt)

[B31] ISO/IEC 7498-1 (1994), Information technology—Open Systems Interconnection—Basic Reference Model: The Basic Model.

[B32] *ITU Radio Regulations*, Appendix S8, 1998.

[B33] ITU-R Recommendation P.452, Prediction procedure for the evaluation of microwave interference between stations on the surface of the Earth at frequencies above about 0.7 GHz.

[B34] ITU-R Recommendation F.1499, Radio transmission systems for fixed broadband wireless access (BWA) based on cable modem standards.

[B35] ITU-R Recommendation M.1652, Dynamic frequency selection (DFS) in wireless access systems including radio local area networks for the purpose of protecting the radio determination service in the 5 GHz band, 2003, http://www.itu.int/rec/recommendation.asp?type=folders&lang=e&parent=R-REC-M.1652 .

[B36] ITU-R Recommendation P.530-8, Propagation data and prediction methods required for the design of terrestrial line-of-sight systems.

[B37] Johnson, D., and Dudgeon, D., "*Array Signal Processing*," Englewood Cliffs, NJ: Prentice-Hall, 1993.

[B38] Liberti, J. C., and Rappaport, T. S., "*Smart Antenna for Wireless Communications*," Englewood Cliffs, NJ: Prentice-Hall, 1999.

[B39] Milewski, A., "Periodic Sequences with Optimal Properties for Channel Estimation and Fast Start-Up Equalization," *IBM J. Res. Develop.*, vol. 37, no. 5, pp. 426–431, Sept. 1983.

[B40] Sari, H., and Karam, G., "*Orthogonal Frequency-Division Multiple Access and its Application to CATV Networks*," European Transactions on Telecommunications (ETT), vol. 9, no. 6, pp. 507–516, Nov.–Dec. 1998.

[B41] SCTE DSS 00-05, Radio Frequency Interface 1.1 Specification, [DOCSIS SP-RFIv1.1-I05-000714], July 2000.

[B42] SCTE DSS 00-09, Baseline Privacy Plus Interface Specification, December 2000.

[B43] Schneier, Bruce, *Applied Cryptography: Protocols, Algorithms, and Source Code in C*, Second Edition, John Wiley & Sons, 1994.

[B44] Sydor J., *A Proposed High Data Rate 5.2/5.8GHz Point to Multipoint MAN System*, IEEE 802.16hc-00/12, Oct. 2000.

[B45] U.K. Dept. of the Environment, Transport, and the Regions, *Digest of Environmental Statistics*, 15/3/2001, http://www.environment.detr.gov.uk/des.

[B46] USA ITU-R WP7C/24, 8A-9B/3 (2000–2003), Analysis of potential interference between spaceborne SARS and U-NII devices around 5.3 GHz, http://www.itu.int/itudoc/itu-r/sg7/docs/wp7c/2000-03/ contrib/ 024e.html.

[B47] Viterbi, A. J., Wolf, J. K., Zehavi, E., and Padovani, R., "A pragmatic approach to trellis-coded modulation," *IEEE Communications Magazine*, pp. 11–19, July 1989.

[B48] Wolf, J. K., and Zehavi, E., "P2 codes: Pragmatic trellis codes utilizing punctured convolutional codes," *IEEE Communications Magazine*, pp. 94–99, Feb. 1995.

Annex B

(informative)

Supporting material for frequencies below 11 GHz

B.1 Performance characteristics

B.1.1 Reserved

B.1.2 WirelessMAN-OFDM/OFDMA PHY symbol and performance parameters

The effective bandwidth of the transmitted signal is related to the subcarrier spacing and the number of subcarriers.

In order to calculate the sampling frequency for any bandwidth, the bandwidth efficiency is defined as shown in Equation (B.1).

$$BW_{Efficiency} = \frac{F_s}{BW} \cdot \frac{(N_{used} + 1)}{N_{FFT}} = \frac{\Delta f \cdot (N_{used} + 1)}{BW} \tag{B.1}$$

where

BW	is the channel bandwidth (Hz)
F_s	is the sampling frequency (Hz)
Δf	is the subcarrier spacing (Hz)
$N_{used} + 1$	is the number of active subcarriers used in the FFT (pilot and data subcarriers) + DC subcarrier
N_{FFT}	is the FFT size

The bandwidth efficiency is designed to be in the range of 83% to 95%, depending mainly on the FFT size, in order to occupy the maximum usable bandwidth but still allow adequate RF filtering.

Table B.1, Table B.2, and Table B.3 give some calculations of the subcarrier spacing, symbol duration and CP duration for different masks. The sampling rate is defined as $F_s = BW \cdot 8/7$, except for 256-OFDM (see 8.3.2.4) in licensed bandwidths, which are not a multiple of 1.75 MHz. In those cases, the sampling rate is $F_s = BW \cdot 7/6$.

Table B.1—OFDM channelization parameters for licensed bands

Bandwidth (MHz)		OFDM (N_{FFT} = 256)					
		Δf(kHz)	T_b(μs)	T_g(μs)			
				$T_b/32$	$T_b/16$	$T_b/8$	$T_b/4$
MMDS (n = 86/75)	1.5	$6\frac{23}{32}$	$148\frac{36}{43}$	$4\frac{28}{43}$	$9\frac{13}{43}$	$18\frac{26}{43}$	$36\frac{9}{43}$
	3.0	$13\frac{7}{16}$	$74\frac{18}{43}$	$2\frac{14}{43}$	$4\frac{28}{43}$	$9\frac{13}{43}$	$18\frac{26}{43}$
	6.0	$26\frac{7}{8}$	$37\frac{9}{43}$	$1\frac{7}{43}$	$2\frac{14}{43}$	$4\frac{28}{43}$	$9\frac{13}{43}$
	12.0	$53\frac{3}{4}$	$18\frac{26}{43}$	$\frac{25}{43}$	$1\frac{7}{43}$	$2\frac{14}{43}$	$4\frac{28}{43}$
	24.0	$107\frac{1}{2}$	$9\frac{13}{43}$	$\frac{25}{86}$	$\frac{25}{43}$	$1\frac{7}{43}$	$2\frac{14}{43}$
ETSI (n = 8/7)	1.75	$7\frac{13}{16}$	128	4	8	16	32
	3.5	$15\frac{5}{8}$	64	2	4	8	16
	7.0	$31\frac{1}{4}$	32	1	2	4	8
	14.0	$62\frac{1}{2}$	16	$\frac{1}{2}$	1	2	4
	28.0	125	8	$\frac{1}{4}$	$\frac{1}{2}$	1	2
WCS (n = 144/125)	2.5	$11\frac{1}{4}$	$88\frac{8}{9}$	$2\frac{7}{9}$	$5\frac{5}{9}$	$11\frac{1}{9}$	$22\frac{2}{9}$
	5.0	$22\frac{1}{2}$	$44\frac{4}{9}$	$1\frac{7}{18}$	$2\frac{7}{9}$	$5\frac{5}{9}$	$11\frac{1}{9}$
	10.0	45	$22\frac{2}{9}$	$\frac{25}{36}$	$1\frac{7}{18}$	$2\frac{7}{9}$	$5\frac{5}{9}$
	15.0	$67\frac{3}{16}$	$14\frac{38}{43}$	$\frac{20}{43}$	$\frac{40}{43}$	$1\frac{37}{43}$	$3\frac{31}{43}$

Table B.2—OFDMA channelization parameters for licensed bands

Bandwidth (MHz)		OFDMA (N_{FFT} = 2048)					
		Δf(kHz)	T_b(μs)	T_g(μs)			
				$T_b/32$	$T_b/16$	$T_b/8$	$T_b/4$
MMDS ($f_s/BW = 8/7$)	1.5	$\frac{36}{43}$	$1194\frac{2}{3}$	$37\frac{1}{3}$	$74\frac{2}{3}$	$149\frac{1}{3}$	$298\frac{2}{3}$
	3.0	$1\frac{60}{89}$	$597\frac{1}{3}$	$18\frac{2}{3}$	$37\frac{1}{3}$	$74\frac{2}{3}$	$149\frac{1}{3}$
	6.0	$3\frac{8}{23}$	$298\frac{2}{3}$	$9\frac{1}{3}$	$18\frac{2}{3}$	$37\frac{1}{3}$	$74\frac{2}{3}$
	12.0	$6\frac{39}{56}$	$149\frac{1}{3}$	$4\frac{2}{3}$	$9\frac{1}{3}$	$18\frac{2}{3}$	$37\frac{1}{3}$
	24.0	$13\frac{11}{28}$	$74\frac{2}{3}$	$2\frac{1}{3}$	$4\frac{2}{3}$	$9\frac{1}{3}$	$18\frac{2}{3}$
ETSI ($f_s/BW = 8/7$)	1.75	$\frac{83}{85}$	1024	32	64	128	256
	3.5	$1\frac{61}{64}$	512	16	32	64	128
	7.0	$3\frac{29}{32}$	256	8	16	32	64
	14.0	$7\frac{13}{16}$	128	4	8	16	32
	28.0	$15\frac{5}{8}$	64	2	4	8	16
WCS ($f_s/BW = 8/7$)	2.5	$1\frac{32}{81}$	$714\frac{4}{5}$	$22\frac{2}{5}$	$44\frac{4}{5}$	$89\frac{3}{5}$	$179\frac{1}{5}$
	5.0	$2\frac{64}{81}$	$358\frac{2}{5}$	$11\frac{1}{5}$	$22\frac{2}{5}$	$44\frac{4}{5}$	$89\frac{3}{5}$
	10.0	$5\frac{47}{81}$	$179\frac{1}{5}$	$5\frac{3}{5}$	$11\frac{1}{5}$	$22\frac{2}{5}$	$44\frac{4}{5}$
	15.0	$8\frac{10}{27}$	$119\frac{7}{15}$	$3\frac{11}{15}$	$7\frac{7}{15}$	$14\frac{14}{15}$	$29\frac{13}{15}$

Table B.3—OFDM/OFDMA channelization parameters for license-exempt bands

			OFDM	OFDMA
	n		**144/25**	**8/7**
Bandwidth (MHz)	N_{FFT}		**256**	**2048**
10	Δf(kHz)		45	$5\frac{47}{81}$
	T_b(μs)		$22\frac{2}{9}$	$179\frac{1}{5}$
	T_g(μs)	$\frac{T_b}{32}$	$\frac{25}{36}$	$5\frac{3}{5}$
		$\frac{T_b}{16}$	$1\frac{17}{18}$	$11\frac{1}{5}$
		$\frac{T_b}{8}$	$2\frac{7}{9}$	$22\frac{2}{5}$
		$\frac{T_b}{4}$	$5\frac{5}{9}$	
20	Δf(kHz)		90	$11\frac{9}{56}$
	T_b(μs)		$11\frac{1}{9}$	$89\frac{3}{5}$
	T_g(μs)	$\frac{T_b}{32}$		$2\frac{4}{5}$
		$\frac{T_b}{16}$	$\frac{25}{36}$	$5\frac{3}{5}$
		$\frac{T_b}{8}$	$1\frac{7}{18}$	$11\frac{1}{5}$
		$\frac{T_b}{4}$	$2\frac{7}{9}$	$22\frac{2}{5}$

In Table B.4, raw bit rates are shown for typical bandwidths. The raw bite rate is defined as $N_{used} \cdot b_m \cdot c_r / T_s$, where b_m is the number of bits per modulation symbol and c_r is the coding rate.

Table B.4—OFDM/OFDMA raw bitrates (Mb/s)

Bandwidth (MHz)	T_g	BPSK 1/2	QPSK 1/2	QPSK 3/4	16-QAM 1/2	16-QAM 3/4	64-QAM 2/3	64-QAM 3/4
OFDM 256-FFT								
6 MHz (MMDS)	$T_b/32$	2.50	5.00	7.51	10.01	15.01	20.01	22.52
	$T_b/16$	2.43	4.86	7.28	9.71	14.57	19.43	21.85
	$T_b/8$	2.29	4.59	6.88	9.17	13.76	18.35	20.64
	$T_b/4$	2.06	4.13	6.19	8.26	12.38	16.51	18.58
7 MHz (ETSI)	$T_b/32$	2.92	5.82	8.73	11.64	17.45	23.27	26.18
	$T_b/16$	2.82	5.65	8.47	11.29	16.94	22.59	25.41
	$T_b/8$	2.67	5.33	8.00	10.67	16.00	21.33	24.00
	$T_b/4$	2.40	4.80	7.20	9.60	14.40	19.20	21.60
20 MHz (U-NII)	$T_b/16$	8.13	16.26	24.40	32.53	48.79	65.05	73.19
	$T_b/8$	7.68	15.36	23.04	30.72	46.08	61.44	69.12
	$T_b/4$	6.91	13.82	20.74	27.65	41.47	55.30	62.21
OFDMA 2048-FFT								
6 MHz (MMDS)	$T_b/32$		4.99	7.48	9.97	14.96	19.95	22.44
	$T_b/16$		4.84	7.26	9.68	14.52	19.36	21.78
	$T_b/8$		4.57	6.86	9.14	13.71	18.29	20.57
	$T_b/4$		4.11	6.17	8.23	12.34	16.46	18.51
7 MHz (ETSI)	$T_b/32$		5.82	8.73	11.64	17.45	23.27	26.18
	$T_b/16$		5.65	8.47	11.29	16.94	22.59	25.41
	$T_b/8$		5.33	8.00	10.67	16.00	21.33	24.00
	$T_b/4$		4.80	7.20	9.60	14.40	19.20	21.60

B.2 Frequency reuse of 1 for OFDMA

This subclause defines extensions of OFDMA system for working in deployment scenarios with frequency reuse of 1.

B.2.1 Introduction

The definition of an OFDMA system as defined in 8.4 is well suited to work with deployment scenarios with frequency reuse factor >1, but in order to satisfy requirement of reliability, coverage, capacity, spectral efficiency, and location base service. The system can be configured to work in a reuse of 1, which means the

same RF frequency is allocated to all sectors in the cell. In this case, a new scheme of work shall be introduced in order to achieve the needed performance. A scenario using a reuse of 1 is given in Figure B.1.

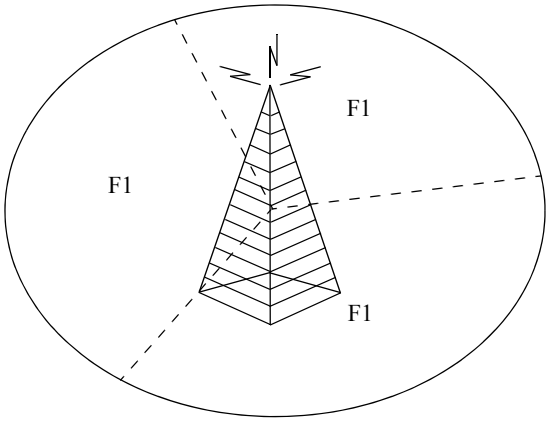

Figure B.1—Reuse of 1 configuration, 3 sectors per cell

There are three options of operation in the reuse of 1 scenario:

— **Asynchronous configuration**—In this configuration, every BS uses its own permutation, the frame lengths and starting times are not synchronized among the BSs. Therefore, orthogonality is kept within the BS but not between BSs. In this scenario, the BSs could be synchronized or not to the same reference clock. This mode will introduce interference between BS (subcarriers from different subchannels collide in a controlled way, determined by the different permutations). This configuration could be easily used as an independent low-cost hot spot deployment (as an example).

— **Synchronous configuration** —In this configuration, all BSs use the same reference clock (for example, by using GPS), the frame durations and starting times are also synchronized among the BSs but still each BS uses different permutations. Therefore, the time/frequency orthogonality is kept between and within the BSs operation but still interference between the same subchannels of different BS occurs. Due to the time synchronization in this scenario and the long symbol duration of the OFDMA symbol, fast handoff as well as soft handoff is possible. This configuration could be used as an independent BSs deployment with a controlled interference level (as an example).

— **Coordinated Synchronous configuration**—In this configuration, all BSs work in the synchronous mode but use also the same permutations. An upper layer is responsible for the handling of subchannels allocations within the sectors of the BS, making sure that better handling of the bandwidth is achieved and the system could handle and balance load between the sectors and within the system. This mode is identical in performance as the regular coverage scenarios, beside the fact that the bandwidth allocated to each sector is only a portion of the overall bandwidth, but when using the load balancing additional system gain is achieved. This configuration could be used as a full scale system deployment, with a common backbone (as an example).

The preferred scenario is the coordinated synchronous mode (when using this configuration with different permutations per BS we get the synchronous mode, and do not use a synchronized clock between the BSs as well we end up with the asynchronous mode of operation); the configuration of the BS sectors are presented in Figure B.2.

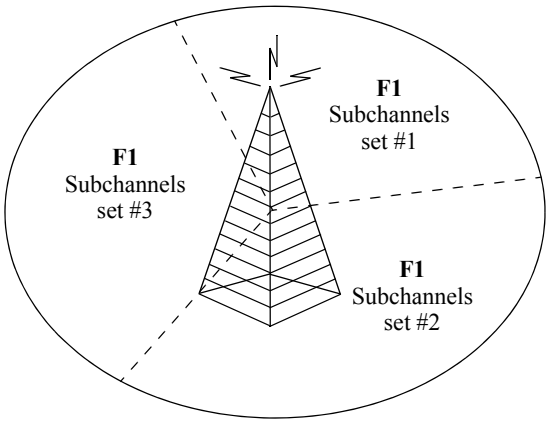

Figure B.2—Reuse of 1 configuration, 3 sectors per cell

Annex C

(informative)

Example MAC common part sublayer service definition

C.1 MAC service definition

This annex describes the services between the MAC and the CSs. This is a logical interface. As such, the primitives described are informative. Their purpose is to describe the information that must necessarily be exchanged between the MAC and the CSs to enable each to perform its requirements as specified in the remainder of this document. This subclause does not impose message formats or state machines for the use of these primitives.

In a layered protocol system, the information flow across the boundaries between the layers can be defined in terms of primitives that represent different items of information and cause actions to take place. These primitives do not appear as such on the medium (the air interface) but serve to define more clearly the relations of the different layers. The semantics are expressed in the parameters that are conveyed with the primitives.

C.1.1 MAC service definition for PMP

C.1.1.1 Primitives

The IEEE 802.16 MAC supports the following primitives at the MAC SAP, to support services between the MAC and the CSs in PMP mode.

MAC_CREATE_SERVICE FLOW.request
MAC_CREATE_SERVICE FLOW.indication
MAC_CREATE_SERVICE FLOW.response
MAC_CREATE_SERVICE FLOW.confirmation

MAC_CHANGE_SERVICE FLOW.request
MAC_CHANGE_SERVICE FLOW.indication
MAC_CHANGE_SERVICE FLOW.response
MAC_CHANGE_SERVICE FLOW.confirmation

MAC_TERMINATE_SERVICE FLOW.request
MAC_TERMINATE_SERVICE FLOW.indication
MAC_TERMINATE_SERVICE FLOW.response
MAC_TERMINATE_SERVICE FLOW.confirmation

MAC_DATA.request
MAC_DATA.indication

The use of these primitives to provide peer communication is shown in Figure C.1. The initial request for service from a higher layer is provided by the “request” primitive. When this request is sent across the air link to the peer MAC, it generates an “indicate” primitive to inform the peer CS of the request; the convergence entity responds with a “response” to the MAC. Again this is sent across the air link to the MAC on the originating side, which sends a “confirm” primitive to the original requesting entity.

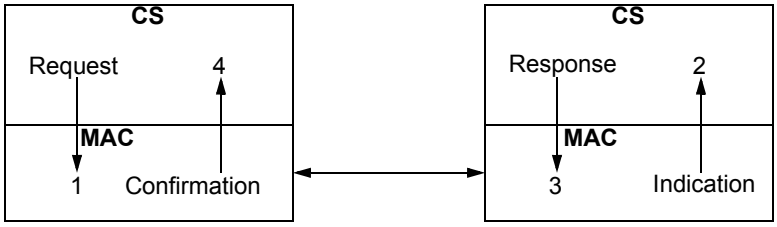

Figure C.1—Use of primitives to request service of MAC and generate response

In some cases, it is not necessary to send information to the peer station and the "confirm" primitive is issued directly by the MAC on the originating side. Such cases may occur, for example, when the request is rejected by the MAC on the requesting side. In cases where it is necessary to keep the other side of the link informed, an unsolicited "response" may be sent, in turn leading to the generation of an unsolicited "confirmation" for benefit of the CS.

For actions other than DATA.request and DATA.indication, the initiating CS sends a REQUEST primitive to its MAC. The initiating side MAC sends the appropriate Dynamic Service Addition, Change, or Deletion (DSx) Request message (see 6.3.14.7.1 and 6.3.14.8) to the receiving MAC. The noninitiating side MAC sends an INDICATION primitive to its CS. The noninitiating CS responds with a RESPONSE primitive, stimulating its MAC to respond to the initiating side MAC with the appropriate DSx Response message. The initiating side MAC responds to its CS with a CONFIRMATION primitive and, if appropriate, with the appropriate DSx Acknowledge message. At any point along the way, the request may be rejected (for lack of resources, etc.), terminating the protocol.

C.1.1.1.1 MAC_CREATE_SERVICE FLOW.request

C.1.1.1.1.1 Function

This primitive is issued by a CS entity in a BS or SS unit to request the dynamic addition of a connection.

C.1.1.1.1.2 Semantics of the service primitive

The parameters of the primitive are as follows:

```
MAC_CREATE_SERVICE FLOW.request
        (
        MAC Address
        scheduling service type,
        convergence sublayer,
        service flow parameters,
        payload header suppression indicator,
        encryption indicator,
        Packing on/off indicator,
        Fixed-length or variable-length SDU indicator,
        SDU length (only needed for fixed-length SDU connections),
        CRC request,
        ARQ parameters,
        sequence number
)
```


For connection requests initiated from a BS, the 48-bit MAC Address value identifies the SS with which the connection is to be established. The parameter has no significance for connection requests initiated from an SS.

The scheduling service type (see 6.3.5) is one of the following: UGS, rtPS, nrtPS, and BE service.

The convergence sublayer parameter indicates which CS handles data received on this connection. Values for specific CSs are given in 11.13.18.

The service flow parameters include details on such issues as peak and average rate, or reference to a service class. These parameters are the same as those in the DSC Request MAC Management message.

The payload header suppression indicator specifies whether the SDUs on the service flow are to have their headers suppressed.

The encryption indicator specifies that the data sent over this connection is to be encrypted, if ON. If OFF, then no encryption is used.

The packing on/off indicator specifies whether packing may be applied to the MAC SDUs on this connection. A value of ON means that packing is allowed for the connection.

The fixed-length or variable-length SDU indicator specifies whether the SDUs on the service flow are fixed-length or variable-length.

The SDU length specifies the length of the SDU for a fixed-length SDU service flow. The parameter has no significance for a variable length SDU service flow.

Cyclic redundancy check (CRC) request, if ON, requests that the MAC SDUs delivered over this connection are transported in MAC PDUs with a CRC added to them.

The ARQ parameters are whether ARQ is used for the connection, maximum retransmission limit, and acknowledgment window size.

The sequence number is used to correlate this primitive with its response from the BS via the MAC.

C.1.1.1.1.3 When generated

This primitive is generated by a CS of a BS or SS unit to request the BS to set up a new connection.

C.1.1.1.1.4 Effect of receipt

If the primitive is generated on the SS side, the receipt of this primitive causes the MAC to pass the request (in the form of a DSA-REQ message) to the MAC entity in the BS. The SS MAC remembers the correlation between sequence number and the requesting convergence entity.

If the primitive is generated on the BS side, the BS checks the validity of the request and, if valid, chooses a CID and includes it in the DSA-REQ message (6.3.14.9.3) sent to the SS. This CID shall be returned to the requesting CS via the CONFIRM primitive. If the primitive originated at the SS, the actions of generating a CID and authenticating the request are deferred to the INDICATION/RESPONSE portion of the protocol.

C.1.1.1.2 MAC_CREATE_SERVICE FLOW.indication

C.1.1.1.2.1 Function

This primitive is sent by the noninitiating MAC entity to the CS, to request the dynamic addition of a connection in response to the MAC receiving a DSA-REQ message. If the noninitiating MAC entity is at the BS, an SFID and possibly CID are generated and the request is authenticated.

C.1.1.1.2.2 Semantics of the service primitive

The parameters of the primitive are as follows:

```
MAC_CREATE_SERVICE FLOW.indication
        (
        service type,
        convergence sublayer,
        service flow parameters,
        sequence number
        )
```

Parameters: see MAC_CREATE_SERVICE FLOW.request. The encryption and CRC flags are not delivered with the.indication primitive since they will have already been acted on by lower layers, to decrypt the data or to check a CRC, before the MAC SDU is passed up to the CS.

C.1.1.1.2.3 When generated

This primitive is generated by the MAC of the noninitiating side of the protocol when it receives a DSA-REQ message from the initiating side of the connection.

C.1.1.1.2.4 Effect of receipt

When the CS receives this primitive, it checks the validity of the request from the point of view of its own resources. It accepts or rejects the request via the MAC_CREATE_SERVICE FLOW.response primitive.

If the connection request was originated on the SS side, the BS sends the CID to the SS side in this RESPONSE primitive. Otherwise, if the origin was the BS, the RESPONSE contains the CID contained in the DSA header bearing the indication.

C.1.1.1.3 MAC_CREATE_SERVICE FLOW.response

C.1.1.1.3.1 Function

This primitive is issued by a noninitiating MAC entity in response to a MAC_CREATE_SERVICE FLOW.indication requesting the creation of a new connection.

C.1.1.1.3.2 Semantics of the service primitive

The parameters of the primitive are as follows:

```
MAC_CREATE_SERVICE FLOW.response
        (
        Connection ID,
        response code,
        response message,
        sequence number,
        ARQ parameters
        )
```

The Connection ID is returned to the requester for use with the traffic specified in the request. If the request is rejected, then this value shall be ignored.

The response code indicates success or the reason for rejecting the request.

The response message provides additional information to the requester, in type/length/value (TLV) format.

The sequence number is returned to the requesting entity to correlate this response with the original request.

The ARQ parameters are whether ARQ is used for the connection, maximum retransmission limit, and acknowledgment window size.

C.1.1.1.3.3 When generated

This primitive is generated by the noninitiating CS entity when it has received a MAC_CREATE_SERVICE FLOW.indication.

C.1.1.1.3.4 Effect of receipt

The receipt of this primitive causes the MAC to send the DSA Response (DSA-RSP) message to the requesting MAC entity. Once the DSA Acknowledgment (DSA-ACK) is received, the MAC is prepared to pass data for this connection on to the air link.

C.1.1.1.4 MAC_CREATE_SERVICE FLOW.confirmation

C.1.1.1.4.1 Function

This primitive confirms to a convergence entity that a requested connection has been provided. It informs the CS of the status of its request and provides a CID for the success case.

C.1.1.1.4.2 Semantics of the service primitive

The parameters of the primitive are as follows:

```
MAC_CREATE_SERVICE FLOW.confirmation
        (
        Connection ID,
        response code,
        response message,
        sequence number
        )
```

Parameters: see MAC_CREATE_SERVICE FLOW.response.

C.1.1.1.4.3 When generated

This primitive is generated by the initiating side MAC entity when it has received a DSA-RSP message.

C.1.1.1.4.4 Effect of receipt

The receipt of this primitive informs the convergence entity that the requested connection is available for transmission requests.

C.1.1.1.5 Changing an existing connection

Existing connections may be changed in their characteristics on a dynamic basis to, for example, reflect changing bandwidth requirements. The following primitives are used:

MAC_CHANGE_SERVICE FLOW.request
MAC_CHANGE_SERVICE FLOW.indication
MAC_CHANGE_SERVICE FLOW.response
MAC_CHANGE_SERVICE FLOW.confirmation

The semantics and effect of receipt of these primitives are the same as for the corresponding CREATE primitives. A new CID shall be generated in the case of changing a service flow type from provisioned to admitted or active.

C.1.1.1.6 MAC_TERMINATE_SERVICE FLOW.request

C.1.1.1.6.1 Function

This primitive is issued by a CS entity in a BS or SS unit to request the termination of a connection.

C.1.1.1.6.2 Semantics of the service primitive

The parameters of the primitive are as follows:

```
MAC_TERMINATE_SERVICE FLOW.request
        (
        SFID
        )
```

The SFID parameter specifies which service flow is to be terminated.

C.1.1.1.6.3 When generated

This primitive is generated by a CS of a BS or SS unit to request the termination of an existing connection.

C.1.1.1.6.4 Effect of receipt

If the primitive is generated on the SS side, the receipt of this primitive causes the MAC to pass the request to the MAC entity in the BS via the DSD Request (DSD-REQ) message. The BS checks the validity of the request, and if it is valid it terminates the connection.

If the primitive is generated on the BS side, it has already been validated and the BS MAC informs the SS by issuing a DSD-REQ message.

C.1.1.1.7 MAC_TERMINATE_SERVICE FLOW.indication

C.1.1.1.7.1 Function

This primitive is issued by a the MAC entity on the noninitiating side to request the termination of a connection in response to the receipt of a DSD-REQ message.

C.1.1.1.7.2 Semantics of the service primitive

The parameters of the primitive are as follows:

```
MAC_TERMINATE_SERVICE FLOW.indication
        (
        SFID
        )
```

The SFID parameter specifies which service flow is to be terminated.

C.1.1.1.7.3 When generated

This primitive is generated by the MAC when it receives a DSD-REQ message to terminate a connection, or when it finds it necessary for any reason to terminate a connection.

C.1.1.1.7.4 Effect of receipt

If the protocol was initiated by the SS, when it receives this primitive, the BS checks the validity of the request. In any case, the receiving CS returns the MAC_TERMINATE_SERVICE FLOW.response primitive and deletes the SFID from the appropriate polling and scheduling lists.

C.1.1.1.8 MAC_TERMINATE_SERVICE FLOW.response

C.1.1.1.8.1 Function

This primitive is issued by a CS entity in response to a request for the termination of a connection.

C.1.1.1.8.2 Semantics of the service primitive

The parameters of the primitive are as follows:

```
MAC_TERMINATE_SERVICE FLOW.response
        (
        SFID,
        response code,
        response message
        )
```

The SFID is returned to the requesting entity.

The response code indicates success or the reason for rejecting the request.

The response message provides additional information to the requester, in TLV format.

C.1.1.1.8.3 When generated

This primitive is generated by the CS entity when it has received a MAC_TERMINATE_SERVICE FLOW.indication from its MAC.

C.1.1.1.8.4 Effect of receipt

The receipt of this primitive causes the MAC to pass the message to the initiating side via the DSD Response (DSD-RSP) message. The initiating MAC in turn passes the CONFIRM primitive to the requesting convergence entity. The convergence entity shall no longer use this CID for data transmission.

C.1.1.1.9 MAC_TERMINATE_SERVICE FLOW.confirmation

C.1.1.1.9.1 Function

This primitive confirms to a convergence entity that a requested connection has been terminated.

C.1.1.1.9.2 Semantics of the service primitive

The parameters of the primitive are as follows:

```
MAC_TERMINATE_SERVICE FLOW.confirmation
        (
        SFID,
        response code,
        response message
        )
```

Parameters: see MAC_TERMINATE_SERVICE FLOW.response.

C.1.1.1.9.3 When generated

This primitive is generated by the MAC entity when it has received a DSD-RSP message.

C.1.1.1.9.4 Effect of receipt

The receipt of this primitive informs the convergence entity that a connection has been terminated. The convergence entity shall no longer use this CID for data transmission.

C.1.1.1.10 MAC_DATA.request

C.1.1.1.10.1 Function

This primitive defines the transfer of data to the MAC entity from a CS SAP.

C.1.1.1.11 Semantics of the service primitive

The parameters of the primitive are as follows:

```
MAC_DATA.request
        (
        Connection ID,
        length,
        data,
        discard-eligible flag
        encryption flag
        )
```

The Connection ID parameter specifies the connection over which the data is to be sent; the service class is implicit in the Connection ID parameter.

The length parameter specifies the length of the MAC SDU in bytes.

The data parameter specifies the MAC SDU as received by the local MAC entity.

The discard-eligible flag specifies whether the MAC SDU is to be preferentially discarded by the scheduler in the event of link congestion and consequent buffer overflow.

The encryption flag specifies that the data sent over this connection is to be encrypted, if ON. If OFF, then no encryption is used.

C.1.1.1.11.1 When generated

This primitive is generated by a CS whenever a MAC SDU is to be transferred to a peer entity or entities.

C.1.1.1.11.2 Effect of receipt

The receipt of this primitive causes the MAC entity to process the MAC SDU through the MAC and to pass the appropriately formatted PDUs to the PHY TCS for transfer to peer MAC entities, using the CID specified.

C.1.1.1.12 MAC_DATA.indication

C.1.1.1.12.1 Function

This primitive defines the transfer of data from the MAC to the CS. The specific CS to receive the indicate message is implicit in the CID.

C.1.1.1.12.2 Semantics of the service primitive

The parameters of the primitive are as follows:

```
MAC_DATA.indication
        (
        Connection ID,
        length,
        data,
        reception status,
        )
```

The Connection ID parameter specifies the connection over which the data was sent.

The length parameter specifies the length of the data unit in bytes.

The data parameter specifies the MAC SDU as received by the local MAC entity.

The reception status parameter indicates transmission success or failure for those PDUs received via the MAC_DATA.indication.

C.1.1.1.12.3 When generated

This primitive is generated whenever an MAC SDU is to be transferred to a peer convergence entity or entities.

C.1.1.1.12.4 Effect of receipt

The effect of receipt of this primitive by a convergence entity is dependent on the validity and content of the MAC SDU. The choice of CS is determined by the CID over which the MAC SDU was sent.

C.1.1.2 MAC service stimulation of DSx messages

This subclause describes the logical interaction between the MAC Service primitives and the DSx messages.

The sequence of logical MAC SAP events and the associated actual MAC events effecting a CS-stimulated connection creation are shown in Figure C.2.

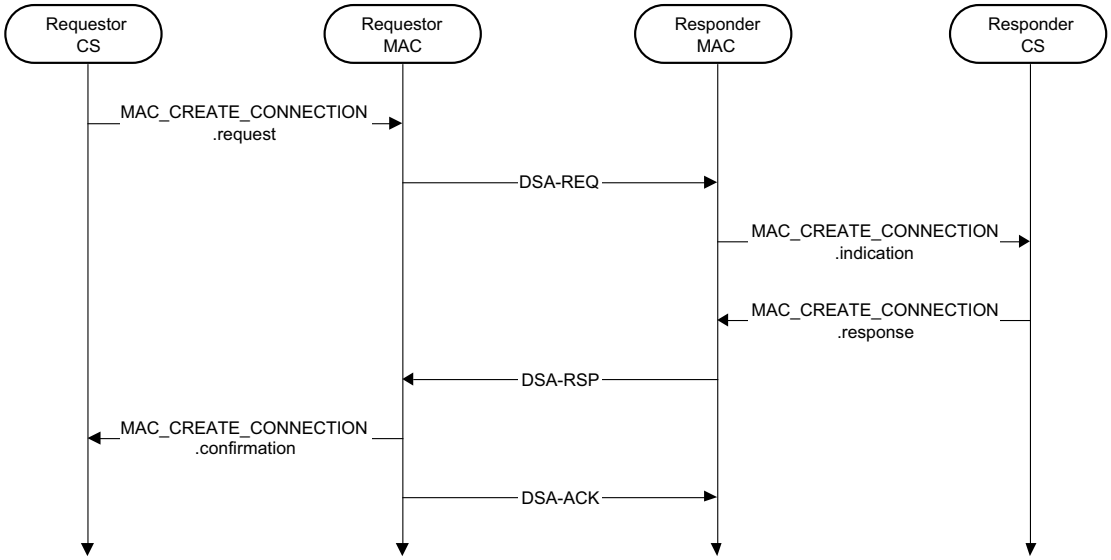

Figure C.2—MAC SAP event and MAC event sequence for connection creation stimulated by CS

The sequence of logical MAC SAP events and the associated actual MAC events effecting a CS-stimulated connection change are shown in Figure C.3.

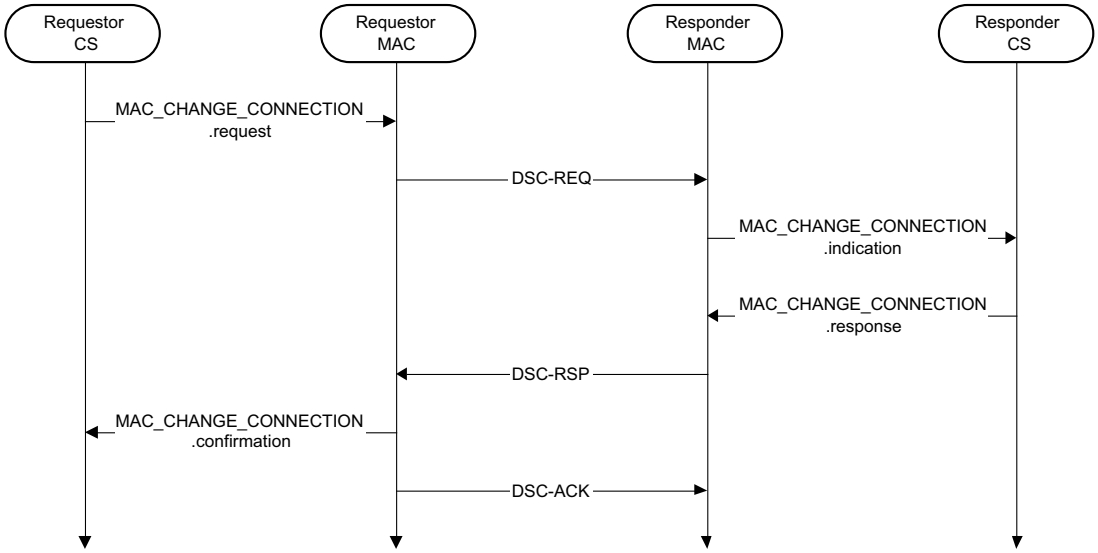

Figure C.3—MAC SAP event and MAC event sequence for connection change stimulated by CS

The sequence of logical MAC SAP events and the associated actual MAC events effecting a CS-stimulated connection deletion are shown in Figure C.4.

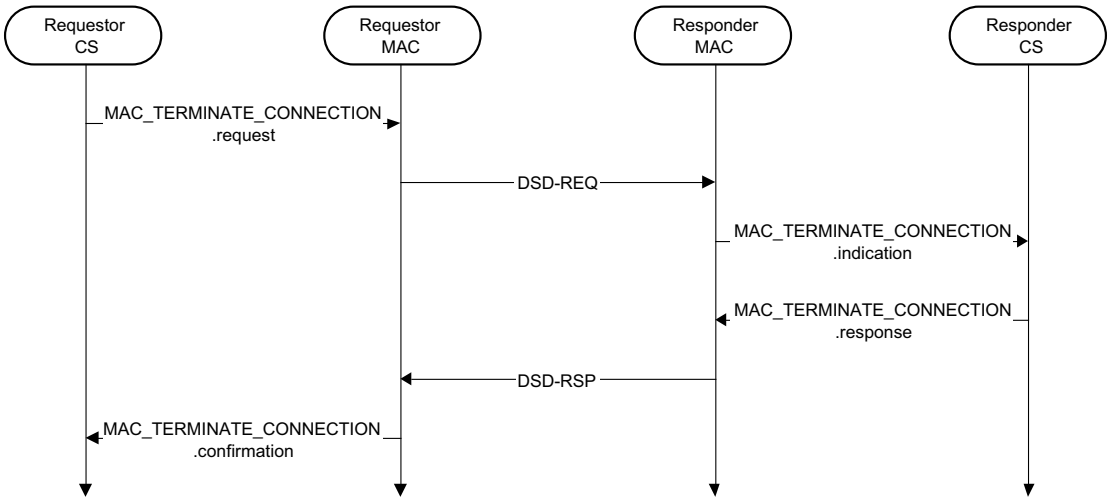

Figure C.4—MAC SAP event and MAC event sequence for connection deletion stimulated by CS

Annex D

(informative)

Messages sequence charts (MSCs)

This annex provides example MSCs for the procedures of HO and sleep mode operations.

D.1 HO MSCs

D.1.1 Neighbor BS advertisement and scanning

Figure D.1 through Figure D.6 describe the example message flows for neighbor BS advertisements and scanning of neighbors by the MS request, BS request, and periodic scanning of neighbors during HO.

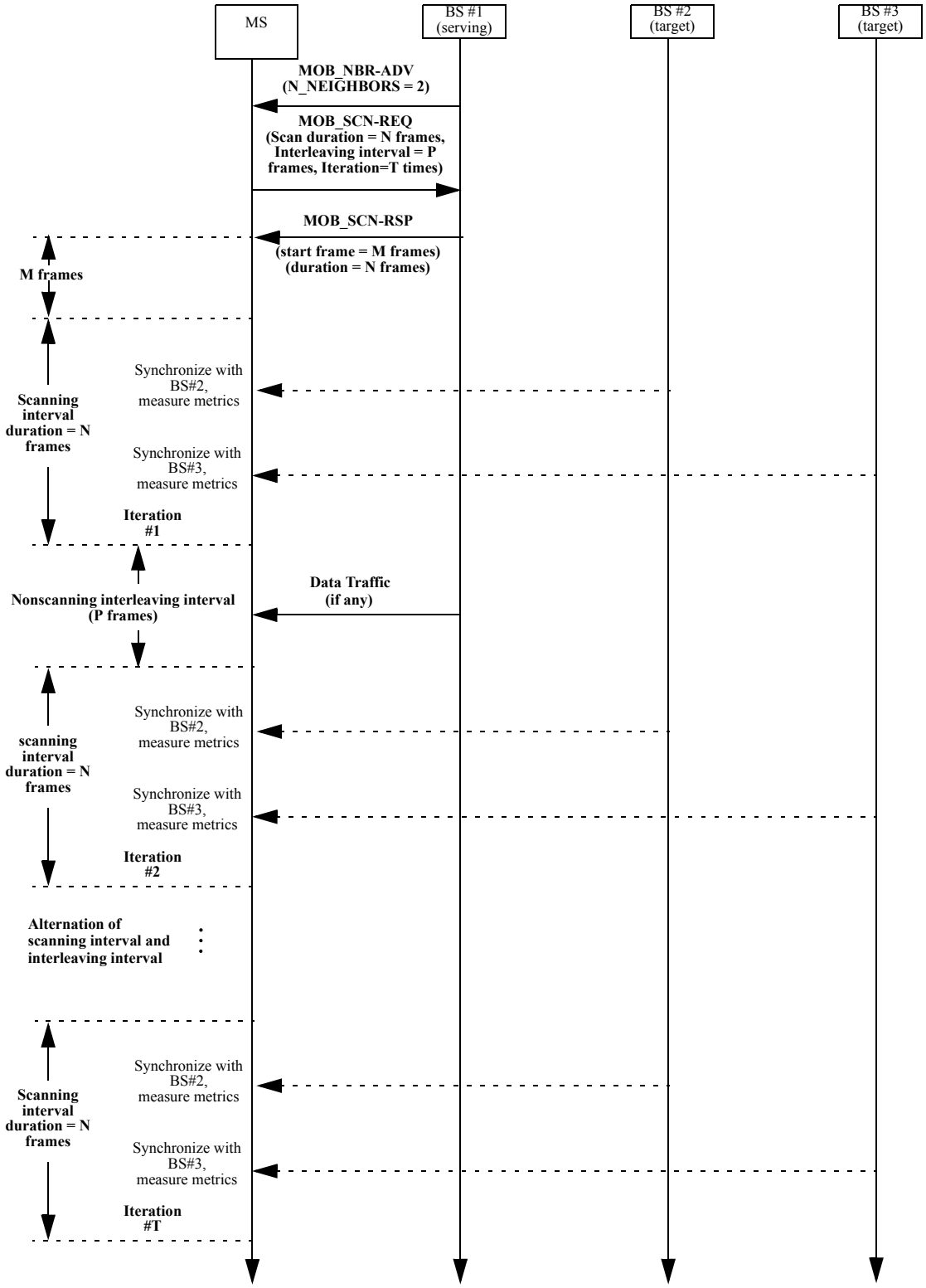

Figure D.1—Example Neighbor BS advertisement and scanning (without association) by MS request

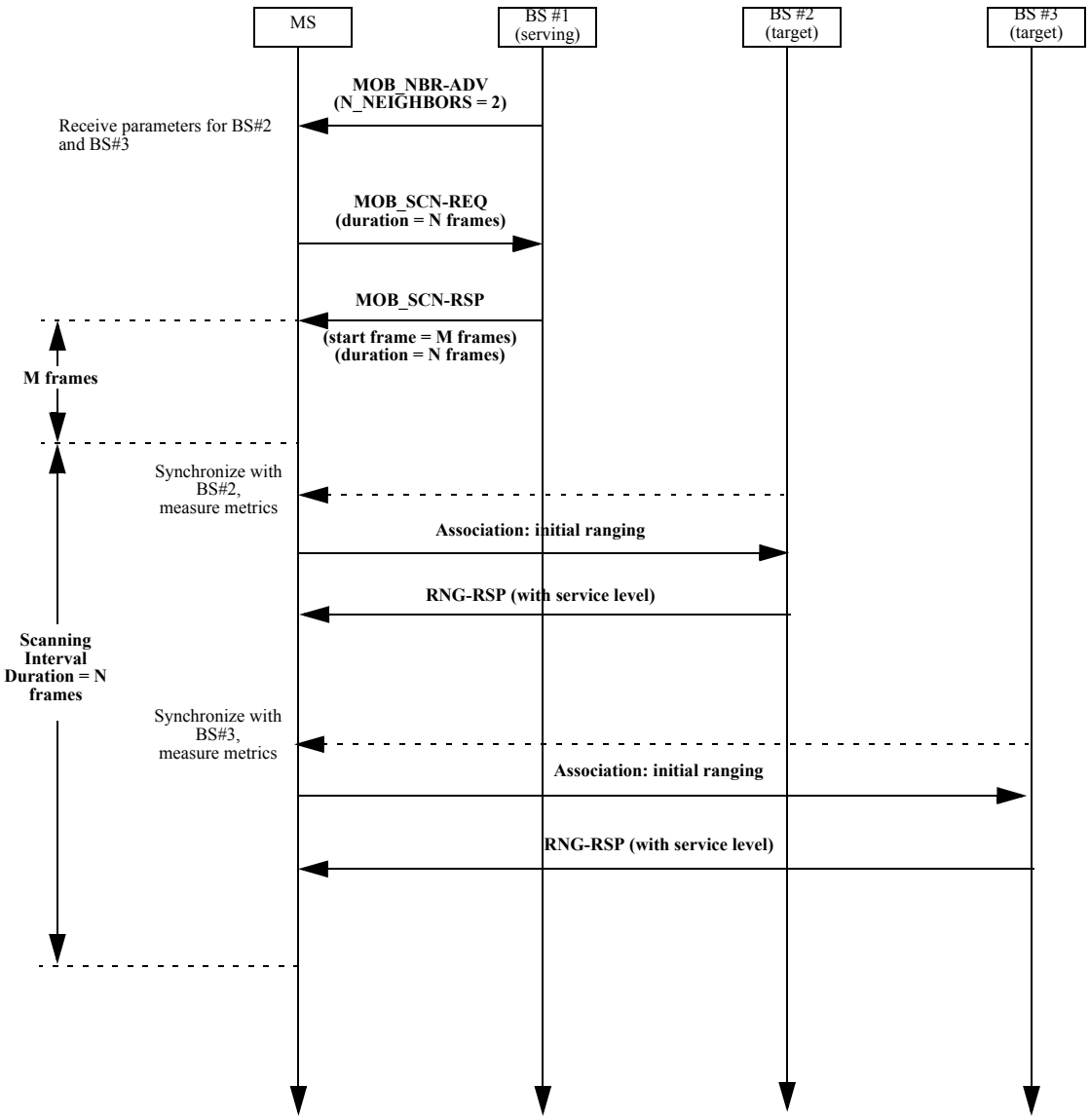

Figure D.2—Example Neighbor BS advertisement and scanning (with noncoordinated association) by MS request

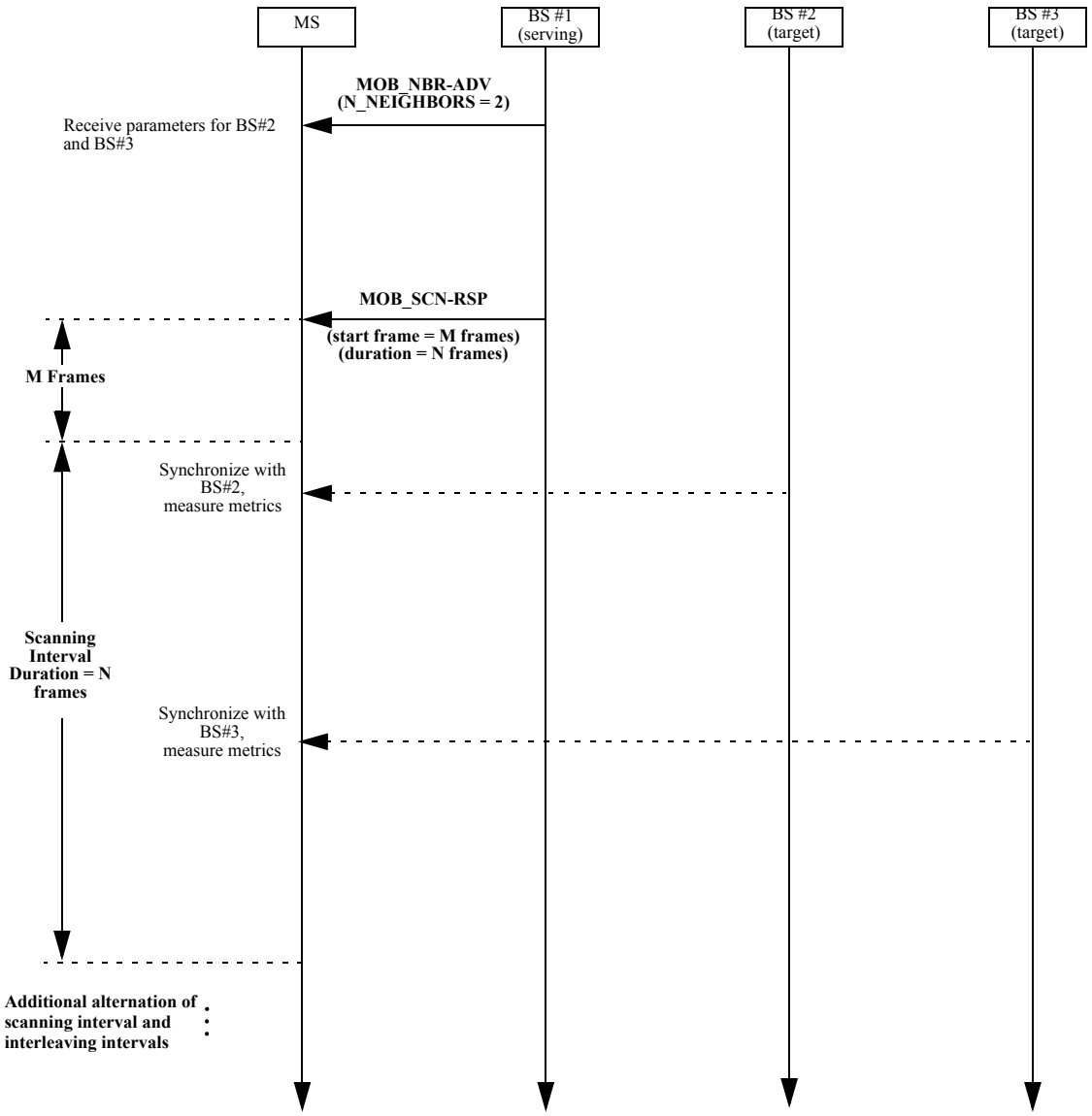

Figure D.3—Example Neighbor BS advertisement and scanning (without association) by BS request

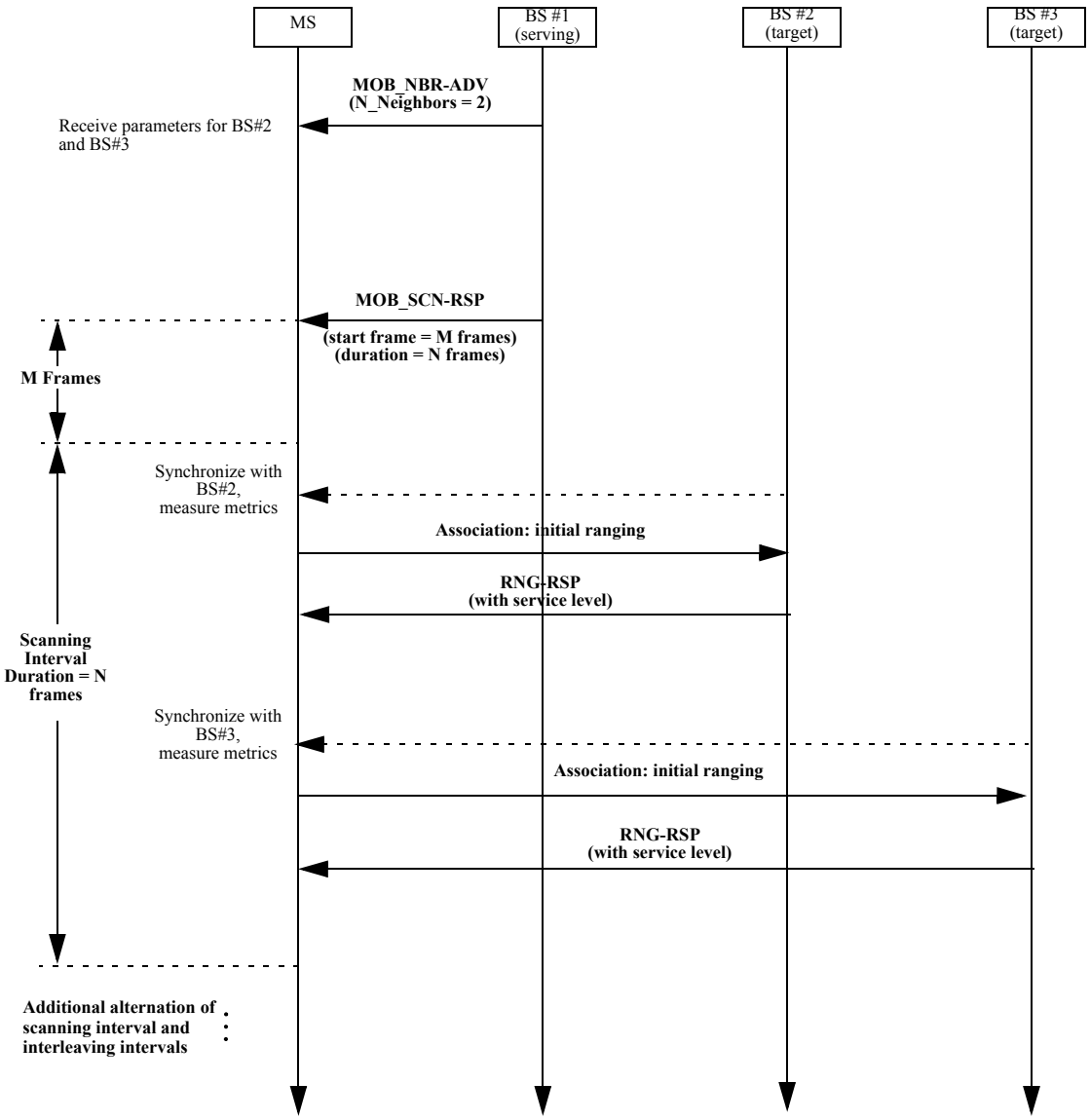

Figure D.4—Example Neighbor BS advertisement and scanning (with association) by BS request

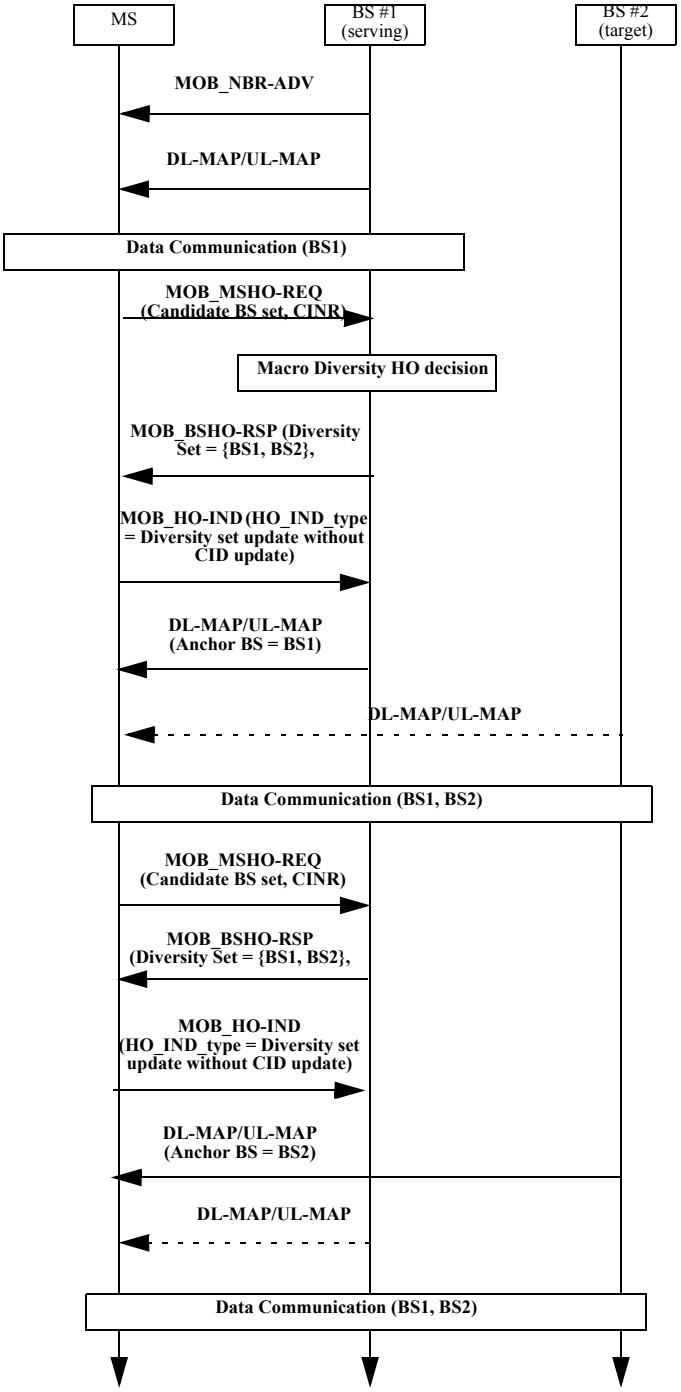

Figure D.5—Example macro diversity HO (diversity set update: add)

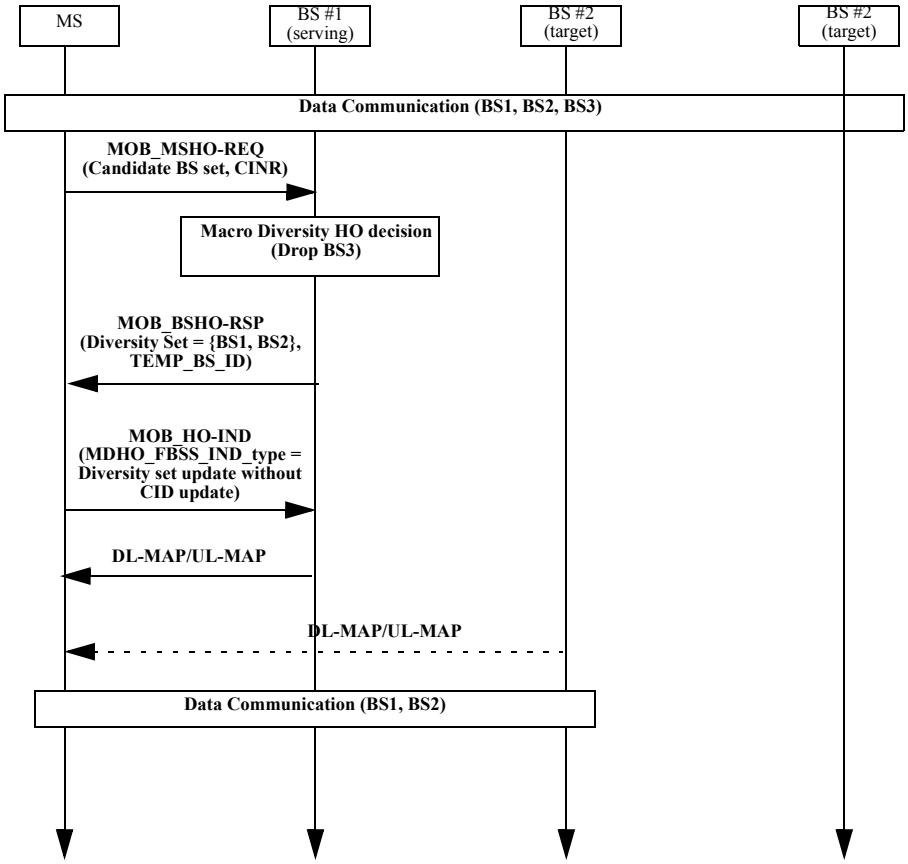

Figure D.6—Example macro diversity HO (diversity set update: drop)

D.2 Sleep mode MSCs

Figure D.7, Figure D.8, and Figure D.9 describe the example message flows for sleep mode initiated by an MS, sleep mode initiated by a BS, and sleep mode awakening initiated by an MS, respectively.

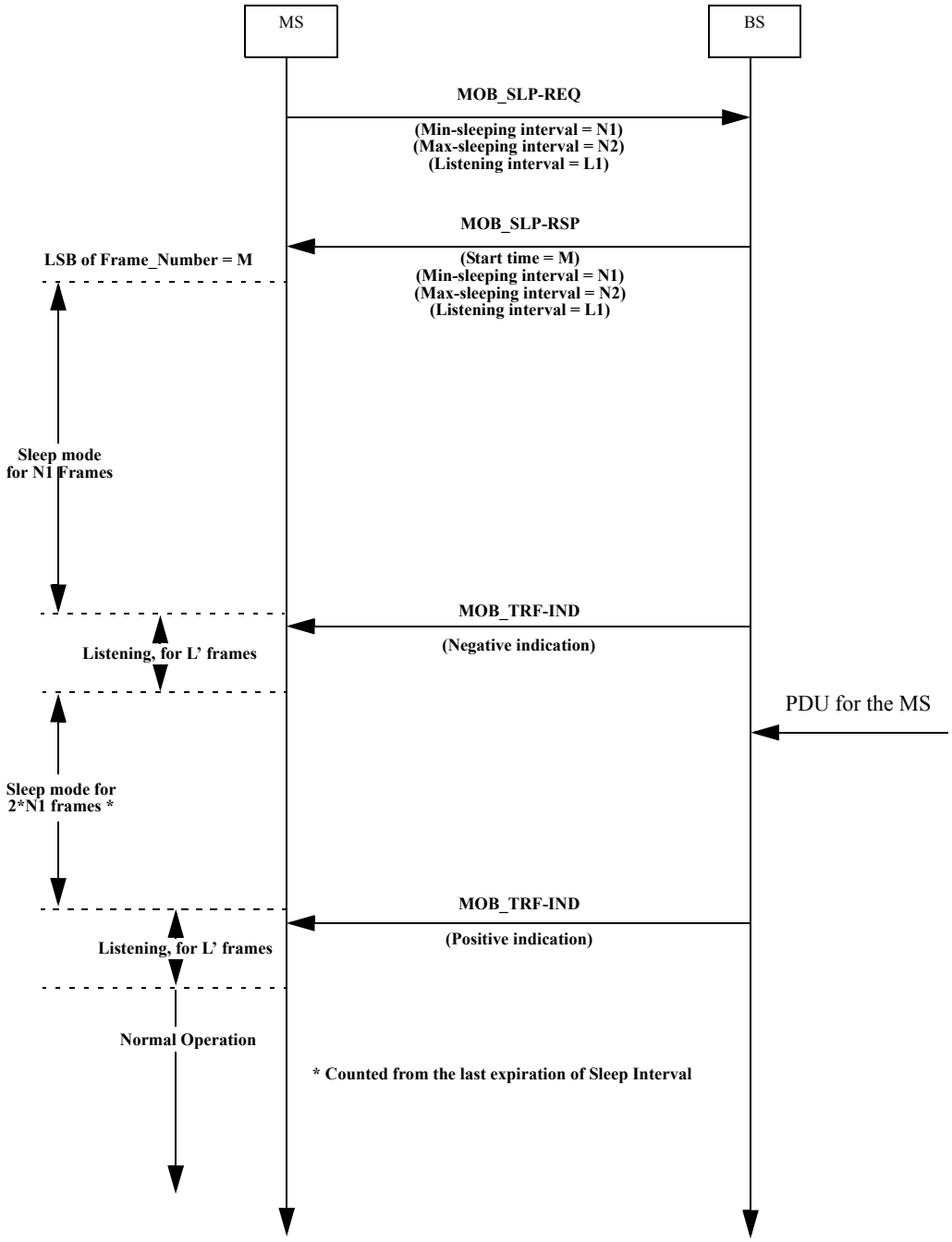

Figure D.7—Example sleep mode—MS-initiated in the case of TRF_IND_ required = and Traffic_Triggered_wakening_flag = 1

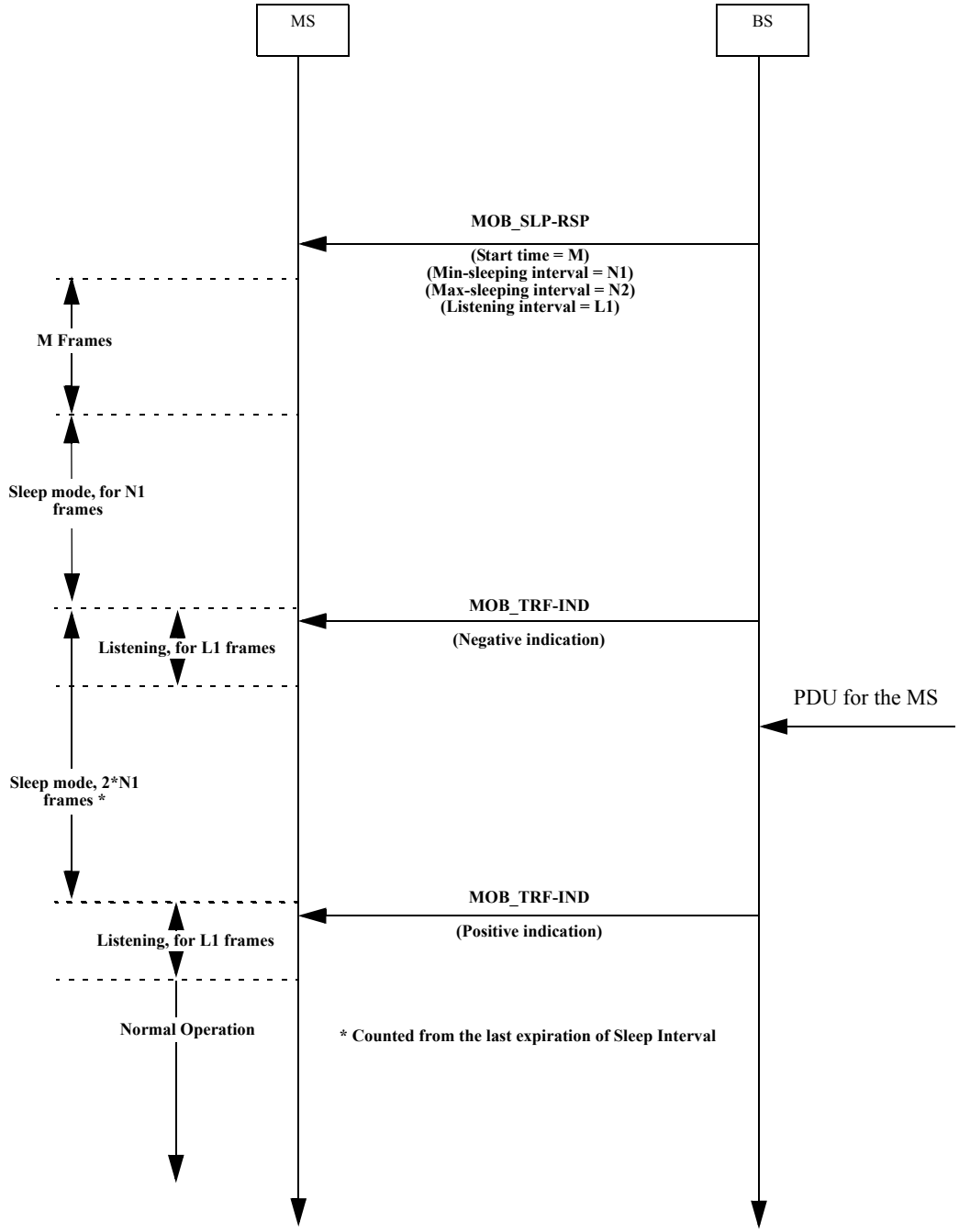

Figure D.8—Example sleep mode—BS-initiated for the case of TRF_IND = 1 andTraffic_triggering_wakening_flag = 1

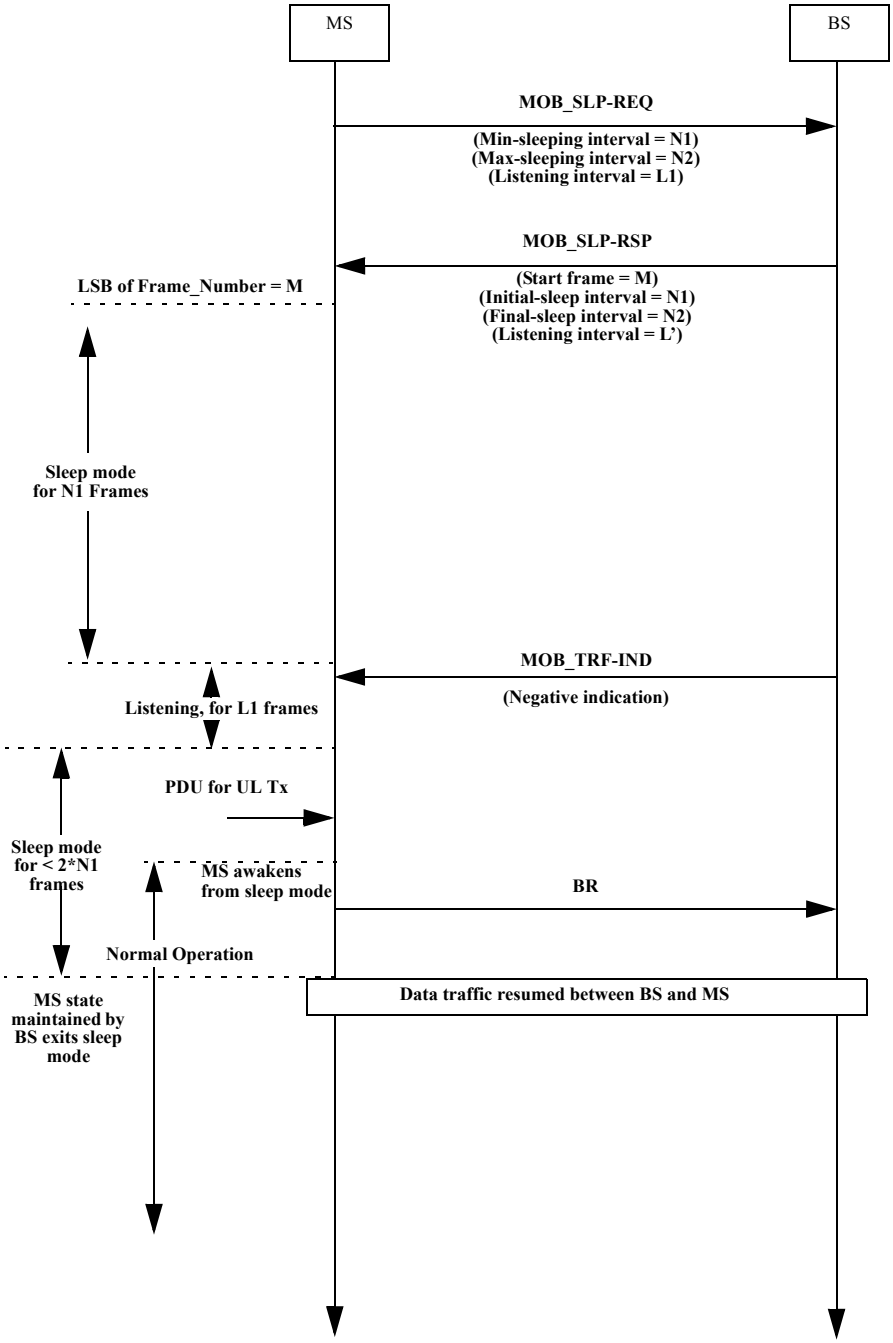

Figure D.9—Sleep mode—MS-initiated awakening

Annex E

(informative)

HO block diagrams

E.1 HO initiated by MS

Figure E.1 and Figure E.2 provide example block diagrams for HO procedures initiated by an MS.

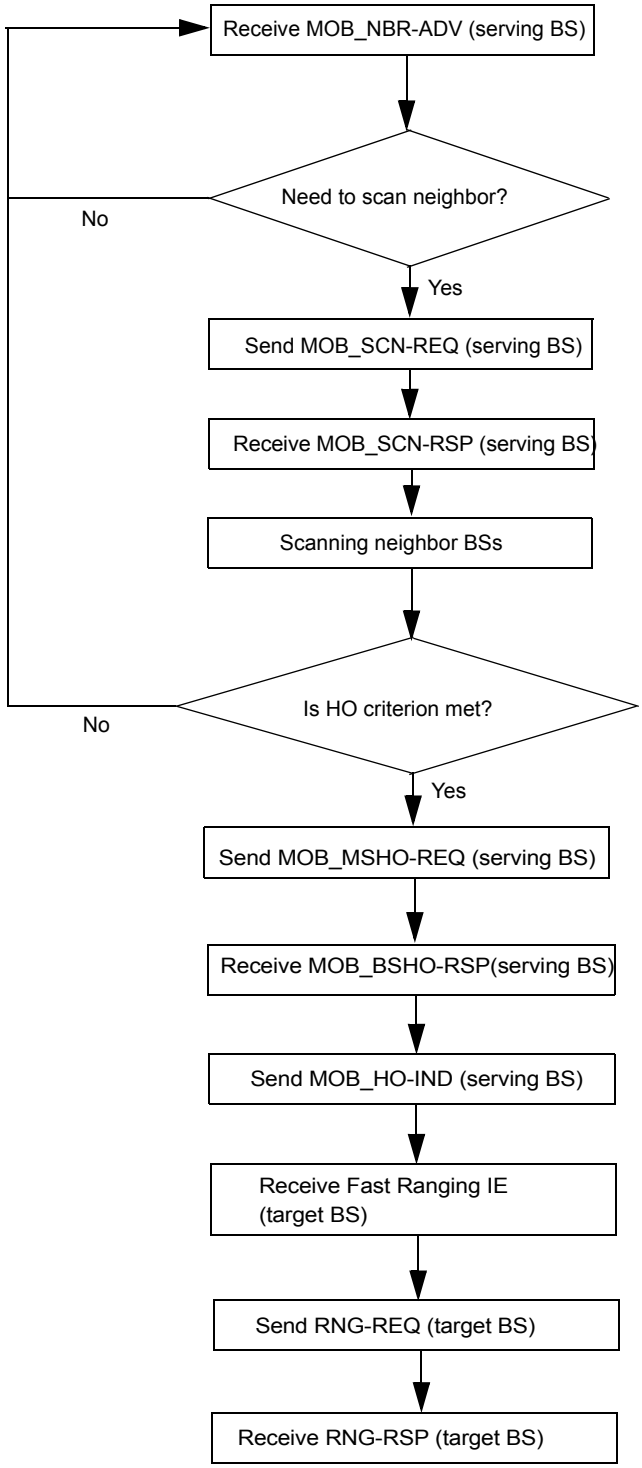

Figure E.1—MS-initiated HO process block diagram as seen by MS

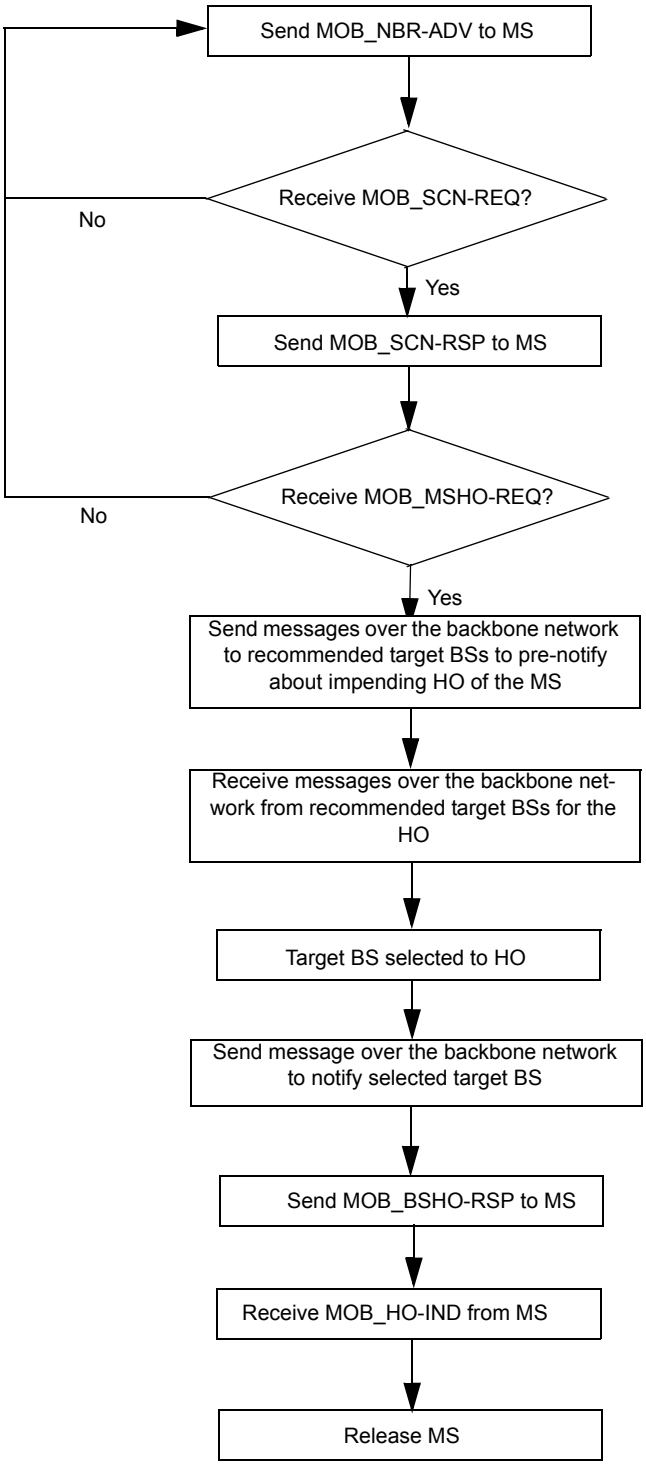

Figure E.2—MS-initiated HO process block diagram as seen by serving BS where final target BS is selected by serving BS

E.2 HO initiated by BS

Figure E.3 and Figure E.4 provide example block diagrams for HO procedures initiated by a BS.

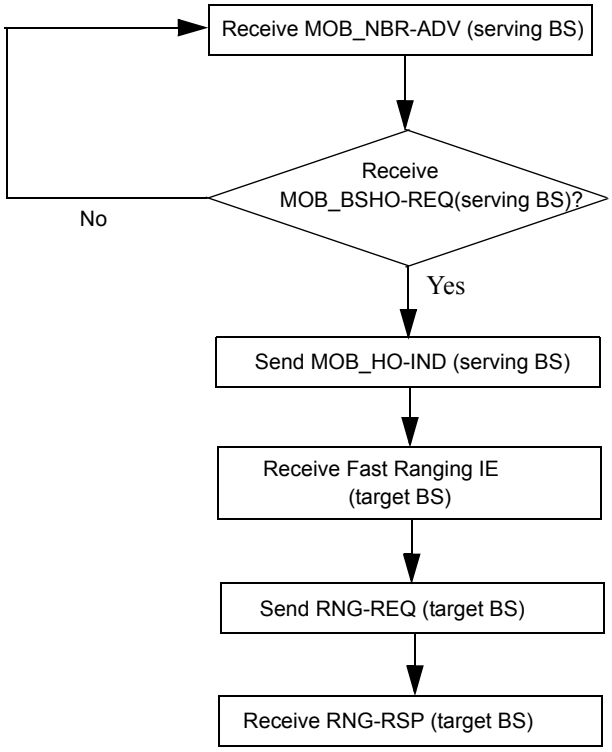

Figure E.3—BS-initiated HO process block diagram as seen by MS

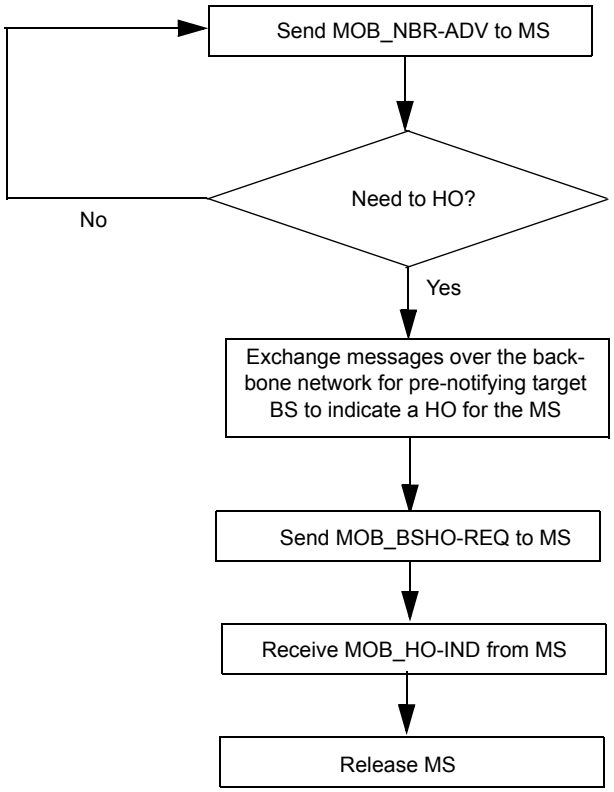

Figure E.4—BS-initiated HO process block diagram as seen by serving BS

Annex F

(informative)

Test vectors

F.1 Cryptographic method test vectors

F.1.1 AES CTR mode known answer test for variable text

F.1.1.1 TEST vector

F.1.1.1.1 Test 1

PLAIN TEXT: 64 bytes

```
d8 65 c9 cd ea 33 56 c5 48 8e 7b a1 5e 84 f4 eb
a3 b8 25 9c 05 3f 24 ce 29 67 22 1c 00 38 84 d7
9d 4c a4 87 7f fa 4b c6 87 c6 67 e5 49 5b cf ec
12 f4 87 17 32 aa e4 5a 11 06 76 11 3d f9 e7 da
```

Roll-over-counter: 1 byte

```
00
```

PHY Synchronization: 3 bytes

```
ffffff
```

Counter: 16 bytes

```
00 ff ff ff 00 ff ff ff 00 ff ff ff 00 ff ff ff
```

Key: 16 bytes

```
00 00 00 00 00 00 00 00 ff ff ff ff ff ff ff ff
```

CIPHER TEXT: 64 bytes + 1 byte(Roll-over-counter)

```
00 65 e1 16 74 b6 2e 38 bc ad 88 b4 d8 30 7e 44
2b cb 5d 66 ee 5c 1c 82 ca 3d cf 21 db 90 c9 13
b4 25 10 f4 d1 41 1e 04 8a 60 99 cf 02 32 d4 fe
24 db 28 78 f0 fb 1c b6 c8 b5 41 63 6d e9 a6 1b
15
```

DECRYPT TEXT: 64 bytes

```
d8 65 c9 cd ea 33 56 c5 48 8e 7b a1 5e 84 f4 eb
a3 b8 25 9c 05 3f 24 ce 29 67 22 1c 00 38 84 d7
9d 4c a4 87 7f fa 4b c6 87 c6 67 e5 49 5b cf ec
12 f4 87 17 32 aa e4 5a 11 06 76 11 3d f9 e7 da
```

F.1.1.1.2 Test 2

PLAIN TEXT: 256 bytes

```
45 8b 61 c3 84 ab 89 0b 71 ef ef b9 49 be a4 5b
b1 2b 71 e2 d5 55 3b e5 5a b0 f5 97 a9 dc 71 ed
66 d1 b0 ea 7c 38 f4 ec 26 e2 a5 6f 9f 48 ca 4f
73 3a 31 47 8f 6b 2c e9 1b 21 7f c3 fd f0 b0 63
c0 5f 4c 3c 96 3f 28 bc 21 cc 2b bf 14 f4 0e 86
2e 3e cd bc a9 f8 a4 c3 18 23 86 15 12 35 77 d2
93 c2 0e 29 00 35 e4 21 00 0e df 13 02 ed 99 2f
2a 65 ea d2 5c 8e 95 74 b0 1a 88 c2 4e ff 94 e1
c0 a2 0a c0 d6 ed e0 d5 fb bf e8 fc ab 80 2a d5
e4 14 a7 40 a2 3b b4 52 55 3c 13 a3 3a a7 83 f9
48 8c b9 1d 79 98 f2 74 57 da 70 01 59 9a d6 3c
ad 7c 7c 4f b7 2f a0 0b 6a b3 ad a4 59 30 9c a1
bc 55 be 34 ec b0 a8 42 89 17 43 e1 b0 18 1d 5d
94 98 ab 4a c7 4a 55 31 fc 01 d4 55 31 70 f6 ec
c4 b3 20 b0 63 c7 f2 eb dd 35 cc 8d 4d e8 e9 e0
80 94 2a 47 de 7f 77 da 7f 4b 2f b0 bb 24 9b 7f
```

Roll-over-counter: 1 byte

```
00
```

PHY Synchronization: 3 bytes

```
ffffff
```

Counter: 16 bytes

```
00 ff ff ff 00 ff ff ff 00 ff ff ff 00 ff ff ff
```

Key: 16 bytes

```
00 00 00 00 00 00 00 00 ff ff ff ff ff ff ff ff
```

CIPHER TEXT: 256 bytes + 1 byte(Roll-over-counter)

```
00 f8 0f be 7a d8 b6 e7 72 94 e9 20 c0 27 44 14
9b d9 ce 32 90 8c 76 9d e1 4e 18 f6 50 39 2d e6
8e de 8d e0 bc 42 dc bb a0 c1 bd 0d 88 e4 c7 fb
87 ba e6 ce a0 46 dd 7e 7b bf 66 6a bf 29 af 4c
ac ec 7b ca 8c 91 41 41 f5 18 98 be 04 ec 83 7b
b3 1e 08 65 93 d9 74 fb c2 58 c4 d1 e9 17 fa a8
08 09 a9 21 24 a5 f8 c1 90 89 8e b8 e1 18 28 aa
e8 da 8c c4 bd 0a 5c f8 36 bd 5c da 33 3b 72 d9
52 f7 ba 62 94 9b 2c 9a 27 34 b5 c9 6b 0a 69 9a
44 3f bf a7 a4 a2 cb 4b ab 95 2f e8 b8 94 19 e9
6f e1 d9 00 cd 60 e7 2b 38 db a6 86 4e f0 83 fe
13 1a c2 d2 33 2f 8d 30 fa bb bd 0e c6 26 e4 55
e4 37 a4 78 62 33 4d f4 07 53 f2 a6 26 8b 15 94
55 ca a5 da 0d 4a eb f6 6d e5 bf 10 b9 28 17 83
49 1f 80 3c 50 56 68 0a 40 08 86 b1 8e ec 48 01
```



```
38 33 9c c7 4c 68 aa c9 a3 8d 28 57 8e eb 62 39
c0
```

DECRYPT TEXT: 256 bytes

```
45 8b 61 c3 84 ab 89 0b 71 ef ef b9 49 be a4 5b
b1 2b 71 e2 d5 55 3b e5 5a b0 f5 97 a9 dc 71 ed
66 d1 b0 ea 7c 38 f4 ec 26 e2 a5 6f 9f 48 ca 4f
73 3a 31 47 8f 6b 2c e9 1b 21 7f c3 fd f0 b0 63
c0 5f 4c 3c 96 3f 28 bc 21 cc 2b bf 14 f4 0e 86
2e 3e cd bc a9 f8 a4 c3 18 23 86 15 12 35 77 d2
93 c2 0e 29 00 35 e4 21 00 0e df 13 02 ed 99 2f
2a 65 ea d2 5c 8e 95 74 b0 1a 88 c2 4e ff 94 e1
c0 a2 0a c0 d6 ed e0 d5 fb bf e8 fc ab 80 2a d5
e4 14 a7 40 a2 3b b4 52 55 3c 13 a3 3a a7 83 f9
48 8c b9 1d 79 98 f2 74 57 da 70 01 59 9a d6 3c
ad 7c 7c 4f b7 2f a0 0b 6a b3 ad a4 59 30 9c a1
bc 55 be 34 ec b0 a8 42 89 17 43 e1 b0 18 1d 5d
94 98 ab 4a c7 4a 55 31 fc 01 d4 55 31 70 f6 ec
c4 b3 20 b0 63 c7 f2 eb dd 35 cc 8d 4d e8 e9 e0
80 94 2a 47 de 7f 77 da 7f 4b 2f b0 bb 24 9b 7f
```

F.1.1.1.3 Test 3

PLAIN TEXT: 1500 bytes

```
d7 ba 2e 39 80 20 24 5d 54 ef e9 a0 d7 d2 7f 56
65 a9 9c 43 27 13 1c a6 5e 4a 55 18 6e f0 96 44
a9 c4 7d 29 e3 a1 85 36 8f 6e d5 65 3f 54 bb a4
fd 57 e6 23 6a 02 c9 c7 4c 1e de b9 0d 73 fd b6
36 7a de 19 1a 63 4e a9 d0 22 0e 0e 76 c8 b2 72
1f 97 95 88 99 5d 4e e4 7b 2c 9d 87 9f 99 3c d5
12 1a ed 2c 7c 3a d4 4b 5c e1 59 d1 a9 0a 42 c8
a1 d7 4f 39 33 9d 1d ad c9 b9 34 67 51 70 3c 63
89 28 8f 04 62 62 4f bd 43 a7 8e ec b0 d0 b3 50
a6 02 89 d9 9f a5 85 67 5d b9 ce ae 28 09 11 b0
31 9f b4 92 01 02 4f 43 a8 dc 2f 58 ab e2 a8 51
e3 30 29 81 d5 ad e8 31 65 b5 df 8d be ef 3c ee
8e ef 7f 8e f1 cd d1 99 a9 ff f0 54 e0 97 a4 c3
c7 cc 44 9b 79 2b cc de e0 ab 6a 9d 99 a6 8a 26
95 09 b4 85 d6 84 1d 7e 83 0d d1 63 a4 74 25 6a
40 69 05 b8 93 d1 96 73 7b ff 10 14 a5 99 39 39
a2 ed bd 77 71 da f4 f3 e7 c5 56 8a 39 7b f4 78
e3 f8 30 76 c8 c5 e8 42 c3 f7 55 68 90 8e a0 31
7b 5d a8 eb 36 9c de 1d 60 33 a6 98 ae 99 10 90
91 3f 05 59 03 ed 9a c6 e4 ef 2d 73 7d cc a4 f8
28 4b e2 5e e7 c0 7a 46 f3 20 de a0 b8 ed 30 49
2b 34 a1 2e 21 3b f3 04 2a 1f 77 a7 eb 1a 9e 13
65 80 70 4c 3f ea 91 31 09 6f d1 c1 5c 00 0a 87
34 aa b4 54 e4 a6 58 0d c5 ce b3 af e8 51 c1 4d
d0 31 98 0e 1a 29 3f 23 97 0f e4 f3 0f ed 79 42
97 2c 96 7a d1 ee 87 96 bb 3a 44 a3 8a 05 ef 59
35 86 67 4f af a6 72 45 b5 56 37 c3 43 af 05 d9
```

```
db 9a 53 ab 87 da 41 42 13 84 e4 9d 88 d3 f6 bd
59 5d 0c 07 02 7d 4b b6 d2 82 78 15 31 7c ed 0c
16 3f b7 9d 18 f7 df 2b 7a c2 c8 02 95 bd bf ed
19 ca f3 1a 47 3e d0 19 c0 47 2d f1 c3 19 fc d9
58 b2 75 70 a8 53 9a 22 15 61 24 a9 1e e2 96 36
ac 88 50 f2 c5 20 0a 84 67 37 74 2a 4f 70 02 a7
21 77 16 c8 ca b0 ea df 11 0d 87 2e ee 1d 64 99
a4 b4 8b 69 d3 94 ec 39 cb 60 62 19 cf 64 c0 f0
da d5 b7 a3 85 a0 81 95 ac 08 c2 9a 24 25 33 c8
d9 bd 30 ab 51 1c e4 1b 7b 46 34 4a a9 f3 39 82
c8 f0 25 4c 90 a5 e0 3c ad a2 d6 d1 c6 08 98 9f
c4 c7 49 14 e2 2d 2e 5d 72 61 a6 1a 54 df 9c 1b
cf c0 67 5e 65 46 9a 12 e7 6f e2 ad 76 79 4b 3a
3f 94 4e 21 c0 7b 7d 32 dc 23 4c 30 01 e7 4a d0
a7 b1 2d 0c f6 c7 1d dd 36 ff 8a ab 78 d5 e5 b7
68 32 d7 28 ad 53 59 89 76 a4 b8 76 8b 02 45 32
b2 72 3d a8 39 5a 84 6e 58 0d 19 d0 e2 fd 86 49
2f 5c 71 db af ca 63 24 6e 1b 9a f8 1c df 29 ce
51 66 75 89 bf f9 f6 17 06 0e e6 e7 0b 6c 30 39
c8 a0 13 77 69 76 9b d6 91 34 ce ad 13 f7 7a 63
5c ef eb 1b e7 e1 32 ec ee 17 d3 f8 83 02 31 4a
a1 44 c0 0a b9 5a e0 49 8e ad f6 a0 a4 6f 03 ff
5e ed 1a 44 ce 4b 30 bb 62 02 b3 e4 03 e3 2e a4
26 ed ad df 47 8d 28 d5 3a 1d 74 dd 8c 77 dc e9
63 f5 2d 31 40 5d eb a1 5e 9e 85 61 81 b2 05 a7
9f b2 86 e6 3e ad ba 77 ca 2e 54 56 a4 2f 3f 07
24 6b 37 63 c8 22 04 26 bf 88 87 40 3a 8b e6 d9
3d 6b be 7b 18 77 f1 e2 a4 45 37 48 73 76 4e 97
e1 84 f9 a8 a5 fd cd 64 84 53 a3 be de 89 96 1a
f4 53 94 0c ca 85 ed 6e c9 24 b5 3c 99 03 d2 7a
86 cb 21 2b c7 ed 8f 4b 40 32 09 1d bb 9e 37 ae
f1 ca b9 bb 4f a6 28 18 c9 dd 53 62 df 25 db 64
ef fc 8f b6 e9 1e 01 28 4f 09 45 09 a6 7b b7 97
45 70 51 93 15 78 aa de 54 fd 40 32 21 1a 96 10
16 25 c5 fe 42 c5 25 91 cd 6a 9a 73 e4 50 0a 29
c0 5a bc d4 d2 65 b2 26 62 f1 58 82 0b ed 92 20
12 57 1d 53 1c 42 e4 e9 ac 7d 5b 90 cd 65 b8 8d
be 73 60 8f d8 12 b5 39 02 0c bb 0c f9 4c 2c 0a
a3 49 5d be 8a 40 a6 35 bd 01 c4 8a 65 7c 16 23
ee 76 b2 c5 87 66 fe 89 71 b8 95 69 04 c0 72 a6
08 cf 64 92 0f 09 c7 cb 0a 8b 55 6e 06 6a 91 f3
e0 42 b8 67 a7 b5 ef 17 6d 84 80 71 44 f2 17 4b
c0 7a dd ce 83 a3 99 8c 2d ee fa 33 58 8a 25 37
cb dd 9d 72 92 8c 89 ff 10 08 6f 53 fa 85 9d b9
ff 7a 87 81 1c 20 0c 49 0d 06 7b 64 8f a0 9b 5a
7d 38 cc 0e c4 54 0d d3 5c 7b 25 55 00 c2 0e ff
3b 95 7f 57 b4 8b a0 c1 90 1b 25 1f ba c0 79 37
f7 44 45 ba 98 51 8d f3 cc b1 47 cc 73 54 ca ae
e9 48 05 9c d2 a4 5d 62 be 82 81 78 41 f9 ae 38
3d f2 f1 d4 43 7e c6 0e 2e 0d d9 a1 61 a2 4e 49
e9 52 e5 bb f5 42 1c b3 c3 9c 2b 04 95 d9 3b d1
ca 2b a5 0c a8 6a 1a d6 77 f2 76 d7 93 c4 20 7c
15 04 37 0a 45 53 bd 08 ef e7 0b 83 bf 45 54 89
70 f8 95 18 62 ae ee d9 a0 64 b0 33 27 cf af 3c
```



```
d3 e5 45 18 37 01 1f 26 e8 29 a9 a6 6e fc 2f dd
f4 c3 f5 56 71 e2 2e 10 45 dd 42 6b ac f0 a6 7e
d5 eb 95 0c ec b4 31 d3 dd da 79 4a d6 a7 27 c9
69 1b 1f da fd 4c e9 41 29 2b ac d4 1a 52 52 ef
3d e6 fa 28 99 2b fb 75 04 73 bf d9 19 e5 a2 82
00 c0 5c fc 0c 44 3d 35 6e e8 08 88 3a 59 76 76
3f 70 9d d8 9b 97 4c 9e 09 0a 77 22 ef 18 a4 ee
d8 ff e9 e3 43 25 17 b1 0d 1f 38 46 78 ae bb b7
1e 57 8e b8 ee d9 56 f7 e3 cc 19 d1 e4 bd bf bb
bc a8 9e fe cc b5 ae d9 d3 e6 1e 4b 93 d9 01 b0
30 8e 68 1d 67 bd 14 49 88 2c 1a 6b e8 d8 25 a4
7f c3 a1 4b 77 4f 24 4a 34 42 94 c6 1a 95 76 4a
23 de 67 89 9a 7a d2 22 a6 ec 8c 8e
```

Roll-over-counter: 1 byte

```
00
```

PHY Synchronization: 3 bytes

```
ffffff
```

Counter: 16 bytes

```
00 ff ff ff 00 ff ff ff 00 ff ff ff 00 ff ff ff
```

Key: 16 bytes

```
00 00 00 00 00 00 00 00 ff ff ff ff ff ff ff ff
```

CIPHER TEXT: 1500 bytes + 1 byte(Roll-over-counter)

```
00 6a 3e f1 80 dc 3d 4a 24 b1 e9 26 d9 b9 28 cf
96 0d 4c df 31 7e 30 ba a2 4a e2 56 df fe 01 01
27 11 98 2d 7f dd 45 ca 7a 68 31 7d 82 44 db 8a
6c 34 8b 19 c4 a3 b4 9b 55 e8 59 cb c5 d9 2c 01
79 1a 5e 58 a9 1d 1d 27 e0 e9 76 9b b5 8e bf c7
47 2f a1 3d a7 e9 d1 11 e5 3b cb ca 7b 9a 56 e3
0f 88 71 c2 21 d9 f7 f1 fa d5 61 3e 23 b3 cf 71
0f 51 3e 61 56 65 4f 70 ef c4 ff 66 96 24 fd 71
d0 be 30 e7 50 2f a3 35 4f 8c ad af 7b 11 39 03
c1 7d a9 89 3d 9f 55 7a 9e 9d aa 35 b5 86 b7 7b
26 98 ca 0d 42 18 7d 96 0f 24 a0 d9 17 02 fb 80
7e 54 8e 87 fd 4d 0f 78 c0 b4 bb 7c ef c1 3b f5
ab 05 1e b9 d8 2e 30 8d dc 73 1a 15 93 db 9a 2d
cb 99 f1 35 dc f4 8a 6f 82 f9 15 ae 71 80 c1 ff
83 4e 3a a8 65 e3 2b e5 d5 56 be ac 60 05 d4 cd
b2 f3 61 e8 b3 25 04 28 0a 89 9c 68 2a f5 df 9b
86 fb 5d aa 90 d1 af 43 06 c0 9f d4 9d 1c 0d cb
c9 d2 ef 3e bc 9c 92 a4 61 36 b8 f6 4b d7 6d 8f
2e d3 ec 87 40 9d 19 a0 e4 10 f7 74 76 7d f1 60
4b 98 70 ce 5d aa 28 0e 42 dc 4e a3 86 0d 30 5f
f6 2f 6a b8 a0 c3 f7 85 56 58 53 d4 e0 16 a8 be
09 0a d9 d9 1f ab 02 b9 94 74 75 1c f4 ca 6d 75
```

```
93 4f 08 1c b6 46 46 ff 97 c2 c0 af 64 39 a3 4c
e1 90 74 6d d0 a8 2b 75 0f 21 a5 3b ad 95 6f 42
c2 9d 23 19 e4 f3 3f 45 c2 eb c5 bd 2c 75 5f 77
d9 01 0f ef e9 01 53 2e 34 17 21 ba 5a d8 bc 60
1a f2 32 e1 f2 88 fc a2 ac 55 7d 47 b2 1b cf cd
79 c1 9a ac 24 19 e0 5e 56 f8 db c3 3b c9 aa f4
fd 19 80 83 2a 59 4a c6 5e f8 40 13 00 d9 77 5c
4a ca b0 5b 53 de 4c a0 3d 96 04 60 d8 bf d5 a3
f9 da 41 ed 8e 0b e9 a8 52 40 46 c1 21 78 4e 04
5b 0b 20 ad 4b 23 32 51 8e e7 b2 ac a1 51 c8 4d
0f e0 cd e5 64 16 71 df 64 76 1d 51 71 02 a2 76
66 38 01 46 87 ec 44 6f 1d 44 f5 8b 7b 7e 63 14
4b 29 2b 8d fc a6 3e 14 75 b8 a8 27 23 b3 f2 1c
79 a8 2f 2b 3b 69 3e d9 0d 74 1a 32 c6 b0 98 86
18 3f 9f a2 c0 a5 bb b8 85 61 7b 0d 23 47 e4 39
0f 53 cf 9c 19 34 55 3c de 0e 24 ed 07 6c e9 d3
7d 91 aa 32 33 5a df 42 90 55 63 eb cf f7 b8 62
9b 40 2a 3c e8 06 ef 84 50 da 51 fc 82 26 63 fb
c2 58 44 d6 1b 56 db 52 d9 7f c0 36 63 8f 70 2a
6e be ee 72 23 40 3e db 47 96 d3 eb 4c 9e dc cf
db f5 70 dd 01 ec a6 93 95 f0 91 06 c4 6f 74 5e
c7 cd 74 e7 45 53 af 92 c3 96 f3 4d 10 85 b2 11
4f cc 19 b0 a6 11 f5 ac 5a 2b 2b 96 44 3d 35 b4
3a ad 66 32 d6 b5 66 4a 55 2f aa df a2 2d d9 0e
e3 90 90 dd 0b 09 5a 3a 27 24 98 ff 27 2b 45 0e
f4 22 42 1c f2 4a 2d 00 98 b5 ea 88 87 a9 fe 8d
58 8a 4e 64 85 82 13 d1 13 43 66 b4 91 85 20 8d
b7 e2 a5 20 17 02 78 f7 19 a0 b4 74 a2 80 ec 5f
8d 47 7c 23 7f df 35 df d4 ad c8 ac 9a e5 df 6e
e0 5c 81 ce 6a 6c 75 b1 07 09 b7 f0 97 73 82 56
93 e6 fe 5d b1 8e 85 08 f3 df 53 50 4d 3c 12 71
45 50 45 47 c1 64 f0 09 38 26 3d 56 e6 ed de 71
17 28 3b 51 08 c0 e9 d1 13 ae 7c ff 82 73 0b ee
ae 8d 3d a1 e2 47 a4 0c 66 67 83 61 6e 1a 49 7f
d6 9d d0 21 70 fc 99 f5 f0 0c 0f 1a 5e b6 94 ac
4a 7d f6 f1 89 dd 49 2d f9 0f 1c 21 ae 8c 5c c3
0c 38 3e 24 9d 32 9f 4a 0c a6 83 93 f1 e5 1c 4e
c3 a2 5d 77 95 51 60 7b e5 09 eb 4c b7 5b 1b 7f
09 89 e0 63 5c 36 1f 42 9b 18 66 39 28 18 ad ec
c7 56 d8 95 4f e8 b8 02 8f 0a 57 6b 7e d1 1c 61
e2 b8 40 54 12 d0 01 be f6 e4 e4 01 09 86 56 48
12 a5 85 62 d9 34 00 8e c5 b3 77 e2 e7 08 5e 9d
61 d8 dc b1 4c 3c 21 75 31 5d 75 ce 5d 15 27 fe
7f 85 21 10 d3 41 07 74 0b 35 af 1a 45 9c db 4e
a1 f4 f4 c0 28 d9 d4 54 ad ef e2 d6 1e 94 10 f8
3e ed ae ef 6d e9 d1 19 b5 2b ed d2 54 b8 b0 47
5b 8b c7 e6 2c 82 ed 7d d6 f4 f8 59 60 7c 15 12
fd 68 41 fe 46 77 f8 96 99 45 dd ed 47 68 4d 6d
e8 51 cc da 66 a0 56 4d e9 74 af f8 06 ff 92 7e
6d 12 ba 21 3c 86 04 cf a0 c0 bd 18 86 c2 11 bc
13 81 a2 54 60 a8 21 fd 50 b2 19 5c 8c 5a ee 00
fe 11 b8 71 ea 15 c3 15 28 1c 41 d5 a7 27 22 c2
42 e7 5f 1b aa ec f9 09 04 00 0d 0d 63 8b 84 aa
a0 d2 e7 f5 1b b6 d8 5f f7 5c 53 f0 9a 41 f2 27
```

```
96 33 c4 93 d9 11 5c 5b 1a a4 d4 f8 2c c0 fc 79
99 ad 8b cd 34 fb 7e e6 60 40 11 80 30 b2 0d 23
36 df d8 b5 0c d2 76 1a 1f 4d 7b d9 32 3e 97 09
f7 5f b1 6c 3c 6b 78 17 c0 4e 63 66 a7 8b 46 85
38 bd fa d1 e2 e9 3d c8 33 33 94 08 b2 c2 8b c8
ab 89 1f 78 d8 7c f7 0b 61 f2 f2 6c 81 38 72 f5
9d d3 32 43 7b 15 68 e3 d8 eb be 73 d1 1d 35 16
a1 17 dc 02 65 da 91 62 2a 9f 82 6d 75 f7 ab 0c
83 63 e2 7f d9 25 9b 44 9e 35 fd 0e 1a 1e b1 c7
e4 46 a6 03 2a 11 ba d1 2a aa 34 6b ee d1 ae 3b
c4 bc cb f9 35 03 e0 e6 03 55 1f bf b0 c0 b4 7d
99 ad 7d 5b 65 63 a7 9c a4 61 8b 5d 11 bf 40 43
bb 83 4d d8 fa ec 25 60 e2 a2 3c b0 6e 23 92 4b
ff 47 83 7f 06 4d 27 67 d8 50 80 07 69 ae e3 d0
7b 9e 18 7a 1f 46 52 b5 4e 6a bc 34 f7 91 60 ee
5b f9 2c a7 ce 8f 90 d0 e5 6f d1 44 f0 2f 98 d3
26 79 80 7a 7c 76 bf 86 25 e6 d1 c6 0a 24 7b 61
63 ff 6a f3 f5 d5 8b ce 4f c5 2c d6 0c
```

DECRYPT TEXT: 1500 bytes

```
d7 ba 2e 39 80 20 24 5d 54 ef e9 a0 d7 d2 7f 56
65 a9 9c 43 27 13 1c a6 5e 4a 55 18 6e f0 96 44
a9 c4 7d 29 e3 a1 85 36 8f 6e d5 65 3f 54 bb a4
fd 57 e6 23 6a 02 c9 c7 4c 1e de b9 0d 73 fd b6
36 7a de 19 1a 63 4e a9 d0 22 0e 0e 76 c8 b2 72
1f 97 95 88 99 5d 4e e4 7b 2c 9d 87 9f 99 3c d5
12 1a ed 2c 7c 3a d4 4b 5c e1 59 d1 a9 0a 42 c8
a1 d7 4f 39 33 9d 1d ad c9 b9 34 67 51 70 3c 63
89 28 8f 04 62 62 4f bd 43 a7 8e ec b0 d0 b3 50
a6 02 89 d9 9f a5 85 67 5d b9 ce ae 28 09 11 b0
31 9f b4 92 01 02 4f 43 a8 dc 2f 58 ab e2 a8 51
e3 30 29 81 d5 ad e8 31 65 b5 df 8d be ef 3c ee
8e ef 7f 8e f1 cd d1 99 a9 ff f0 54 e0 97 a4 c3
c7 cc 44 9b 79 2b cc de e0 ab 6a 9d 99 a6 8a 26
95 09 b4 85 d6 84 1d 7e 83 0d d1 63 a4 74 25 6a
40 69 05 b8 93 d1 96 73 7b ff 10 14 a5 99 39 39
a2 ed bd 77 71 da f4 f3 e7 c5 56 8a 39 7b f4 78
e3 f8 30 76 c8 c5 e8 42 c3 f7 55 68 90 8e a0 31
7b 5d a8 eb 36 9c de 1d 60 33 a6 98 ae 99 10 90
91 3f 05 59 03 ed 9a c6 e4 ef 2d 73 7d cc a4 f8
28 4b e2 5e e7 c0 7a 46 f3 20 de a0 b8 ed 30 49
2b 34 a1 2e 21 3b f3 04 2a 1f 77 a7 eb 1a 9e 13
65 80 70 4c 3f ea 91 31 09 6f d1 c1 5c 00 0a 87
34 aa b4 54 e4 a6 58 0d c5 ce b3 af e8 51 c1 4d
d0 31 98 0e 1a 29 3f 23 97 0f e4 f3 0f ed 79 42
97 2c 96 7a d1 ee 87 96 bb 3a 44 a3 8a 05 ef 59
35 86 67 4f af a6 72 45 b5 56 37 c3 43 af 05 d9
db 9a 53 ab 87 da 41 42 13 84 e4 9d 88 d3 f6 bd
59 5d 0c 07 02 7d 4b b6 d2 82 78 15 31 7c ed 0c
16 3f b7 9d 18 f7 df 2b 7a c2 c8 02 95 bd bf ed
19 ca f3 1a 47 3e d0 19 c0 47 2d f1 c3 19 fc d9
58 b2 75 70 a8 53 9a 22 15 61 24 a9 1e e2 96 36
ac 88 50 f2 c5 20 0a 84 67 37 74 2a 4f 70 02 a7
```

```
21 77 16 c8 ca b0 ea df 11 0d 87 2e ee 1d 64 99
a4 b4 8b 69 d3 94 ec 39 cb 60 62 19 cf 64 c0 f0
da d5 b7 a3 85 a0 81 95 ac 08 c2 9a 24 25 33 c8
d9 bd 30 ab 51 1c e4 1b 7b 46 34 4a a9 f3 39 82
c8 f0 25 4c 90 a5 e0 3c ad a2 d6 d1 c6 08 98 9f
c4 c7 49 14 e2 2d 2e 5d 72 61 a6 1a 54 df 9c 1b
cf c0 67 5e 65 46 9a 12 e7 6f e2 ad 76 79 4b 3a
3f 94 4e 21 c0 7b 7d 32 dc 23 4c 30 01 e7 4a d0
a7 b1 2d 0c f6 c7 1d dd 36 ff 8a ab 78 d5 e5 b7
68 32 d7 28 ad 53 59 89 76 a4 b8 76 8b 02 45 32
b2 72 3d a8 39 5a 84 6e 58 0d 19 d0 e2 fd 86 49
2f 5c 71 db af ca 63 24 6e 1b 9a f8 1c df 29 ce
51 66 75 89 bf f9 f6 17 06 0e e6 e7 0b 6c 30 39
c8 a0 13 77 69 76 9b d6 91 34 ce ad 13 f7 7a 63
5c ef eb 1b e7 e1 32 ec ee 17 d3 f8 83 02 31 4a
a1 44 c0 0a b9 5a e0 49 8e ad f6 a0 a4 6f 03 ff
5e ed 1a 44 ce 4b 30 bb 62 02 b3 e4 03 e3 2e a4
26 ed ad df 47 8d 28 d5 3a 1d 74 dd 8c 77 dc e9
63 f5 2d 31 40 5d eb a1 5e 9e 85 61 81 b2 05 a7
9f b2 86 e6 3e ad ba 77 ca 2e 54 56 a4 2f 3f 07
24 6b 37 63 c8 22 04 26 bf 88 87 40 3a 8b e6 d9
3d 6b be 7b 18 77 f1 e2 a4 45 37 48 73 76 4e 97
e1 84 f9 a8 a5 fd cd 64 84 53 a3 be de 89 96 1a
f4 53 94 0c ca 85 ed 6e c9 24 b5 3c 99 03 d2 7a
86 cb 21 2b c7 ed 8f 4b 40 32 09 1d bb 9e 37 ae
f1 ca b9 bb 4f a6 28 18 c9 dd 53 62 df 25 db 64
ef fc 8f b6 e9 1e 01 28 4f 09 45 09 a6 7b b7 97
45 70 51 93 15 78 aa de 54 fd 40 32 21 1a 96 10
16 25 c5 fe 42 c5 25 91 cd 6a 9a 73 e4 50 0a 29
c0 5a bc d4 d2 65 b2 26 62 f1 58 82 0b ed 92 20
12 57 1d 53 1c 42 e4 e9 ac 7d 5b 90 cd 65 b8 8d
be 73 60 8f d8 12 b5 39 02 0c bb 0c f9 4c 2c 0a
a3 49 5d be 8a 40 a6 35 bd 01 c4 8a 65 7c 16 23
ee 76 b2 c5 87 66 fe 89 71 b8 95 69 04 c0 72 a6
08 cf 64 92 0f 09 c7 cb 0a 8b 55 6e 06 6a 91 f3
e0 42 b8 67 a7 b5 ef 17 6d 84 80 71 44 f2 17 4b
c0 7a dd ce 83 a3 99 8c 2d ee fa 33 58 8a 25 37
cb dd 9d 72 92 8c 89 ff 10 08 6f 53 fa 85 9d b9
ff 7a 87 81 1c 20 0c 49 0d 06 7b 64 8f a0 9b 5a
7d 38 cc 0e c4 54 0d d3 5c 7b 25 55 00 c2 0e ff
3b 95 7f 57 b4 8b a0 c1 90 1b 25 1f ba c0 79 37
f7 44 45 ba 98 51 8d f3 cc b1 47 cc 73 54 ca ae
e9 48 05 9c d2 a4 5d 62 be 82 81 78 41 f9 ae 38
3d f2 f1 d4 43 7e c6 0e 2e 0d d9 a1 61 a2 4e 49
e9 52 e5 bb f5 42 1c b3 c3 9c 2b 04 95 d9 3b d1
ca 2b a5 0c a8 6a 1a d6 77 f2 76 d7 93 c4 20 7c
15 04 37 0a 45 53 bd 08 ef e7 0b 83 bf 45 54 89
70 f8 95 18 62 ae ee d9 a0 64 b0 33 27 cf af 3c
d3 e5 45 18 37 01 1f 26 e8 29 a9 a6 6e fc 2f dd
f4 c3 f5 56 71 e2 2e 10 45 dd 42 6b ac f0 a6 7e
d5 eb 95 0c ec b4 31 d3 dd da 79 4a d6 a7 27 c9
69 1b 1f da fd 4c e9 41 29 2b ac d4 1a 52 52 ef
3d e6 fa 28 99 2b fb 75 04 73 bf d9 19 e5 a2 82
00 c0 5c fc 0c 44 3d 35 6e e8 08 88 3a 59 76 76
```

```
3f 70 9d d8 9b 97 4c 9e 09 0a 77 22 ef 18 a4 ee
d8 ff e9 e3 43 25 17 b1 0d 1f 38 46 78 ae bb b7
1e 57 8e b8 ee d9 56 f7 e3 cc 19 d1 e4 bd bf bb
bc a8 9e fe cc b5 ae d9 d3 e6 1e 4b 93 d9 01 b0
30 8e 68 1d 67 bd 14 49 88 2c 1a 6b e8 d8 25 a4
7f c3 a1 4b 77 4f 24 4a 34 42 94 c6 1a 95 76 4a
23 de 67 89 9a 7a d2 22 a6 ec 8c 8e
```

F.1.1.1.4 Test program

```
/*****************************************************************/
/* IEEE Std 802.16 MBS (Multimedia Broadcast Service) AES-CTR mode */
/* example                                                         */
/* program for KAT (Known Answer Test). KAT help implementors to   */
/* verify AES algorithm and CTR mode correctly for MBS defined     */
/* in PKMv2                                                        */
/* Version Number: 0.2                                             */
/* Name: JunHyuk Song, Jicheol Lee                                 */
/*****************************************************************/


#include <stdlib.h>
#include <stdio.h>

#define MAX_BUF10000

/****************************/
/*** AES 16X16 SBOX Table ****/
/****************************/

unsigned char sbox_table[256] =
{
   0x63, 0x7c, 0x77, 0x7b, 0xf2, 0x6b, 0x6f, 0xc5,
   0x30, 0x01, 0x67, 0x2b, 0xfe, 0xd7, 0xab, 0x76,
   0xca, 0x82, 0xc9, 0x7d, 0xfa, 0x59, 0x47, 0xf0,
   0xad, 0xd4, 0xa2, 0xaf, 0x9c, 0xa4, 0x72, 0xc0,
   0xb7, 0xfd, 0x93, 0x26, 0x36, 0x3f, 0xf7, 0xcc,
   0x34, 0xa5, 0xe5, 0xf1, 0x71, 0xd8, 0x31, 0x15,
   0x04, 0xc7, 0x23, 0xc3, 0x18, 0x96, 0x05, 0x9a,
   0x07, 0x12, 0x80, 0xe2, 0xeb, 0x27, 0xb2, 0x75,
   0x09, 0x83, 0x2c, 0x1a, 0x1b, 0x6e, 0x5a, 0xa0,
   0x52, 0x3b, 0xd6, 0xb3, 0x29, 0xe3, 0x2f, 0x84,
   0x53, 0xd1, 0x00, 0xed, 0x20, 0xfc, 0xb1, 0x5b,
   0x6a, 0xcb, 0xbe, 0x39, 0x4a, 0x4c, 0x58, 0xcf,
   0xd0, 0xef, 0xaa, 0xfb, 0x43, 0x4d, 0x33, 0x85,
   0x45, 0xf9, 0x02, 0x7f, 0x50, 0x3c, 0x9f, 0xa8,
   0x51, 0xa3, 0x40, 0x8f, 0x92, 0x9d, 0x38, 0xf5,
   0xbc, 0xb6, 0xda, 0x21, 0x10, 0xff, 0xf3, 0xd2,
   0xcd, 0x0c, 0x13, 0xec, 0x5f, 0x97, 0x44, 0x17,
   0xc4, 0xa7, 0x7e, 0x3d, 0x64, 0x5d, 0x19, 0x73,
   0x60, 0x81, 0x4f, 0xdc, 0x22, 0x2a, 0x90, 0x88,
   0x46, 0xee, 0xb8, 0x14, 0xde, 0x5e, 0x0b, 0xdb,
   0xe0, 0x32, 0x3a, 0x0a, 0x49, 0x06, 0x24, 0x5c,
   0xc2, 0xd3, 0xac, 0x62, 0x91, 0x95, 0xe4, 0x79,
   0xe7, 0xc8, 0x37, 0x6d, 0x8d, 0xd5, 0x4e, 0xa9,
   0x6c, 0x56, 0xf4, 0xea, 0x65, 0x7a, 0xae, 0x08,
   0xba, 0x78, 0x25, 0x2e, 0x1c, 0xa6, 0xb4, 0xc6,
   0xe8, 0xdd, 0x74, 0x1f, 0x4b, 0xbd, 0x8b, 0x8a,
   0x70, 0x3e, 0xb5, 0x66, 0x48, 0x03, 0xf6, 0x0e,
   0x61, 0x35, 0x57, 0xb9, 0x86, 0xc1, 0x1d, 0x9e,
   0xe1, 0xf8, 0x98, 0x11, 0x69, 0xd9, 0x8e, 0x94,
   0x9b, 0x1e, 0x87, 0xe9, 0xce, 0x55, 0x28, 0xdf,
   0x8c, 0xa1, 0x89, 0x0d, 0xbf, 0xe6, 0x42, 0x68,
   0x41, 0x99, 0x2d, 0x0f, 0xb0, 0x54, 0xbb, 0x16
};

/****************************/
/**** Function Prototypes ****/
/****************************/

void bitwise_xor(unsigned char *ina, unsigned char *inb, unsigned char *out);
void print_hex(unsigned char *buf, int len) ;
```



```
/*****************************************************************/
/*************** AES algorithm operation functions *****************/
/*****************************************************************/

void xor_128(unsigned char *a, unsigned char *b, unsigned char *out);
void xor_32(unsigned char *a, unsigned char *b, unsigned char *out);

unsigned char sbox(unsigned char a);
void next_key(unsigned char *key, int round);
void byte_sub(unsigned char *in, unsigned char *out);
void shift_row(unsigned char *in, unsigned char *out);
void mix_column(unsigned char *in, unsigned char *out);
void add_round_key( unsigned char *shiftrow_in,
                    unsigned char *mcol_in,
                    unsigned char *block_in,
                    int round,
                    unsigned char *out);
void aes128k128d(unsigned char *key, unsigned char *data, unsigned char *ciphertext);

/*********************************************/
/* This function is to generate 32bit nonce */
/* based on GCC rand()                      */
/*********************************************/

unsigned long random_32bit(void)
{
        return (unsigned long) rand();
}
/*************************************************/
/* This function is to generate random plain text */
/*************************************************/

unsigned char random_8bit(void)
{
        unsigned char ret;

        ret = (unsigned char) 1 + (int) (256.0*rand()/(RAND_MAX+1.0));
        return ret;
}

void generate_plain(unsigned char *plain, int len)
{
        int     i;

        for ( i=0; i<len; i++ ) {
                plain[i] = random_8bit();
        }
}


/*************************************************************************/
/* AES Encryption functions are defined here.                            */
/* Performs a 128 bit AES encryption with 128 bit key and data blocks based */
/* based on NIST Special Publication 800-38A, FIPS 197                   */
/*************************************************************************/
```

```
/************************/
/* 128 bits XOR function */
/************************/


void xor_128(unsigned char *a, unsigned char *b, unsigned char *out)
{
   int i;
   for (i=0;i<16; i++)
   {
      out[i] = a[i] ^ b[i];
   }
}


/************************/
/* 32 bits XOR function */
/************************/

void xor_32(unsigned char *a, unsigned char *b, unsigned char *out)
{
   int i;
   for (i=0;i<4; i++)
   {
      out[i] = a[i] ^ b[i];
   }
}


/*********************************/
/* AES SBOX Table Setup   **********/
/*********************************/

unsigned char sbox(unsigned char a)
{
   return sbox_table[(int)a];
}


/*****************************************/
/* AES next_key operation *****************/
/*****************************************/

void next_key(unsigned char *key, int round)
{
   unsigned char rcon;
   unsigned char sbox_key[4];
   unsigned char rcon_table[12] =
   {
      0x01, 0x02, 0x04, 0x08, 0x10, 0x20, 0x40, 0x80,
      0x1b, 0x36, 0x36, 0x36
   };
```



```
    sbox_key[0] = sbox(key[13]);
    sbox_key[1] = sbox(key[14]);
    sbox_key[2] = sbox(key[15]);
    sbox_key[3] = sbox(key[12]);

    rcon = rcon_table[round];

    xor_32(&key[0], sbox_key, &key[0]);
    key[0] = key[0] ^ rcon;

    xor_32(&key[4], &key[0], &key[4]);
    xor_32(&key[8], &key[4], &key[8]);
    xor_32(&key[12], &key[8], &key[12]);
}


/***********************************/
/* AES Byte Substituition **********/
/***********************************/

void byte_sub(unsigned char *in, unsigned char *out)
{
    int i;
    for (i=0; i< 16; i++)
    {
        out[i] = sbox(in[i]);
    }
}



/***********************************/
/* AES Shift Row Operation *********/
/***********************************/

void shift_row(unsigned char *in, unsigned char *out)
{
    out[0] =  in[0];
    out[1] =  in[5];
    out[2] =  in[10];
    out[3] =  in[15];
    out[4] =  in[4];
    out[5] =  in[9];
    out[6] =  in[14];
    out[7] =  in[3];
    out[8] =  in[8];
    out[9] =  in[13];
    out[10] = in[2];
    out[11] = in[7];
    out[12] = in[12];
    out[13] = in[1];
    out[14] = in[6];
    out[15] = in[11];
}
```

```
/**********************************/
/****** AES mix_column operation ***/
/**********************************/

void mix_column(unsigned char *in, unsigned char *out)
{
   int i;
   unsigned char add1b[4];
   unsigned char add1bf7[4];
   unsigned char rotl[4];
   unsigned char swap_halfs[4];
   unsigned char andf7[4];
   unsigned char rotr[4];
   unsigned char temp[4];
   unsigned char tempb[4];

   for (i=0 ; i<4; i++)
   {
      if ((in[i] & 0x80)== 0x80)
         add1b[i] = 0x1b;
      else
         add1b[i] = 0x00;
   }

   swap_halfs[0] = in[2];    /* Swap halfs */
   swap_halfs[1] = in[3];
   swap_halfs[2] = in[0];
   swap_halfs[3] = in[1];

   rotl[0] = in[3];        /* Rotate left 8 bits */
   rotl[1] = in[0];
   rotl[2] = in[1];
   rotl[3] = in[2];

   andf7[0] = in[0] & 0x7f;
   andf7[1] = in[1] & 0x7f;
   andf7[2] = in[2] & 0x7f;
   andf7[3] = in[3] & 0x7f;

   for (i = 3; i>0; i--)    /* logical shift left 1 bit */
   {
      andf7[i] = andf7[i] << 1;
      if ((andf7[i-1] & 0x80) == 0x80)
      {
         andf7[i] = (andf7[i] | 0x01);
      }
   }
   andf7[0] = andf7[0] << 1;
   andf7[0] = andf7[0] & 0xfe;

   xor_32(add1b, andf7, add1bf7);
```



```
    xor_32(in, add1bf7, rotr);

    temp[0] = rotr[0];        /* Rotate right 8 bits */
    rotr[0] = rotr[1];
    rotr[1] = rotr[2];
    rotr[2] = rotr[3];
    rotr[3] = temp[0];

    xor_32(add1bf7, rotr, temp);
    xor_32(swap_halfs, rotl,tempb);
    xor_32(temp, tempb, out);
}

/* AES Encryption function that will do multiple round of AddRoundKey, SubBytes,
   ShiftRows, and MixColumns operations */

void aes128k128d(unsigned char *key, unsigned char *data, unsigned char *ciphertext)
{
    int round;
    int i;
    unsigned char intermediatea[16];
    unsigned char intermediateb[16];
    unsigned char round_key[16];

    for(i=0; i<16; i++) round_key[i] = key[i];

    for (round = 0; round < 11; round++)
    {
        if (round == 0) /* First AddRound Key Operation */
        {
            xor_128(round_key, data, ciphertext);
            next_key(round_key, round);
        }
        else if (round == 10) /* Final Round operations */
        {
            byte_sub(ciphertext, intermediatea);
            shift_row(intermediatea, intermediateb);
            xor_128(intermediateb, round_key, ciphertext);
        }
        else    /* 1 - 9 */
        {
            byte_sub(ciphertext, intermediatea);
            shift_row(intermediatea, intermediateb);
            mix_column(&intermediateb[0], &intermediatea[0]);
            mix_column(&intermediateb[4], &intermediatea[4]);
            mix_column(&intermediateb[8], &intermediatea[8]);
            mix_column(&intermediateb[12], &intermediatea[12]);
            xor_128(intermediatea, round_key, ciphertext);
            next_key(round_key, round);
        }
    }

}
```

```
/***********************************/
/* bitwise_xor()                   */
/* A 128 bit, bitwise exclusive or  */
/***********************************/

void bitwise_xor(unsigned char *ina, unsigned char *inb, unsigned char *out)
{
   int i;
   for (i=0; i<16; i++)
   {
      out[i] = ina[i] ^ inb[i];
   }
}


/**************************************************/
/* It generate 128bit key as                      */
/* 00 00 00 00 00 00 00 00 ff ff ff ff ff ff ff ff */
/* for Variable Key Known Answer Test             */
/**************************************************/

void generate_key(unsigned char *key)
{
        int                             i;

        for (i=0; i<8; i++ ) {
                key[i] = 0x00;
        }
        for (i=8; i<16; i++ ) {
                key[i] = 0xff;
        }
}

/**************************************************/
/* Initialization of Counter
/* first, construct 32 bit value by concatenate 8bit-rollovercounter
 *                and 24bit-phy_sync
 * seconds, concatnate the above results 4 times
/**************************************************/

void init_counter(unsigned char rollcnt, unsigned long phy_sync, unsigned char *ctr)
{
        int                     i, j;

        for ( i=0; i<4; i++ ) {
                ctr[i*4+0] = rollcnt;
                ctr[i*4+1] = (phy_sync >> 16 ) & 0xff;
                ctr[i*4+2] = (phy_sync >> 8 ) & 0xff;
                ctr[i*4+3] = phy_sync & 0xff;
        }
}

/*************************************************************/
/* It increment counter by one upon encryption of each block */
```



```
/*********************************************************/

void add_counter(char *ctr)
{
        int             value, i;
        int             overflow;

        overflow = 1;
        for ( i=15; i>=0 ; i-- ) {
                if ( overflow == 0 ) break;
                value = ctr[i] & 0xff;
                value ++;
                if ( value >= 256 )
                        overflow = 1;
                else overflow = 0;
                ctr[i] = value & 0xff;
        }
}
/* Return Roll over Counter */
unsigned char get_rollcnt(void)
{
        return 0x00;
}
unsigned long get_phy_sync(void)
{
        /* Suppose that phy sync 24bits are all one in this example. */
        return 0x00ffffff;
}

/*******************************************************/
/* int encrypt_pdu()                        */
/* Encrypts a plaintext pdu in accordance with      */
/* the proposed IEEE Std 802. AES CTR specification.    */
/* Roll-over-counter takes place.                   */
/* Returns the resulting cipher text                */
/*******************************************************/
int encrypt_pdu(unsigned char *key, unsigned char *plain, int len, unsigned char *cipher)
{
        int                             i, n_blocks, n_remain, out_len = 0;
        unsigned charctr[16], rollcnt;
        unsigned char aes_out[16], remain[16], temp[16];
        unsigned longphy_sync_value;

        rollcnt = get_rollcnt();
        phy_sync_value = get_phy_sync();
#ifdef DEBUG
        printf("Roll-over-counter: 1 Byte\n\n");
        printf("%02x\n\n",rollcnt);
        printf("PHY Syncronization: 3 Byte\n\n");
        printf("%06x\n\n", phy_sync_value);
#endif

        cipher[0] = rollcnt;
```

```
        out_len += 1;

        n_blocks = len / 16;
        n_remain  = len % 16;

        init_counter(rollcnt,phy_sync_value,ctr);
#ifdef DEBUG
        printf("Counter: 16 Bytes\n\n");
        print_hex(ctr,16);
        printf("\n");
   printf("Key: 16Bytes\n\n");
   print_hex(key,16);
        printf("\n");
#endif
        for ( i=0; i< n_blocks; i++ ) {
                aes128k128d(key, ctr, aes_out);
        bitwise_xor(aes_out, &plain[i*16], &cipher[i*16+1]);
                add_counter(ctr);

                out_len += 16;
        }

        for ( i=0; i<16; i++ ) {
                remain[i] = 0;
        }
        for ( i=0; i<n_remain; i++ ) {
                remain[i] = plain[n_blocks*16+i];
        }
        aes128k128d(key,ctr,aes_out);
        bitwise_xor(aes_out,&remain[0], &temp[0]);

        for ( i=0; i<n_remain; i++ ) {
                cipher[n_blocks*16+1+i] = temp[i];
        }
        out_len += n_remain;
        return out_len;
}
/*******************************************************/
/* int decrypt_pdu()                                   */
/* decrypts a cipher pdu in accordance with            */
/* the proposed IEEE Std 802.16 AES CTR specification. */
/* Decode roll-over-counter field                      */
/* Returns the resulting decrypted text                */
/*******************************************************/

int decrypt_pdu(unsigned char *key, unsigned char *cipher, int len, unsigned char *plain)
{
        int                                     i, n_blocks, n_remain, out_len = 0;
        unsigned charctr[16],rollcnt;
        unsigned char aes_out[16], remain[16], temp[16];
        unsigned longphy_sync_value;

        phy_sync_value = get_phy_sync();
        rollcnt = cipher[0];
```



```
        len -= 1;

        n_blocks = len / 16;
        n_remain  = len % 16;

        init_counter(rollcnt, phy_sync_value, ctr);
        for ( i=0; i< n_blocks; i++ ) {
            aes128k128d(key, ctr, aes_out);
            bitwise_xor(aes_out, &cipher[i*16+1], &plain[i*16]);
                add_counter(ctr);
                out_len += 16;
        }

        for ( i=0; i<16; i++ ) {
                remain[i] = 0;
        }
        for ( i=0; i<n_remain; i++ ) {
                remain[i] = cipher[n_blocks*16+1+i];
        }
        aes128k128d(key,ctr,aes_out);
        bitwise_xor(aes_out,&remain[0], &temp[0]);

        for ( i=0; i<n_remain; i++ ) {
                plain[n_blocks*16+i] = temp[i];
        }
        out_len += n_remain;
        return out_len;
}

/* HEX value print out function          */
void print_hex(unsigned char *buf, int len)
{
        int                     i;

        for ( i=0; i<len; i++ ) {
                printf("%02x ", buf[i]);
                if ( (i % 16) == 15 ) printf("\n");
        }
        if ( (i % 16) != 0 ) printf("\n");
}

int compare(unsigned char *x, unsigned char *y, int len)
{
        int                     i;

        for ( i=0; i<len; i++ ) {
                if ( x[i] == y[i] ) continue;
                return (x[i] - y[i]);
        }
        return 0;
}
```

```
int test_case(int length)
{
        unsigned charkey[16];
        unsigned charplain[MAX_BUF];
        unsigned charcipher[MAX_BUF+4];
        unsigned chardecrypt[MAX_BUF];

        /* 0. Get a 128bits key */
        generate_key(key);

        /* 1. Generate Plain Text with length */

        generate_plain(plain,length);

#ifdef DEBUG
        printf("PLAIN TEXT: %d Bytes\n\n",length);
        print_hex(plain,length);
        printf("\n\n");
#endif

        /* 2. Encrypt Plain Text to Cipher Text */

        encrypt_pdu(key,plain,length,cipher);

#ifdef DEBUG
        printf("CIPHER TEXT: %d Byte + 1 Byte(Roll-over-counter)\n\n",length);
        print_hex(cipher,length+1);
        printf("\n\n");
#endif

        /* 3. Decrypt Cipher Text to decrypt text */

        decrypt_pdu(key,cipher,length+1,decrypt);

#ifdef DEBUG
        printf("DECRYPT TEXT: %d Byte\n\n",length);
        print_hex(decrypt,length);
        printf("\n\n");
#endif

        /* 4. Compare decrypt text and original plain text */

        if ( compare(decrypt,plain,length) == 0 ) {
                return 1; /* Test Success */
        } else {
                return 0; /* Test Failure */
        }
}


/*****************************************************/
/* AES CTR main()                                    */
/* Test vectors                                      */
/*****************************************************/
```



```
int main()
{
        int                 i, len[] = { 64, 256, 1500 };

        for ( i=0; i<sizeof(len)/sizeof(len[0]); i++ ) {
                printf("Test                                                    %d
**************************************************\n\n",i+1);
                if ( !test_case(len[i]) ) {
                        printf(" ==> Failure\n");
                }
        }
        return 0;
}
```

F.2 Test vectors for CRC16 CCITT X.25

```
unsigned char crc16vector1[] = {
0x01, 0x02, 0x03, 0x04, 0x05, 0x06, 0x07, 0x08, 0x09, 0x0a,
/*CRC*/
0xd3,0x8d};/* last two bytes are CRC in big endian format */


unsigned char crc16vector2[] = {
0x01, 0x02, 0x03, 0x04, 0x05, 0x06, 0x07, 0x08, 0x09, 0x0a,
0x0b, 0x0c, 0x0d, 0x0e, 0x0f, 0x10, 0x11, 0x12, 0x13, 0x14,
/*CRC*/
0xe3, 0x94};}; /* last two bytes are CRC in big endian format */


unsigned char crc16[] = {
0xC0, 0xFC, 0xDA, 0x37}; /* last two bytes are CRC in big endian format */

unsigned char crc16A[] = {
0x80, 0xCE, 0xC1, 0xEA};  /* last two bytes are CRC in big endian format */

unsigned char crc16B[] = {
0x80, 0xFC, 0xD7, 0xFB}; /* last two bytes are CRC in big endian format */

unsigned char crc16C[] = {
0xC0, 0xCE, 0xCC, 0x26}; /* last two bytes are CRC in big endian format */
```

Annex G

(informative)

LDPC direct encoding

The LPDC code is flexible in that it can accommodate various code rates as well as packet sizes.

The encoding of a packet at the transmitter generates parity-check bits $\mathbf{p}=(p_0, \ldots, p_{m-1})$ based on an information block $\mathbf{s}=(s_0, \ldots, s_{k-1})$, and transmits the parity-check bits along with the information block. Because the current symbol set to be encoded and transmitted is contained in the transmitted codeword, the information block is also known as systematic bits. The encoder receives the information block $\mathbf{s} = (s_0, \ldots, s_{k-1})$ and uses the matrix $\mathbf{H}_{\mathrm{bm}}$ to determine the parity-check bits. The expanded matrix $\mathbf{H}$ is determined from the model matrix $\mathbf{H}_{\mathrm{bm}}$. Since the expanded matrix $\mathbf{H}$ is a binary matrix, encoding of a packet can be performed with vector or matrix operations conducted over GF(2).

One method of encoding is to determine a generator matrix $\mathbf{G}$ from $\mathbf{H}$ so that $\mathbf{G}\,\mathbf{H}^{\mathrm{T}} = \mathbf{0}$. A k-bit information block $\mathbf{s}_{1\times k}$ can be encoded by the code generator matrix $\mathbf{G}_{k\times n}$ via the operation $\mathbf{x} = \mathbf{s}\,\mathbf{G}$ to become an n-bit codeword $\mathbf{x}_{1\times n}$, with codeword $\mathbf{x}=[\mathbf{s}\ \mathbf{p}]=[s_0, s_1, \ldots, s_{k-1}, p_0, p_1, \ldots, p_{m-1}]$, where $p_0, \ldots p_{m-1}$ are the parity-check bits; and $s_0, \ldots s_{k-1}$ are the systematic bits.

Encoding an LDPC code from $\mathbf{G}$ can be quite complex. The LDPC codes are defined so that very low complexity encoding directly from $\mathbf{H}$ is possible.

The following informative subclause shows two such methods.

G.1 Method 1a

Encoding is the process of determining the parity sequence $\mathbf{p}$ given an information sequence $\mathbf{s}$. To encode, the information block $\mathbf{s}$ is divided into $k_b = n_b - m_b$ groups of z bits. Let this grouped $\mathbf{s}$ be denoted $\mathbf{u}$,

$$u = \left[u(0)\ u(1)\ \ldots\ u(k_b - 1)\right],$$

where each element of $\mathbf{u}$ is a column vector as follows:

$$u(i) = \left[S_{iz}\ S_{iz+1}\ \ldots\ S_{(i+1)z-1}\right]^T$$

Using the model matrix $\mathbf{H}_{\mathrm{bm}}$, the parity sequence $\mathbf{p}$ is determined in groups of z. Let the grouped parity sequence $\mathbf{p}$ be denoted $\mathbf{v}$,

$$v = \left[v(0)\ v(1)\ \ldots\ v(m_b - 1)\right],$$

where each element of $\mathbf{v}$ is a column vector as follows:

$$v(i) = \left[p_{iz}\ p_{iz+1}\ \ldots\ p_{(i+1)z-1}\right]^T$$

Encoding proceeds in two steps, (1) initialization, which determines $\mathbf{v}(0)$, and (2) recursion, which determines $\mathbf{v}(i+1)$ from $\mathbf{v}(i)$, $0 \le i \le m_b - 2$.

An expression for **v**(0) can be derived by summing over the rows of $\mathbf{H}_{bm}$ to obtain Equation (G.1).

$$P_{p(x,k_b)}v(0) = \sum_{j=0}^{k_b-1}\sum_{i=0}^{m_b-1} P_{p(i,j)}u(j) \tag{G.1}$$

where x, $1 \le x \le m_b - 2$, is the row index of $\mathbf{h}_{bm}$ where the entry is nonnegative and unpaired, and $\mathbf{P}_i$ represents the zxz identity matrix circularly right shifted by size i.

Equation (G.2) is solved for $\boldsymbol{v}(0)$ by multiplying by $P^{-1}{}_{p(x,k_b)}$, and $P^{-1}{}_{p(x,k_b)} = P_{z-p(x,k_b)}$ since $p(x,k_b)$ represents a circular shift.

Considering the structure of $\mathbf{H}'_{b2}$,the recursion can be derived as follows in Equation (G.2) and Equation (G.3).

$$v(1) = \sum_{j=0}^{k_b-1} P_{p(i,j)}u(j) + P_{p(i,k_b)})v(0),\ i = 0, \tag{G.2}$$

$$v(i+1) = v(i) + \sum_{j=0}^{k_b-1} P_{p(i,j)}u(j) + P_{p(i,k_b)}v(0),\ i = 1, \ldots, m_b - 2 \tag{G.3}$$

where

$$P_{-1} \equiv 0_{z \times z}$$

Thus all parity bits not in $v(0)$ are determined by evaluation Equation (G.3) for $0 \le i \le m_b - 2$. Equation (G.1), Equation (G.2), and Equation (G.3) completely describe the encoding algorithm. These equations also have a straightforward interpretation in terms of standard digital logic architectures. Since the nonzero elements $p(i,j)$ of $\mathbf{H}_{bm}$ represent circular shift sizes of a vector, all products of the form $\mathbf{P}_{p(i,j)}\boldsymbol{u(j)}$ can be implemented by a size-z barrel shifter.

G.4 Method 1b

Equivalently, Method 1 can be implemented in a parallel fashion where almost all parity check parity bits are generated simultaneously. The initialization and the recursion steps of Method 1 become

a) *Initialization.* The parity check bit vector $v(0)$ are computed by Equation (G.4).

$$P_{p(x,k_b)}v(0) = \sum_{j=0}^{k_b-1}\left(\sum_{q=0}^{m_b-1} P_{p(q,j)}\right)u(j) \tag{G.4}$$

b) *Parallel computation.* The parity check bit vectors $v(1) \sim v(m_b - 1)$ are concurrently computed by Equation (G.5).

$$v(i) = \sum_{j=0}^{k_b-1}\left(\sum_{q=i}^{m_b-1} P_{p(q,j)}\right)u(j) + \sum_{q=i}^{m_b-1} P_{p(q,k_b)}v(0)\ \ i = 1, \ldots, m_b - 1 \tag{G.5}$$

The parallel encoding method may significantly reduced the latency at the expense of extra storage for the sum

$$\left(\sum_{q=i}^{m_b - 1} P_{p(q,j)} \right)$$

G.6 Method 2

For efficient encoding of LDPC, **H** are divided into the form of Equation (G.6).

$$H = \begin{bmatrix} A & B & T \\ C & D & E \end{bmatrix} \tag{G.6}$$

where A is $(m-z)\times k\alpha$, B is $(m-z)\times z$, T is $(m-z)\times(m-z)$, C is $z\times k$, D is $z\times z$, and finally E is $z\times(m-z)$. $\binom{B}{D}$ and **D** correspond to the expanded $\mathbf{h}_b$ and $\mathbf{h}_b(m_b - 1)$, respectively.

Let $v = (u, p_1, p_2)$ where u denotes the systematic part, $\boldsymbol{p_1}$ and $\boldsymbol{p_2}$ combined denote the parity part, $\boldsymbol{p_1}$ has length **z**, and $\boldsymbol{p_2}$ has length $(m-z)$. The definition equation $(H \cdot v^t) = 0$ splits into two equations, as in Equation (G.7) and Equation (G.8).

$$Au^T + Bp_1{}^T + Tp_2{}^T = 0 \tag{G.7}$$

and

$$(ET^{-1}A + C)u^T + (ET^{-1}B + D)p_1{}^T = 0 \tag{G.8}$$

Define $\phi := (ET^{-1}B + D)$ and with the parity check matrix as indicated $\phi = I$. Then from Equation (G.8), it can be concluded that

$$P_1{}^T = (ET^{-1}A + C)u^T \tag{G.9}$$

and

$$P_2{}^T = T^{-1}(Au^T + Bp_1{}^T) \tag{G.10}$$

As a result, the encoding procedures and the corresponding operations can be summarized below and illustrated in Figure G.1.

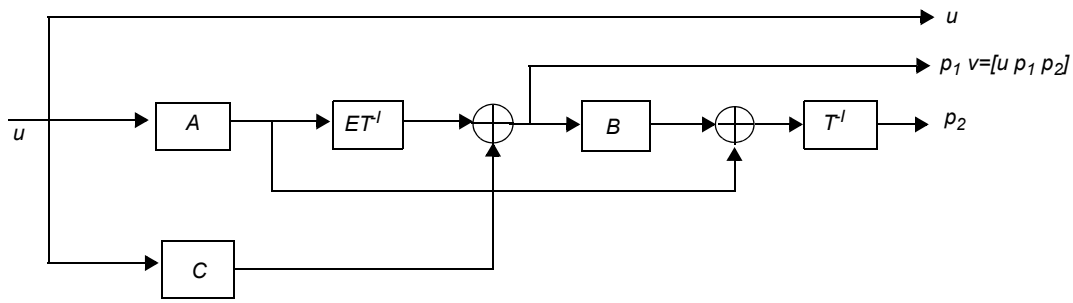

Figure G.1—Block diagram of the encoder architecture for the block LDPC code

G.2 Encoding procedure

Step 1) Compute Au^T and Cu^T

Step 2) Compute $ET^{-1}(Au^T)$

Step 3) Compute $p_1{}^T$ by $p_1{}^T = ET^{-1}(Au^T) + Cu^T$

Step 4) Compute $p_2{}^T$ by $Tp_2{}^T = Au^T + Bp_1{}^T$

Annex H

(informative)

Definitions of wmanPriMib

This annex describes a MIB module that defines vendor-specific managed objects for an IEEE 802.16-based BS to provide critical remote monitoring functions for temperature, fan, and power alarms. This MIB is located under the Private MIB subtree.

For example: iso(1).org(3).dod(6).internet(1).private(4)enterprises(1).intel(373).wmanPriMib(1)

```
WMAN-PRIVATE-MIB DEFINITIONS ::= BEGIN

  IMPORTS
        MODULE-IDENTITY,
        OBJECT-TYPE,
        NOTIFICATION-TYPE,
        Integer32
                FROM SNMPv2-SMI
        OBJECT-GROUP,
        MODULE-COMPLIANCE,
        NOTIFICATION-GROUP
                FROM SNMPv2-CONF;

wmanPriMib MODULE-IDENTITY
        LAST-UPDATED    "200508020000Z" -- August 02, 2005
        ORGANIZATION    "IEEE 802.16"
        CONTACT-INFO
            "WG E-mail: stds-802-16@ieee.org
             WG Chair:  Roger B. Marks
             Postal:    (U.S.) National Institute
                         of Standards and Technology
             E-mail:    r.b.marks@ieee.org

             TGf Chair: Phillip Barber
             Postal:    Huawei Technologies Co., Ltd
             E-mail:    pbarber@Huawei.com

             Editor:    Joey Chou
             Postal:    Intel Corporation
                        5000 W. Chandler Blvd,
                        Chandler, AZ 85227, USA
             E-mail:    joey.chou@intel.com"
        DESCRIPTION
            "This material is from IEEE Std 802.16f-2005
             Copyright (c) 2005 IEEE.
             This MIB Module provides the example of how to define
             vendor specific managed objects for IEEE 802.16-2004
             based Base Station to provide critical remote monitoring
             functions, and is located under the Private MIB subtree.
             This MIB is not intended to be used directly as defined
             here. Instead enterprise developers should follow this
             example when defining their private MIBs.
             For example:
             iso(1).org(3).dod(6).internet(1).private(4).enterprises(1)
             .intel(343).wmanPriMib(1)"
        REVISION        "200508020000Z"
        DESCRIPTION
            "The first version of WMAN-PRI-MIB module."
        ::= { iso org(3) dod(6) internet(1) private(4) enterprises(1)
              intel(343) 1 }

wmanPriMibObjects  OBJECT IDENTIFIER ::= { wmanPriMib 1 }
```



```
--
-- wmanPriNotification contains the BS SNMP Trap objects
--
wmanPriNotification   OBJECT IDENTIFIER ::= {wmanPriMibObjects  1}
wmanPriTrapControl    OBJECT IDENTIFIER ::= {wmanPriNotification 1}
wmanPriTrapDefinition OBJECT IDENTIFIER ::= {wmanPriNotification 2}

-- This object groups all NOTIFICATION-TYPE objects for BS.
-- It is defined following RFC2758 sections 8.5 and 8.6
-- for the compatibility with SNMPv1.
wmanPriTrapPrefix OBJECT IDENTIFIER ::= { wmanPriTrapDefinition 0 }

wmanPriTrapControlRegister    OBJECT-TYPE
        SYNTAX      BITS {wmanPriPowerStatusChange (0),
                          wmanPriFanStatusChange   (1),
                          wmanPriTemperatureChange (2)}
        MAX-ACCESS read-write
        STATUS     current
        DESCRIPTION
            "The object is used to enable or disable Base Station traps.
             From left to right, the set bit indicates the corresponding
             Base Station trap is enabled."
        ::= { wmanPriTrapControl 1 }

--
-- BS threshold Definitions
--
wmanPriThresholdConfigTable OBJECT-TYPE
        SYNTAX      SEQUENCE OF WmanPriThresholdConfigEntry
        MAX-ACCESS  not-accessible
        STATUS      current
        DESCRIPTION
            "This table contains threshold objects that can be set
             to detect the threshold crossing events."
        ::= { wmanPriTrapControl 2 }

wmanPriThresholdConfigEntry OBJECT-TYPE
        SYNTAX      WmanPriThresholdConfigEntry
        MAX-ACCESS  not-accessible
        STATUS      current
        DESCRIPTION
            "This table provides one row for each BS sector, and is
             indexed by wmanPriDeviceIndex."
        INDEX       { wmanPriDeviceIndex }
        ::= { wmanPriThresholdConfigTable 1 }

WmanPriThresholdConfigEntry ::= SEQUENCE {
        wmanPriDeviceIndex                      INTEGER,
        wmanPriTempLowAlarmThreshold            Integer32,
        wmanPriTempLowAlarmRestoredThreshold    Integer32,
        wmanPriTempHighAlarmThreshold           Integer32,
        wmanPriTempHighAlarmRestoredThreshold   Integer32}
```

```
wmanPriDeviceIndex  OBJECT-TYPE
        SYNTAX      INTEGER (1..10)
        MAX-ACCESS  read-only
        STATUS      current
        DESCRIPTION
            "An index identifies the BS device that can be BS sectors."
        ::= { wmanPriThresholdConfigEntry 1 }

wmanPriTempLowAlarmThreshold OBJECT-TYPE
        SYNTAX      Integer32
        UNITS       "degreeF"
        MAX-ACCESS  read-write
        STATUS      current
        DESCRIPTION
            "Low threshold for generating the temperature low alarm
             trap. The detection of temperature low alarm will be
             disabled until the temperature goes above
             wmanPriTempLowAlarmRestoredThreshold"
        ::= { wmanPriThresholdConfigEntry 2 }

wmanPriTempLowAlarmRestoredThreshold OBJECT-TYPE
        SYNTAX      Integer32
        UNITS       "degreeF"
        MAX-ACCESS  read-write
        STATUS      current
        DESCRIPTION
            "Low threshold for generating a trap indicating
             the temperature alarm is restored."
        ::= { wmanPriThresholdConfigEntry 3 }

wmanPriTempHighAlarmThreshold OBJECT-TYPE
        SYNTAX      Integer32
        UNITS       "degreeF"
        MAX-ACCESS  read-write
        STATUS      current
        DESCRIPTION
            "Low threshold for generating the temperature low alarm
             trap. The detection of temperature low alarm will be
             disabled until the temperature goes above
             wmanPriTempLowAlarmRestoredThreshold"
        ::= { wmanPriThresholdConfigEntry 4 }

wmanPriTempHighAlarmRestoredThreshold OBJECT-TYPE
        SYNTAX      Integer32
        UNITS       "degreeF"
        MAX-ACCESS  read-write
        STATUS      current
        DESCRIPTION
            "High threshold for generating a trap indicating
             the temperature alarm is restored."
        ::= { wmanPriThresholdConfigEntry 5 }

--
-- Base station Notification Object Definitions
```



```
--
wmanPriNotificationObjectsTable OBJECT-TYPE
        SYNTAX      SEQUENCE OF WmanPriNotificationObjectsEntry
        MAX-ACCESS  not-accessible
        STATUS      current
        DESCRIPTION
            "This table contains BS notification objects that have been
             reported by the trap."
        ::= { wmanPriTrapDefinition 1 }

wmanPriNotificationObjectsEntry OBJECT-TYPE
        SYNTAX      WmanPriNotificationObjectsEntry
        MAX-ACCESS  not-accessible
        STATUS      current
        DESCRIPTION
            "This table provides one row for each BS sector that has
             generated traps, and is indexed by wmanPriDeviceIndex."
        INDEX       { wmanPriDeviceIndex }
        ::= { wmanPriNotificationObjectsTable 1 }

WmanPriNotificationObjectsEntry ::= SEQUENCE {
        wmanPriPowerStatus                      INTEGER,
        wmanPriFanStatus                        INTEGER,
        wmanPriTemperatureStatus                INTEGER,
        wmanPriPowerStatusInfo                  OCTET STRING,
        wmanPriFanStatusInfo                    OCTET STRING,
        wmanPriTemperatureStatusInfo            OCTET STRING}

wmanPriPowerStatus OBJECT-TYPE
        SYNTAX      INTEGER {priOnSecStandby(0),
                             secOnPriStandby(1),
                             priOnSecFailed(2),
                             secOnPriFailed(3)}
        MAX-ACCESS  read-only
        STATUS      current
        DESCRIPTION
            "Describes the status of the power supply in BS."
        ::= { wmanPriNotificationObjectsEntry 1 }

wmanPriFanStatus OBJECT-TYPE
        SYNTAX      INTEGER {fanFail(1),
                             fanSucc(2)}
        MAX-ACCESS  read-only
        STATUS      current
        DESCRIPTION
            "Describes the status of the fan in BS."
        ::= { wmanPriNotificationObjectsEntry 2 }

wmanPriTemperatureStatus OBJECT-TYPE
        SYNTAX      INTEGER {lowTempReached(1),
                             highTempReached(2),
                             temperatureNormal(3)}
        MAX-ACCESS  read-only
        STATUS      current
```

```
        DESCRIPTION
            "lowTempReached event is generated when temperature goes
             below wmanPriTempLowAlarmThreshold.
             temperatureNormal event is generated when temperature
             goes above wmanPriTempLowAlarmRestoredThreshold or
             below wmanPriTempHighAlarmRestoredThreshold after alarm.
             highTempReached event is generated when temperature goes
             above wmanPriTempHighAlarmThreshold."
        ::= { wmanPriNotificationObjectsEntry 3 }

wmanPriPowerStatusInfo OBJECT-TYPE
        SYNTAX      OCTET STRING (SIZE(0..255))
        MAX-ACCESS  read-only
        STATUS      current
        DESCRIPTION
            "Display the power supply ststus in text form."
        ::= { wmanPriNotificationObjectsEntry 4 }

wmanPriFanStatusInfo OBJECT-TYPE
        SYNTAX      OCTET STRING (SIZE(0..255))
        MAX-ACCESS  read-only
        STATUS      current
        DESCRIPTION
            "Display the fan ststus in text form."
        ::= { wmanPriNotificationObjectsEntry 5 }

wmanPriTemperatureStatusInfo OBJECT-TYPE
        SYNTAX      OCTET STRING (SIZE(0..255))
        MAX-ACCESS  read-only
        STATUS      current
        DESCRIPTION
            "Display the temperature ststus in text form."
        ::= { wmanPriNotificationObjectsEntry 6 }

--
-- Base station Notification Trap Definitions
--
wmanPriPowerStatusChangeTrap NOTIFICATION-TYPE
        OBJECTS     {wmanPriDeviceIndex,
                     wmanPriPowerStatus,
                     wmanPriPowerStatusInfo}
        STATUS      current
        DESCRIPTION
            "An event to report a change in the status of the power
             supply in BS. Typically it represents a failure."
        ::= { wmanPriTrapPrefix 1 }

wmanPriFanStatusTrap NOTIFICATION-TYPE
        OBJECTS     {wmanPriDeviceIndex,
                     wmanPriFanStatus,
                     wmanPriFanStatusInfo}
        STATUS      current
        DESCRIPTION
            "An event to report the status of the fan inside the BS."
```



```
        ::= { wmanPriTrapPrefix 2 }

wmanPriTemperatureChangeTrap NOTIFICATION-TYPE
        OBJECTS     {wmanPriDeviceIndex,
                     wmanPriTemperatureStatus,
                     wmanPriTemperatureStatusInfo}
        STATUS      current
        DESCRIPTION
            "An alarm event will be generated when the temperature goes
             above wmanPriTempHighAlarmThreshold or below
             wmanPriTempLowAlarmThreshold. An event reporting the
             alarm has disappeared when the temperature goes below
             wmanPriTempHighAlarmRestoredThreshold or above
             wmanPriTempLowAlarmRestoredThreshold."
        ::= { wmanPriTrapPrefix 3 }

--
-- Conformance Information
--
wmanPriMibConformance OBJECT IDENTIFIER ::= {wmanPriMib 2}
wmanPriMibGroups      OBJECT IDENTIFIER ::= {wmanPriMibConformance 1}
wmanPriMibCompliances OBJECT IDENTIFIER ::= {wmanPriMibConformance 2}

-- compliance statements
wmanPriMibCompliance MODULE-COMPLIANCE
        STATUS      current
        DESCRIPTION
            "The compliance statement for devices that implement
            Wireless MAN interfaces as defined in IEEE Std 802.16-2004."

        MODULE  -- wmanPriMib

        GROUP wmanPriMibGroup -- optional group
        DESCRIPTION
            "This group is optional for Base Station."

        GROUP wmanPriMibNotificationGroup -- optional group
        DESCRIPTION
            "This group is optional for Base Station."

        ::= { wmanPriMibCompliances 1 }

wmanPriMibGroup     OBJECT-GROUP
        OBJECTS {--
                 wmanPriTrapControlRegister,
                 wmanPriDeviceIndex,
                 wmanPriTempLowAlarmThreshold,
                 wmanPriTempLowAlarmRestoredThreshold,
                 wmanPriTempHighAlarmThreshold,
                 wmanPriTempHighAlarmRestoredThreshold,
                 wmanPriPowerStatus,
                 wmanPriFanStatus,
                 wmanPriTemperatureStatus,
                 wmanPriPowerStatusInfo,
```

```
                 wmanPriFanStatusInfo,
                 wmanPriTemperatureStatusInfo}
        STATUS       current
        DESCRIPTION
            "This group contains objects for wmanPriMib."
        ::= { wmanPriMibGroups 1 }

wmanPriMibNotificationGroup     NOTIFICATION-GROUP
        NOTIFICATIONS {wmanPriPowerStatusChangeTrap,
                       wmanPriFanStatusTrap,
                       wmanPriTemperatureChangeTrap}
        STATUS       current
        DESCRIPTION
            "This group contains event notifications for wmanPriMib."
        ::= { wmanPriMibGroups 2 }
END
```


Annex I

(informative)

Alternative variation of replay protection for management messages in limited mobility environment

I.1 Introduction

The text below supports the legacy CMAC key generation algorithms. This legacy CMAC key generation algorithm is designated CMAC-0.

If bit 1 in the MAC Mode TLV in 11.8.4.3 TLV in the SBC-REQ message that is sent by the MS, is set to ‘1’, the BS may choose to invoke the CMAC-0 mode of CMAK_KEY generation. To invoke this mode, the BS shall set Bit 1 in the MAC Mode TLV of the SBC-RSP message to ‘1’.

(Refer to 7.2.2.2.9.)

I.2 CMAC-0 Keys Derivation

If bit 1 of the MAC Mode TLV is set to ‘1’ (see 11.8.4.3), the keys used for CMAC key and for KEK are derived as follows:

CMAC_KEY_U | CMAC_KEY_D | KEK⇐Dot16KDF(AK, SS MAC Address | BSID | “CMAC_KEYS+KEK”, 384)

CMAC_KEY_GD⇐Dot16KDF(GKEK, “GROUP CMAC KEY”,128) (Used for broadcast MAC message such as a PKMv2 Group-Key-Update-Command message for GTEK Update Mode)

I.3 Caching Requirement and HMAC/CMAC_PN_* Counters

(Refer to 7.2.2.4.1.)

For the CMAC-0 mode, if the cached AK and associated context is lost by either the BS or SS, no new AKs can be derived on handover.

For the CMAC-0 mode, the initial values of the CMAC_PN_* counters are zero. These counters are cached by the MS and BS for the life of the AK.

I.4 CMAC-0 Key Derivation figure

Refer to Figure I.1.

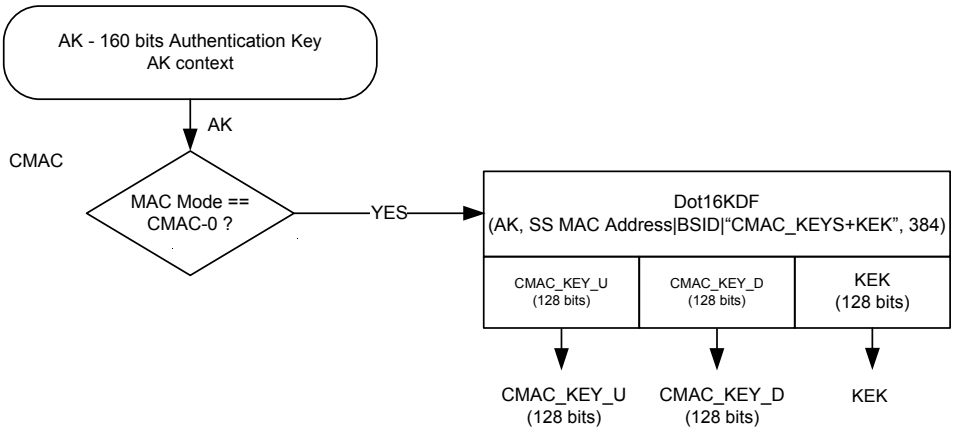

Figure I.1—CMAC-0 Key Derivation

Annex J

(informative)

Handover, Ranging, and MIH procedures

J.1 Hard handover procedures

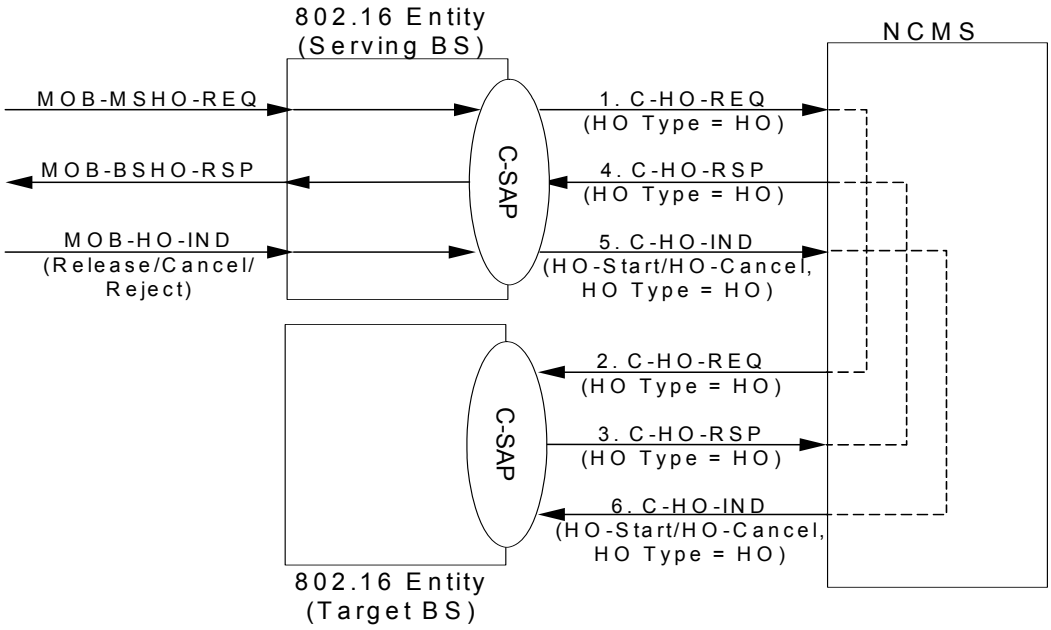

Figure J.1—Example primitive flow of HO initiated by MS

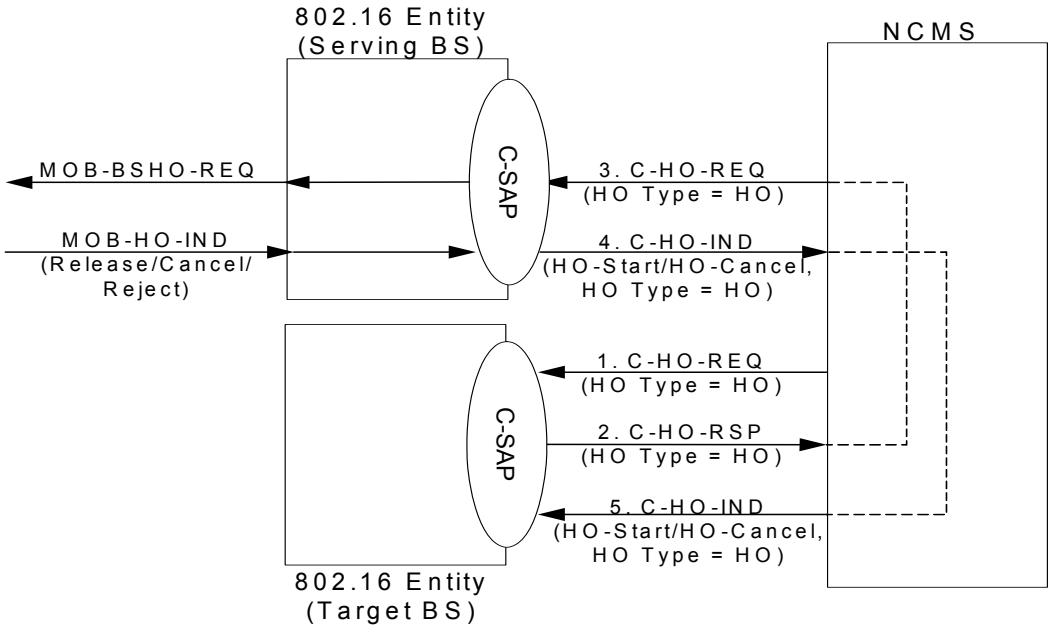

Figure J.2—Example primitive flow of HO initiated by the NCMS

J.2 End-to-End Handover procedures

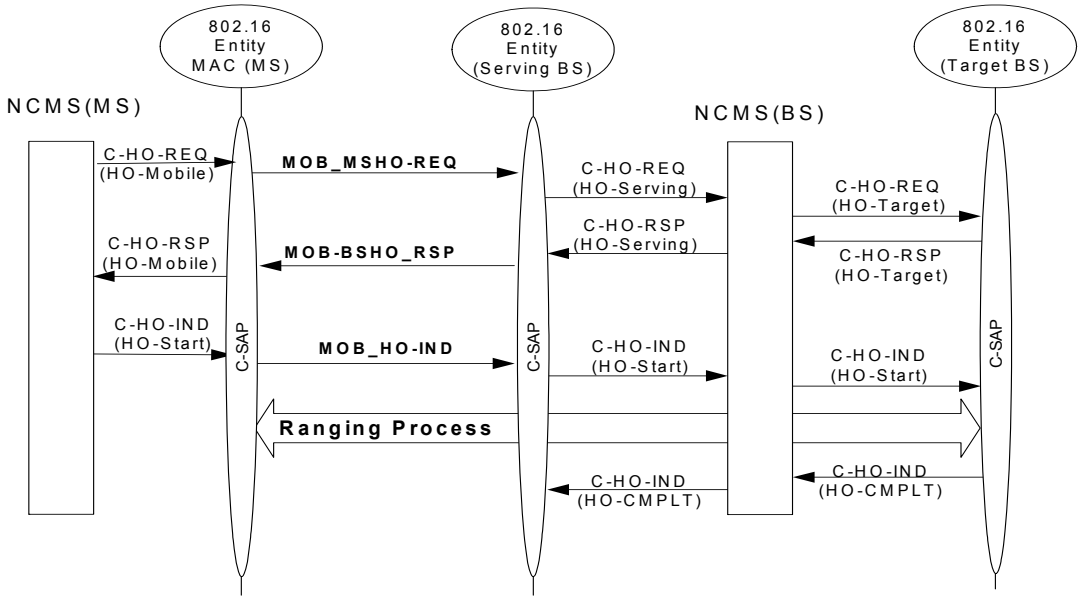

Figure J.3—MS Initiated HO: End-to-End HO exchange between MS, Serving BS, and Target BS

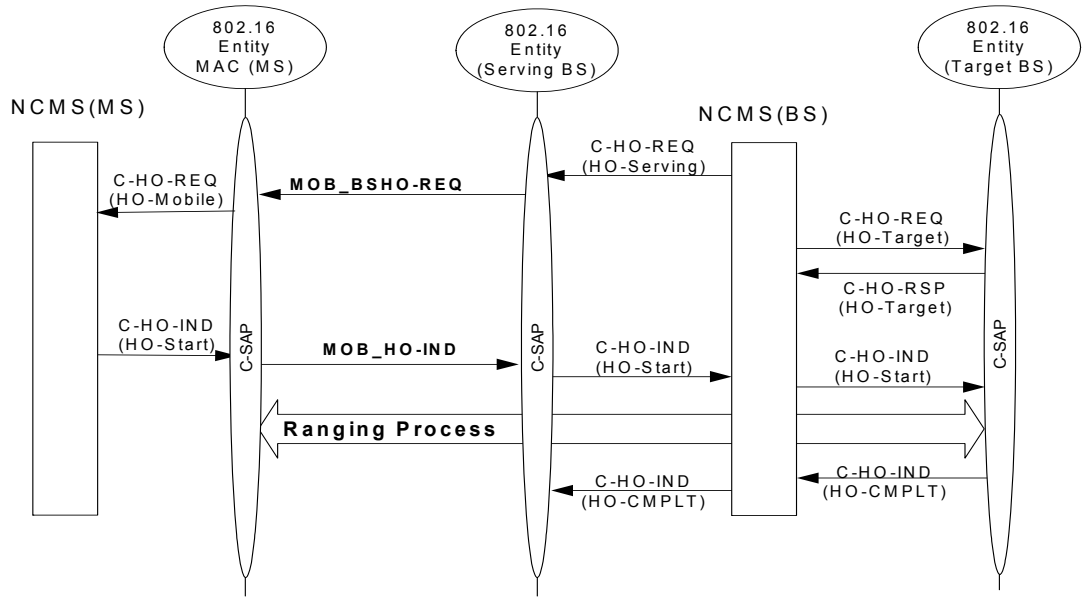

Figure J.4—BS Initiated HO: End-to-End HO exchange between MS, Serving BS, and Target BS

J.3 Fast base station switching procedures

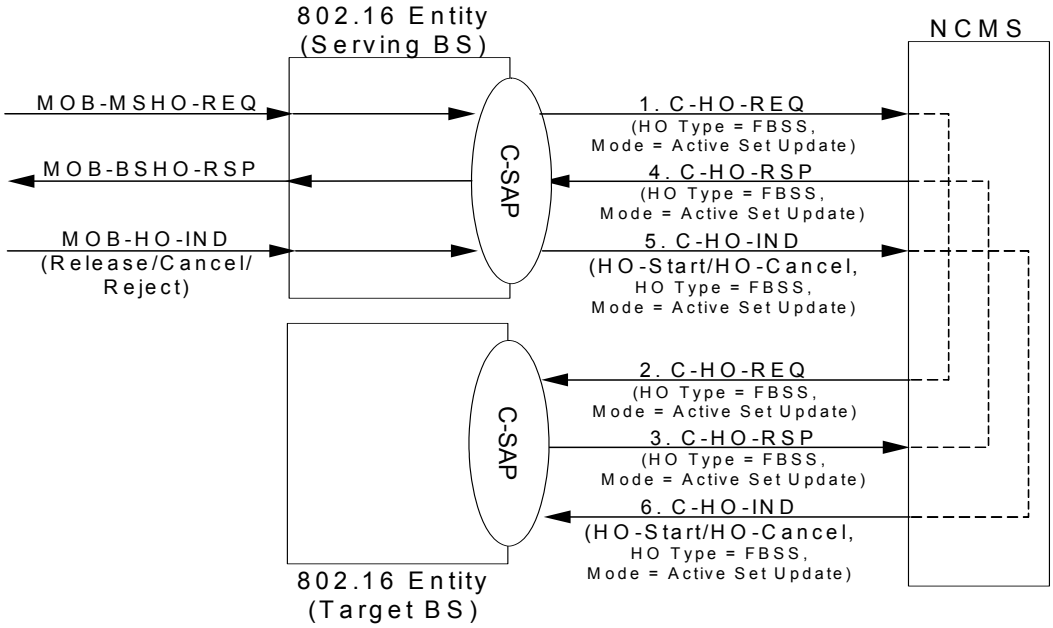

Figure J.5—Example primitive flow of Active Set Update (Add)

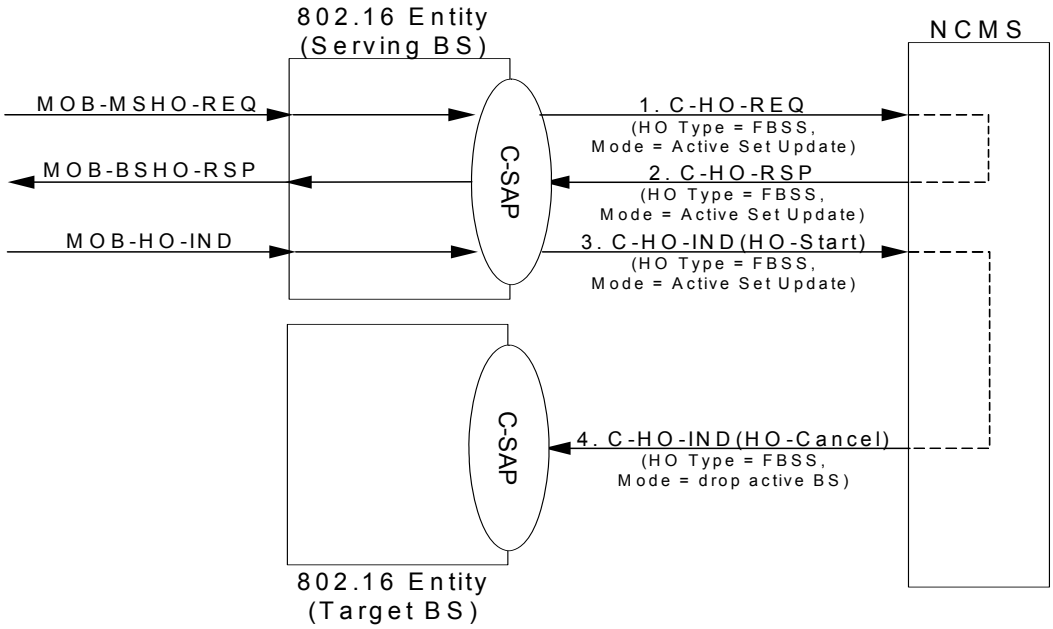

Figure J.6—Example primitive flow of Active Set Update (Drop)

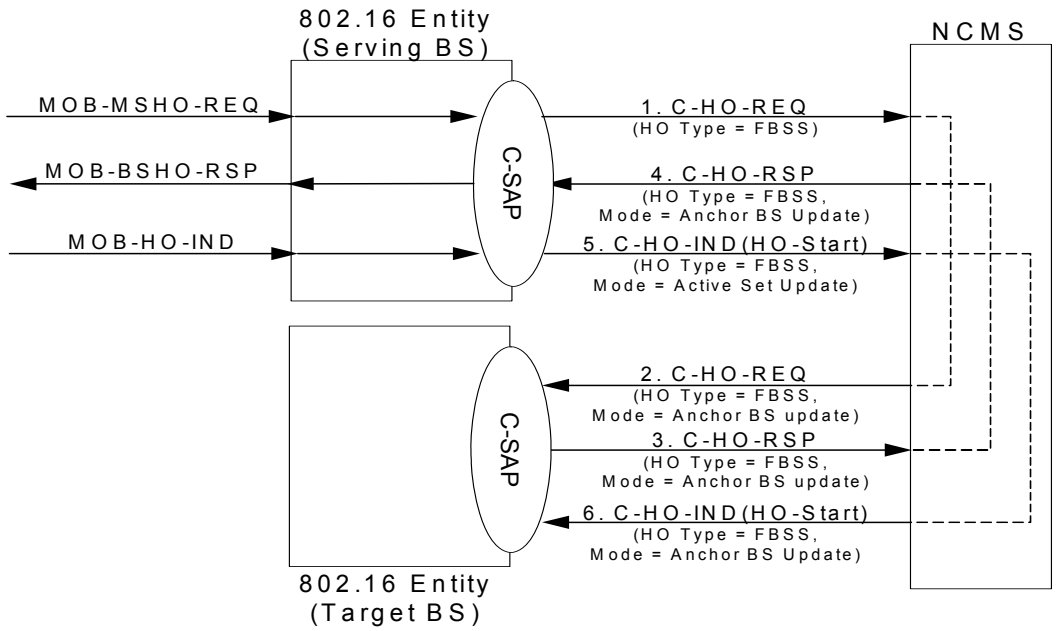

Figure J.7—Example primitive flow of Anchor BS Update (Using MAC messages)

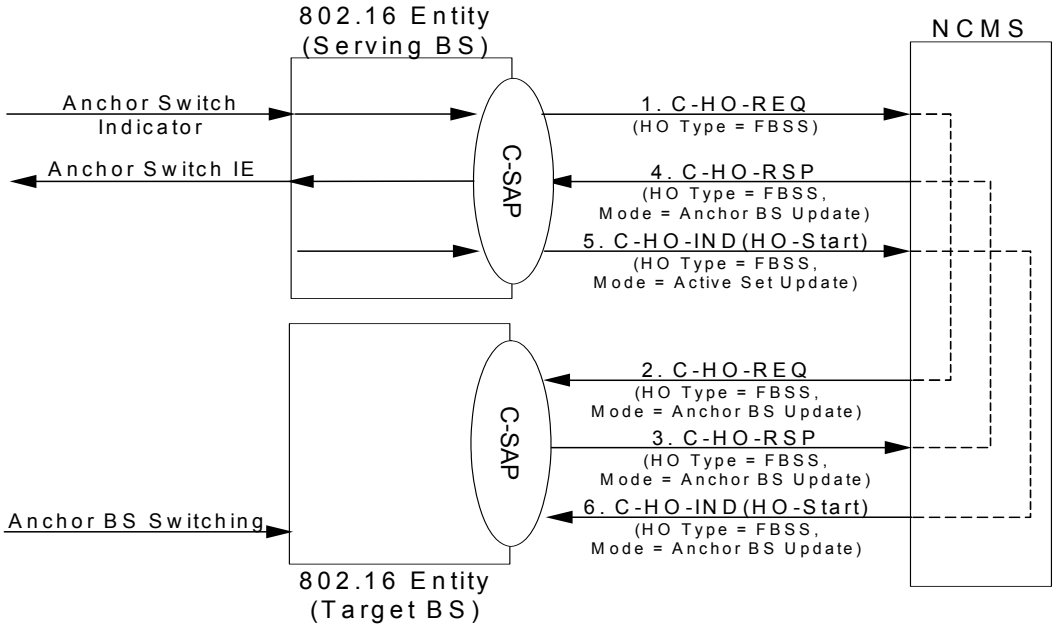

Figure J.8—Example primitive flow of Anchor BS Update (using selection feedback mechanism)

J.4 Ranging Primitives usage

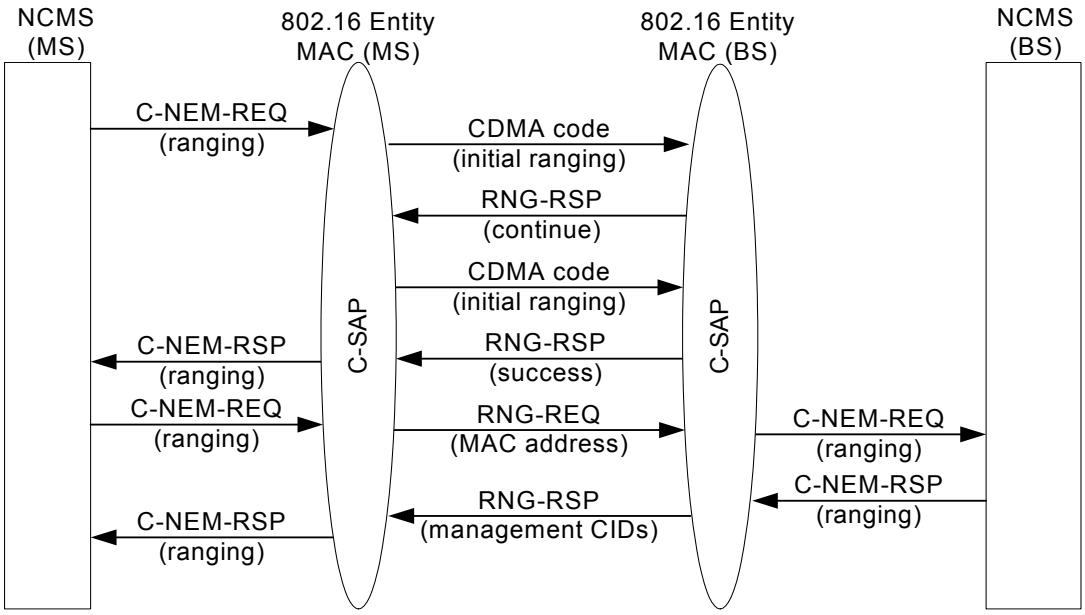

Figure J.9—The use of Ranging Primitives

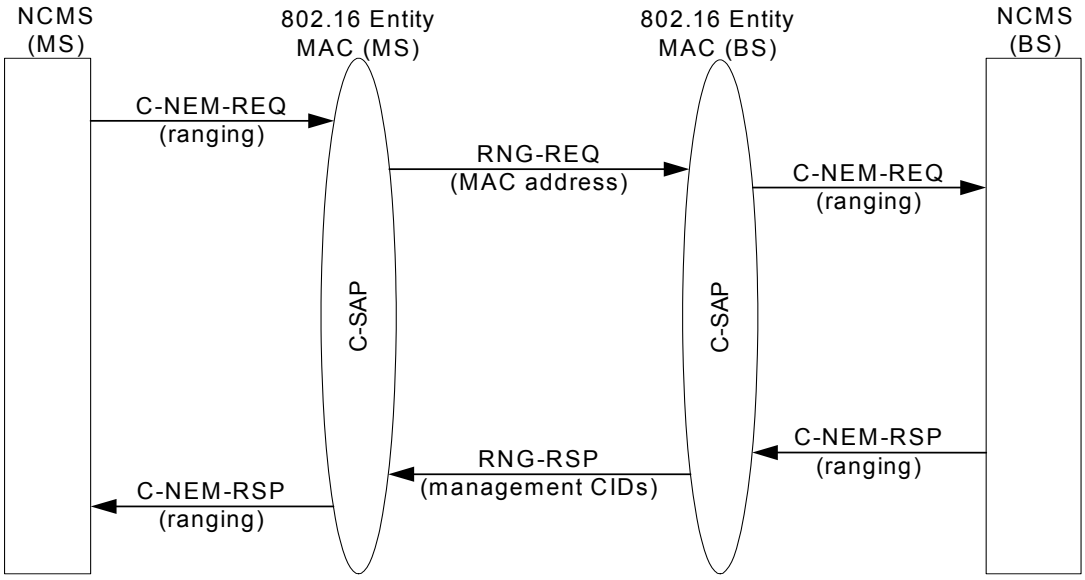

Figure J.10—The use of Fast Ranging Primitives

J.5 MIH Exchange procedure prior to Authentication

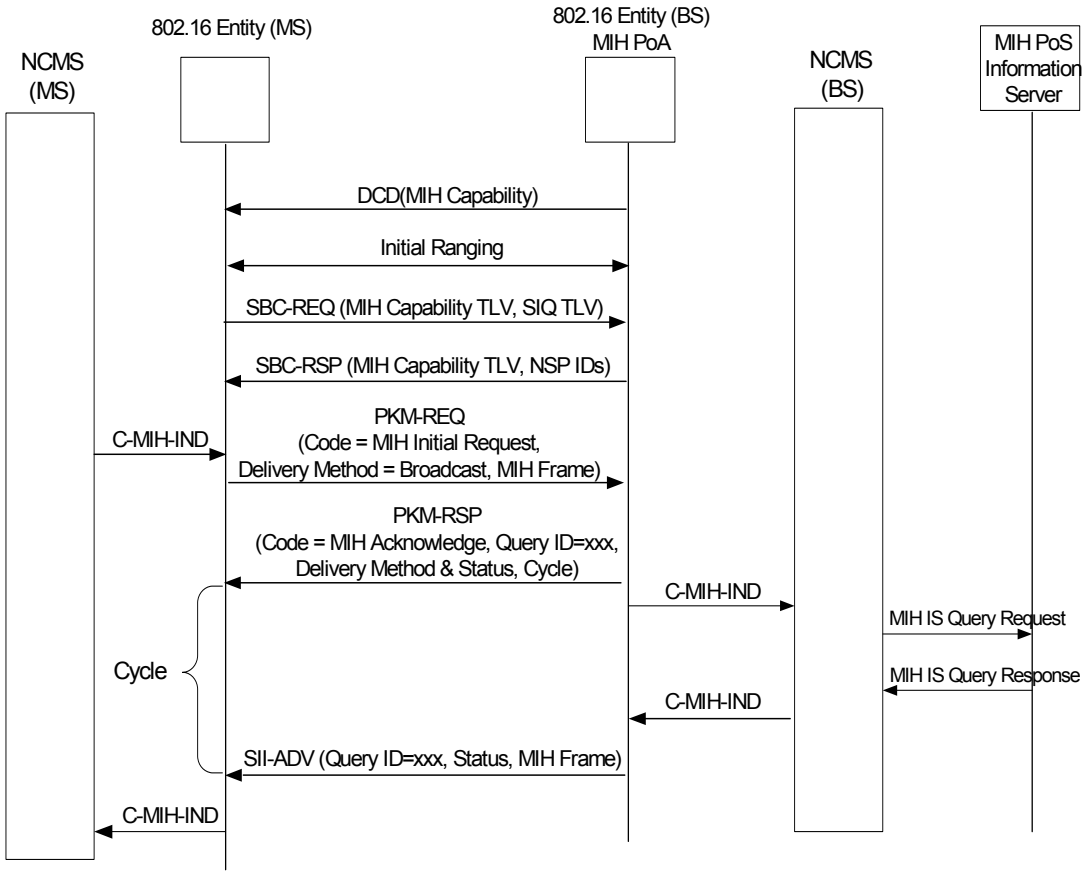

Figure J.11—Pre-authenticated MIH exchange using broadcast delivery method

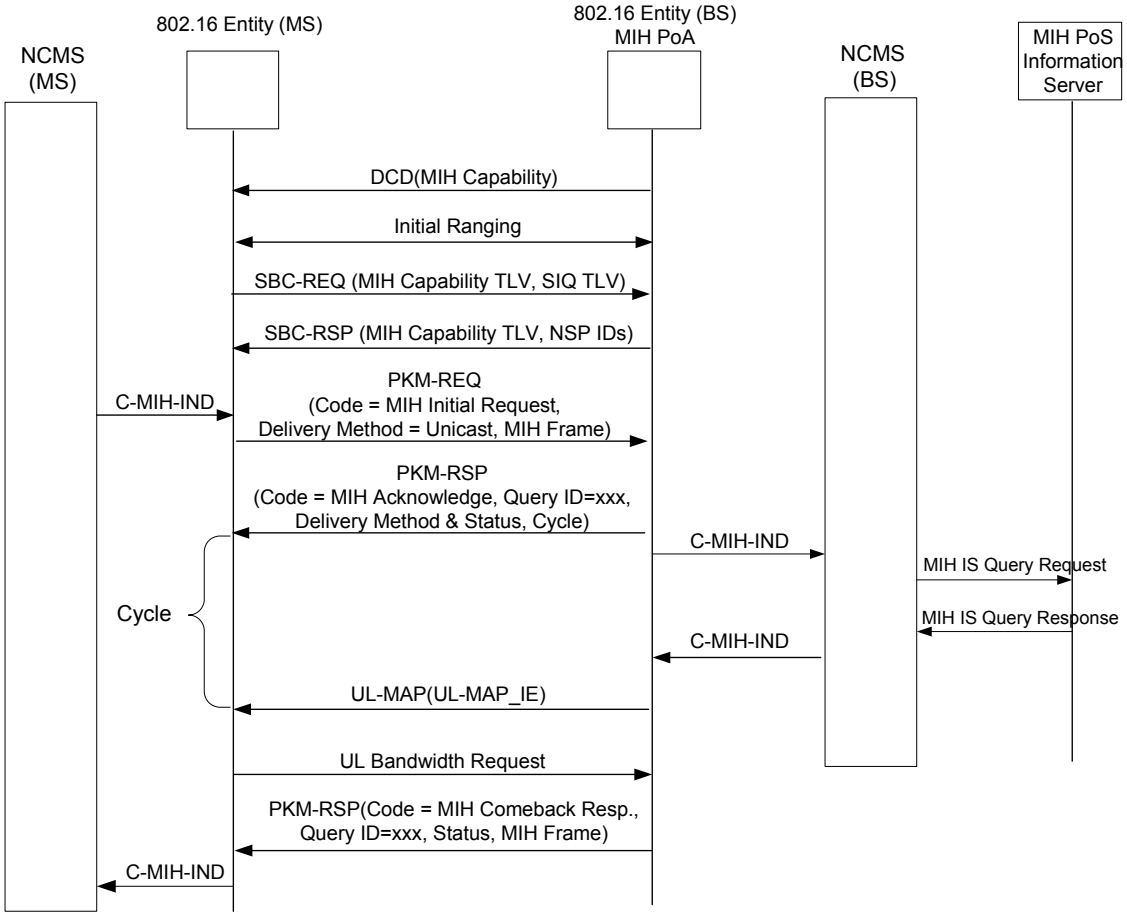

Figure J.12—Pre-authenticated MIH exchange using unicast delivery method

Annex K

(informative)

U-TDOA measurement

Annex K describes two methods for U-TDOA measurement: the General U-TDOA Method, for any FRF (Frequency Reuse Factor); and the Special U-TDOA Method, for FRF = 1. Figure K.1 shows a diagram for U-TDOA measurement.

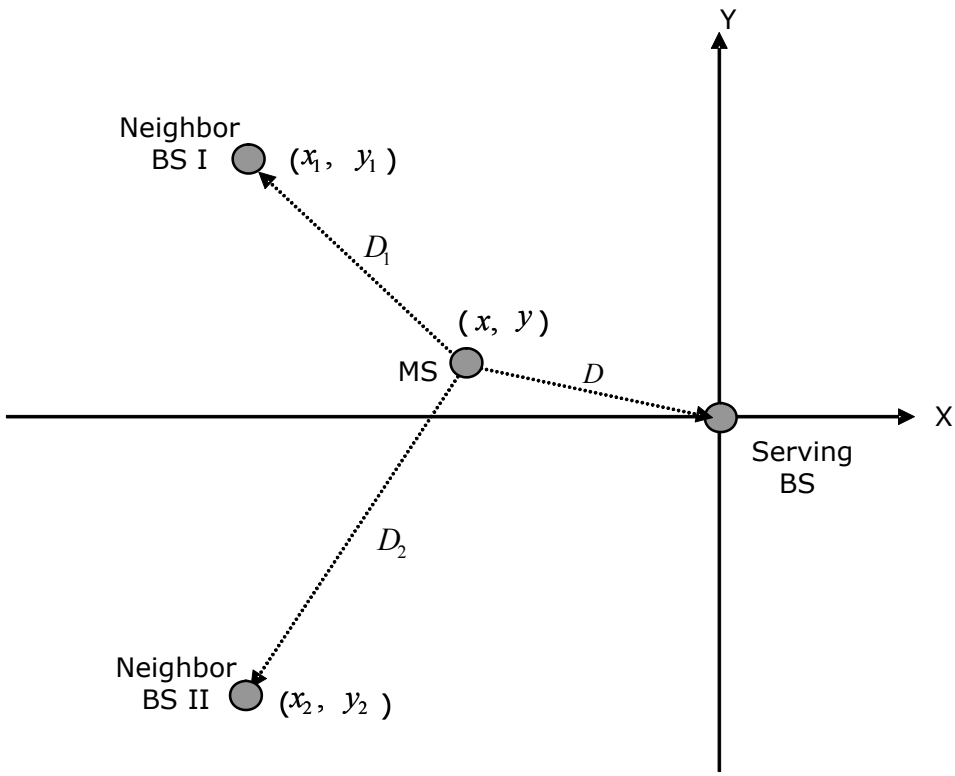

Figure K.1—Network Diagram for U-TDOA Measurement

The U-TDOA measurement algorithm is based on the ranging mechanism as specified in this standard. The ranging capability is primarily designed to allow an MS to synchronize with a BS in terms of time and frequency and may not provide sufficient accuracy for LBS applications such as E911 Phase II. It is recommended that the Automatic Timing Correction (ATC) algorithm in the BS should use better resolution (e.g., in the increments of 50 ns or 25 ns) than what is required for the timing adjustment increments of the ranging procedure.

K.1 General U-TDOA method

When the position of an MS is determined using U-TDOA, the MS ranges with the serving BS and two or more neighboring BSs. Figure K.2 shows an example of a timing diagram of U-TDOA measurement. This example is based on the following assumptions:

a) The MS aligns the frame start to the received DL from the serving BS before ranging with the serving BS.
b) The MS aligns the frame start to the received DL from the neighbor BS before ranging with the neighbor BS.
c) The MS does not make any timing adjustments relatively to the aligned frame start between ranging with the two BS.

BS calculates t_2 and t_3 during the ranging process.

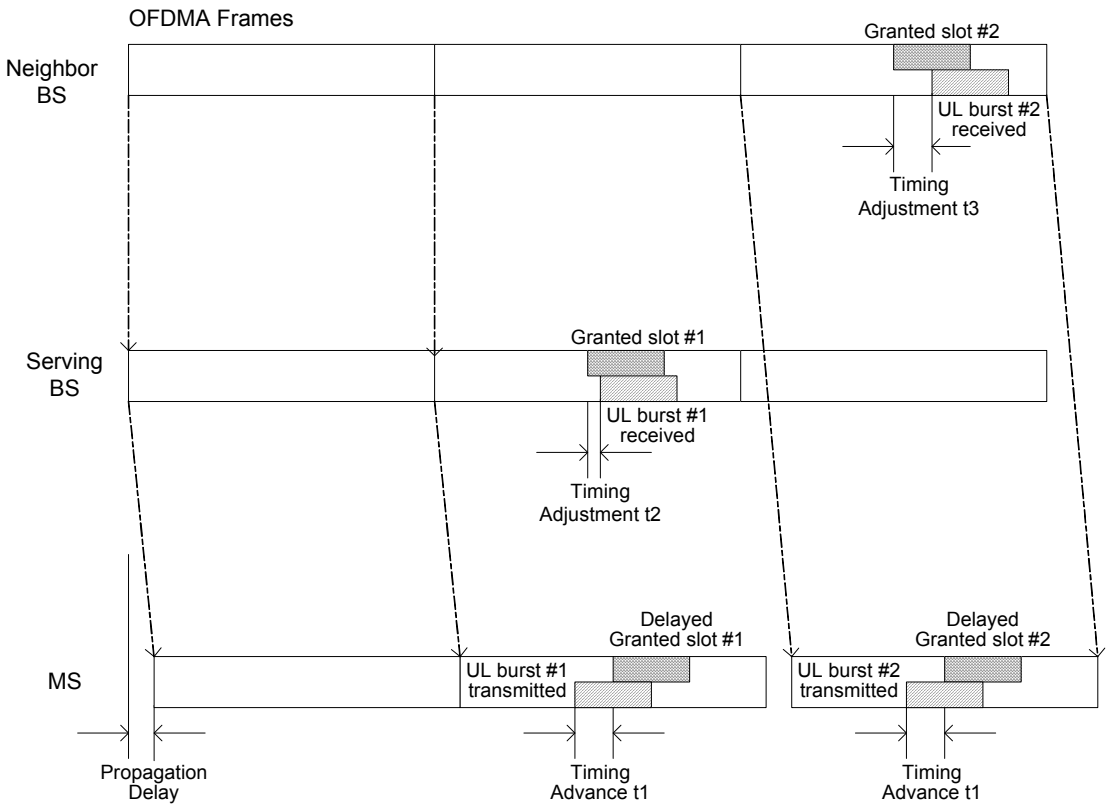

Figure K.2—U-TDOA Measurement Timing diagram (General U-TDOA method)

The MS ranges sequentially with the serving BS and neighbor BS. The serving BS and the neighbor BS measure the Timing Adjustment t_2 and t_3 respectively, and the neighbor BS reports t_3 to the serving BS. The serving BS calculates the difference in propagation delay = $(t_2 - t_3)/2$ and, by multiplying this difference by the speed of light, the difference of the MS's distance to the serving BS and neighbor BS.

The call flow in Figure K.3 shows the messaging between an MS, its serving BS and a neighbor BS in support of U-TDOA. The call flow can be extended to support additional neighbor BSs. The following are the assumptions for the call flow:

— Serving BS and neighbor BS are operating with the same frame sizes.
— The frames at the serving BS and neighbor BS are synchronized.
— MS can communicate with the serving BS and neighbor BS.

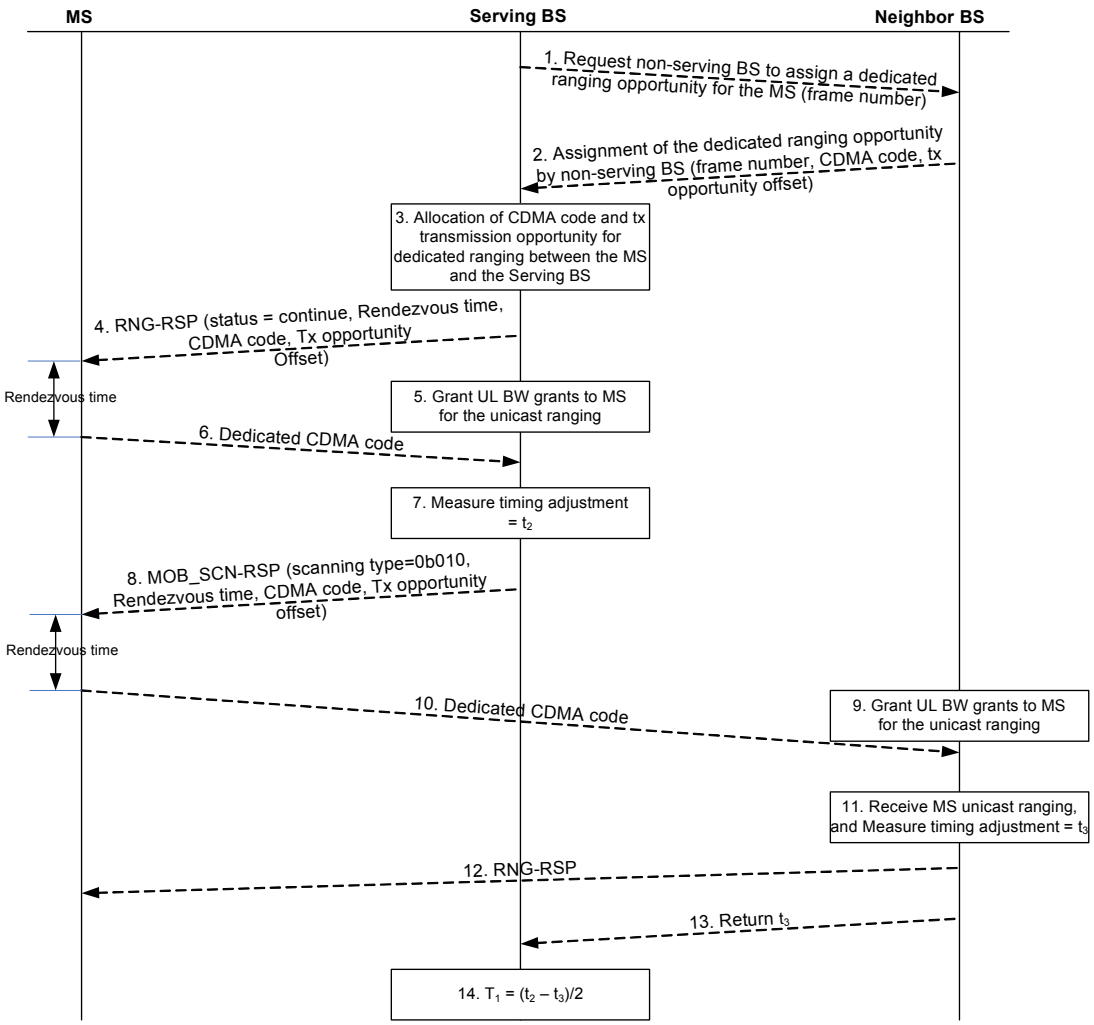

Figure K.3—U-TDOA measurement algorithm (General U-TDOA method)

1) Serving BS requests neighbor BS to assign the dedicated ranging opportunity for the MS.
2) Neighbor BS confirms the allocation of the dedicated ranging opportunity for the MS and returns the related parameters used for dedicated ranging between the MS and the neighbor BS.
   — Frame Number
   — CDMA code
   — Transmission opportunity offset
3) Serving BS allocates a CDMA code and transmission opportunity for dedicated ranging between the MS and the Serving BS.
4) Serving BS sends an unsolicited RNG-RSP message to the MS to request the MS to initiate dedicated ranging. The following parameters are included in this message:
   — Rendezvous time
   — CDMA code
   — Transmission opportunity offset

5) Serving BS allocates a dedicated ranging region and signals it in the UL-MAP in the frame immediately following the rendezvous time sent in the RNG-RSP message in step 4). Serving BS sets the dedicated ranging indicator in the UL-MAP_IE to 1.
6) If there is a dedicated ranging region at the rendezvous time, the MS determines the specific region it should use for transmission of the dedicated CDMA code by applying the offset defined by the "transmission opportunity offset" field in RNG-RSP message received in step 4) to the dedicated ranging region definition in the UL-MAP received from Serving BS.
7) Serving BS measures Timing Adjustment t_2
8) Serving BS sends autonomous MOB_SCN-RSP with scanning type = 0b10 (scan association with coordination) to force MS performing initial ranging after scan. The related parameters assigned by neighbor BS are included in the MOB_SCN-RSP message.
   — Rendezvous time
   — CDMA code
   — Transmission opportunity offset
9) Neighbor BS allocates a dedicated ranging region and signals it in the UL-MAP in the frame immediately following the rendezvous time sent in the MOB_SCN-RSP message sent in step 8). The BS sets the dedicated ranging indicator in the UL-MAP_IE to 1.
10) If there is a dedicated ranging region at the rendezvous time, the MS determines the specific region it should use for transmission of the dedicated CDMA code by applying the offset defined by the "transmission opportunity offset" field in the MOB_SCN-RSP message received in step 8) to the dedicated ranging region definition in the UL-MAP received from neighbor BS.
11) Neighbor BS receives the assigned CDMA code, and measures Timing Adjustment t_3.
12) Neighbor BS returns RNG-RSP to MS.
13) Neighbor BS returns t_3 to serving BS.
14) Serving BS calculates the U-TDOA as follows: $T_1 = \frac{(t_2 - t_3)}{2}$

K.2 Special U-TDOA method

When the position of an MS is determined using U-TDOA, the MS ranges with the serving BS and two or more neighboring BSs. Figure K.4 shows an example of a timing diagram of U-TDOA measurement.

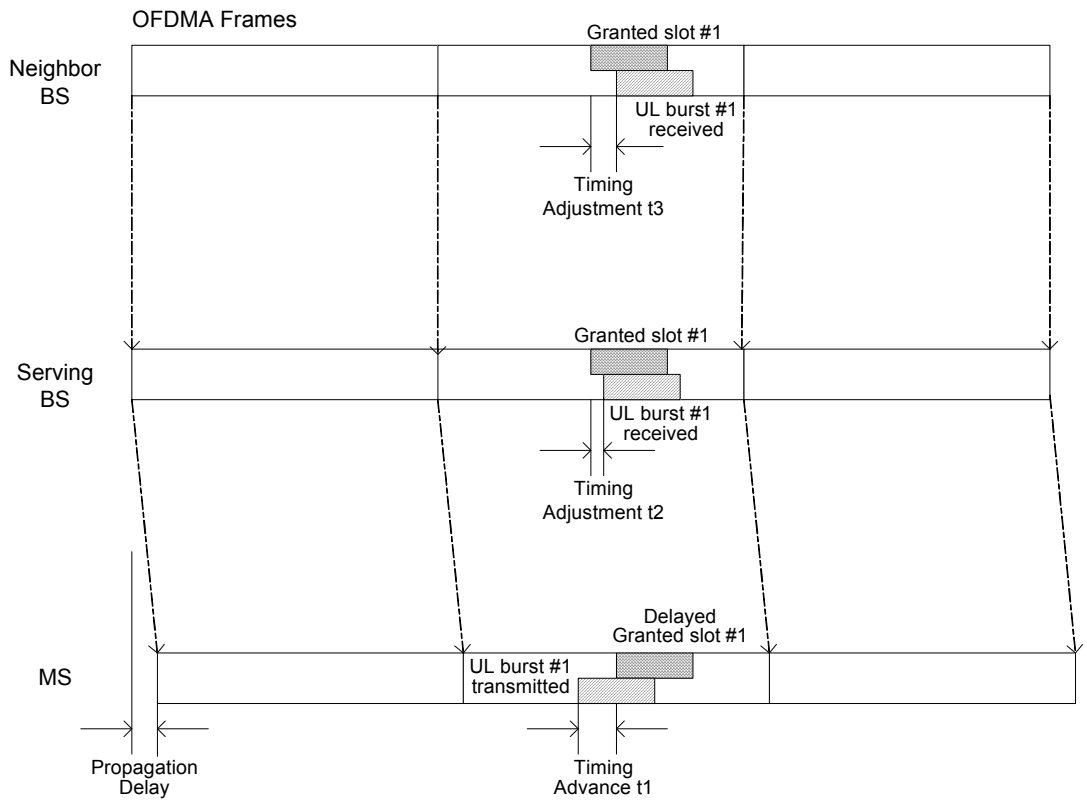

Figure K.4—U-TDOA Measurement Timing diagram (Special U-TDOA method)

In this example, the MS transmits a CDMA code that is received by both the serving BS and neighbor BS. The serving BS and neighbor BS measure Timing Adjustment t_2 and t_3 respectively, and the neighbor BS reports t_3 to the serving BS. The serving BS calculates the difference in propagation delay = $t_2 - t_3$ and, by multiplying this difference by the speed of light, determines the difference of the MS's distance to the serving BS and neighbor BS.

Figure K.5 shows the U-TDOA measurement algorithm that includes a neighbor BS. The algorithm can be duplicated to support additional neighbor BS. Here are the assumptions for the algorithm.

— Serving BS and neighbor BS are operating on the same band (Frequency reuse = 1)
— Serving BS and neighbor BS are operating on the same frame duration
— The frames in both serving BS and neighbor BS are synchronized
— MS can communicate with both serving BS and neighbor BS

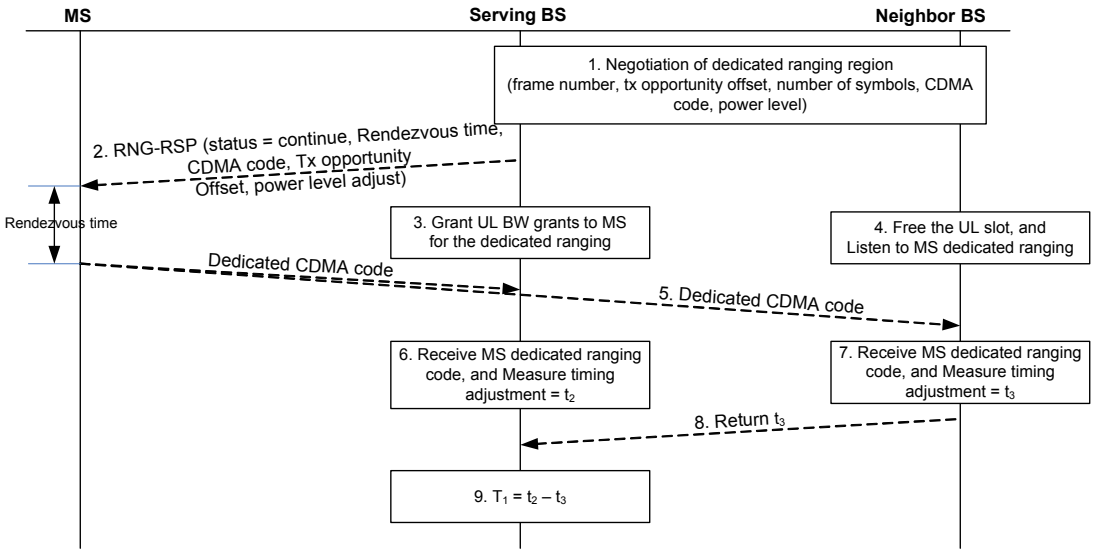

Figure K.5—U-TDOA Measurement Algorithm (Special U-TDOA method)

1) Serving BS and neighbor BS negotiate the allocation of a dedicated ranging region for the MS.
   — Frame Number
   — Transmission opportunity offset
   — Number of Symbols
   — CDMA code
   — Power Level
2) Serving BS sends an unsolicited RNG-RSP message to the MS to request the MS to initiate dedicated ranging. The following parameters are included in this message:
   — Rendezvous time
   — CDMA code
   — Transmission opportunity offset
3) The serving BS allocates a dedicated ranging region for the MS to do dedicated ranging at the pre-assigned rendezvous time and listens to the dedicated ranging code from the MS.
4) At the same time, the neighbor BS shall make no allocations in that dedicated ranging region, and the neighbor BS listens for the dedicated ranging code from the MS.
5) If there is a dedicated ranging region at the rendezvous time, the MS determines the specific region it should use for transmission of the dedicated CDMA code by applying the offset defined by the "transmission opportunity offset" field in RNG-RSP message received in step 2) to the dedicated ranging region definition in the UL-MAP received from Serving BS. The transmission power shall be changed based on the power level adjust parameter included in the received RNG-RSP message to allow the neighbor BS to receive the code successfully.
6) The neighbor BS measures Timing Adjustment t_3.
7) The serving BS measures Timing Adjustment t_2.
8) The neighbor BS returns t_3 to serving BS.
9) Serving BS calculates the U-TDOA as follows: $T_1 = t_2 - t_3$

Annex L

(informative)

Example Encapsulation of an IEEE 802.16 entity

L.1 Introduction

Figure 1 in 1.4 of this standard shows the IEEE 802.16 entity reference model.

The Network Control and Management System (NCMS) is not part of IEEE 802.16 standards and is treated as a "black box." It may be distributed with parts residing on different nodes in a network. Part of the NCMS may be physically collocated with the IEEE 802.16 entity. In this annex, this part is referred to as NCMS-E. The remaining part of the NCMS may be physically distributed across one or more other network entities. This part of the NCMS is referred to as NCMS-N. Figure L.1 shows the partition of the NCMS into NCMS-E and NCMS-N.

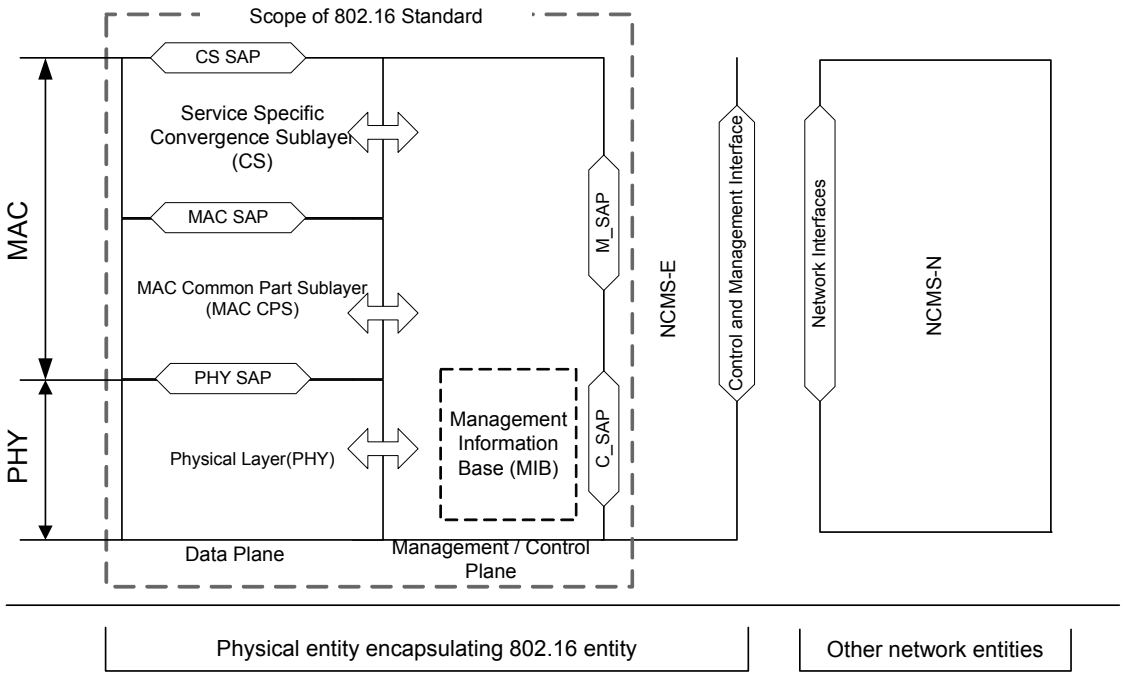

Figure L.1—Possible distribution of the NCMS

The NCMS-E may have its own software platform and network protocol implementation allowing it to communicate with external entities in the NCMS-N.

L.1.1 SNMP Agent

NCMS-E may provide an SNMP Agent compliant to IETF RFC 3418 and the SNMP/TCP/IP protocol stack to allow for interactions with an SNMP manager. Subclause 9.4.1 provides some specific requirements for BSs and SSs implementing the SNMP protocol.

L.1.2 CORBA

The NCMS-E may provide an Object Request Broker (ORB) and implement a communications protocol stack such as IIOP/TCP/IP allowing it to interact with components on other network entities within NCMS-N based on the CORBA architecture. The messages available to a manager in the NCMS-N are specified using Interface Description Language (IDL). These messages encapsulate the interactions with the MIB.

L.1.3 Web services

The IEEE 802.16 entity could be managed through Web Services. In this case, the NCMS-E may support the SOAP/HTTP/TCP/IP protocol stack, which would be used between a manager in the NCMS and the NCMS-E to exchange XML-based messages. The WSs, which encapsulate access to the MIB, may be described using WS Description Language (WSDL).

Annex M

(informative)

Network Control and Management System (NCMS)

This abstraction is detailed in Figure M.1 to show the different functional entities that make up such a Network Control and Management System. These entities may be centrally located or distributed across the network. The exact functionality of these entities and their services is outside the scope of this standard, but shown here for illustration purposes and to better enable the description of the management and control procedures.

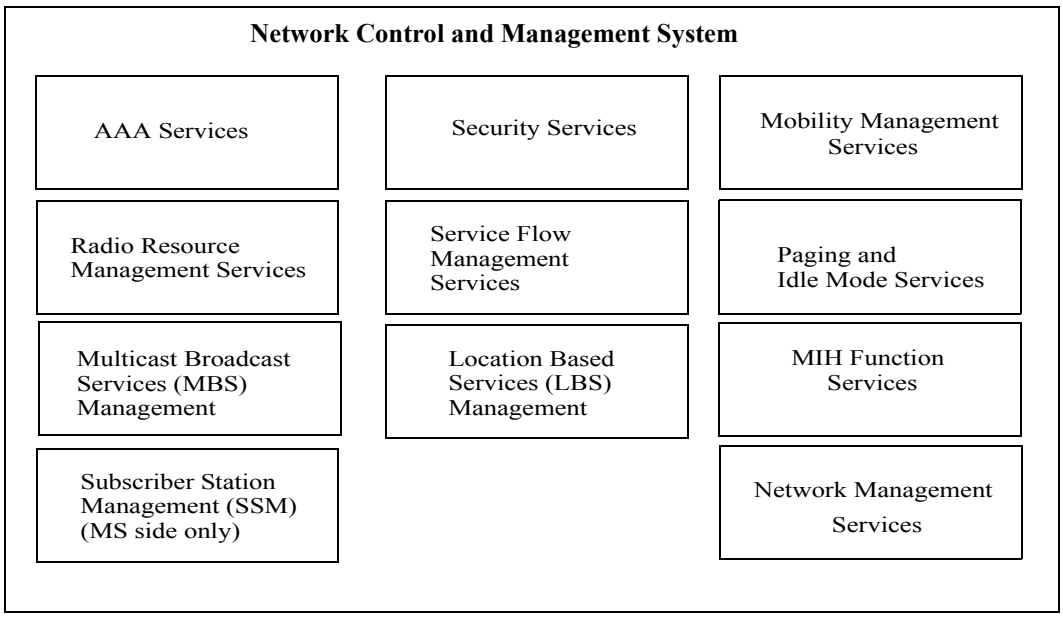

Figure M.1—Illustration of the Network Control and Management System (Informational)

NCMS protocols are not defined in this standard; however, information elements (IEs) and protocol primitives for these IEs are exposed using primitives via SAP. This includes MAC and PHY layer context information used by NCMS protocols to manage and control the air interface. NCMS service manifestations on the SS/MS and BS may have different configurations and functions.

NOTE—For the NAS-Port-Type RADIUS Attribute 61 (IETF RFC 2865), the IEEE 802.16 AAA service in the NCMS is assigned the value “27.”

Annex N

(informative)

Processing of CMAC_KEY_COUNT by the authenticator

The Authenticator is assumed to maintain the $CMAC\_KEY\_COUNT_N$ for every MS as part of its security context, called the AK Context, associated with each PMK.

Upon successful completion of the PKMv2 Authentication or Re-authentication, and creation of a new PMK, the Authenticator sets the $CMAC\_KEY\_COUNT_N$ for the MS to 1. In particular, setting the counter to 1 occurs when the Authenticator receives indication about the successful completion of EAP-based authentication. The Authenticator never sets the value to zero and only sets the value to 1 after a new PMK has been established. Effectively, the Authenticator maintains the next expected value of the CMAC_KEY_COUNT to be reported by the MS during the next access.

Upon receiving a request for the AK context from the BS, the Authenticator returns the current value of $CMAC\_KEY\_COUNT_N$.

Upon receiving the indication of a successful Secure Location Update or network re-entry from a BS or an indication of a handover cancellation from the serving BS containing the $CMAC\_KEY\_COUNT_M$, the Authenticator compares it to the locally maintained value of $CMAC\_KEY\_COUNT_N$ and selects the largest of the two as the valid value of the counter, and then increments the value of the counter by one, i.e.,

$$CMAC\_KEY\_COUNT_N = MAX(CMAC\_KEY\_COUNT_N, CMAC\_KEY\_COUNT_M) + 1$$

Annex O

(informative)

PAPR for given preamble modulation index

Table O.1—PAPR for Preamble modulation series for 2048-FFT mode

Index	PAPR (informative)
0	4.33
1	4.21
2	4.32
3	4.36
4	4.49
5	4.49
6	4.35
7	4.48
8	4.48
9	4.55
10	4,54
11	4.53
12	4.55
13	4.54
14	4.52
15	4.41
16	4.47
17	4.54
18	4.55
19	4.66
20	4.52
21	4.58
22	4.63
23	4.72
24	4.64

Table O.1—PAPR for Preamble modulation series for 2048-FFT mode *(continued)*

Index	PAPR (informative)
25	4.52
26	4.43
27	4.76
28	4.67
29	4.51
30	4.74
31	4.78
32	4.61
33	4.68
34	4.63
35	4.58
36	4.68
37	4.60
38	4.71
39	4.60
40	4.63
41	4.65
42	4.84
43	4.66
44	4.65
45	4.58
46	4.68
47	4.81
48	4.72
49	4.62
50	4.85
51	4.59
52	4.70
53	4.66
54	4.88
55	4.59
56	4.80
57	4.78

Table O.1—PAPR for Preamble modulation series for 2048-FFT mode *(continued)*

Index	PAPR (informative)
58	4.70
59	4.91
60	4.73
61	4.74
62	4.80
63	4.63
64	4.89
65	4.89
66	4.74
67	4.75
68	4.77
69	4.64
70	4.64
71	4.63
72	4.82
73	4.86
74	4.78
75	4.73
76	4.68
77	4.67
78	4.69
79	4.84
80	4.75
81	4.72
82	4.70
83	4.74
84	4.86
85	4.84
86	4.76
87	4.99
88	4.91
89	4.89
90	4.76

Table O.1—PAPR for Preamble modulation series for 2048-FFT mode *(continued)*

Index	PAPR (informative)
91	4.89
92	4.94
93	4.82
94	4.80
95	4.97
96	4.85
97	4.75
98	4.81
99	4.84
100	4.94
101	4.86
102	4.92
103	4.89
104	4.93
105	4.89
106	4.90
107	4.84
108	4.95
109	4.83
110	5.03
111	4.83
112	4.90
113	5.14

Annex 3 Interoperability Test (Mode1 512FFT)

Regarding the interoperability test of the equipment compliant with Mode 1 with 512 FFT of this standard, refer to WiMAX Forum® Test Procedures – WiMAX Forum® Mobile Inter-Operability Test

(URL:http://www.wimaxforum.org/sites/wimaxforum.org/files/technical_document/2010/10/WMF-T25-003-R010v05-IOT.pdf).

Annex 4 Portable BS synchonization (Mode1　512FFT)

In order to reduce interference between different portable BSs operating in the same geographic area, time and frequency synchronization of the OFDMA frame of the involved portable BSs shall be established.

Regarding the time and frequency synchronization of the portable BSs of Mode 1 with 512 FFT size of this standard, refer to "10.1.13 BS-13a.1: BS synchronization" of WiMAX Forum® Test Procedures, WiMAX Forum® Mobile Radio Conformance Tests WMF-T25-002-R010v05 (http://www.wimaxforum.org/sites/wimaxforum.org/files/technical_document/2011/07/WMF-T25-002-R010v05_RCT_.pdf).

Attachment 1 Interoperability Test (Mode1 1024FFT / Mode2)

In the wireless systems specified by this standard, the interoperability should be achieved between the systems with exactly the same specification including frame length, DL/UL ratio, namely between the systems within the same column including the DL/UL ratio in Table1-1.

Regarding the interoperability test of the equipment compliant with Mode 1 with 1024 FFT and Mode2 of this standard, the tests specified below should be conducted. Figure AT1-1 represents the interoperability test configuration between the portable base station and mobile stations developed by different vendors. Each vendor prepares 1 (one) portable base station (BS) and 2 (two) mobile stations (MSs). Each vendor also prepares the function to save and show the test results in order to make a decision to pass or fail each test. Test scenarios are listed in Table AT1-1.

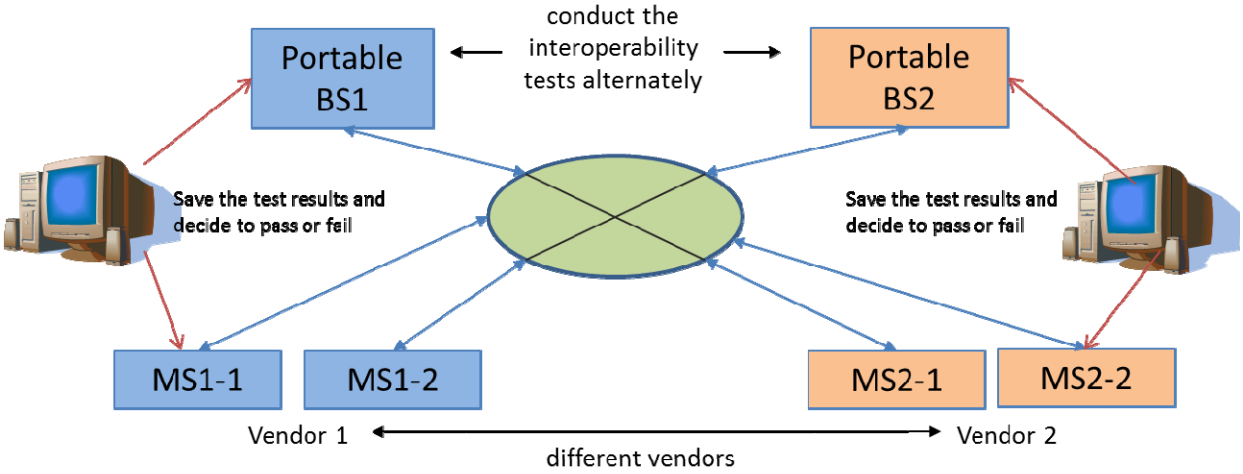

Figure AT1-1: Interoperability Test Configuration

Table AT1-1: Test Scenario List

No. of test scenarios	Test Scenario Name
1	Basic Configuration (8-1 *)
2	Mac-level ARQ (8-4 *)
3	Closed Loop Power Control (8-6 *)
4	Mobile Station initiated Sleep Mode (8-8 *)
5	Point-to-Multipoint Configuration (8-13 *)

* WiMAX Forum® Test Procedures – WiMAX Forum® Mobile Inter-Operability Test (URL:http://www.wimaxforum.org/sites/wimaxforum.org/files/technical_document/2010/10/WMF-T25-003-R010v05-IOT.pdf)

Attachment 2 Coexistence between Systems

In order to show the coexistence conditions between the systems using portable BS and MS, the required distances between the systems are investigated by using a simple usage model and some assumptions. Two cases, Case 1 and Case 2, described below are investigated in this study.

Case 1

Systems between the 200-MHz-band broadband wireless communication systems with exactly the same specifications such as frame length, DL/UL ratio etc.

Case 2

Systems between the 200-MHz band broadband wireless communication systems with different specifications, for example, between the system with 5 msec frame length and the system with 10 msec frame length

AT2-1 Model

Base system is shown in the Figure below.

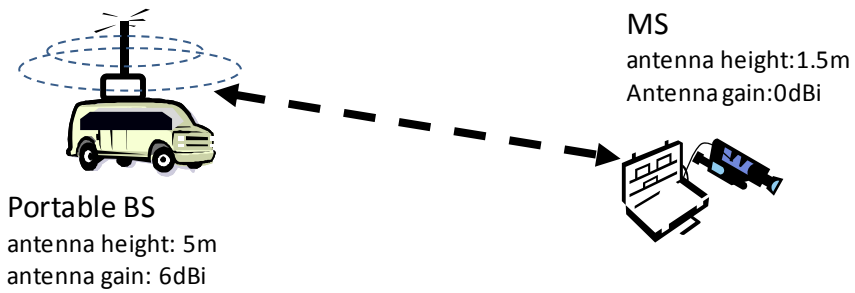

Figure AT2-1: Base model for coexistence investigation

AT2-2 Parameters

The upper limit of adjacent channel leakage power show below is used for the worst case investigation.

-21dBc（in 4.8 MHz band where 2.6-7.4 MHz offset from the center of the relevant channel）

-41dBc（in 4.8 MHz band where 7.6-12.4 MHz offset from the center of the relevant channel）

FigureAT2-2 shows the example of adjacent channel leakage power level. In this case, the channel with the center frequency of 185 MHz is used for the communication. In this channel, output power is 37dBm (5W). The leakage power in the adjacent channel between 177.6 MHz and 182.4 MHz is 16 dBm, 21 dB lower than the output power of 37 dBm.

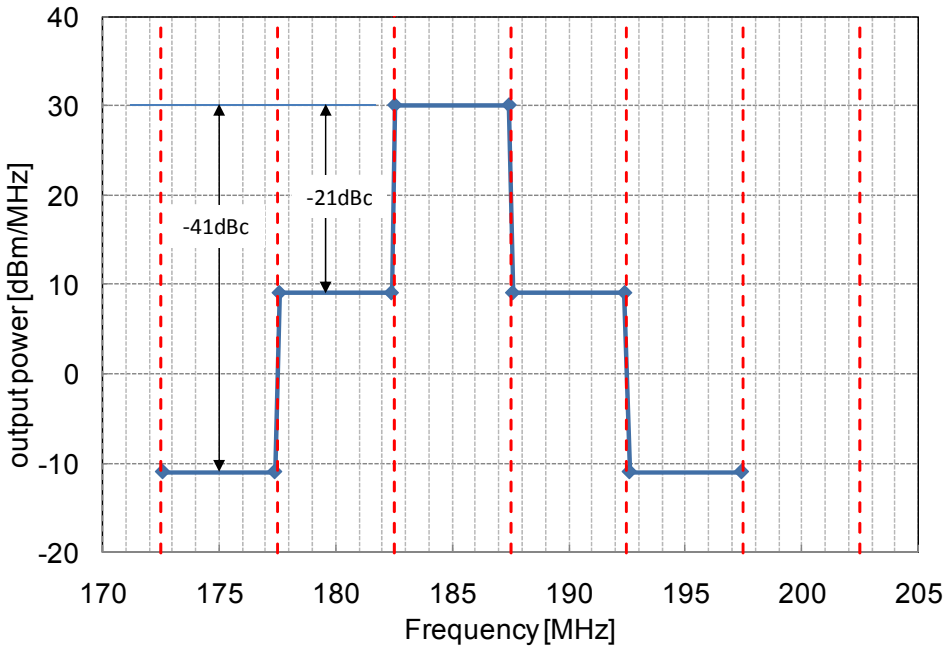

Figure AT2-2: Adjacent channel leakage power level used for this investigation

Permissible interference level is assumed to be 3 dB lower than the environmental noise determined by the Recommendation ITU-R P.372.

AT2-3 Interference Scenarios

In Case 1, two interference scenarios shown below are considered. In this case, interference is from portable BS to MS or from MS to portable BS. The first scenario (Fig.AT2-3(a)) is the interference from portable BS to MS and the second scenario (Fig.AT2-3(b)) is the interference from MS to portable BS. In both sceanrios, three patterns of the channels used by interfering system and interfered system shown by Figure AT2-4.

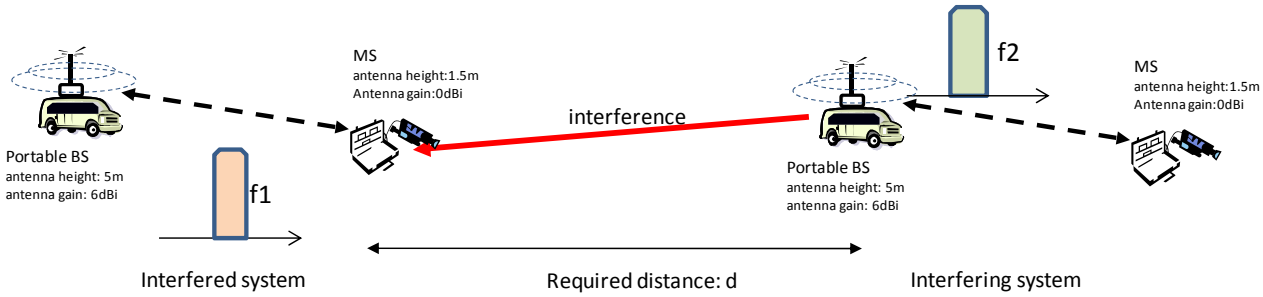

(a) First interference scenario (portable BS to MS) in Case 1

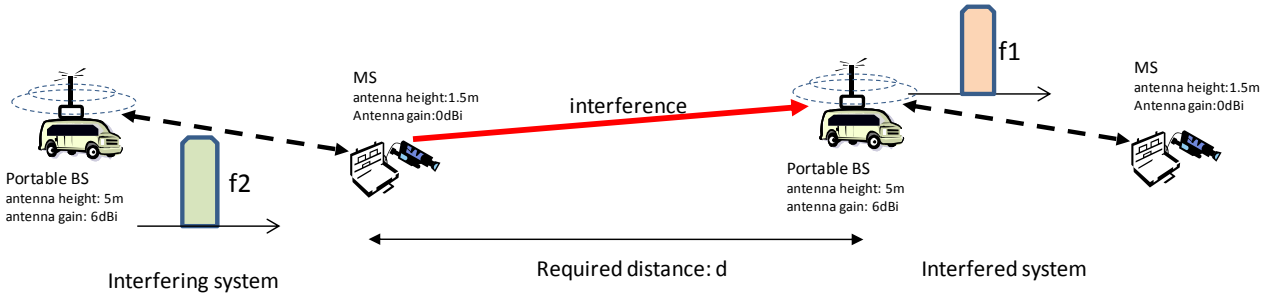

(b)Second interference scenario (MS to portable BS) in Case 1

Figure AT2-3 Interference scenarios in Case 1

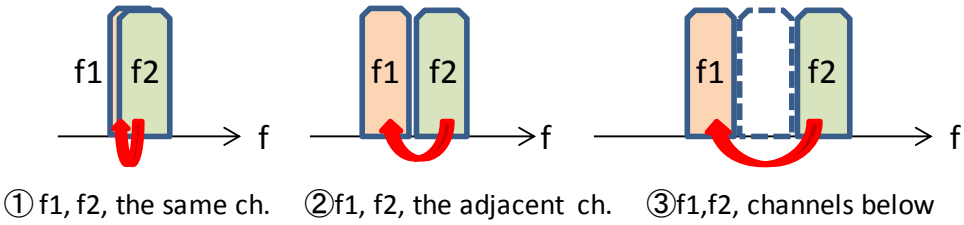

Figure AT2-4: 3 patterns of two channels f1(used by interfered system) and f2(used by interfering system)

In Case 2, on the other hand, interferences occur from both portable BS and MS of the other system. The first scenario (Fig.AT2-5(a)) is the interference from portable BS and MS to portable BS of the interfered system and the second scenario (Fig.AT2-5(b)) is the interference from portable BS and MS to MS of the interfered system. In both scenarios, three patterns of the channels used by interfering system and interfered system shown by Figure AT2-4.

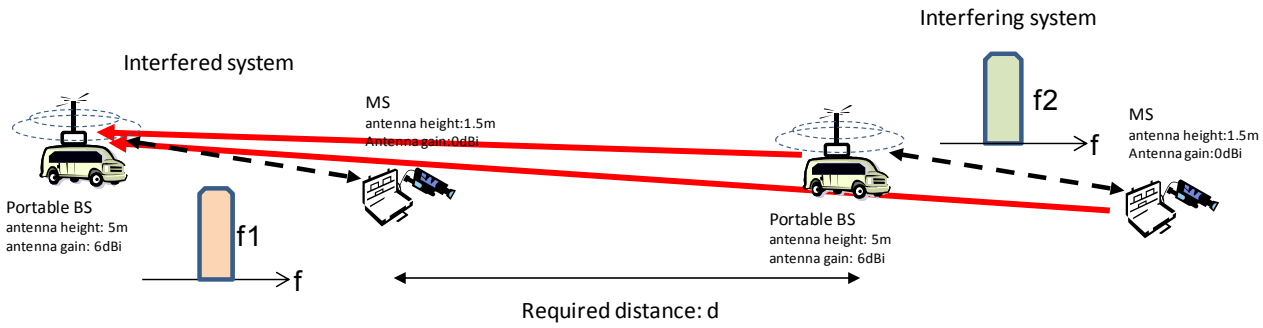

(a) First interference scenario (portable BS and MS to Portable BS) in Case 2

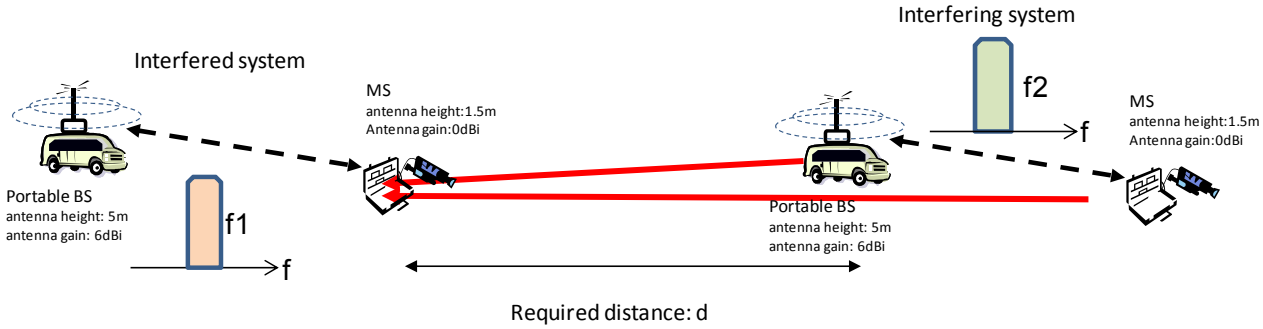

(b)Second interference scenario (Portable BS and MS to MS) in Case 2

Figure AT2-5 Interference scenarios in Case 2

AT2-4 Results

Table AT2-1: Required Distances between Systems*1

	Urban area *2,3			Sub-urban area*2, 3		
	①	②	③	①	②	③
Case(1)-1: portable BS⇒MS	2.8km	0.7Km	0.2km	5.8Km	1.5km	0.4Km
Case(1)-2: MS⇒portable BS	1.9km	0.4Km	0.1km	3.9Km	1.0km	0.2Km
Case (2)-1: portable BS+MS⇒portable BS*4	4.4km	1.2Km	0.3km	9.0Km	2.4km	0.7Km
Case(2)-2: portable BS+MS⇒MS*4	2.9km	0.8Km	0.2km	5.9Km	1.5km	0.5Km

*1: calculated based on the electrical strength

*2: environmental noise is calculated based on ITU-R Rec. P.372-9 curve A for Urban area and curve B for Sub-urban area at 200 MHz

*3: the interfered channel f1 is 185 MHz, the interfering channel f2 is 185 MHz, 180 MHz, or 175 MHz are used for this calculation

*4: In Case (2), it is assumed that MS and potable BS of the interfering system are located at the same point

Attachment 3 Portable BS synchronization (Mode1 1024FFT / Mode2)

In order to reduce interference between different portable BSs operating in the same geographic area, time and frequency synchronization of the OFDMA frame of the involved portable BSs is desired.

Regarding the time and frequency synchronization of the portable BSs of Mode 1 with 1024 FFT size and Mode 2 of this standard, this standard specifications recommends that the start of the preamble symbol of the downlink radio frame should be time aligned with 1 pps timing pulse when measured at the antenna port. This standard recommends an accuracy of ±1 us for alignment with the 1 pps signal. The allowed portable BS clock and RF center frequency error is ±2 ppm. This standard specifications also recommends that the downlink frames transmitted by different BSs operating in the same geographical area should be synchronized to a level of at least 1/8 cyclic prefix length. Portable BS reference clocks should be synchronized to a level that yield RF center frequency offsets of no more than 1% of the OFDMA carrier spacing of the neighbor portable BS. The synchronizing reference should be a 1 pps timing pulse and for example a 10 MHz frequency reference (although a different frequency reference may be used). These signals are typically provided by a GPS receiver.

Change History

Change History List of Ver. 1.1

Page	No.	New	Old	Reason
-	IPRs	List of Essential Industrial Property Rights (selection of option 2) List of IPRs added.	List of Essential Industrial Property Rights (selection of option 2)	Addition
51	Chapter 6 Measurement Method	The measurement methods for the Transmitter and Receiver should be in accordance with those described in Table No.1-1-(3) of "Ordinance concerning Technical Regulations Conformity Certification etc. of Specified Radio Equipment" (http://www.tele.soumu.go.jp/resource/e/equ/tech/octr.pdf) or other those methods equivalent or more with these methods. For those measurement items not covered in these should be, however, in accordance with generally practiced methods.	6.1 Transmitter, 6.2 Receiver and 6.3 Data transmission speed	Modified

Change History List of Ver. 1.2

Page	No.	New	Old	Reason
AN1-1	Annex1	Annex1 Note: Title of the chapter "Attachment1" is changed into "Annex1".	Attachment1	Modified
AN2-1	Annex2	Annex2 Note: Title of the chapter "Attachment4" is changed into "Annex2".	Attachment4	Modified
-	Annex3 Attachment1	(N/A)	Attachment2 When interoperability tests are required, appropriate tests should be chosen in the test procedures specified in [7] by those who are	Deleted

			concerned.	
AN3-1 AT1-1	Annex3 Attachment1	The interoperability tests are as follows: <u>Annex3</u> The equipment compliant with Mode1 with 512 FFT should be tested by reference "WiMAX Forum® Test Procedures". <u>Attachment1</u> The one compliant with Mode1 with 1024 FFT and Mode2 should be tested by the additive writing.	<u>Attachment2</u> The interoperability tests specified in [7] are chosen.	Modified
AN4-1	Annex4	Portable BS synchronization is added in reference to Mode1 with 512 FFT.	(N/A)	Addition
AT2-1	Attachment2	<u>Attachment2</u> Note: Title of the chapter "Attachment3" is changed into "Attachment2".	<u>Attachment3</u>	Modified
AT3-1	Attachment3	Portable BS synchronization is added in reference to Mode1 with 1024 FFT and Mode2.	(N/A)	Addition

To: Secretariat of Standard Assembly Meeting of the Association of Radio Industries and Businesses
FAX: +81-3-3592-1103 E-mail:std@arib.or.jp
Nittochi Bldg. 11th Floor, 1-4-1 Kasumigaseki, Chiyoda-ku, Tokyo 100-0013, Japan

Communication Note of ARIB Standard-related Proposals, etc.

ARIB Standard Name (No.)	200 MHz-Band Broadband Wireless Communication Systems between Portable BS and MSs (T103)

Sections to be completed by sender

Name:		Date	/ / /
TEL:	FAX:	E-mail:	
Company name Department name			
Page / Section	(Please describe your proposal or present your questions or comments in concrete terms.)		

(Response)		Sections to be completed by secretariat	
		Date of receipt	/ / /
		Ref. No.	—
Classification:		Remarks	

Please send your ARIB Standard-related question in this format.

If you complete this form in English, please provide Japanese translation alongside the English.

200 MHz-Band Broadband Wireless Communication Systems
between Portable BS and MSs

ARIB STANDARD

ARIB STD-T103 Version 1.2

Version 1.0 March 28th 2011
Version 1.1 March 19th 2013
Version 1.2 March 17th 2015

Published by
Association of Radio Industries and Businesses

11F, Nittochi Building,
1-4-1 Kasumigaseki, Chiyoda-ku, Tokyo 100-0013,Japan
TEL 03-5510-8590
FAX 03-3592-1103

Printed in Japan