ARIB STD-T63-23.203 V11.12.0

Policy and charging control architecture

(Release 11)

Refer to “Industrial Property Rights (IPR)” in the preface of ARIB STD-T63 for Related Industrial Property Rights. Refer to “Notice” in the preface of ARIB STD-T63 for Copyrights.

3GPP TS 23.203 V11.12.0 (2013-12)

Technical Specification

3rd Generation Partnership Project;
Technical Specification Group Services and System Aspects;
Policy and charging control architecture
(Release 11)

The present document has been developed within the 3rd Generation Partnership Project (3GPP TM) and may be further elaborated for the purposes of 3GPP.
The present document has not been subject to any approval process by the 3GPP Organizational Partners and shall not be implemented.
This Specification is provided for future development work within 3GPP only. The Organizational Partners accept no liability for any use of this Specification.
Specifications and reports for implementation of the 3GPP TM system should be obtained via the 3GPP Organizational Partners' Publications Offices.

Keywords

LTE, UMTS, GSM, Charging, Performance

3GPP

Postal address

3GPP support office address

650 Route des Lucioles - Sophia Antipolis
Valbonne - FRANCE
Tel.: +33 4 92 94 42 00 Fax: +33 4 93 65 47 16

Internet

http://www.3gpp.org

Copyright Notification

No part may be reproduced except as authorized by written permission.
The copyright and the foregoing restriction extend to reproduction in all media.

© 2013, 3GPP Organizational Partners (ARIB, ATIS, CCSA, ETSI, TTA, TTC).
All rights reserved.

UMTS™ is a Trade Mark of ETSI registered for the benefit of its members
3GPP™ is a Trade Mark of ETSI registered for the benefit of its Members and of the 3GPP Organizational Partners
LTE™ is a Trade Mark of ETSI registered for the benefit of its Members and of the 3GPP Organizational Partners
GSM® and the GSM logo are registered and owned by the GSM Association

Contents

Foreword 10
Introduction 10
1 Scope 11
2 References 11
3 Definitions, symbols and abbreviations 12
3.1 Definitions 12
3.2 Abbreviations 15
4 High level requirements 15
4.1 General requirements 15
4.2 Charging related requirements 16
4.2.1 General 16
4.2.2 Charging models 16
4.2.2a Charging requirements 17
4.2.3 Examples of Service Data Flow Charging 18
4.3 Policy control requirements 18
4.3.1 General 18
4.3.2 Gating control 18
4.3.3 QoS control 18
4.3.3.1 QoS control at service data flow level 18
4.3.3.2 QoS control at IP-CAN bearer level 19
4.3.3.3 QoS Conflict Handling 19
4.3.4 Subscriber Spending Limits 19
4.4 Usage Monitoring Control 19
4.5 Application Detection and Control 20
5 Architecture model and reference points 21
5.1 Reference architecture 21
5.2 Reference points 23
5.2.1 Rx reference point 23
5.2.2 Gx reference point 24
5.2.3 Reference points to subscriber databases 24
5.2.3.1 Sp reference point 24
5.2.3.2 Ud reference point 24
5.2.4 Gy reference point 25
5.2.5 Gz reference point 25
5.2.6 S9 reference point 25
5.2.7 Gxx reference point 25
5.2.8 Sd reference point 26
5.2.9 Sy reference point 26
6 Functional description 27
6.1 Overall description 27
6.1.0 General 27
6.1.1 Binding mechanism 27
6.1.1.1 General 27
6.1.1.2 Session binding 27
6.1.1.3 PCC rule authorization and QoS rule generation 27
6.1.1.4 Bearer Binding 29
6.1.2 Reporting 30
6.1.3 Credit management 30
6.1.4 Event Triggers 32
6.1.5 Policy Control 35
6.1.6 Service (data flow) Prioritization and Conflict Handling 36
6.1.7 Standardized QoS characteristics 36
6.1.7.1 General 36

6.1.7.2 Standardized QCI characteristics 37
6.1.7.3 Allocation and Retention Priority characteristics 39
6.1.8 Termination Action 40
6.1.9 Handling of packet filters provided to the UE by PCEF/BBERF 40
6.1.10 IMS Emergency Session Support 41
6.1.10.1 Architecture model and Reference points 41
6.1.10.2 PCC Rule Authorization and QoS rule generation 41
6.1.10.3 Functional Entities 41
6.1.10.3.1 PCRF 41
6.1.10.3.2 PCEF 42
6.1.10.3.3 P-CSCF 42
6.1.10.4 PCC Procedures and Flows 42
6.1.11 Multimedia Priority Service Support 42
6.1.11.1 Architecture model and Reference points 42
6.1.11.2 PCC rule authorization and QoS rule generation 42
6.1.11.3 Priority EPS Bearer Service 43
6.1.11.4 Bearer priority for IMS Multimedia Priority Services 43
6.1.12 ADC rule authorization 43
6.1.13 Redirection 43
6.2 Functional entities 44
6.2.1 Policy Control and Charging Rules Function (PCRF) 44
6.2.1.0 General 44
6.2.1.1 Input for PCC decisions 48
6.2.1.2 Subscription information management in the PCRF 50
6.2.1.3 V-PCRF 50
6.2.1.3.1 General 50
6.2.1.3.2 V-PCRF and Home Routed Access 51
6.2.1.3.3 V-PCRF and Visited Access (local breakout) 51
6.2.1.4 H-PCRF 52
6.2.1.4.1 General 52
6.2.1.4.2 H-PCRF and Home Routed Access 52
6.2.1.4.3 H-PCRF and Visited Access (Local Breakout) 53
6.2.1.5 Handling of Multiple BBFs associated with the same IP-CAN session 53
6.2.1.5.1 Handling of two BBFs associated with the same IP-CAN session during handover 53
6.2.1.5.2 Handling of multiple BBFs with IP-CAN session flow mobility 54
6.2.2 Policy and Charging Enforcement Function (PCEF) 54
6.2.2.1 General 54
6.2.2.2 Service data flow detection 57
6.2.2.3 Measurement 60
6.2.2.4 QoS control 61
6.2.2.5 Application Detection 62
6.2.3 Application Function (AF) 62
6.2.4 Subscription Profile Repository (SPR) 63
6.2.5 Online Charging System 63
6.2.6 Offline Charging System (OFCS) 63
6.2.7 Bearer Binding and Event Reporting Function (BBERF) 64
6.2.7.1 General 64
6.2.7.2 Service data flow detection 64
6.2.7.3 QoS Control 64
6.2.8 User Data Repository (UDR) 64
6.2.9 Traffic Detection Function (TDF) 65
6.3 Policy and charging control rule 65
6.3.1 General 65
6.3.2 Policy and charging control rule operations 71
6.4 IP-CAN bearer and IP-CAN session related policy information 73
6.4a TDF session related policy information 74
6.5 Quality of Service Control rule 74
6.5.1 General 74
6.5.2 Quality of Service control rule operations 75
6.6 Usage Monitoring Control specific information 76
6.6.1 General 76
6.6.2 Usage Monitoring Control operations 76

6.7 IP flow mobility Routing rule 77
6.7.1 General 77
6.7.2 Routing rule operations 77
6.8 Application Detection and Control Rule 78
6.8.1 General 78
6.8.2 Application Detection and Control rule operations 80
6.9 Policy decisions based on spending limits 81

7 PCC Procedures and flows 81
7.1 Introduction 81
7.2 IP-CAN Session Establishment 83
7.3 IP-CAN Session Termination 86
7.3.1 UE initiated IP-CAN Session termination 86
7.3.2 GW(PCEF) initiated IP-CAN Session termination 88
7.4 IP-CAN Session Modification 90
7.4.1 IP-CAN Session Modification; GW (PCEF) initiated 90
7.4.2 IP-CAN Session Modification; PCRF initiated 92
7.4.3 Void 95
7.5 Update of the subscription information in the PCRF 96
7.6 PCRF Discovery and Selection 97
7.6.1 General principles 97
7.6.2 Solution Principles 98
7.7 Gateway Control Session Procedures 99
7.7.1 Gateway Control Session Establishment 99
7.7.1.0 General 99
7.7.1.1 Gateway Control Session Establishment during Attach 100
7.7.1.2 Gateway Control Session Establishment during BBERF Relocation 101
7.7.2 Gateway Control Session Termination 103
7.7.2.1 GW(BBERF)-Initiated Gateway Control Session Termination 103
7.7.2.2 PCRF-Initiated Gateway Control Session Termination 104
7.7.3 Gateway Control and QoS Rules Request 104
7.7.3.1 General 104
7.7.3.2 Event reporting for PCEF in visited network and locally terminated Gxx interaction 106
7.7.4 Gateway Control and QoS Rules Provision 107
7.7.5 Void 108
7.8 Change in subscription for MPS priority services 108
7.9 Procedures over Sy reference point 108
7.9.1 Initial Spending Limit Report Request 108
7.9.2 Intermediate Spending Limit Report Request 109
7.9.3 Final Spending Limit Report Request 109
7.9.4 Spending Limit Report 110

Annex A (normative): Access specific aspects (3GPP) 112

A.1 GPRS 112
A.1.0 General 112
A.1.1 High level requirements 112
A.1.1.1 General 112
A.1.1.2 Charging related requirements 112
A.1.1.3 Policy control requirements 112
A.1.1.4 QoS control 113
A.1.2 Architecture model and reference points 113
A.1.2.1 Reference points 113
A.1.2.1.1 Gx reference point 113
A.1.2.2 Reference architecture 113
A.1.3 Functional description 113
A.1.3.1 Overall description 113
A.1.3.1.1 Binding mechanism 113
A.1.3.1.1.0 General 113
A.1.3.1.1.1 Bearer binding mechanism allocated to the PCEF 114
A.1.3.1.1.2 Bearer binding mechanism allocated to the PCRF 114
A.1.3.1.2 Reporting 115
A.1.3.1.3 Credit management 115

A.1.3.1.4 Event Triggers 115
A.1.3.1.5 Policy Control 116
A.1.3.2 Functional entities 116
A.1.3.2.1 Policy Control and Charging Rules Function (PCRF) 116
A.1.3.2.1.0 General 116
A.1.3.2.1.1 Input for PCC decisions 116
A.1.3.2.2 Policy and Charging Enforcement Function (PCEF) 117
A.1.3.2.2.1 General 117
A.1.3.2.2.2 Service data flow detection 118
A.1.3.2.2.3 Packet Routeing and Transfer Function 118
A.1.3.2.2.4 Measurement 118
A.1.3.2.3 Application Function (AF) 119
A.1.3.3 Policy and charging control rule 119
A.1.3.3.1 General 119
A.1.3.3.2 Policy and charging control rule operations 119
A.1.3.4 IP-CAN bearer and IP-CAN session related policy information 119
A.1.3.5 APN related policy information 120
A.1.4 PCC Procedures and flows 120
A.1.4.1 Introduction 120
A.1.4.2 IP-CAN Session Establishment 120
A.1.4.3 IP-CAN Session Termination 120
A.1.4.3.1 UE initiated IP-CAN Session termination 120
A.1.4.3.2 GW initiated IP-CAN Session termination 121
A.1.4.4 IP-CAN Session Modification 121
A.1.4.4.1 IP-CAN Session Modification; GW(PCEF) initiated 121
A.1.4.4.2 IP-CAN Session Modification; PCRF initiated 121

A.2 Void 122

A.3 Void 122

A.4 3GPP Accesses (GERAN/UTRAN/E-UTRAN) - GTP-based EPC 122
A.4.0 General 122
A.4.1 High Level Requirements 122
A.4.1.1 Charging related requirements 122
A.4.1.2 QoS control 123
A.4.2 Architectural Model and Reference Points 123
A.4.2.1 Reference architecture 123
A.4.3 Functional Description 123
A.4.3.1 Overall description 123
A.4.3.1.1 Credit management 123
A.4.3.1.2 Event Triggers 124
A.4.3.1.3 Binding mechanism 124
A.4.3.1.4 Policy Control 125
A.4.3.2 Functional Entities 125
A.4.3.2.1 Policy Control and Charging Rules Function (PCRF) 125
A.4.3.2.2 Policy and Charging Enforcement Function (PCEF) 126
A.4.3.2.3 Application Function (AF) 126
A.4.3.3 APN related policy information 126
A.4.3.4 IP-CAN bearer and IP-CAN session related policy information 127
A.4.4 PCC Procedures and Flows 127
A.4.4.1 Introduction 127
A.4.4.2 IP-CAN Session Establishment 127
A.4.4.3 GW(PCEF) initiated IP-CAN Session termination 127
A.4.4.4 IP-CAN Session Modification 127
A.4.4.4.1 IP-CAN Session Modification; GW(PCEF) initiated 127
A.4.4.4.2 IP-CAN Session Modification; PCRF initiated 127

A.5 3GPP Accesses (GERAN/UTRAN/E-UTRAN) - PMIP-based EPC 127
A.5.0 General 127
A.5.1 High Level Requirements 128
A.5.1.0 General 128
A.5.1.1 QoS control 128

A.5.2 Architectural Model and Reference Points 128
A.5.2.1 Reference architecture 128
A.5.3 Functional Description 128
A.5.3.1 Overall Description 128
A.5.3.1.1 Binding mechanism 128
A.5.3.1.2 Credit management 128
A.5.3.1.3 Event triggers 128
A.5.3.2 Functional Entities 129
A.5.3.2.1 Policy Control and Charging Rules Function (PCRF) 129
A.5.3.2.2 Policy and Charging Enforcement Function (PCEF) 129
A.5.3.2.3 Bearer Binding and Event Reporting Function (BBERF) 129
A.5.3.3 Void 129
A.5.3.4 APN related policy information 130
A.5.3.5 IP-CAN bearer and IP-CAN session related policy information 130
A.5.4 PCC Procedures and Flows 130
A.5.4.1 Introduction 130
A.5.4.2 Gateway Control Session Establishment 130
A.5.4.3 Gateway Control and QoS Rules Request 130
A.5.4.4 Gateway Control and QoS Rules Provisioning 131
A.5.4.5 IP-CAN Session Establishment 131
A.5.4.6 IP-CAN Session Modification 131
A.5.4.6.1 IP-CAN Session Modification; GW(PCEF) initiated 131
A.5.4.6.2 IP-CAN Session Modification; PCRF initiated 131
A.5.4.6.3 Void 131

Annex B (informative): Void 132

Annex C (informative): Void 133

Annex D (informative): Access specific aspects (Non-3GPP) 134

D.1 DOCSIS IP-CAN 134
D.1.1 General 134
D.1.1 High level requirements 134
D.1.1.1 General 134
D.1.1.2 Charging related requirements 135
D.1.1.3 Policy control requirements 135
D.1.2 Architecture model and reference points 136
D.1.2.1 Reference points 136
D.1.2.1.1 Rx reference point 136
D.1.2.1.2 Gx reference point 136
D.1.2.1.3 Void 136
D.1.3 Functional description 136
D.1.3.1 Overall description 136
D.1.3.1.1 Binding mechanism 136
D.1.3.2 Functional entities 137
D.1.3.2.1 Policy Control and Charging Rules Function (PCRF) 137
D.1.3.2.1.1 Input for PCC decisions 137
D.1.3.2.2 Policy and Charging Enforcement Function (PCEF) 137
D.1.3.2.3 Application Function (AF) 137
D.1.3.3 Policy and charging control rule 137
D.1.3.3.1 General 137
D.1.3.3.2 Policy and charging control rule operations 137

D.2 WiMAX IP-CAN 138
D.2.1 High level requirements 138
D.2.1.1 General 138
D.2.1.2 Charging related requirements 138
D.2.1.3 Policy control requirements 138
D.2.2 Architecture model and reference points 139
D.2.2.1 Reference points 139
D.2.2.1.1 Rx reference point 139
D.2.2.1.2 Gx reference point 139

D.2.2.1.3 Sp reference point 139
D.2.3 Functional description 139
D.2.3.1 Overall description 139
D.2.3.1.1 Binding mechanism 139
D.2.3.1.2 Credit management 139
D.2.3.1.3 Event triggers 139
D.2.3.2 Functional entities 139
D.2.3.2.1 Policy Control and Charging Rules Function (PCRF) 139
D.2.3.2.2 Policy and Charging Enforcement Function (PCEF) 140
D.2.3.2.3 Application Function (AF) 140
D.2.3.3 Policy and charging control rule 140
D.2.3.3.1 General 140
D.2.3.3.1 Policy and charging control rule operations 140

Annex E (informative): Void 141

Annex F (informative): Void 142

Annex G (informative): PCC rule precedence configuration 143

Annex H (normative): Access specific aspects (EPC-based Non-3GPP) 144

H.1 General 144

H.2 EPC-based cdma2000 HRPD Access 144

H.3 EPC-based Trusted WLAN Access with S2a 144

Annex I (informative): Void 145

Annex J (informative): Standardized QCI characteristics - rationale and principles 146

Annex K (informative): Limited PCC Deployment 147

Annex L (normative): Limited PCC Deployment 147

Annex M (informative): Handling of UE or network responsibility for the resource management of services 148

Annex N (informative): PCC usage for sponsored data connectivity 149

N.1 General 149

N.2 Reporting for sponsored data connectivity 150

Annex P (normative): Fixed Broadband Access Interworking with EPC 151

P.1 Definitions 151

P.2 Abbreviations 151

P.3 High Level Requirements 151

P.4 Architecture model and reference points 152
P.4.1 Reference points 152
P.4.1.1 S9a Reference point 152
P.4.1.2 S15 Reference Point 152
P.4.1.3 Gxx reference point 152
P.4.1.4 S9 reference point 152
P.4.1.5 Gx reference point 152
P.4.2 Reference architecture 153
P.4.2.0 General 153
P.4.2.1 Reference architecture – Non-Roaming 154
P.4.2.2 Reference architecture – Home Routed 155
P.4.2.3 Reference architecture – Visited Access 156

P.4.2.4 Reference architecture - Non-Roaming with non-seamless WLAN offload in Fixed Broadband Access Network; scenario with AF 157
P.4.2.5 Reference architecture - Roaming with non-seamless WLAN offload in Fixed Broadband Access Network: scenario with AF 157
P.4.2.6 Reference architecture - Non-Roaming with non-seamless WLAN offload in Fixed Broadband Access Network: scenario with TDF 158
P.4.2.7 Reference architecture - Roaming with non-seamless WLAN offload in Fixed Broadband Access Network: scenario with TDF 159

P.5 Functional description 159
P.5.1 Overall description 159
P.5.1.1 Binding Mechanism 160
P.5.1.1.1 EPC-routed traffic 160
P.5.1.1.2 Non-seamless WLAN offloaded traffic 160
P.5.1.2 S9a, Gx and S15 Session Linking 160

P.6 Functional Entities 161
P.6.1 Policy Control and Charging Rules Function (PCRF) 161
P.6.1.1 General 161
P.6.1.2 V-PCRF 161
P.6.1.3 H-PCRF 162
P.6.2 Broadband Policy Control Function (BPCF) 163
P.6.3 Bearer Binding and Event Reporting Function (BBERF) 163
P.6.4 Policy and Charging Enforcement Function (PCEF) 163

P.7 PCC Procedures and Flows 163
P.7.1 Introduction 163
P.7.2 IP-CAN Session Establishment 164
P.7.2.0 General 164
P.7.2.1 IP-CAN Session Establishment 164
P.7.2.2 Void 166
P.7.3 IP-CAN Session Termination 166
P.7.3.1 Void 166
P.7.3.2 IP-CAN Session Termination 166
P.7.4 IP-CAN Session Modification 167
P.7.4.1 PCEF-Initiated IP-CAN Session Modification 168
P.7.4.2 PCRF-Initiated IP-CAN Session Modification 168
P.7.4.3 BPCF-Initiated IP-CAN Session Modification 170
P.7.5 Gateway Control Session Procedures 171
P.7.5.1 BBERF-Initiated Gateway Control Session Establishment 171
P.7.5.2 GW(BBERF)-Initiated Gateway Control Session Termination 172
P.7.5.3 Gateway Control and QoS Rule Request from ePDG/Serving GW 173
P.7.5.4 PCRF-Initiated Gateway Control Session Termination 174
P.7.6 PCRF Discovery and Selection 175
P.7.6.1 PCRF Discovery and Selection by BPCF 175
P.7.6.2 PCRF Discovery and Selection by AF/TDF unsolicited application reporting for NS-WLAN offloaded traffic 175
P.7.7 BPCF Discovery and Selection 175
P.7.8 TDF Discovery and Selection for NS-WLAN offloaded traffic 175

P.8 3GPP HNB Procedures – CS Support 176
P.8.1 S9a CS Session Establishment 176
P.8.2 PCRF initiated S9a CS Session Modification 177
P.8.2A BPCF initiated S9a CS Session Modification 178
P.8.3 S9a CS Session Termination 178

Annex Q (informative): Change history 180

Foreword

This Technical Specification has been produced by the 3rd Generation Partnership Project (3GPP).

The contents of the present document are subject to continuing work within the TSG and may change following formal TSG approval. Should the TSG modify the contents of the present document, it will be re-released by the TSG with an identifying change of release date and an increase in version number as follows:

Version x.y.z

where:

x the first digit:

1 presented to TSG for information;

2 presented to TSG for approval;

3 or greater indicates TSG approved document under change control.

y the second digit is incremented for all changes of substance, i.e. technical enhancements, corrections, updates, etc.

z the third digit is incremented when editorial only changes have been incorporated in the document.

Introduction

Policy and Charging Control functionality encompasses two main functions:

- Flow Based Charging, including charging control and online credit control;
- Policy control (e.g. gating control, QoS control, QoS signalling, etc.).

The present document specifies the generic PCC aspects within the body, while the specifics for each type of IP-CAN are specified in Annexes. For one type of IP-CAN the corresponding clause in an Annex shall be understood to be a realization of the TS main body. The Annexes are therefore not stand-alone specifications for an IP-CAN. Annexes may specify additional restrictions to the specification body.

1 Scope

The present document specifies the overall stage 2 level functionality for Policy and Charging Control that encompasses the following high level functions for IP-CANs (e.g. GPRS, I-WLAN, Fixed Broadband, etc.):

- Flow Based Charging, including charging control and online credit control;
- Policy control (e.g. gating control, QoS control, QoS signalling, etc.).

The present document specifies the Policy and Charging Control functionality for Evolved 3GPP Packet Switched domain, including both 3GPP accesses (GERAN/UTRAN/E-UTRAN) and Non-3GPP accesses, according to TS 23.401 [17] and TS 23.402 [18].

The present document specifies functionality for unicast bearers. Broadcast and multicast bearers, such as MBMS contexts for GPRS, are out of scope for the present release of this document.

2 References

The following documents contain provisions which, through reference in this text, constitute provisions of the present document.

- References are either specific (identified by date of publication, edition number, version number, etc.) or non-specific.
- For a specific reference, subsequent revisions do not apply.
- For a non-specific reference, the latest version applies. In the case of a reference to a 3GPP document (including a GSM document), a non-specific reference implicitly refers to the latest version of that document *in the same Release as the present document*.

[1] 3GPP TS 41.101: "Technical Specifications and Technical Reports for a GERAN-based 3GPP system".

[2] Void.

[3] 3GPP TS 32.240: "Telecommunication management; Charging management; Charging architecture and principles".

[4] IETF RFC 4006: "Diameter Credit-Control Application".

[5] 3GPP TS 23.207: "End-to-end Quality of Service (QoS) concept and architecture".

[6] 3GPP TS 23.246: "Multimedia Broadcast/Multicast Service (MBMS); Architecture and functional description".

[7] 3GPP TS 23.125: "Overall high level functionality and architecture impacts of flow based charging; Stage 2".

[8] 3GPP TR 21.905: "Vocabulary for 3GPP Specifications".

[9] 3GPP TS 32.251: "Telecommunication management; Charging management; Packet Switched (PS) domain charging".

[10] 3GPP TS 29.061: "Interworking between the Public Land Mobile Network (PLMN) supporting packet based services and Packet Data Networks (PDN)".

[11] 3GPP TR 33.919: "3G Security; Generic Authentication Architecture (GAA); System description".

[12] 3GPP TS 23.060: "General Packet Radio Service (GPRS); Service description; Stage 2".

[13] 3GPP TS 23.234: "3GPP system to Wireless Local Area Network (WLAN) interworking; System description".

[14] 3GPP TS 23.107: "Quality of Service (QoS) concept and architecture".

[15] "WiMAX End-to-End Network Systems Architecture" (http://www.wimaxforum.org/technology/documents).

[16] 3GPP TS 23.003: "Numbering, addressing and identification".

[17] 3GPP TS 23.401: "General Packet Radio Service (GPRS) enhancements for Evolved Universal Terrestrial Radio Access Network (E-UTRAN) access".

[18] 3GPP TS 23.402: "Architecture Enhancements for non-3GPP accesses".

[19] 3GPP TS 36.300: "Evolved Universal Terrestrial Radio Access (E-UTRA) and Evolved Universal Terrestrial Radio Access Network (E-UTRAN); Overall description; Stage 2".

[20] 3GPP2 X.P0057-0 v0.6.0: "E UTRAN - HRPD Connectivity and Interworking: Core Network Aspects", work in progress.

[21] 3GPP TS 23.167: "IP Multimedia Subsystem (IMS) emergency sessions".

[22] 3GPP TS 29.213: "Policy and Charging Control signalling flows and QoS parameter mapping".

[23] 3GPP TS 23.261: "IP Flow Mobility and seamless WLAN offload; Stage 2".

[24] 3GPP TS 23.198: "Open Service Access (OSA); Stage 2".

[25] 3GPP TS 23.335: "User Data Convergence (UDC); Technical realization and information flows; Stage 2".

[26] 3GPP TS 29.335: "User Data Convergence (UDC); User Data Repository Access Protocol over the Ud interface; Stage 3".

[27] 3GPP TS 22.115: "Service aspects; Charging and billing".

[28] 3GPP TS 23.216: "Single Radio Voice Call Continuity (SRVCC); Stage 2".

[29] 3GPP TS 23.139:"3GPP-Fixed Broadband Access Interworking"

[30] Broadband Forum WT-203: "Interworking between Next Generation Fixed and 3GPP Wireless Access" (work in progress).

[31] Broadband Forum WT-134: "Policy Control Framework " (work in progress).

[32] 3GPP TS 25.467: "UTRAN architecture for 3G Home Node B (HNB); Stage 2".

[33] Broadband Forum WT-291: "Nodal Requirements for Interworking between Next Generation Fixed and 3GPP Wireless Access" (work in progress).

3 Definitions, symbols and abbreviations

3.1 Definitions

For the purposes of the present document, the terms and definitions given in TR 21.905 [8] and the following apply. A term defined in the present document takes precedence over the definition of the same term, if any, in TR 21.905 [8].

application detection filter: A logic used to detect packets generated by an application based on extended inspection of these packets, e.g., header and/or payload information, as well as dynamics of packet flows. The logic is entirely internal to a TDF or a PCEF enhanced with ADC, and is out of scope of this specification.

application identifier: An identifier referring to a specific application detection filter.

application service provider: A business entity responsible for the application that is being / will be used by a UE, which may be either an AF operator or has an association with the AF operator.

ADC decision: A decision consists of references to ADC rules, associated enforcement actions (for dynamic ADC rules) and TDF session attributes and is provided by the PCRF to the TDF for application detection and control.

ADC rule: A set of information enabling the detection of application traffic and associated enforcement actions. ADC rules are directly provisioned into the TDF and referenced by the PCRF.

authorised QoS: The maximum QoS that is authorised for a service data flow. In case of an aggregation of multiple service data flows within one IP-CAN bearer (e.g. for GPRS a PDP context), the combination of the "Authorised QoS" information of the individual service data flows is the "Authorised QoS" for the IP-CAN bearer. It contains the QoS class identifier and the data rate.

binding: The association between a service data flow and the IP-CAN bearer (for GPRS the PDP context) transporting that service data flow.

binding mechanism: The method for creating, modifying and deleting bindings.

charging control: The process of associating packets, belonging to a service data flow, to a charging key and applying online charging and/or offline charging, as appropriate.

detected application traffic: An aggregate set of packet flows that are generated by a given application and detected by an application detection filter.

charging key: information used by the online and offline charging system for rating purposes.

dynamic ADC Rule: an ADC rule, for which the PCRF can provide and modify some parameters via the Sd reference point.

dynamic PCC Rule: a PCC rule, for which the definition is provided to the PCEF via the Gx reference point.

event report: a notification, possibly containing additional information, of an event which occurs that corresponds with an event trigger. Also, an event report is a report from the PCRF to the AF concerning transmission resources or requesting additional information.

event trigger: a rule specifying the event reporting behaviour of a PCEF or BBERF or TDF. Also, it is a trigger for credit management events.

gating control: The process of blocking or allowing packets, belonging to a service data flow/ detected application's traffic, to pass through to the desired endpoint.

Gateway Control Session: An association between a BBERF and a PCRF (when GTP is not used in the EPC), used for transferring access specific parameters, BBERF events and QoS rules between PCRF and BBERF.

GBR bearer: An IP-CAN bearer with reserved (guaranteed) bitrate resources.

GPRS IP-CAN: This IP-CAN incorporates GPRS over GERAN and UTRAN, see TS 23.060 [12].

IP-CAN bearer: An IP transmission path of defined capacity, delay and bit error rate, etc. See TR 21.905 [8] for the definition of bearer.

IP-CAN session: The association between a UE and an IP network. The association is identified by one IPv4 and/or an IPv6 prefix together with UE identity information, if available, and a PDN represented by a PDN ID (e.g. an APN). An IP-CAN session incorporates one or more IP-CAN bearers. Support for multiple IP-CAN bearers per IP-CAN session is IP-CAN specific. An IP-CAN session exists as long as UE IP addresses/prefix are established and announced to the IP network.

I-WLAN IP-CAN: This IP-CAN incorporates 3GPP IP access of I-WLAN, see TS 23.234 [13].

non-GBR bearer: An IP-CAN bearer with no reserved (guaranteed) bitrate resources.

operator-controlled service: A service for which complete PCC rule information, including service data flow filter information, is available in the PCRF through configuration and/or dynamic interaction with an AF.

packet flow: A specific user data flow from and/or to the UE.

PCC decision: A decision consists of PCC rules and IP-CAN bearer attributes and is provided by the PCRF to the PCEF for policy and charging control and, for a PCEF enhanced with ADC, application detection and control.

PCC rule: A set of information enabling the detection of a service data flow and providing parameters for policy control and/or charging control and, for a PCEF enhanced with ADC, for application detection and control.

PCEF enhanced with ADC: PCEF, enhanced with application detection and control feature.

policy control: The process whereby the PCRF indicates to the PCEF how to control the IP-CAN bearer. Policy control includes QoS control and/or gating control.

predefined PCC Rule: a PCC rule that has been provisioned directly into the PCEF by the operator.

policy counter: A mechanism within the OCS to track spending applicable to a subscriber.

policy counter identifier: A reference to a policy counter in the OCS for a subscriber.

policy counter status: A label whose values are not standardized and that is associated with a policy counter's value relative to the spending limit(s) (the number of possible policy counter status values for a policy counter is one greater than the number of thresholds associated with that policy counter, i.e policy counter status values describe the status around the thresholds). This is used to convey information relating to subscriber spending from OCS to PCRF. Specific labels are configured jointly in OCS and PCRF.

QoS class identifier (QCI): A scalar that is used as a reference to a specific packet forwarding behaviour (e.g. packet loss rate, packet delay budget) to be provided to a SDF. This may be implemented in the access network by the QCI referencing node specific parameters that control packet forwarding treatment (e.g. scheduling weights, admission thresholds, queue management thresholds, link layer protocol configuration, etc.), that have been pre-configured by the operator at a specific node(s) (e.g. eNodeB).

QoS rule: A set of information enabling the detection of a service data flow and defining its associated QoS parameters.

Monitoring key: information used by the PCEF, TDF and PCRF for usage monitoring control purposes as a reference to a given set of service data flows or application (s), that all share a common allowed usage on a per UE and APN basis.

Redirection: Redirect the detected service traffic to an application server (e.g. redirect to a top-up / service provisioning page).

service data flow: An aggregate set of packet flows carried through the PCEF that matches a service data flow template.

service data flow filter: A set of packet flow header parameter values/ranges used to identify one or more of the packet flows constituting a service data flow. The possible service data flow filters are defined in clause 6.2.2.2.

service data flow filter identifier: A scalar that is unique for a specific service data flow (SDF) filter (used on Gx and Gxx) within an IP-CAN session.

service data flow template: The set of service data flow filters in a PCC Rule or an application identifier in a PCC rule referring to an application detection filter, required for defining a service data flow.

service identifier: An identifier for a service. The service identifier provides the most detailed identification, specified for flow based charging, of a service data flow. A concrete instance of a service may be identified if additional AF information is available (further details to be found in clause 6.3.1).

session based service: An end user service requiring application level signalling, which is separated from service rendering.

spending limit: A spending limit is the usage limit of a policy counter (e.g. monetary, volume, duration) that a subscriber is allowed to consume.

spending limit report: a notification, containing the current policy counter status generated from the OCS to the PCRF via the Sy reference point.

subscribed guaranteed bandwidth QoS: The per subscriber, authorized cumulative guaranteed bandwidth QoS which is provided by the SPR/UDR to the PCRF.

subscriber category: is a means to group the subscribers into different classes, e.g. gold user, the silver user and the bronze user.

TDF session: An association between an IP-CAN session and the assigned TDF for the purpose of application detection and control.

uplink bearer binding verification: The network enforcement of terminal compliance with the negotiated uplink traffic mapping to bearers.

3.2 Abbreviations

For the purposes of the present document, the abbreviations given in TR 21.905 [8] and the following apply. An abbreviation defined in the present document takes precedence over the definition of the same abbreviation, if any, in TR 21.905 [8].

ADC	Application Detection and Control
AF	Application Function
BBERF	Bearer Binding and Event Reporting Function
BBF	Bearer Binding Function
CSG	Closed Subscriber Group
CSG ID	Closed Subscriber Group Identity
DRA	Diameter Routing Agent
H-PCEF	A PCEF in the HPLMN
H-PCRF	A PCRF in the HPLMN
HRPD	High Rate Packet Data
HSGW	HRPD Serving Gateway
IP-CAN	IP Connectivity Access Network
MPS	Multimedia Priority Service
OFCS	Offline Charging System
OCS	Online Charging System
PCC	Policy and Charging Control
PCEF	Policy and Charging Enforcement Function
PCRF	Policy and Charging Rules Function
QCI	QoS Class Identifier
vSRVCC	video Single Radio Voice Call Continuity
SPR	Subscription Profile Repository
TDF	Traffic Detection Function
UDC	User Data Convergence
UDR	User Data Repository
V-PCEF	A PCEF in the VPLMN
V-PCRF	A PCRF in the VPLMN

4 High level requirements

4.1 General requirements

It shall be possible for the PCC architecture to base decisions upon subscription information.

It shall be possible to apply policy and charging control to any kind of 3GPP IP-CAN and any non-3GPP accesses connected via EPC complying with TS 23.402 [18]. Applicability of PCC to other IP-CANs is not restricted. However, it shall be possible for the PCC architecture to base decisions upon the type of IP-CAN used (e.g. GPRS, I-WLAN, etc.).

The policy and charging control shall be possible in the roaming and local breakout scenarios defined in TS 23.401 [17] and TS 23.402 [18].

The PCC architecture shall discard packets that don't match any service data flow of the active PCC rules. It shall also be possible for the operator to define PCC rules, with wild-carded service data flow filters, to allow for the passage and charging for packets that do not match any service data flow template of any other active PCC rules.

The PCC architecture shall allow the charging control to be applied on a per service data flow basis, independent of the policy control.

The PCC architecture shall have a binding method that allows the unique association between service data flows and their IP-CAN bearer.

A single service data flow detection shall suffice for the purpose of both policy control and flow based charging.

A PCC rule may be predefined or dynamically provisioned at establishment and during the lifetime of an IP-CAN session. The latter is referred to as a dynamic PCC rule.

The number of real-time PCC interactions shall be minimized although not significantly increasing the overall system reaction time. This requires optimized interfaces between the PCC nodes.

It shall be possible to take a PCC rule into service, and out of service, at a specific time of day, without any PCC interaction at that point in time.

PCC shall be enabled on a per PDN basis (represented by an access point and the configured range of IP addresses) at the PCEF. It shall be possible for the operator to configure the PCC architecture to perform charging control, policy control or both for a PDN access.

PCC shall support roaming users.

The PCC architecture shall allow the resolution of conflicts which would otherwise cause a subscriber's Subscribed Guaranteed Bandwidth QoS to be exceeded.

The PCC architecture shall support topology hiding.

It should be possible to use PCC architecture for handling IMS-based emergency service.

It shall be possible with the PCC architecture, in real-time, to monitor the overall amount of resources that are consumed by a user and to control usage independently from charging mechanisms, the so-called usage monitoring control.

It shall be possible for the PCC architecture to provide application awareness even when there is no explicit service level signalling.

The PCC architecture shall support making policy decisions based on subscriber spending limits.

4.2 Charging related requirements

4.2.1 General

In order to allow for charging control, the information in the PCC rule identifies the service data flow and specifies the parameters for charging control. The PCC rule information may depend on subscription data.

For the purpose of charging correlation between application level (e.g. IMS) and service data flow level, applicable charging identifiers shall be passed along within the PCC architecture, if such identifiers are available.

For the purpose of charging correlation between service data flow level and application level (e.g. IMS) as well as on-line charging support at the application level, applicable charging identifiers and IP-CAN type identifiers shall be passed from the PCRF to the AF, if such identifiers are available.

4.2.2 Charging models

The PCC charging shall support the following charging models:

- Volume based charging;
- Time based charging;
- Volume and time based charging;
- Event based charging;
- No charging.

NOTE 1: The charging model - "No charging" implies that charging control is not applicable.

Shared revenue services shall be supported. In this case settlement for all parties shall be supported, including the third parties that may have been involved providing the services.

NOTE 2: When developing a charging solution, the PCC charging models may be combined to form the solution. How to achieve a specific solution is however not within the scope of this TS.

4.2.2a Charging requirements

It shall be possible to apply different rates and charging models when a user is identified to be roaming from when the user is in the home network. Furthermore, it shall be possible to apply different rates and charging models based on the location of a user, beyond the granularity of roaming.

It shall be possible to apply different rates and charging models when a user consuming network services via a CSG cell or a hybrid cell according to the user CSG information. User CSG information includes CSG ID, access mode and CSG membership indication.

It shall be possible to apply a separate rate to a specific service, e.g. allow the user to download a certain volume of data, reserved for the purpose of one service for free, and then continue with a rate causing a charge.

It shall be possible to change the rate based on the time of day.

It shall be possible to enforce per-service usage limits for a service data flow using online charging on a per user basis (may apply to prepaid and post-paid users).

It shall be possible for the online charging system to set and send the thresholds (time and/or volume based) for the amount of remaining credit to the PCEF for monitoring. In case the PCEF detects that any of the time based or volume based credit falls below the threshold, the PCEF shall send a request for credit re-authorization to the OCS with the remaining credit (time and/or volume based).

It shall be possible for the charging system to select the applicable rate based on:

- home/visited IP-CAN;
- User CSG information;
- IP-CAN bearer characteristics (e.g. QoS);
- QoS provided for the service;
- time of day;
- IP-CAN specific parameters according to Annex A.

The charging system maintains the tariff information, determining the rate based on the above input. Thus the rate may change e.g. as a result of IP-CAN session modification to change the bearer characteristics provided for a service data flow.

The charging rate or charging model applicable to a service data flow may change as a result of events in the service (e.g. insertion of a paid advertisement within a user requested media stream).

The charging model applicable to a service data flow may change as a result of events identified by the OCS (e.g. after having spent a certain amount of time and/or volume, the user gets to use some services for free).

The charging rate or charging model applicable to a service data flow may change as a result of having used the service data flow for a certain amount of time and/or volume.

In the case of online charging, it shall be possible to apply an online charging action upon PCEF events (e.g. re-authorization upon QoS change).

It shall be possible to indicate to the PCEF that interactions with the charging systems are not required for a PCC rule, i.e. to perform neither accounting nor credit control for this service data flow, and then no offline charging information is generated.

4.2.3 Examples of Service Data Flow Charging

There are many different services that may be used within a network, including both user-user and user-network services. Service data flows from these services may be identified and charged in many different ways. A number of examples of configuring PCC rules for different service data flows are described below.

EXAMPLE 1: A network server provides an FTP service. The FTP server supports both the active (separate ports for control and data) and passive modes of operation. A PCC rule is configured for the service data flows associated with the FTP server for the user. The PCC rule uses a filter specification for the uplink that identifies packets sent to port 20 or 21 of the IP address of the server, and the origination information is wildcarded. In the downlink direction, the filter specification identifies packets sent from port 20 or 21 of the IP address of the server.

EXAMPLE 2: A network server provides a "web" service. A PCC rule is configured for the service data flows associated with the HTTP server for the user. The PCC rule uses a filter specification for the uplink that identifies packets sent to port 80 of the IP address of the server, and the origination information is wildcarded. In the downlink direction, the filter specification identifies packets sent from port 80 of the IP address of the server.

EXAMPLE 3: The same server provides a WAP service. The server has multiple IP addresses, and the IP address of the WAP server is different from the IP address of the web server. The PCC rule uses the same filter specification as for the web server, but with the IP addresses for the WAP server only.

EXAMPLE 4: An operator offers a zero rating for network provided DNS service. A PCC rule is established setting all DNS traffic to/from the operators DNS servers as offline charged. The data flow filter identifies the DNS port number, and the source/destination address within the subnet range allocated to the operators network nodes.

EXAMPLE 5: An operator has a specific charging rate for user-user VoIP traffic over the IMS. A PCC rule is established for this service data flow. The filter information to identify the specific service data flow for the user-user traffic is provided by the P-CSCF (AF).

EXAMPLE 6: An operator is implementing UICC based authentication mechanisms for HTTP based services utilizing the GAA Framework as defined in TR 33.919 [11] by e.g. using the Authentication Proxy. The Authentication Proxy may appear as an AF and provide information to the PCRF for the purpose of selecting an appropriate PCC Rule.

4.3 Policy control requirements

4.3.1 General

The policy control features comprise gating control and QoS control.

The concept of QoS class identifier and the associated bitrates specify the QoS information for service data flows and bearers on the Gx and Gxx reference points.

4.3.2 Gating control

Gating control shall be applied by the PCEF on a per service data flow basis.

To enable the PCRF gating control decisions, the AF shall report session events (e.g. session termination, modification) to the PCRF. For example, session termination, in gating control, may trigger the blocking of packets or "closing the gate".

4.3.3 QoS control

4.3.3.1 QoS control at service data flow level

It shall be possible to apply QoS control on a per service data flow basis in the PCEF.

QoS control per service data flow allows the PCC architecture to provide the PCEF with the authorized QoS to be enforced for each specific service data flow. Criteria such as the QoS subscription information may be used together with policy rules such as, service-based, subscription-based, or predefined PCRF internal policies to derive the authorized QoS to be enforced for a service data flow.

It shall be possible to apply multiple PCC rules, without application provided information, using different authorised QoS within a single IP-CAN session and within the limits of the Subscribed QoS profile.

4.3.3.2 QoS control at IP-CAN bearer level

It shall be possible for the PCC architecture to support control of QoS reservation procedures (UE-initiated or network-initiated) for IP-CANs that support such procedures for its IP-CAN bearers in the PCEF or the BBERF, if applicable. It shall be possible to determine the QoS to be applied in QoS reservation procedures (QoS control) based on the authorised QoS of the service data flows that are applicable to the IP-CAN bearer and on criteria such as the QoS subscription information, service based policies, and/or predefined PCRF internal policies. Details of QoS reservation procedures are IP-CAN specific and therefore, the control of these procedures is described in Annex A and Annex D.

It shall be possible for the PCC architecture to support control of QoS for the packet traffic of IP-CANs.

The PCC architecture shall be able to provide policy control in the presence of NAT devices. This may be accomplished by providing appropriate address and port information to the PCRF.

The enforcement of the control for QoS reservation procedures for an IP-CAN bearer shall allow for a downgrading or an upgrading of the requested QoS as part of a UE-initiated IP-CAN bearer establishment and modification. The PCC architecture shall be able to provide a mechanism to initiate IP-CAN bearer establishment and modification (for IP-CANs that support such procedures for its bearers) as part of the QoS control.

The IP-CAN shall prevent cyclic QoS upgrade attempts due to failed QoS upgrades.

NOTE: These measures are IP-CAN specific.

The PCC architecture shall be able to handle IP-CAN bearers that require a guaranteed bitrate (GBR bearers) and IP-CAN bearers for which there is no guaranteed bitrate (non-GBR bearers).

4.3.3.3 QoS Conflict Handling

It shall be possible for the PCC architecture to support conflict resolution in the PCRF when the authorized bandwidth associated with multiple PCC rules exceeds the Subscribed Guaranteed bandwidth QoS.

4.3.4 Subscriber Spending Limits

It shall be possible to enforce policies based on subscriber spending limits as per TS 22.115 [27]. The OCS shall maintain policy counter(s) to track spending for a subscription. These policy counters must be available in the OCS prior to their use over the Sy interface.

NOTE 1: The mechanism for provisioning the policy counters in the OCS is out of scope of this document.

NOTE 2: A policy counter in the OCS can represent the spending for one or more services, one or more devices, one or more subscribers, etc. The representation is operator dependent. There is no explicit relationship between Charging-Key and policy counter.

The PCRF shall request information regarding the subscriber's spending from the OCS, to be used as input for dynamic policy decisions for the subscriber, using subscriptions to spending limit reports. The OCS shall make information regarding the subscriber's spending available to the PCRF using spending limit reports.

4.4 Usage Monitoring Control

It shall be possible to apply usage monitoring for the accumulated usage of network resources on a per IP-CAN session and user basis. This capability is required for enforcing dynamic policy decisions based on the total network usage in real-time.

The PCRF that uses usage monitoring for making dynamic policy decisions shall set and send the applicable thresholds to the PCEF or TDF for monitoring. The usage monitoring thresholds shall be based on volume. The PCEF or TDF shall notify the PCRF when a threshold is reached and report the accumulated usage since the last report for usage monitoring.

NOTE: There are reasons other than reaching a threshold that may cause the PCEF/TDF to report accumulated usage to the PCRF as defined in clauses 6.2.2.3 and 6.6.2.

The usage monitoring capability shall be possible for an individual or a group ofservice data flow(s), or for all traffic of an IP-CAN session in the PCEF. It shall be possible to activate usage monitoring both to service data flows associated with predefined PCC rules and dynamic PCC rules, including rules with deferred activation and/or deactivation times while those rules are active.

The usage monitoring capability shall be possible for an individual or a group of detected application(s) traffic or all detected traffic belonging to a specific TDF session. It shall be possible to activate usage monitoring both to predefined ADC rules and to dynamic ADC rules, including rules with deferred activation and/or deactivation times while those rules are active.

4.5 Application Detection and Control

The application detection and control feature comprise the request to detect the specified application traffic, report to the PCRF on the start or stop of application traffic and to apply the specified enforcement actions.

The application detection and control shall be implemented either by the TDF or by the PCEF enhanced with ADC.

Two models may be applied, depending on operator requirements: solicited and unsolicited application reporting.

Solicited application reporting: The PCRF shall instruct the TDF, or the PCEF enhanced with ADC, on which applications to detect and whether to report start or stop event to the PCRF by activating the appropriate ADC rules in the TDF or PCC rules in the PCEF enhanced with ADC. Reporting notifications of start and stop of application detection to the PCRF may be muted, in addition, per specific ADC or PCC rule. The PCRF may, in a dynamic ADC or PCC rule, instruct the TDF or PCEF enhanced with ADC, what enforcement actions to apply to the detected application traffic. The PCRF may activate application detection only if user profile configuration allows this.

Unsolicited application reporting: The TDF is pre-configured on which applications to detect and report. The PCRF may enable enforcement in the PCEF based on the service data flow description provided to PCRF by the TDF. It is assumed that user profile configuration indicating whether application detection and control can be enabled is not required.

The report to the PCRF shall include the same information for solicited and unsolicited application reporting that is whether the report is for start or stop, the detected application identifier and, if deducible, the service data flow descriptions for the detected application traffic.

For the application types, where service data flow descriptions are deducible, the Start and Stop of the application may be indicated multiple times, including the application instance identifier to inform the PCRF about the service data flow descriptions belonging to that application instance. The application instance identifier is dynamically assigned by the TDF or by the PCEF enhanced with ADC in order to allow correlation of application Start and Stop events to the specific service data flow description.

For the solicited application reporting model:

- When the TDF cannot provide to the PCRF the service data flow description for the detected applications, the TDF shall perform charging, gating, redirection and bandwidth limitation for the detected applications, as defined in the ADC rule. The existing PCEF functionality remains unchanged.

NOTE: Redirection may not be possible for all types of detected application traffic (e.g. this may only be performed on specific HTTP based flows).

- When the TDF provides to the PCRF the service data flow description the PCRF may take control over, the actions resulting of application detection by applying the charging and policy enforcement per service data flow as defined in this document, or the TDF may perform charging, gating, redirection and bandwidth limitation as described above.

For the solicited application reporting, it is the PCRF's responsibility to coordinate the PCC rules with ADC rules in order to ensure consistent service delivery.

Usage monitoring as described in clause 4.4 may be activated in conjunction with application detection and control. The usage monitoring functionality is only applicable to the solicited application reporting model.

5 Architecture model and reference points

5.1 Reference architecture

The PCC functionality is comprised by the functions of the Policy and Charging Enforcement Function (PCEF), the Bearer Binding and Event Reporting Function (BBERF), the Policy and Charging Rules Function (PCRF), the Application Function (AF), the Traffic Detection Function (TDF), the Online Charging System (OCS), the Offline Charging System (OFCS) and the Subscription Profile Repository (SPR) or the User Data Repository (UDR). UDR replaces SPR when the UDC architecture as defined in TS 23.335 [25] is applied to store PCC related subscription data. In this deployment scenario Ud interface between PCRF and UDR is used to access subscription data in the UDR.

NOTE 1: When UDC architecture is used, SPR and Sp, whenever mentioned in this document, can be replaced by UDR and Ud.

The PCC architecture extends the architecture of an IP-CAN, where the Policy and Charging Enforcement Function is a functional entity in the Gateway node implementing the IP access to the PDN. The allocation of the Bearer Binding and Event Reporting Function is specific to each IP-CAN type and specified in the corresponding Annex.

The non-3GPP network relation to the PLMN is the same as defined in TS 23.402 [18].

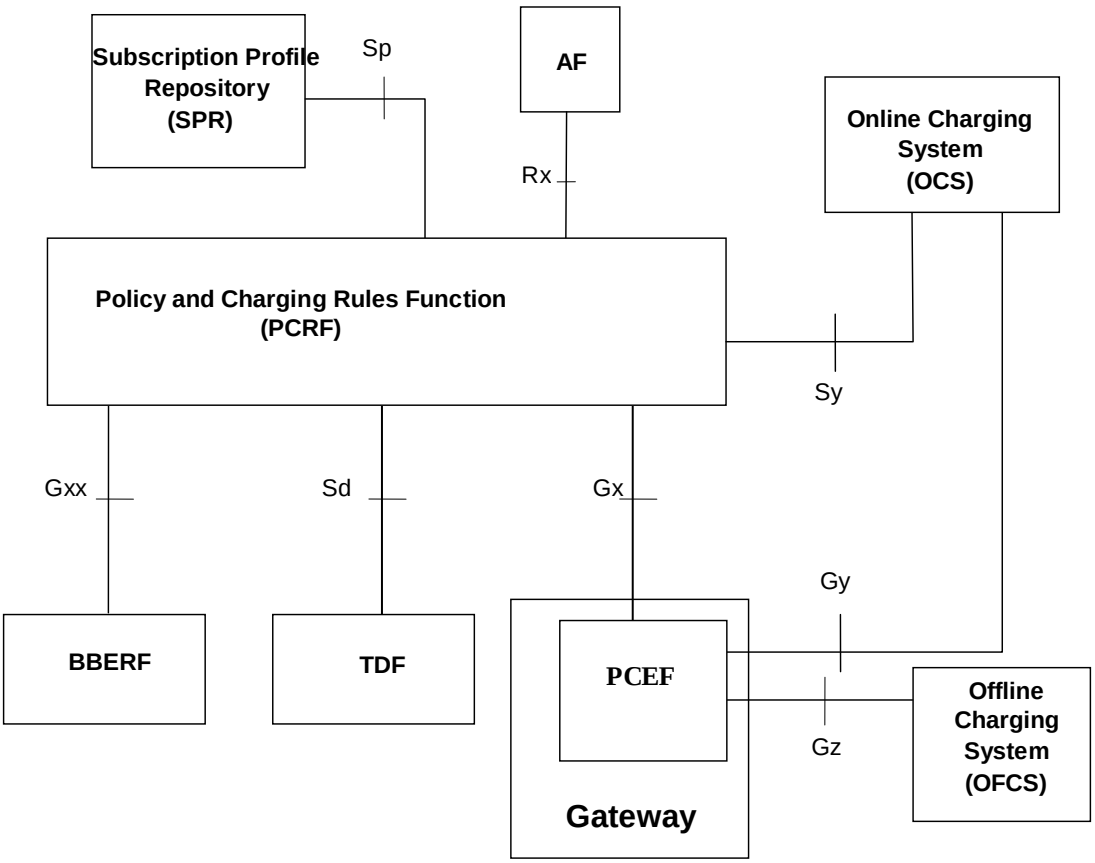

Figure 5.1-1: Overall PCC logical architecture (non-roaming) when SPR is used

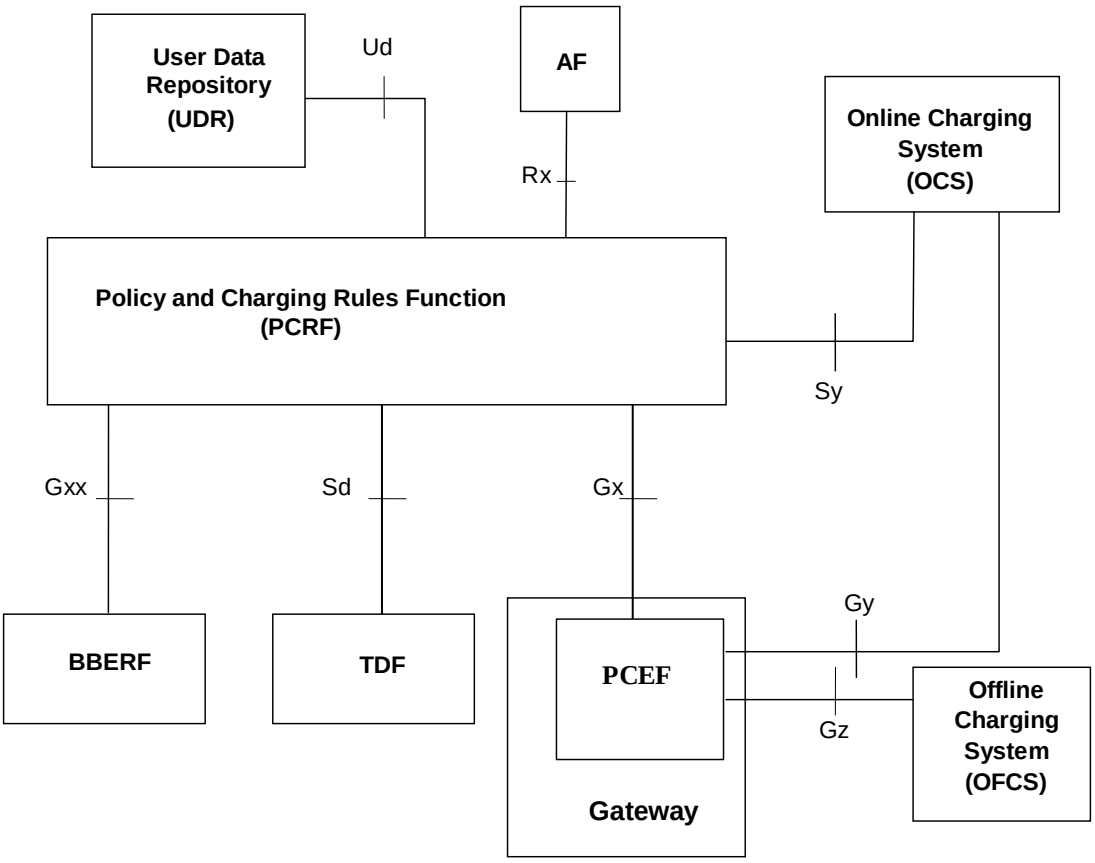

Figure 5.1-2: Overall PCC logical architecture (non-roaming) when UDR is used

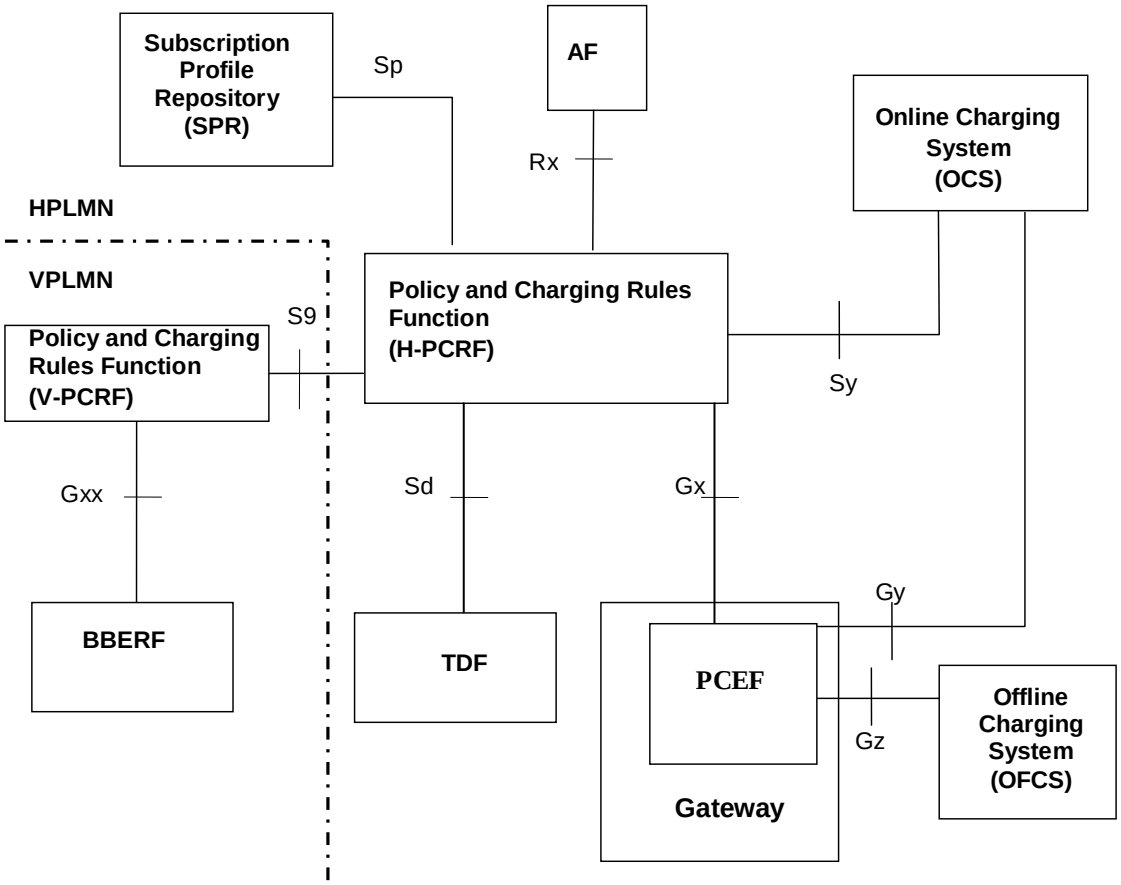

Figure 5.1-3: Overall PCC architecture (roaming with home routed access) when SPR is used

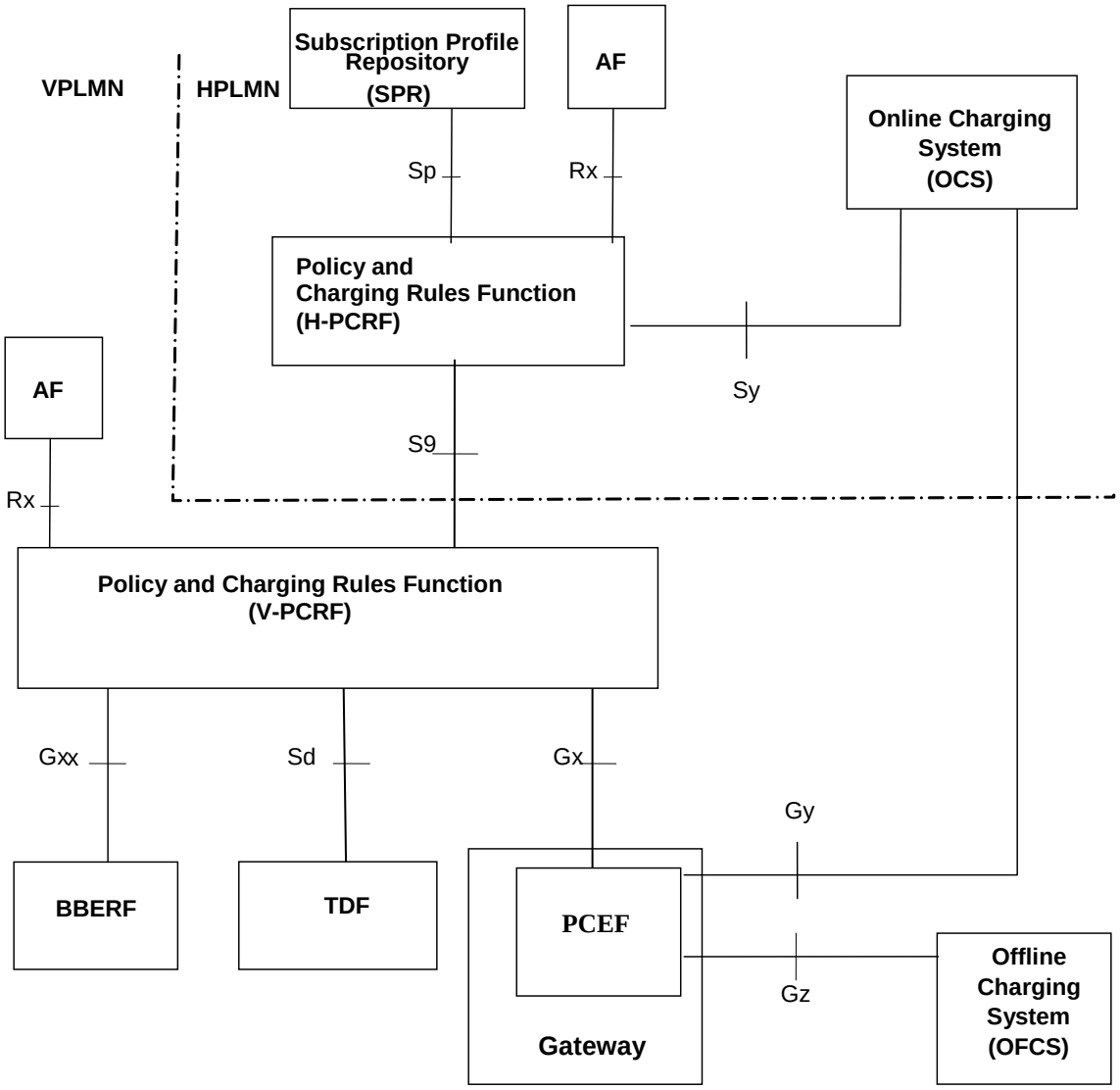

Figure 5.1-4: Overall PCC architecture for roaming with PCEF in visited network (local breakout) when SPR is used

NOTE 2: Similar figures for the roaming cases apply when UDR is used instead of SPR and Ud instead of Sp.

NOTE 3: PCEF may be enhanced with application detection and control feature.

5.2 Reference points

5.2.1 Rx reference point

The Rx reference point resides between the AF and the PCRF.

NOTE: The AF may be a third party application server.

This reference point enables transport of application level session information from AF to PCRF. Such information includes, but is not limited to:

- IP filter information to identify the service data flow for policy control and/or differentiated charging;
- Media/application bandwidth requirements for QoS control.
- In addition, for sponsored data connectivity:
  - the sponsor's identification,

- optionally, a usage threshold and whether the PCRF reports these events to the AF,
- information identifying the application service provider and application (e.g. SDFs, pplicationidentifier, etc.).

The Rx reference point enables the AF subscription to notifications on IP-CAN bearer level events (e.g. signalling path status of AF session) in the IP-CAN.

5.2.2 Gx reference point

The Gx reference point resides between the PCEF and the PCRF.

The Gx reference point enables the PCRF to have dynamic control over the PCC behaviour at a PCEF.

The Gx reference point enables the signalling of PCC decision, which governs the PCC behaviour, and it supports the following functions:

- Establishment of Gx session (corresponding to an IP-CAN session) by the PCEF;
- Request for PCC decision from the PCEF to the PCRF;
- Provision of IP flow mobility routing information from PCEF to PCRF; this applies only when IP flow mobility as defined in TS 23.261 [23] is supported;
- Provision of PCC decision from the PCRF to the PCEF;
- Reporting of the start and the stop of detected applications and transfer of service data flow descriptions and application instance identifiers for detected applications from the PCEF to the PCRF;
- Reporting of the accumulated usage of network resources on a per IP-CAN session basis from the PCEF to the PCRF;
- Delivery of IP-CAN session specific parameters from the PCEF to the PCRF or, if Gxx is deployed, from the PCRF to the PCEF per corresponding request;
- Negotiation of IP-CAN bearer establishment mode (UE-only or UE/NW);
- Termination of Gx session (corresponding to an IP-CAN session) by the PCEF or the PCRF.

NOTE: The PCRF decision to terminate a Gx session is based on operator policies. It should only occur in rare situations (e.g. the removal of a UE subscription) to avoid service interruption due to the termination of the IP-CAN session.

The information contained in a PCC rule is defined in clause 6.3.

5.2.3 Reference points to subscriber databases

5.2.3.1 Sp reference point

The Sp reference point lies between the SPR and the PCRF.

The Sp reference point allows the PCRF to request subscription information related to the IP-CAN transport level policies from the SPR based on a subscriber ID, a PDN identifier and possible further IP-CAN session attributes, see Annex A and Annex D. For example, the subscriber ID can be IMSI. The reference point allows the SPR to notify the PCRF when the subscription information has been changed if the PCRF has requested such notifications. The SPR shall stop sending the updated subscription information when a cancellation notification request has been received from the PCRF.

NOTE: The details associated with the Sp reference point are not specified in this Release.

5.2.3.2 Ud reference point

The Ud reference point resides between the UDR and the PCRF, acting as an Application Frontend as defined in TS 23.335 [25]. It is used by the PCRF to access PCC related subscription data when stored in the UDR.

The details for this reference point are described in TS 23.335 [25] and TS 29.335 [26].

5.2.4 Gy reference point

The Gy reference point resides between the OCS and the PCEF.

The Gy reference point allows online credit control for service data flow based charging. The functionalities required across the Gy reference point are defined in TS 32.251 [9] and is based on RFC 4006 [4].

For a visited access, the VPLMN may use an OCS proxy between the PCEF and the OCS.

5.2.5 Gz reference point

The Gz reference point resides between the PCEF and the OFCS.

The Gz reference point enables transport of service data flow based offline charging information.

The Gz interface is specified in TS 32.240 [3].

5.2.6 S9 reference point

The S9 reference point resides between a PCRF in the HPLMN (H-PCRF) and a PCRF in the VPLMN (V-PCRF).

For roaming with a visited access (PCEF and, if applicable, BBERF in the visited network), the S9 reference point enables the H-PCRF to (via the V-PCRF):

- have dynamic PCC control, including the PCEF and, if applicable, BBERF, and, if applicable, TDF, in the VPLMN;
- deliver or receive IP-CAN-specific parameters from both the PCEF and, if applicable, BBERF, in the VPLMN;
- serve Rx authorizations and event subscriptions from an AF in the VPLMN;
- receive application identifier, service data flow descriptions, if available, application instance identifiers, if available, and application detection start/stop event triggers report.

For roaming with a home routed access, the S9 enables the H-PCRF to provide dynamic QoS control policies from the HPLMN, via a V-PCRF, to a BBERF in the VPLMN.

5.2.7 Gxx reference point

The Gxx reference point resides between the PCRF and the BBERF. This reference point corresponds to the Gxa and Gxc, as defined in TS 23.402 [18] and further detailed in the annexes.

The Gxx reference point enables a PCRF to have dynamic control over the BBERF behaviour.

The Gxx reference point enables the signalling of QoS control decisions and it supports the following functions:

- Establishment of Gxx session by BBERF;

  Termination of Gxx session by BBERF or PCRF;
- Establishment of Gateway Control Session by the BBERF;
- Termination of Gateway Control Session by the BBERF or PCRF;
- Request for QoS decision from BBERF to PCRF;
- Provision of QoS decision from PCRF to BBERF;
- Delivery of IP-CAN-specific parameters from PCRF to BBERF or from BBERF to PCRF;
- Negotiation of IP-CAN bearer establishment mode (UE-only and UE/NW).

A QoS control decision consists of zero or more QoS rule(s) and IP-CAN attributes. The information contained in a QoS rule is defined in clause 6.5.

NOTE: The Gxx session serves as a channel for communication between the BBERF and the PCRF. A Gateway Control Session utilizes the Gxx session and operates as defined in TS 23.402 [18], which includes both the alternatives as defined by cases 2a and 2b in clause 7.1.

5.2.8 Sd reference point

The Sd reference point resides between the PCRF and the TDF.

The Sd reference point enables a PCRF to have dynamic control over the application detection and control behaviour at a TDF.

The Sd reference point enables the signalling of ADC decision, which governs the ADC behaviour, and it supports the following functions:

1. Establishment of TDF session between the PCRF and the TDF;
2. Termination of TDF session between the PCRF and the TDF;
3. Provision of ADC decision from the PCRF for the purpose of application's traffic detection and enforcement at the TDF;
4. Request for ADC decision from the TDF to the PCRF;
5. Reporting of the start and the stop of a detected applications and transfer of service data flow descriptions and application instance identifiers for detected applications from the TDF to the PCRF,
6. Reporting of the accumulated usage of network resources on a per TDF session basis from the TDF to the PCRF;
7. Request and delivery of IP-CAN session specific parameters between the PCRF and the TDF.

   While 1-7 are relevant for solicited application reporting; only 1, 2 and 5 are relevant for unsolicited application reporting.

The information contained in an ADC rule is defined in clause 6.8.

5.2.9 Sy reference point

The Sy reference point resides between the PCRF and the OCS.

The Sy reference point enables transfer of policy counter status information relating to subscriber spending from OCS to PCRF and supports the following functions:

- Request for reporting of policy counter status information from PCRF to OCS and subscribe to or unsubscribe from spending limit reports (i.e. notifications of policy counter status changes).
- Report of policy counter status information upon a PCRF request from OCS to PCRF.
- Notification of spending limit reports from OCS to PCRF.
- Cancellation of spending limit reporting from PCRF to OCS.

Since the Sy reference point resides between the PCRF and OCS in the HPLMN, roaming with home routed or visited access as well as non-roaming scenarios are supported in the same manner.

6 Functional description

6.1 Overall description

6.1.0 General

The PCC architecture works on a service data flow level. The PCC architecture provides the functions for policy and charging control as well as event reporting for service data flows.

6.1.1 Binding mechanism

6.1.1.1 General

The binding mechanism is the procedure that associates a service data flow (defined in a PCC and QoS rule, if applicable, by means of the SDF template), to the IP-CAN bearer deemed to transport the service data flow. For service data flows belonging to AF sessions, the binding mechanism shall also associate the AF session information with the IP-CAN bearer that is selected to carry the service data flow.

NOTE 1: The relation between AF sessions and rules depends only on the operator configuration. An AF session can be covered by one or more PCC and QoS rules, if applicable (e.g. one rule per media component of an IMS session). Alternatively, a rule could comprise multiple AF sessions.

NOTE 2: The PCRF may authorize dynamic PCC rules for service data flows without a corresponding AF session. Such PCC rules may be statically configured at the PCRF or dynamically filled with the UE provided traffic mapping information.

The binding mechanism creates bindings. The algorithm, employed by the binding mechanism, may contain elements specific for the kind of IP-CAN.

The binding mechanism includes three steps:

1. Session binding.

2 PCC rule authorization and QoS rule generation, if applicable.

3. Bearer binding.

6.1.1.2 Session binding

Session binding is the association of the AF session information to one and only one IP-CAN session.

The PCRF shall perform the session binding, which shall take the following IP-CAN parameters into account:

a) The UE IPv4 address and/or IPv6 network prefix;

b) The UE identity (of the same kind), if present.

NOTE 1: In case the UE identity in the IP-CAN and the application level identity for the user are of different kinds, the PCRF needs to maintain, or have access to, the mapping between the identities. Such mapping is not subject to specification within this TS.

c) The information about the packet data network (PDN) the user is accessing, if present.

The PCRF shall identify the PCC rules affected by the AF session information, including new rules to be installed and existing rules to be modified or removed.

6.1.1.3 PCC rule authorization and QoS rule generation

PCC Rule authorization is the selection of the QoS parameters (QCI, ARP, GBR, MBR, etc.) for the PCC rules.

The PCRF shall perform the PCC rule authorization for complete dynamic PCC rules belonging to AF sessions that have been selected in step 1, as described in clause 6.1.1.2, as well as for PCC rules without corresponding AF sessions. Based on AF instructions (as described in clause 6.1.5) dynamic PCC rules can be authorized even if they are not complete (e.g. due to missing service information regarding QoS or traffic filter parameters).

The PCC rule authorization depends on the IP-CAN bearer establishment mode of the IP-CAN session and the mode (UE or NW) of the PCC rule:

- In UE/NW bearer establishment mode, the PCRF shall perform the authorization for all PCC rules that are to be handled in NW mode.

  The PCRF shall include at least one service data flow filter for the uplink direction in PCC rules created in NW mode. If there is no uplink traffic to describe the PCRF shall include an uplink service data flow filter that effectively disallows any useful packet flows in uplink direction (see clause 15.3.3.4 in TS 23.060 [12] for an example of such a packet filter).

NOTE 1: The state of TFT packet filters, as defined in TS 23.060 [12], for an IP-CAN session requires that there is at most one bearer with no TFT packet filter for the uplink direction.

- Otherwise, if PCC rules are to be handled in UE mode or when in UE-only bearer establishment mode, the PCRF shall first identify the PCC rules that correspond to a UE resource request and authorize only these.

  The PCRF shall compare the traffic mapping information of the UE resource request with the service data flow filter information of the services that are allowed for the user. Each part of the traffic mapping information shall be evaluated separately in the order of their related precedence. Any matching service data flow filter leads to an authorization of the corresponding PCC rule for the UE resource request unless the PCC rule is already authorized for a more specific traffic mapping information or the PCC rule cannot be authorized for the QCI that is related to the UE resource request (the details are described in the next paragraph). Since a PCC rule can contain multiple service data flow filters it shall be ensured by the PCRF that a service data flow is only authorized for a single UE resource request.

NOTE 2: For example, a PCC rule containing multiple service data flow filters that match traffic mapping information of different UE resource requests could be segmented by the PCRF according to the different matching traffic mapping information. Afterwards, the PCRF can authorize the different PCC rules individually.

  The PCRF knows whether a PCC rule can be authorized for a single QCI only or a set of QCIs (based on SPR information or local configuration). If the processing of the traffic mapping information would lead to an authorization of a PCC rule, the PCRF shall also check whether the PCC rule can be authorized for the QCI that is related to the UE resource request containing the traffic mapping information. If the PCC rule cannot be authorized for this QCI, the PCRF shall reject the traffic mapping information unless otherwise stated in an access-specific Annex.

  If there is any traffic mapping information not matching to any service data flow filter known to the PCRF and the UE is allowed to request for enhanced QoS for traffic not belonging to operator-controlled services, the PCRF shall authorize this traffic mapping information by adding the respective service data flow filter to a new or existing PCC. If the PCRF received an SDF filter identifier together with this traffic mapping information, the PCRF shall modify the existing PCC rule if the PCC rule is authorized for a GBR QCI.

NOTE 3: If the PCC rule is authorized for a non-GBR QCI, the PCRF may either create a new PCC rule or modify the existing PCC rule.

  If the resulting PCC rule does not include any service data flow filter for the uplink direction, the PCRF shall include an uplink service data flow filter that effectively disallows any useful packet flows in uplink direction (see clause 15.3.3.4 in TS 23.060 [12] for an example of such a packet filter). This filter is considered as created by the network.

NOTE 4: Despite that signalling with the UE in 2G/3G only allows the network to accept or reject the UE request, the PCRF is adding an extra SDF filter in case the PCC rule does not include any needed service data flow filter for the uplink direction, by that the PCRF logic is kept agnostic to the RAT used.

  The PCC rule that needs to be modified can be identified by the service data flow filter the SDF filter identifier refers to. The requested QoS shall be checked against the subscription limitations for traffic not belonging to operator-controlled services.

If the PCRF needs to perform the authorization based on incomplete service information and thus cannot associate a PCC rule with a single IP-CAN bearer, then the PCRF shall generate for the affected service data flow an individual PCC rule per IP-CAN bearer that could carry that service data flow. Once the PCRF receives the complete service information, the PCC rule on the IP-CAN bearer with the matching traffic mapping information shall be updated according to the service information. Any other PCC rule(s) previously generated for the same service data flow shall be removed by the PCRF.

NOTE 5: This is required to enable the successful activation or modification of IP-CAN bearers before knowing the intended use of the IP-CAN bearers to carry the service data flow(s).

For an IP-CAN, where the PCRF gains no information about the uplink IP flows (i.e. the UE provided traffic mapping information contains no information about the uplink IP flows), the binding mechanism shall assume that, for bi-directional service data flows, both downlink and uplink packets travel on the same IP-CAN bearer.

Whenever the service data flow template or the UE provided traffic mapping information change, the existing authorizations shall be re-evaluated, i.e. the authorization procedure specified in this clause, is performed. The re-evaluation may, for a service data flow, require a new authorization for a different UE provided mapping information.

Based on PCRF configuration or AF instructions (as described in clause 6.1.5) dynamic PCC rules may have to be first authorized for the default QCI/default bearer (i.e. bearer without UE provided traffic mapping information) until a corresponding UE resource request occurs.

NOTE 6: This is required to enable services that start before dedicated resources are allocated.

A PCC rule for a service data flow that is a candidate for vSRVCC according to TS 23.216 [28] shall have the PS to CS session continuity indicator set.

For the authorization of a PCC rule the PCRF shall take into account the IP-CAN specific restrictions and other information available to the PCRF. Each PCC rule receives a set of QoS parameters that can be supported by the IP-CAN. The authorization of a PCC rule associated with an emergency service shall be supported without subscription information (e.g. information stored in the SPR). The PCRF shall apply policies configured for the emergency service.

When both a Gx and associated Gxx interface(s) exist for an IP-CAN session, the PCRF shall generate QoS rules for all the authorized PCC rules in this step. The PCRF shall ensure consistency between the QoS rules and PCC rules authorized for the same service data flow when QoS rules are derived from corresponding PCC rules.

When flow mobility applies for the IP-CAN Session, one IP-CAN session may be associated to multiple Gateway Control Sessions with separate BBRFs. In this case, the PCRF shall provision QoS rules only to the appropriate BBERF based on IP flow mobility routing rules received from the PCEF.

6.1.1.4 Bearer Binding

Bearer binding is the association of the PCC rule and the QoS rule (if applicable) to an IP-CAN bearer within that IP-CAN session. This function resides in the Bearer Binding Function (BBF).

The Bearer Binding Function is located either at the BBERF or at the PCEF, depending on the architecture (see clause 5.1). The BBF is located at the PCEF if GTP is used as the mobility protocol towards the PCEF; otherwise, the BBF is located at the BBERF.

The Bearer Binding Function may also be located in the PCRF as specified in Annex A and Annex D (e.g. for GPRS running UE only IP-CAN bearer establishment mode).

NOTE 1: For an IP-CAN, limited to a single IP-CAN bearer per IP-CAN session, the bearer is implicit, so finding the IP-CAN session is sufficient for successful binding.

For an IP-CAN which allows for multiple IP-CAN bearers for each IP-CAN session, the binding mechanism shall use the QoS parameters of the existing IP-CAN bearers to create the bearer binding for a rule, in addition to the PCC rule and the QoS rule (if applicable) authorized in the previous step.

The set of QoS parameters assigned in step 2, as described in clause 6.1.1.3, to the service data flow is the main input for bearer binding. The BBF should not use the same bearer for rules with different settings for the PS to CS session continuity indicator.

The BBF shall evaluate whether it is possible to use one of the existing IP-CAN bearers or not and whether initiate IP-CAN bearer modification if applicable. If none of the existing bearers are possible to use, the BBF should initiate the establishment of a suitable IP-CAN bearer. The binding is created between service data flow(s) and the IP-CAN bearer which have the same QoS class identifier and ARP.

NOTE 2: The handling of a rule with MBR>GBR is up to operator policy (e.g. an independent IP-CAN bearer may be maintained for that SDF to prevent unfairness between competing SDFs).

Requirements, specific for each type of IP-CAN, are defined in the IP-CAN specific Annex.

Whenever the QoS authorization changes, the existing bindings shall be re-evaluated, i.e. the bearer binding procedures specified in this clause, is performed. The re-evaluation may, for a service data flow, require a new binding with another IP-CAN bearer. The BBF should, if the PCRF requests the same change to the ARP/QCI value for all PCC/QoS Rules with the bearer binding to the same bearer, modify the bearer ARP/QCI value as requested.

6.1.2 Reporting

Reporting refers to the differentiated IP-CAN resource usage information (measured at the PCEF) being reported to the online or offline charging functions.

NOTE 1: Reporting usage information to the online charging function is distinct from credit management. Hence multiple PCC rules may share the same charging key for which one credit is assigned whereas reporting may be at higher granularity if serviced identifier level reporting is used.

The PCEF shall report usage information for online and offline charging.

The PCEF shall report usage information for each charging key value. For the case of sponsored data connectivity, the reports for offline charging shall report usage for each charging key, Sponsor Identity and Application Service Provider Identity combination if Sponsor Identity and Application Service Provider Identifier has been provided in the PCC rules.

NOTE 2: Usage reports for online charging that include Sponsor Identity and Application Service Provider Identity is not within scope of the specification in this release. Online charging for sponsored data connectivity can be based on charging key as described in Annex N.

The PCEF shall report usage information for each charging key/service identifier combination if service identifier level reporting is requested in the PCC rule.

NOTE 3: For reporting purposes a) the charging key value identifies a service data flow if the charging key value is unique for that particular service data flow and b) if the service identifier level reporting is present then the service identifier value of the PCC rule together with the charging key identify the service data flow.

For the case where the BBF locates in the PCEF, charging information shall be reported based on the result from the service data flow detection and measurement on a per IP-CAN bearer basis.

For the case where the BBF is not located in the PCEF, charging information shall be reported based on the result from the service data flow detection and measurement, separately per QCI and ARP combination (used by any of the active PCC rules). In case 2a, defined in clause 7.1, charging ID is provided to the BBERF via the PCRF if charging correlation is needed.

A report may contain multiple containers, each container associated with a charging key, charging key and Sponsor Identity (in case of sponsored connectivity) or charging key/service identifier.

6.1.3 Credit management

The credit management applies for online charging only and shall operate on a per charging key basis. The PCEF should initiate one credit management session with the OCS for each IP-CAN Session subject to online charging, unless specified otherwise in an IP-CAN specific annex. Alternatively, the PCEF may initiate one credit management session for each IP-CAN bearer as defined in the applicable annex.

NOTE 1: Independent credit control for an individual service data flow may be achieved by assigning a unique charging key value for the service data flow in the PCC rule.

The PCEF shall request a credit for each charging key occurring in a PCC rule. It shall be up to operator configuration whether the PCEF shall request credit in conjunction with the PCC rule being activated or when the first packet corresponding to the service data flow is detected. The OCS may either grant or deny the request for credit. The OCS shall strictly control the rating decisions.

NOTE 2: The term 'credit' as used here does not imply actual monetary credit, but an abstract measure of resources available to the user. The relationship between this abstract measure, actual money, and actual network resources or data transfer, is controlled by the OCS.

During IP-CAN session establishment and modification, the PCEF shall request credit using the information after policy enforcement (e.g. upgraded or downgraded QoS information), if applicable, even though the PCEF has not signalled it yet in the IP-CAN.

It shall be possible for the OCS to form a credit pool for multiple (one or more) charging keys, applied at the PCEF, e.g. with the objective of avoiding credit fragmentation. Multiple pools of credit shall be allowed per IP-CAN bearer. The OCS shall control the credit pooling decisions. The OCS shall, when credit authorization is sought, either grant a new pool of credit, together with a new credit limit, or give a reference to a pool of credit that is already granted for that IP-CAN bearer. The grouping of charging keys into pools shall not restrict the ability of the OCS to do credit authorisation and provide termination action individually for each charging key of the pool. It shall be possible for the OCS to group service data flows charged at different rates or in different units (e.g. time/volume/event) into the same pool.

For each charging key, the PCEF may receive credit re-authorisation trigger information from the OCS, which shall cause the PCEF to perform a credit re-authorisation when the event occurs. If there are events which can not be monitored in the PCEF, the PCEF shall provide the information about the required event triggers to the PCRF. If information about required event triggers is provided to the PCRF, it is an implementation option whether a successful confirmation is required from the PCRF in order for the PCEF to consider the credit (re-)authorization procedure to be successful. The credit re-authorisation trigger detection shall cause the PCEF to request re-authorisation of the credit in the OCS. It shall be possible for the OCS to instruct the PCEF to seek re-authorisation of credit in case of the events listed in table 6.1.

Table 6.1: Credit re-authorization triggers

Credit re-authorization trigger	Description
Credit authorisation lifetime expiry	The OCS has limited the validity of the credit to expire at a certain time.
Idle timeout	The service data flow has been empty for a certain time.
PLMN change	The UE has moved to another operators' domain.
QoS changes	The QoS of the IP-CAN bearer has changed.
Change in type of IP-CAN	The type of the IP-CAN has changed.
Location change (serving cell)	The serving cell of the UE has changed.
Location change (serving area) (see note 2)	The serving area of the UE has changed.
Location change (serving CN node) (see note 3)	The serving core network node of the UE has changed.
NOTE 1: This list is not exhaustive. Events specific for each IP-CAN are specified in Annex A, and the protocol description may support additional events. NOTE 2: A change in the serving area may also result in a change in the serving cell, and possibly a change in the serving CN node. NOTE 3: A change in the serving CN node may also result in a change in the serving cell, and possibly a change in the serving area.	

If the Location change trigger is armed, the relevant IP-CAN specific procedure shall be implemented to report any changes in location to the level indicated by the trigger. If credit-authorization triggers and event triggers require different levels of reporting of location change for a single UE, the location to be reported should be changed to the highest level of detail required. However, there should be no request being triggered for credit re-authorization to the OCS if the report received is more detailed than requested by the OCS.

Some of the re-authorization triggers are related to IP-CAN bearer modifications. IP-CAN bearer modifications, which do not match any credit re-authorization trigger (received from the OCS for the bearer) shall not cause any credit re-authorization interaction with the OCS.

If the PCRF set the Out of credit event trigger (see clause 6.1.4), the PCEF shall inform the PCRF about the PCC rules for which credit is no longer available together with the applied termination action.

6.1.4 Event Triggers

The Event Reporting Function (ERF) performs event trigger detection. When an event matching the event trigger occurs, the ERF shall report the occurred event to the PCRF. The Event Reporting Function is located either at the PCEF or, at the BBERF (if applicable) or, at the TDF for solicited application reporting (if applicable).

The event triggers define the conditions when the ERF shall interact again with PCRF after an IP-CAN session establishment. The event triggers that are required in procedures shall be unconditionally reported from the ERF, while the PCRF may subscribe to the remaining events. Whether an event trigger requires a subscription by the PCRF is indicated in column 4 in table 6.2 below.

The PCRF subscribes to new event triggers or remove armed event triggers unsolicited at any time or upon receiving a request from the AF, an event report or rule request from the ERF (PCEF or BBERF or TDF) using the Provision of PCC Rules procedure or the Provision of QoS Rules procedure (if applicable) or the Provision of ADC Rules procedure (if applicable). If the provided event triggers are associated with certain parameter values then the ERF shall include those values in the response back to the PCRF. Event triggers are associated with all rules at the ERF of an IP-CAN session (ERF is located at PCEF) or Gateway Control session (ERF is located at BBERF) or with Traffic Detection session (ERF is located in TDF). Event triggers determine when the ERF shall signal to the PCRF that an IP-CAN bearer has been modified. It shall be possible for the ERF to react on the event triggers listed in table 6.2.

Table 6.2: Event triggers

Event trigger	Description	Reported from	Condition for reporting
PLMN change	The UE has moved to another operators' domain.	PCEF	PCRF
QoS change	The QoS of the IP-CAN bearer has changed (note 3).	PCEF, BBERF	PCRF
QoS change exceeding authorization	The QoS of the IP-CAN bearer has changed and exceeds the authorized QoS (note 3).	PCEF	PCRF
Traffic mapping information change	The traffic mapping information of the IP-CAN bearer has changed (note 3).	PCEF	Always set
Resource modification request	A request for resource modification has been received by the BBERF/PCEF (note 6).	PCEF, BBERF	Always set
Routing information change	The IP flow mobility routing information has changed	PCEF	Always set if IP flow mobility is supported
Change in type of IP-CAN (see note 1)	The access type of the IP-CAN bearer has changed.	PCEF	PCRF
Loss/recovery of transmission resources	The IP-CAN transmission resources are no longer usable/again usable.	PCEF, BBERF	PCRF
Location change (serving cell) (see note 10)	The serving cell of the UE has changed.	PCEF, BBERF	PCRF
Location change (serving area) (see notes 4 and 10)	The serving area of the UE has changed.	PCEF, BBERF	PCRF
Location change (serving CN node) (see notes 5 and 10)	The serving core network node of the UE has changed.	PCEF, BBERF	PCRF
Out of credit	Credit is no longer available.	PCEF	PCRF
Enforced PCC rule request	PCEF is performing a PCC rules request as instructed by the PCRF.	PCEF	PCRF
Enforced ADC rule request	TDF is performing an ADC rules request as instructed by the PCRF.	TDF	PCRF
UE IP address change (see note 9)	A UE IP address has been allocated/released	PCEF	Always set
Access Network Charging Correlation Information	Access Network Charging Correlation Information has been assigned.	PCEF	PCRF
Usage report (see note 7)	The IP-CAN session or the Monitoring key specific resources consumed by a UE either reached the threshold or needs to be reported for other reasons.	PCEF, TDF	PCRF
Start of application traffic detection and Stop of application traffic detection (see note 8)	The start or the stop of application traffic has been detected.	PCEF, TDF	PCRF
SRVCC CS to PS handover	A CS to PS handover has been detected	PCEF	PCRF
Access Network Information report	Access information as specified in the Access Network Information Reporting part of a PCC rule.	PCEF, BBERF	PCRF

NOTE 1: This list is not exhaustive. Events specific for each IP-CAN are specified in clause A.
NOTE 2: A change in the type of IP-CAN may also result in a change in the PLMN.
NOTE 3: Available only when the bearer binding mechanism is allocated to the PCRF.
NOTE 4: A change in the serving area may also result in a change in the serving cell, and a change in the serving CN node.
NOTE 5: A change in the serving CN node may also result in a change in the serving cell, and possibly a change in the serving area.
NOTE 6: Available only when the IP-CAN supports corresponding procedures for bearer independent resource requests.
NOTE 7: Usage is defined as volume of user plane traffic.
NOTE 8: The start and stop of application traffic detection are separate event triggers, but received under the same subscription from the PCRF. For unsolicited application reporting, these event triggers are always set for the TDF.
NOTE 9: If TDF for solicited application reporting is applicable, upon receiving this event report from PCEF, PCRF always updates the TDF.
NOTE 10: Due to the potential increase in signalling load, it is recommended that such event trigger subscription is only applied for a limited number of subscribers.

If the Location change trigger is armed, the relevant IP-CAN specific procedure shall be implemented to report any changes in location to the level indicated by the trigger. If credit-authorization triggers and event triggers require different levels of reporting of location change for a single UE, the location to be reported should be changed to the highest level of detail required. However, there should be no request being triggered for PCC rules or QoS rules (if applicable) update to the PCRF if the report received is more detailed than requested by the PCRF.

IP-CAN bearer modifications, which do not match any event trigger, shall cause no interaction with the PCRF.

The QoS change event trigger shall trigger the PCRF interaction for all changes of the IP-CAN bearer QoS. The QoS change exceeding authorization event trigger shall only trigger the PCRF interaction for those changes that exceed the QoS of the IP-CAN bearer that has been authorized by the PCRF previously. The ERF shall check the QoS class identifier and the bandwidth.

The Resource modification request event trigger shall trigger the PCRF interaction for all resource modification requests not tied to a specific IP-CAN bearer received by PCEF/BBERF. The resource modification request received by PCEF/BBERF may include request for guaranteed bit rate changes for a traffic aggregate and/or the association/disassociation of the traffic aggregate with a QCI and/or a modification of the traffic aggregate.

The routing information change event trigger shall trigger the PCRF interaction for any change in how the IP flow is routed (i.e. IP flow mobility routing rules). The routing information change received by the PCEF is specified in TS 23.261 [23].

The enforced PCC rule request event trigger shall trigger a PCEF interaction to request PCC rules from the PCRF for an established IP-CAN session. This PCEF interaction shall take place within the Revalidation time limit set by the PCRF in the IP-CAN session related policy information (clause 6.4).

The enforced ADC rule request event trigger shall trigger a TDF interaction to request ADC rules from the PCRF for an established TDF session for solicited application reporting. This TDF interaction shall take place within the ADC Revalidation time limit set by the PCRF in the TDF session related policy information (clause 6.4).

NOTE 1: The enforced PCC rule request and the enforced ADC rule request mechanisms can be used to avoid signalling overload situations e.g. due to time of day based PCC/ADC rule changes.

The UE IP address change event trigger applies to the PCEF only and shall trigger a PCEF interaction with the PCRF in case a UE IPv4 address is allocated or released during the lifetime of the IP-CAN session.

The Access Network Charging Correlation Information event shall trigger the PCEF to report the assigned access network charging identifier for the PCC rules that are accompanied with a request for this event at activation.

To activate usage monitoring, the PCRF shall set the Usage report event trigger and provide applicable usage thresholds for the Monitoring key(s) that are subject to usage monitoring in the requested node (PCEF or TDF, solicited application reporting). The PCRF shall not remove the Usage report event trigger while usage monitoring is still active in the PCEF/TDF.

If the Usage report event trigger is set and the volume thresholds, earlier provided by the PCRF, are reached, the PCEF or TDF (whichever received the event trigger) shall report this event to the PCRF.

The Start of application traffic detection and Stop of application traffic detection events shall trigger an interaction with PCRF once the requested application traffic is detected (i.e. Start of application traffic detection) or the end of the requested application traffic is detected (i.e. Stop of application traffic detection) unless it is requested within a specific PCC Rule or ADC Rule to mute such a notification for solicited application reporting or unconditionally in case of unsolicited application reporting. The application identifier and service data flow descriptions, if deducible, shall also be included in the report. An application instance identifier shall be included in the report both for Start and for Stop of application traffic detection when service data flow descriptions are deducible. This is done to unambiguously match the Start and the Stop events.

The SRVCC CS to PS handover event trigger shall trigger a PCEF interaction with the PCRF to inform that a CS to PS handover procedure has been detected. The PCRF shall ensure, as specified in TS 23.216 [28], to allow voice media over the default bearer during the course of the CS to PS SRVCC procedure.

At PCC rule activation, modification and deactivation the ERF shall send, as specified in the PCC/QoS rule, the User Location Report and/or UE Timezone Report to the PCRF.

NOTE 2: At PCC rule deactivation the User Location Report includes information on when the UE was last known to be in that location.

The PCRF shall send the User Location Report and/or UE Timezone Report to the AF upon receiving an Access Network Information report corresponding to the AF session from the ERF.

If the event trigger for Access Network Information reporting is set the ERF shall check the need for access network information reporting after successful installation/modification or removal of a PCC/QoS rule or upon termination of the IP-CAN session/bearer, The ERF shall check the Access Network Information report parameters (User Location Report, UE Timezone Report) of the PCC/QoS rules and report the access network information received in the corresponding IP-CAN bearer establishment, modification or termination procedure to the PCRF. The ERF shall not report any subsequent access network information updates received from the IP-CAN without any previous updates of related PCC/QoS rules unless the associated IP-CAN bearer or connection has been released.

If the ERF receives a request to install/modify or remove a PCC/QoS rule with Access Network Information report parameters (User Location Report, UE Timezone Report) set and there is no bearer signalling related to this PCC/QoS rule (i.e. pending IP-CAN bearer signalling initiated by the UE or bearer signalling initiated by the ERF), the ERF shall initiate a bearer signalling to retrieve the current access network information of the UE and forward it to the PCRF afterwards.

If the Access Network Information report parameter for the User Location Report is set and the user location (i.e. cell) is not available to the ERF, the ERF shall provide the serving PLMN identifier to the PCRF which shall forward it to the AF.

6.1.5 Policy Control

Policy control comprises functionalities for:

- Binding, i.e. the generation of an association between a service data flow and the IP-CAN bearer transporting that service data flow;
- Gating control, i.e. the blocking or allowing of packets, belonging to a service data flow or specified by an application identifier, to pass through to the desired endpoint;
- Event reporting, i.e. the notification of and reaction to application events to trigger new behaviour in the user plane as well as the reporting of events related to the resources in the GW(PCEF);
- QoS control, i.e. the authorisation and enforcement of the maximum QoS that is authorised for a service data flow, an Application identified by application identifier or an IP-CAN bearer;
- Redirection, i.e. the steering of packets, belonging to an application defined by the application identifier to the specified redirection address;
- IP-CAN bearer establishment for IP-CANs that support network initiated procedures for IP-CAN bearer establishment.

In case of an aggregation of multiple service data flows (e.g. for GPRS a PDP context), the combination of the authorised QoS information of the individual service data flows is provided as the authorised QoS for this aggregate.

The enforcement of the authorized QoS of the IP-CAN bearer may lead to a downgrading or upgrading of the requested bearer QoS by the GW(PCEF) as part of a UE-initiated IP-CAN bearer establishment or modification. Alternatively, the enforcement of the authorised QoS may, depending on operator policy and network capabilities, lead to network initiated IP-CAN bearer establishment or modification. If the PCRF provides authorized QoS for both, the IP-CAN bearer and PCC rule(s), the enforcement of authorized QoS of the individual PCC rules shall take place first.

QoS authorization information may be dynamically provisioned by the PCRF or, if the conditions mentioned in clause 6.3.1 apply, it can be a predefined PCC rule in the PCEF. In case the PCRF provides PCC rules dynamically, authorised QoS information for the IP-CAN bearer (combined QoS) may be provided. For a predefined PCC rules within the PCEF the authorized QoS information shall take affect when the PCC rule is activated. The PCEF shall combine the different sets of authorized QoS information, i.e. the information received from the PCRF and the information corresponding to the predefined PCC rules. The PCRF shall know the authorized QoS information of the predefined PCC rules and shall take this information into account when activating them. This ensures that the combined authorized QoS of a set of PCC rules that are activated by the PCRF is within the limitations given by the subscription and operator policies regardless of whether these PCC rules are dynamically provided, predefined or both.

For policy control, the AF interacts with the PCRF and the PCRF interacts with the PCEF as instructed by the AF. For certain events related to policy control, the AF shall be able to give instructions to the PCRF to act on its own, i.e. based on the service information currently available. The following events are subject to instructions from the AF:

- The authorization of the service based on incomplete service information;

NOTE 1: The QoS authorization based on incomplete service information is required for e.g. IMS session setup scenarios with available resources on originating side and a need for resource reservation on terminating side.

- The immediate authorization of the service;
- The gate control (i.e. whether there is a common gate handling per AF session or an individual gate handling per AF session component required);
- The forwarding of IP-CAN bearer level information or events:
  - Type of IP-CAN (e.g. GPRS, I-WLAN, etc.);
  - Transmission resource status (established/released/lost);
  - Access Network Charging Correlation Information;
  - Credit denied.

NOTE 2: The credit denied information is only relevant for AFs not performing service charging.

To enable the binding functionality, the UE and the AF shall provide all available flow description information (e.g. source and destination IP address and port numbers and the protocol information). The UE shall use the traffic mapping information to indicate downlink and uplink IP flows.

6.1.6 Service (data flow) Prioritization and Conflict Handling

Service pre-emption priority enables the PCRF to resolve conflicts where the activation of all requested active PCC rules for services would result in a cumulative authorized QoS which exceeds the Subscribed Guaranteed bandwidth QoS.

For example, when supporting network controlled QoS, the PCRF may use the pre-emption priority of a service, the activation of which would cause the subscriber's authorized QoS to be exceeded. If this pre-emption priority is greater than that of any one or more active PCC rules, the PCRF can determine whether the deactivation of any one or more such rules would allow the higher pre-emption priority PCC rule to be activated whilst ensuring the resulting cumulative QoS does not exceed a subscriber's Subscribed Guaranteed Bandwidth QoS.

If such a determination can be made, the PCRF may resolve the conflict by deactivating those selected PCC rules with lower pre-emption priorities and accepting the higher priority service information from the AF. If such a determination cannot be made, the PCRF may reject the service information from the AF.

NOTE: Normative PCRF requirements for conflict handling are not defined. Alternative procedures may use a combination of pre-emption priority and AF provided priority indicator.

6.1.7 Standardized QoS characteristics

6.1.7.1 General

The service level (i.e., per SDF or per SDF aggregate) QoS parameters are QCI, ARP, GBR, and MBR.

Each Service Data Flow (SDF) is associated with one and only one QoS Class Identifier (QCI). For the same IP-CAN session multiple SDFs with the same QCI and ARP can be treated as a single traffic aggregate which is referred to as an SDF aggregate. An SDF is a special case of an SDF aggregate. The QCI is scalar that is used as a reference to node specific parameters that control packet forwarding treatment (e.g. scheduling weights, admission thresholds, queue management thresholds, link layer protocol configuration, etc.) and that have been pre-configured by the operator owning the node (e.g. eNodeB).

6.1.7.2 Standardized QCI characteristics

This clause specifies standardized characteristics associated with standardized QCI values. The characteristics describe the packet forwarding treatment that an SDF aggregate receives edge-to-edge between the UE and the PCEF (see figure 6.1.7-1) in terms of the following performance characteristics:

1 Resource Type (GBR or Non-GBR);

2 Priority;

3 Packet Delay Budget;

4 Packet Error Loss Rate.

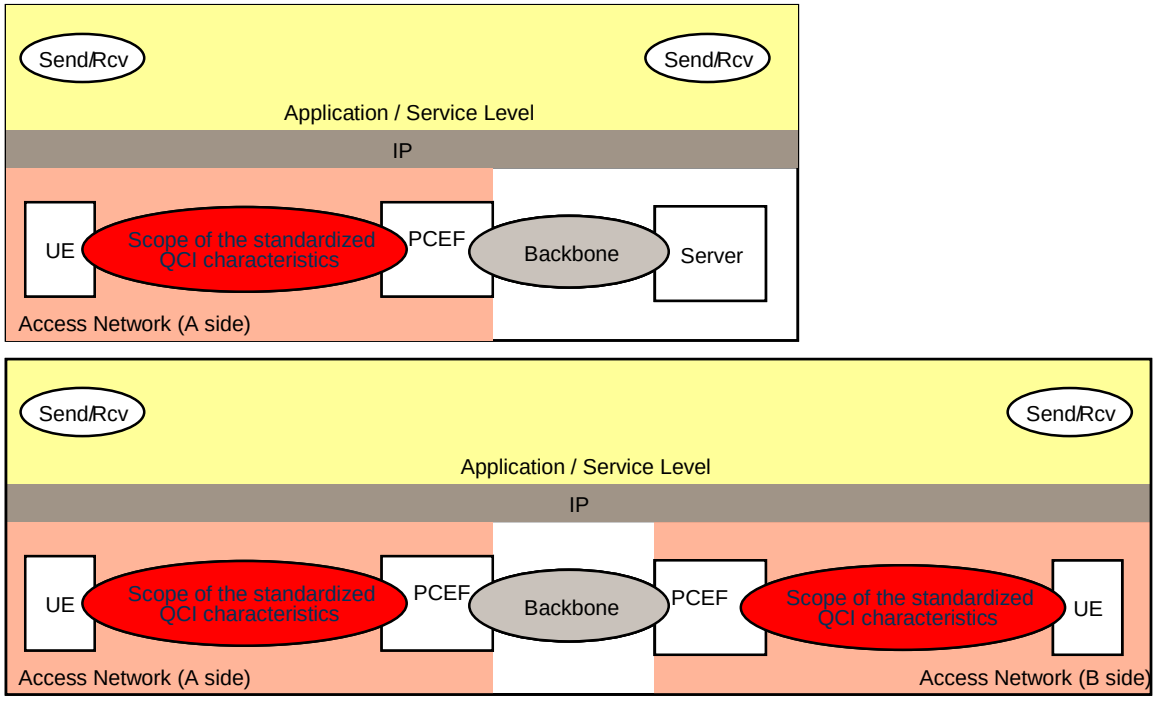

Figure 6.1.7-1: Scope of the Standardized QCI characteristics for client/server (upper figure) and peer/peer (lower figure) communication

The standardized characteristics are not signalled on any interface. They should be understood as guidelines for the pre-configuration of node specific parameters for each QCI. The goal of standardizing a QCI with corresponding characteristics is to ensure that applications / services mapped to that QCI receive the same minimum level of QoS in multi-vendor network deployments and in case of roaming. A standardized QCI and corresponding characteristics is independent of the UE's current access (3GPP or Non-3GPP).

The one-to-one mapping of standardized QCI values to standardized characteristics is captured in table 6.1.7.

Table 6.1.7: Standardized QCI characteristics

QCI	Resource Type	Priority	Packet Delay Budget (NOTE 1)	Packet Error Loss Rate (NOTE 2)	Example Services
1 (NOTE 3)	GBR	2	100 ms	10^{-2}	Conversational Voice
2 (NOTE 3)		4	150 ms	10^{-3}	Conversational Video (Live Streaming)
3 (NOTE 3)		3	50 ms	10^{-3}	Real Time Gaming
4 (NOTE 3)		5	300 ms	10^{-6}	Non-Conversational Video (Buffered Streaming)
5 (NOTE 3)	Non-GBR	1	100 ms	10^{-6}	IMS Signalling
6 (NOTE 4)		6	300 ms	10^{-6}	Video (Buffered Streaming) TCP-based (e.g., www, e-mail, chat, ftp, p2p file sharing, progressive video, etc.)
7 (NOTE 3)		7	100 ms	10^{-3}	Voice, Video (Live Streaming) Interactive Gaming
8 (NOTE 5)		8	300 ms	10^{-6}	Video (Buffered Streaming) TCP-based (e.g., www, e-mail, chat, ftp, p2p file sharing, progressive video, etc.)
9 (NOTE 6)		9			

NOTE 1: A delay of 20 ms for the delay between a PCEF and a radio base station should be subtracted from a given PDB to derive the packet delay budget that applies to the radio interface. This delay is the average between the case where the PCEF is located "close" to the radio base station (roughly 10 ms) and the case where the PCEF is located "far" from the radio base station, e.g. in case of roaming with home routed traffic (the one-way packet delay between Europe and the US west coast is roughly 50 ms). The average takes into account that roaming is a less typical scenario. It is expected that subtracting this average delay of 20 ms from a given PDB will lead to desired end-to-end performance in most typical cases. Also, note that the PDB defines an upper bound. Actual packet delays - in particular for GBR traffic - should typically be lower than the PDB specified for a QCI as long as the UE has sufficient radio channel quality.

NOTE 2: The rate of non congestion related packet losses that may occur between a radio base station and a PCEF should be regarded to be negligible. A PELR value specified for a standardized QCI therefore applies completely to the radio interface between a UE and radio base station.

NOTE 3: This QCI is typically associated with an operator controlled service, i.e., a service where the SDF aggregate's uplink / downlink packet filters are known at the point in time when the SDF aggregate is authorized. In case of E-UTRAN this is the point in time when a corresponding dedicated EPS bearer is established / modified.

NOTE 4: If the network supports Multimedia Priority Services (MPS) then this QCI could be used for the prioritization of non real-time data (i.e. most typically TCP-based services/applications) of MPS subscribers.

NOTE 5: This QCI could be used for a dedicated "premium bearer" (e.g. associated with premium content) for any subscriber / subscriber group. Also in this case, the SDF aggregate's uplink / downlink packet filters are known at the point in time when the SDF aggregate is authorized. Alternatively, this QCI could be used for the default bearer of a UE/PDN for "premium subscribers".

NOTE 6: This QCI is typically used for the default bearer of a UE/PDN for non privileged subscribers. Note that AMBR can be used as a "tool" to provide subscriber differentiation between subscriber groups connected to the same PDN with the same QCI on the default bearer.

The Resource Type determines if dedicated network resources related to a service or bearer level Guaranteed Bit Rate (GBR) value are permanently allocated (e.g. by an admission control function in a radio base station). GBR SDF aggregates are therefore typically authorized "on demand" which requires dynamic policy and charging control. A Non GBR SDF aggregate may be pre-authorized through static policy and charging control.

The Packet Delay Budget (PDB) defines an upper bound for the time that a packet may be delayed between the UE and the PCEF. For a certain QCI the value of the PDB is the same in uplink and downlink. The purpose of the PDB is to support the configuration of scheduling and link layer functions (e.g. the setting of scheduling priority weights and HARQ target operating points). The PDB shall be interpreted as a maximum delay with a confidence level of 98 percent.

NOTE 1: The PDB denotes a "soft upper bound" in the sense that an "expired" packet, e.g. a link layer SDU that has exceeded the PDB, does not need to be discarded (e.g. by RLC in E-UTRAN). The discarding (dropping) of packets is expected to be controlled by a queue management function, e.g. based on pre-configured dropping thresholds.

The support for SRVCC requires QCI=1 only be used for IMS speech sessions in accordance to TS 23.216 [28].

NOTE 2: Triggering SRVCC will cause service interruption and/or inconsistent service experience when using QCI=1 for non-IMS services.

Services using a Non-GBR QCI should be prepared to experience congestion related packet drops, and 98 percent of the packets that have not been dropped due to congestion should not experience a delay exceeding the QCI's PDB. This may for example occur during traffic load peaks or when the UE becomes coverage limited. See Annex J for details. Packets that have not been dropped due to congestion may still be subject to non congestion related packet losses (see PELR below).

Services using a GBR QCI and sending at a rate smaller than or equal to GBR can in general assume that congestion related packet drops will not occur, and 98 percent of the packets shall not experience a delay exceeding the QCI's PDB. Exceptions (e.g. transient link outages) can always occur in a radio access system which may then lead to congestion related packet drops even for services using a GBR QCI and sending at a rate smaller than or equal to GBR. Packets that have not been dropped due to congestion may still be subject to non congestion related packet losses (see PELR below).

Every QCI (GBR and Non-GBR) is associated with a Priority level. Priority level 1 is the highest Priority level. The Priority levels shall be used to differentiate between SDF aggregates of the same UE, and it shall also be used to differentiate between SDF aggregates from different UEs. Via its QCI an SDF aggregate is associated with a Priority level and a PDB. Scheduling between different SDF aggregates shall primarily be based on the PDB. If the target set by the PDB can no longer be met for one or more SDF aggregate(s) across all UEs that have sufficient radio channel quality then Priority shall be used as follows: in this case a scheduler shall meet the PDB of an SDF aggregate on Priority level N in preference to meeting the PDB of SDF aggregates on Priority level N+1 until the priority N SDF aggregate's GBR (in case of a GBR SDF aggregate) has been satisfied. Other aspects related to the treatment of traffic exceeding an SDF aggregate's GBR are out of scope of this specification.

NOTE 3: The definition (or quantification) of "sufficient radio channel quality" is out of the scope of 3GPP specifications.

NOTE 4: In case of E-UTRAN a QCI's Priority level may be used as the basis for assigning the uplink priority per Radio Bearer (see TS 36.300 [19] for details).

The Packet Error Loss Rate (PELR) defines an upper bound for the rate of SDUs (e.g. IP packets) that have been processed by the sender of a link layer protocol (e.g. RLC in E-UTRAN) but that are not successfully delivered by the corresponding receiver to the upper layer (e.g. PDCP in E-UTRAN). Thus, the PELR defines an upper bound for a rate of non congestion related packet losses. The purpose of the PELR is to allow for appropriate link layer protocol configurations (e.g. RLC and HARQ in E-UTRAN). For a certain QCI the value of the PELR is the same in uplink and downlink.

NOTE 5: The characteristics PDB and PELR are specified only based on application / service level requirements, i.e., those characteristics should be regarded as being access agnostic, independent from the roaming scenario (roaming or non-roaming), and independent from operator policies.

6.1.7.3 Allocation and Retention Priority characteristics

The QoS parameter ARP contains information about the priority level, the pre-emption capability and the pre-emption vulnerability. The priority level defines the relative importance of a resource request. This allows deciding whether a bearer establishment or modification request can be accepted or needs to be rejected in case of resource limitations (typically used for admission control of GBR traffic). It can also be used to decide which existing bearers to pre-empt during resource limitations.

The range of the ARP priority level is 1 to 15 with 1 as the highest level of priority. The pre-emption capability information defines whether a service data flow can get resources that were already assigned to another service data flow with a lower priority level. The pre-emption vulnerability information defines whether a service data flow can lose the resources assigned to it in order to admit a service data flow with higher priority level. The pre-emption capability and the pre-emption vulnerability can be either set to 'yes' or 'no'.

The ARP priority levels 1-8 should only be assigned to resources for services that are authorized to receive prioritized treatment within an operator domain (i.e. that are authorized by the serving network). The ARP priority levels 9-15 may be assigned to resources that are authorized by the home network and thus applicable when a UE is roaming.

NOTE: This ensures that future releases may use ARP priority level 1-8 to indicate e.g. emergency and other priority services within an operator domain in a backward compatible manner. This does not prevent the use of ARP priority level 1-8 in roaming situation in case appropriate roaming agreements exist that ensure a compatible use of these priority levels.

6.1.8 Termination Action

The termination action applies only in case of online charging. The termination action indicates the action, which the PCEF should perform when no more credit is granted. A packet that matches a PCC rule, indicating a charging key for which no credit has been granted, is subject to a termination action.

The defined termination actions include:

- Allowing the packets to pass through;
- Dropping the packets;
- The PCEF Default Termination Action;
- The re-direction of packets to an application server (e.g. defined in the termination action).

NOTE: Such a re-direction may cause an application protocol specific asynchronous close event and application protocol specific procedures may be required in the UE and/or AF in order to recover, e.g. as specified in RFC 2616 for HTTP.

The Default Termination Action for all charging keys, for which no more credit is granted and there is no specific termination action shall be pre-configured in the PCEF according to operator's policy. For instance, the default behaviour may consist of allowing packets of any terminated service data flow to pass through the PCEF.

The OCS may provide a termination action for each charging key over the Gy interface. Any previously provided termination action may be overwritten by the OCS. A termination action remains valid and shall be applied by the PCEF until all the corresponding PCC rules of that charging key are removed or the corresponding IP-CAN bearer is removed (for GPRS the PDP context).

The OCS shall provide the termination action to the PCEF before denying credit; otherwise the PCEF default termination action will be performed.

6.1.9 Handling of packet filters provided to the UE by PCEF/BBERF

The network shall ensure that the traffic mapping information negotiated with the UE reflects the bearer binding of PCC/QoS rules, except for those extending the inspection beyond what can be signalled to the UE. The PCC/QoS rules may restrict what traffic is allowed compared to what is explicitly negotiated with the UE. The PCRF may, per service data flow filter, indicate that the PCEF/BBERF is required to explicitly signal the corresponding traffic mapping information to the UE, e.g. for the purpose of IMS precondition handling at the UE. In absence of that indication, it is a PCEF/BBERF decision whether to signal the traffic mapping information that is redundant from a traffic mapping point of view.

NOTE 1: A new/modified PCC/QoS rule can cause that previously redundant, and therefore omitted, traffic mapping information to cease being redundant and causing the PCEF/BBERF to signal the corresponding traffic mapping information to the UE.

NOTE 2: In order to signal a specific traffic mapping to a PDP context/EPS bearer without any previous TFT, if the operator policy is to continue allowing previously allowed traffic on that bearer, TFT filters that correspond to the previous traffic mapping need to be introduced as well.

NOTE 3: The PCEF/BERF can use all SDF filters for the generation of traffic mapping information. However if the number of SDF filters for an IP-CAN bearer exceeds the maximum number of filters that may be signalled to the UE (e.g. as specified in TS 24.008) another bearer needs to be established and a rebinding of PCC rules to bearers (by PCEF/BBERF) or even the splitting of the SDF template into two or more PCC rules (by PCRF) may be required.

The traffic mapping information (e.g. TFT filters for GPRS and EPS) that the network provides to the UE shall include the same content as the corresponding SDF filters in the SDF template received over the Gx/Gxx interface. The representation/format of the packet filters provided by the network to the UE is access-system dependent and may vary between accesses and may also be different from the representation/format of the SDF filters in the SDF template on the Gx/Gxx interface.

NOTE 4: After handover from one access-system to another, if the UE needs to determine the QoS provided in the target access to the pre-existing IP flows in the source access, the UE can perform packet filter comparison between the packet filters negotiated in the old access and those provided by the target access during QoS resource activation.

NOTE 5: If UE initiated procedures are supported and handover between access systems is to be supported, the content of the packet filters provided on the Gx/Gxx interface by the PCRF is restricted to the packet filter fields that all the accesses can provide to the UE.

6.1.10 IMS Emergency Session Support

6.1.10.1 Architecture model and Reference points

Emergency bearer services (i.e. IP-CAN session for the IMS emergency services) are provided by the serving network to support IMS emergency when the network is configured to support emergency services. Emergency services are network services provided through an Emergency APN and may not require a subscription depending on operator policies and local regulatory requirements. For emergency services the architecture for the non-roaming case as described in clause 5.1 is the only applicable architecture model.

For emergency services, the Sp reference point does not apply.

Emergency services are handled locally in the serving network. Therefore the S9 reference point does not apply.

6.1.10.2 PCC Rule Authorization and QoS rule generation

The PCC Rule Authorization and QoS Rule generation function selects QoS parameters that allow prioritization of IMS Emergency sessions. If an IMS Emergency session is prioritized the QoS parameters shall contain an ARP value that is reserved for intra-operator use of IMS Emergency services.

6.1.10.3 Functional Entities

6.1.10.3.1 PCRF

The PCRF shall determine based on the PDN-id if an IP-CAN Session concerns an IMS emergency session.

For an IP-CAN session serving an IMS emergency session, the PCRF makes authorization and policy decisions that restrict the traffic to emergency destinations, IMS signalling and the traffic to retrieve user location information (in the user plane) for emergency services. An IP-CAN session serving an IMS emergency session shall not serve any other service and shall not be converted to/from any IP-CAN session serving other services.

If the UE IP address belongs to an emergency APN, the PCRF does not perform subscription check; instead it utilizes the locally configured operator policies to make authorization and policy decisions.

For IMS, it shall be possible for the PCRF to verify that the IMS service information is associated with a UE IP address belonging to an emergency APN. If the IMS service information does not contain an emergency related indication and the UE IP address is associated with an emergency APN, the PCRF shall reject the IMS service information provided by the P-CSCF (and thus to trigger the release of the associated IMS session), see TS 23.167 [21].

The PCRF performs according to existing procedure:

- If IMS service information containing an emergency related indication is received from the P-CSCF with an UE IP address associated to an Emergency APN, the PCRF initiates an IP-CAN session Modification Request for the IP-CAN session serving the IMS session to the PCEF to provide PCC Rule(s) that authorize media flow(s).

- At reception of an indication that the IMS emergency session is released from the P-CSCF, the PCRF removes the PCC rule(s) for that IMS session with an IP-CAN session Modification Request.

6.1.10.3.2 PCEF

The PCEF initiates the IP-CAN Session termination if the last PCC rule for this IP-CAN session is removed according to existing procedure.

In addition, at reception of an IP-CAN Session Modification Request triggered by the PCRF for an IP-CAN session serving an IMS emergency session that removes all PCC rules with a QCI other than the default bearer QCI and the QCI used for IMS signalling, the PCEF shall start a configurable inactivity timer (e.g., to enable PSAP Callback session). When the configured period of time expires the PCEF shall initiate an IP-CAN Session Termination Request for the IP-CAN session serving the IMS Emergency session.

If a PCRF-Initiated IP-CAN Session Modification Request, providing new PCC rule(s) with a QCI other than the default bearer QCI and the QCI used for IMS signalling, the PCEF shall cancel the inactivity timer.

6.1.10.3.3 P-CSCF

The P-CSCF performs according to existing procedure:

- At reception of an indication that an IMS emergency session is established, the P-CSCF sends IMS service information to the PCRF.
- At reception of an indication that an IMS emergency session is released, the P-CSCF interacts with the PCRF to revoke the IMS service information.

In addition, the P-CSCF shall include an emergency related indication when providing IMS service information to the PCRF; see TS 23.167 [21].

6.1.10.4 PCC Procedures and Flows

At Indication of IP-CAN Session Establishment that includes a PDN-id that identifies an Emergency APN the PCRF ignores subscription information from the SPR. The PCRF uses locally configured operator policies to make authorization and policy decisions.

At Indication of IP-CAN Session Establishment and Gateway Control Session Establishment, the user identity (e.g. IMSI) may not be available, or can not be authenticated. In this case, the IMEI shall be used to identify the UE.

An IP-CAN session for an emergency service shall be restricted to the destination address(es) associated with the emergency service only.

6.1.11 Multimedia Priority Service Support

6.1.11.1 Architecture model and Reference points

Subscription data for MPS is provided to PCC through the Sp reference point. To support MPS service, the PCRF shall subscribe to changes in the MPS subscription data for Priority EPS Bearer Service. Dynamic invocation for MPS is provided from an AF, using the Priority indicator, over Rx.

6.1.11.2 PCC rule authorization and QoS rule generation

For MPS service, the PCRF shall generate the corresponding PCC/QoS rule(s) with the ARP/QCI parameters as appropriate for the prioritized service.

For non-MPS service, the PCRF shall generate the corresponding PCC/QoS rule(s) as per normal procedures, without consideration whether the MPS Priority EPS Bearer Service is active or not, but upgrade the ARP/QCI values suitable for MPS when the Priority EPS Bearer Service is invoked. When the priority EPS Bearer Service is revoked, the PCRF shall change ARP/QCI values modified for Priority EPS bearer service to an appropriate value according to PCRF decision.

6.1.11.3 Priority EPS Bearer Service

The MPS Priority EPS Bearer Service targets the ARP and/or QCI of bearer(s), enabling the prioritization of all traffic on the same bearer.

The PCRF shall, at the activation of the Priority EPS Bearer Service:

- modify ARP/QCI of the default bearer; and
- modify the ARP/QCI of PCC/QoS Rules installed before the activation of the Priority EPS Bearer Service to the ARP/QCI as appropriate for the Priority EPS Bearer Service.

The PCRF shall, at the deactivation of the Priority EPS Bearer Service:

- apply the normal ARP/QCI to the default bearer; and
- for PCC/QoS rules, change ARP/QCI values modified for Priority EPS bearer service to an appropriate value according to PCRF decision.

6.1.11.4 Bearer priority for IMS Multimedia Priority Services

In addition to the mechanism specified in clause 6.1.11.2, IMS Multimedia Priority Services may require upgrade of the dedicated IM CN signalling bearer and the default bearer, e.g. in order to mitigate the IP-CAN session termination due to resource limitation at a location change the default bearer and dedicated IM CN signalling bearer may need an upgraded ARP.

The PCRF shall, at reception of the indication that the IMS Signalling Priority is set for the IP-CAN Session or at reception of service authorization from the P-CSCF (AF) including an MPS session indication and the service priority level:

- assign/upgrade the required ARP to the default bearer; and
- if upgrade of the dedicated IM CN signalling bearer is required, change the ARP in all the PCC/QoS rules that describe the IM CN signalling traffic to the value appropriate for IMS Multimedia Priority Services active.

When the PCRF detects that the P-CSCF (AF) released all the MPS session and the IMS Signalling Priority is not set for the IP-CAN session the PCRF shall:

- apply ARP of the default bearer appropriate with the IMS Multimedia; and
- for PCC/QoS rules, apply an ARP value appropriate with the IMS Multimedia to the PCC/QoS Rule that describe the IM CN signalling traffic.

6.1.12 ADC rule authorization

ADC Rule authorization refers to the PCRF decision about which predefined and/or dynamic ADC rules to activate for a TDF session and is only applicable in case of solicited application reporting.

It may also comprise the selection of parameters (monitoring key, enforcement actions etc.) for dynamic ADC rules to be applied once the traffic is detected.

User profile configuration, received within subscription information, indicating whether application detection and control can be enabled, shall be taken into account by PCRF, when deciding on ADC rule authorization.

NOTE 1: The enforcement actions are only applicable in case of solicited application reporting.

NOTE 2: For unsolicited application reporting, all ADC rules pre-provisioned at TDF are authorized.

6.1.13 Redirection

Redirection of application traffic is an option applicable in the TDF or the PCEF enhanced with ADC.

PCRF may control redirection by provisioning and modifying dynamic ADC rules over the Sd interface for a TDF, or dynamic PCC rules over the Gx interface for a PCEF enhanced with ADC. The PCRF may enable/disable redirection and set a redirect destination for every dynamic ADC rule or PCC rule.

Redirect information (redirection enabled/disabled and redirect destination) within a PCC Rule or within an ADC rule respectively instructs the PCEF enhanced with ADC or the TDF whether or not to perform redirection towards a specific redirect destination. The redirect destination may be provided as part of the dynamic PCC/ADC Rule, or may be preconfigured in the PCEF enhanced with ADC or the TDF. A redirect destination provided in a dynamic PCC/ADC Rule overrides the redirect destination preconfigured in the PCEF enhanced with ADC or in the TDF for this PCC/ADC Rule.

The redirection is enforced by the PCEF enhanced with ADC or the TDF on uplink application's traffic matching the ADC or PCC rule for which redirection is enabled.

6.2 Functional entities

6.2.1 Policy Control and Charging Rules Function (PCRF)

6.2.1.0 General

The PCRF encompasses policy control decision and flow based charging control functionalities.

The PCRF provides network control regarding the service data flow detection, gating, QoS and flow based charging (except credit management) towards the PCEF.

The PCRF shall apply the security procedures, as required by the operator, before accepting service information from the AF.

The PCRF shall decide whether application traffic detection is applicable, as per operator policies, based on user profile configuration, received within subscription information.

The PCRF shall decide how certain service data flow/detected application traffic shall be treated in the PCEF and in the TDF, if applicable, and ensure that the PCEF user plane traffic mapping and treatment is in accordance with the user's subscription profile.

If Gxx applies, the PCRF shall provide QoS rules with identical service data flow templates as provided to the PCEF in the PCC rules. If the service data flow is tunnelled at the BBERF, the PCRF shall provide the BBERF with information received from the PCEF to enable the service data flow detection in the mobility tunnel at the BBERF. In case 2a, defined in clause 7.1, the PCRF may also provide to the BBERF the charging ID information received from the PCEF. If IP flow mobility as specified in TS 23.261 [23] applies, the PCRF shall, based on IP flow mobility routing rules received from the PCEF, provide the authorized QoS rules to the applicable BBERF as specified in clause 6.1.1.3.

The PCRF should for an IP-CAN session derive, from IP-CAN specific restrictions, operator policy and SPR data, the list of permitted QoS class identifiers and associated GBR and MBR limits for the IP-CAN session.

The PCRF may check that the service information provided by the AF is consistent with both the operator defined policy rules and the related subscription information as received from the SPR during IP-CAN session establishment before storing the service information. The service information shall be used to derive the QoS for the service. The PCRF may reject the request received from the AF when the service information is not consistent with either the related subscription information or the operator defined policy rules and as a result the PCRF shall indicate that this service information is not covered by the subscription information or by operator defined policy rules and may indicate, in the response to the AF, the service information that can be accepted by the PCRF (e.g. the acceptable bandwidth). In the absence of other policy control mechanisms outside the scope of PCC, it is recommended that the PCRF include this information in the response.

In this Release, the PCRF supports only a single Rx reference point, i.e. there is one AF for each AF session.

The PCRF authorizes QoS resources. The PCRF uses the service information received from the AF (e.g. SDP information or other available application information) and/or the subscription information received from the SPR to calculate the proper QoS authorization (QoS class identifier, bitrates). The PCRF may also take into account the requested QoS received from the PCEF via Gx interface.

NOTE 1: The PCRF provides always the maximum values for the authorized QoS even if the requested QoS is lower than what can be authorized.

The Authorization of QoS resources shall be based on complete service information unless the PCRF is required to perform the authorization of QoS resources based on incomplete service information. The PCRF shall after receiving the complete service information, update the affected PCC rules accordingly.

The PCRF may use the subscription information as basis for the policy and charging control decisions. The subscription information may apply for both session based and non-session based services.

The PCRF determines whether a Gx session from the PCEF is to be linked with a Gateway Control Session from the BBERF by matching the IPv4 address and/or IPv6 network prefix and conditionally the UE Identity, PDN Connection ID and PDN ID towards open Gateway Control Sessions. When IP flow mobility as specified in TS 23.261 [23] applies, one Gx session may be linked with multiple Gateway Control Sessions.

If the BBERF does not provide any PDN ID at the Gateway Control Session Establishment, then the PCRF maintains Gateway Control Session to Gx session linking to the Gx sessions where the assigned CoA and UE Identity (if available over Gxx) are equal. The PCRF and BBERF shall be capable of separating information for each IP-CAN session within the common Gateway Control Session.

If the BBERF provides a PDN ID at the Gateway Control Session Establishment, then the PCRF maintains Gateway Control Session to Gx session linking where the UE identity and PDN ID are equal. If the BBERF provides a PDN ID at Gateway Control Session establishment, it may also indicate in the Gateway Control Session establishment that the PCRF shall not attempt linking the new Gateway Control Session with an existing Gx session immediately. If the PCRF receives such an indication, it keeps the new Gateway Control Session pending and defers linking until an IP-CAN session establishment or an IP-CAN session modification with matching UE Identity, PDN ID and IP-CAN type arrives via Gx.

If the BBERF provides a PDN ID and a PDN Connection ID at the Gateway Control Session establishment, then the PCRF maintains Gateway Control Session to Gx session linking where the UE identity, PDN Connection ID and PDN ID are equal.

When a BBERF establishes multiple Gateway Control Sessions for the same PDN ID and the IP-CAN type changes, the PCRF assumes that this constitutes inter-system BBERF relocations of existing Gateway Control Sessions. The BBERF may supply UE IPv4 address and/or IPv6 network prefix (if known) that can be used for linking the new Gateway Control Session to the existing Gx session. If the UE IPv4 address and/or IPv6 network prefix is/are not provided in the new Gateway Control Session establishment, the PCRF shall defer the linking with existing Gx session until receiving an IP-CAN Session modification with matching UE Identity, IP-CAN type, PDN Connection ID, and PDN ID.

The PCRF determines which case applies as described on clause 7.1.

If an AF requests the PCRF to report on the signalling path status, for the AF session, the PCRF shall, upon indication of loss of resources from the PCEF, for PCC rules corresponding to the signalling traffic notify the AF on changes to the signalling path status. The PCRF needs to have the knowledge of which PCC rules identify signalling traffic.

Negotiation of IP-CAN bearer establishment mode takes place via Gx for 3GPP IP-CANs. For non-3GPP IP-CANs specified in TS 23.402 [18] negotiation of bearer establishment mode takes place via Gx when GTP is used and via Gxx for the rest of the cases. For other accesses supporting multiple IP-CAN bearer establishment modes, if Gxx applies, the negotiation takes place via Gxx, otherwise via Gx. To support the different IP-CAN bearer establishment modes (UE-only or UE/NW) the PCRF shall:

- shall set the IP-CAN bearer establishment mode for the IP-CAN session based on operator configuration, network and UE capabilities;

- shall, if the bearer establishment mode is UE/NW, decide what mode (UE or NW) shall apply for a PCC rule and resolve race conditions between for requests between UE-initiated and NW-initiated requests;

NOTE 2: For an operator-controlled service, the UE and the PCRF may be provisioned with information indicating which mode is to be used.

- may reject a UE request that is already served by a NW-initiated procedure in progress. When rejecting a UE-initiated request by sending a reject indication, the PCRF shall use an appropriate cause value which shall be delivered to the UE.

NOTE 3: This situation may e.g. occur if the PCRF has already triggered a NW-initiated procedure that corresponds to the UE request.

- guarantee the precedence of dynamic PCC rules with SDF template containing SDF filter(s) (and optionally also for SDF templates consisting of an application identifier) for network controlled services in the service data flow detection process at the PCEF by setting the PCC rule precedence information to appropriate values.

If an AF requests the PCRF to report on the change of type of IP-CAN, the PCRF shall provide to the AF the information about the IP-CAN type the user is currently using and upon indication of change of IP-CAN type, notify the AF on changes of the type of IP-CAN. In the case of 3GPP IP-CAN, the information of the Radio Access Technology Type (e.g. UTRAN) shall be also reported to the AF. If IP flow mobility as specified in TS 23.261 [23] applies, the PCRF shall provide to the AF the IP-CAN type information about the IP-CAN type the service data flow currently transported within and upon indication of change of IP-CAN type, notify the AF on changes of the type of IP-CAN. In the case of 3GPP IP-CAN, the information of the Radio Access Technology Type (e.g. UTRAN) shall be also reported to the AF. When IP flow mobility is allowed within the same IP-CAN session, the PCRF shall only report the IP-CAN type change when the IP flow mobility applies to the service information provided by the AF.

If an AF requests the PCRF to report Access Network Information, the PCRF shall set the Access Network Information report parameters in the corresponding PCC rule(s) or QoS rule(s) and provision them together with the corresponding event trigger to the PCEF or BBERF as per procedure in clause 7.4.2. For those PCC rule(s) or QoS rule(s) based on preliminary service information the PCRF may assign the QCI and ARP of the default bearer to avoid signalling to the UE. In addition the SDF filter(s) shall not be marked as to be used for signalling to the UE as traffic mapping information.

If an AF requests the PCRF to report Access Network Information, the PCRF shall also set the corresponding event trigger to the PCEF or BBERF as per procedure in clause 7.4.2. The PCRF shall, upon receiving the subsequent Access Network Information report corresponding to the AF session from the PCEF or BBERF, forward the Access Network Information as requested by the AF.

If an AF requests the PCRF to report Access Network Charging Correlation Information, the PCRF shall provide to the AF the Access Network Charging Correlation Information, which will identify the usage reports that include measurement for the flows, once the Access Network Charging Correlation Information is known at the PCRF. If not known in advance, the PCRF subscribes for the Access Network Charging Correlation Information event for the applicable PCC rule(s).

If Gxx applies and the PCEF provided information about required event triggers, the PCRF shall provide these event triggers to the BBERF and notify the PCEF of the outcome of the provisioning procedure by using the PCRF initiated IP-CAN Session Modification procedure, as defined in clause 7.4.2. The PCRF shall include the parameter values received in the response from the BBERF in the notification to the PCEF. When multiple BBERFs exist (e.g. in IP flow mobility case), the PCEF may subscribe to different or common set of event triggers at different BBERFs; when the PCRF receives event notification from any BBERF, the PCRF shall include both the parameters values received from the BBERF and also the information for identifying the BBERF in the notification to the PCEF.

If Sd applies and the TDF provided information about required event triggers, the PCRF shall provide these event triggers to the PCEF or BBERF, if Gxx applies, and notify the TDF of the outcome of the provisioning procedure within the PCEF initiated IP-CAN Session Modification procedure, as defined in clause 7.4.1. The PCRF shall include the parameter values, received in the response from the PCEF/BBERF, in the notification to the TDF. The relevant Event Triggers are: PLMN change, Location change, Change in type of IP-CAN, RAT type change, SGSN change, Serving GW change.

NOTE 4: For IP flow mobility feature enabled, the TDF doesn't have accurate information about the location and the type of RAT the user is attached to.

When the PCRF gets an event report from the BBERF that is required by the PCEF, the PCRF shall forward this event report to the PCEF.

When the PCRF gets an Event Report from the PCEF/BBERF that is required by the TDF, the PCRF shall forward this Event Report to the TDF.

The PCRF may support usage monitoring control. Usage is defined as volume of user plane traffic.

The PCRF may receive information about total allowed usage per PDN and UE from the SPR, i.e. the overall amount of allowed resources (traffic volume) that are to be monitored for the PDN connections of a user. In addition information about total allowed usage for Monitoring key(s) per PDN and UE may also be received from the SPR.

For the purpose of usage monitoring control the PCRF shall request the Usage report trigger and provide the necessary usage threshold(s) upon which the requested node (PCEF or TDF) shall report to the PCRF. The PCRF shall decide if and when to activate usage monitoring to the PCEF and TDF.

The PCRF may provide a Monitoring time to the PCEF/TDF for the Monitoring keys(s) and optionally specify a subsequent threshold value for the usage after the Monitoring time.

If the PCEF reports usage before the Monitoring time is reached, the Monitoring time is not retained by the PCEF. Therefore the PCRF may again provide a Monitoring time and optionally the subsequent threshold value for the usage after the Monitoring time in the response.

It shall be possible for the PCRF to request a usage report from the requested node (PCEF or TDF) containing the accumulated volume usage since the time of the last usage report.

NOTE 5: The PCRF ensures that the number of requests/following policy decisions provided over Gx/Sd reference point do not cause excessive signalling load by e.g. assigning the same time for the report only for a preconfigured number of IP-CAN/TDF sessions.

Once the PCRF receives a usage report from the requested node (PCEF or TDF) the PCRF shall deduct the value of the usage report from the totally allowed usage for that PDN and UE (in case usage per IP-CAN session is reported). If usage is reported from the TDF or the PCEF, the PCRF shall deduct the value of the usage report from the totally allowed usage for individual Monitoring key(s) for that PDN and UE (in case of usage for one or several Monitoring keys is reported).

NOTE 6: The PCRF maintains usage thresholds for each Monitoring key and IP-CAN session that is active for a certain PDN and UE. Updating the total allowanced usage after the PCEF reporting, minimizes the risk of exceeding the usage allowance.

If the PCEF or TDF reports usage for a certain Monitoring key and if monitoring shall continue for that Monitoring key then the PCRF shall provide new threshold value(s) in the response to the PCEF or TDF respectively. If Monitoring time and subsequent threshold value are used then the PCRF provides them to the PCEF or TDF as well.

If monitoring shall no longer continue for that Monitoring key, then the PCRF shall not provide a new threshold in the response to the PCEF / TDF.

NOTE 7: If the PCRF decides to deactivate all PCC rules or ADC rules associated with a certain Monitoring key, then the conditions defined in clause 6.6.2 for continued Monitoring will no longer be fulfilled for that Monitoring key.

If all IP-CAN session of a user to the same APN is terminated, the PCRF shall store the remaining allowed usage, i.e. the information about the remaining overall amount of resources, in the SPR.

The PCRF may authorise an application service provider to request specific PCC decisions (e.g. authorisation to request sponsored IP flows, authorisation to request QoS resources). For sponsored data connectivity (see Annex N), the PCRF may receive a usage threshold from the AF.

If the AF specifies a usage threshold, the PCRF shall use the Sponsor Identity to construct a Monitoring key for monitoring the volume of user plane traffic, and invoke usage monitoring on the PCEF. The PCRF shall notify the AF when the PCEF reports that a usage threshold for the Monitoring key is reached provided that the AF requests to be notified for this event. If the usage threshold is reached, the AF may terminate the AF session or provide a new usage threshold to the PCRF. Alternatively, the AF may allow the session to continue without specifying a usage threshold. If the AF decides to allow the session to continue without specifying a usage threshold, then monitoring in the PCEF shall be discontinued for that monitoring key by the PCRF, unless there are other reasons for continuing the monitoring.

If the AF revokes the service information and the AF has notified previously a usage threshold to the PCRF, the PCRF shall report the usage up to the time of the revocation of service authorization.

If the IP-CAN session terminates and the AF has specified a usage threshold then the PCRF shall notify the AF of the consumed volume of user plane traffic since the last usage report.

The PCRF performs authorizations based on sponsored data connectivity profiles stored in the SPR. If the AF is in the operator's network and is based on the OSA/Parlay-X GW (TS 23.198 [24]), the PCRF is not required to verify that a trust relationship exists between the operator and the sponsors.

If the H-PCRF detects that the UE is accessing the sponsored data connectivity in the roaming scenario with home routed access, it may allow the sponsored data connectivity in the service authorization request, reject the service authorization request, or initiate the AF session termination based on home operator policy.

NOTE 8: Sponsored data connectivity is not supported in the roaming with visited access scenario in this Release.

For the solicited application reporting, it is PCRF's responsibility to coordinate the PCC rules and QoS rules, if applicable, with ADC rules in order to ensure consistent service delivery.

The PCRF uses the information relating to subscriber spending available in the OCS as input for policy decisions related to e.g. QoS control, gating or charging conditions.

6.2.1.1 Input for PCC decisions

The PCRF shall accept input for PCC decision-making from the PCEF, the BBERF if present, the TDF if present, the SPR and if the AF is involved, from the AF, as well as the PCRF may use its own predefined information. These different nodes should provide as much information as possible to the PCRF. At the same time, the information below describes examples of the information provided. Depending on the particular scenario all the information may not be available or is already provided to the PCRF.

The PCEF and/or BBERF may provide the following information:

- Subscriber Identifier;
- IPv4 address of the UE;
- IPv6 network prefix assigned to the UE;
- IP flow routing information (if IP flow mobility is used)

NOTE 1: This information is provided only by the PCEF

- IP-CAN bearer attributes;
- Request type (initial, modification, etc.);
- Type of IP-CAN (e.g. GPRS, I-WLAN, etc.);

NOTE 2: The Type of IP-CAN parameter should allow extension to include new types of accesses.

- Location of the subscriber;

NOTE 3: See clause 6.1.4 for the description of this location information.

NOTE 4: Depending on the type of IP-CAN, the limited update rate for the location information at the PCEF may lead to a UE moving outside the area indicated in the detailed location information without notifying the PCEF.

- A PDN ID;
- A PLMN identifier;
- IP-CAN bearer establishment mode.

The PCEF enhanced with ADC or the TDF may provide the following information:

- Detected application identifier;
- Allocated application instance identifier;
- Detected service data flow descriptions.

The SPR may provide the following information for a subscriber, connecting to a specific PDN:

- Subscriber's allowed services, i.e. list of Service IDs;
- For each allowed service, a pre-emption priority;

- Information on subscriber's allowed QoS, including:
  - the Subscribed Guaranteed Bandwidth QoS;
  - a list of QoS class identifiers together with the MBR limit and, for real-time QoS class identifiers, GBR limit.
- Subscriber's charging related information;
- Spending limits profile containing an indication that policy decisions depend on policy counters available at the OCS that has a spending limit associated with it and optionally the list of relevant policy counters.
- Subscriber category;
- Subscriber's usage monitoring related information;
- Subscriber's profile configuration;
- Sponsored data connectivity profiles;
- MPS EPS Priority, MPS Priority Level (See TS 23.401 [17] for more detail on MPS Subscription);
- IMS Signalling Priority.

NOTE 5: The MPS Priority Level represents user priority.

NOTE 6: The MPS Priority Level is one among other input data such as operator policy for the PCRF to set the ARP value. The MPS EPS Priority, and MPS Priority Level are consistent with the corresponding parameters defined in the HSS.

The AF, if involved, may provide the following application session related information, e.g. based on SIP and SDP:

- Subscriber Identifier;
- IP address of the UE;
- Media Type;
- Media Format, e.g. media format sub-field of the media announcement and all other parameter information (a= lines) associated with the media format;
- Bandwidth;
- Sponsored data connectivity information (see clause 5.2.1);
- Flow description, e.g. source and destination IP address and port numbers and the protocol;
- AF application identifier;
- AF Communication Service Identifier (e.g. IMS Communication Service Identifier), UE provided via AF;
- AF Application Event Identifier;
- AF Record Information;
- Flow status (for gating decision);
- Priority indicator, which may be used by the PCRF to guarantee service for an application session of a higher relative priority;

NOTE 7: The AF Priority information represents session/application priority and is separate from the MPS EPS Priority indicator.

- Emergency indicator;
- Application service provider.

NOTE 8: The application service provider may be identified in numerous forms e.g. the AF application identifier or the host realm at Diameter level.

The OCS, if involved, may provide the following information for a subscriber:

- Policy counter status for each relevant policy counter.

In addition, the predefined information in the PCRF may contain additional rules based on charging policies in the network, whether the subscriber is in its home network or roaming, depending on the IP-CAN bearer attributes.

The QoS Class Identifier (see clause 6.3.1) in the PCC rule is derived by the PCRF from AF or SPR interaction if available. The input can be SDP information or other available application information, in line with operator policy.

The Allocation/Retention Priority in the PCC Rule is derived by the PCRF from AF or SPR interaction if available, in line with operator policy.

6.2.1.2 Subscription information management in the PCRF

The PCRF may request subscription information from the SPR for an IP-CAN session at establishment or a gateway control session at establishment. The subscription information may include user profile configuration indicating whether application detection and control should be enabled. The PCRF should specify the subscriber ID and, if available, the PDN identifier in the request. The PCRF should retain the subscription information that is relevant for PCC decisions until the IP-CAN session termination and the gateway control session termination.

The PCRF may request notifications from the SPR on changes in the subscription information. Upon reception of a notification, the PCRF shall make the PCC decisions necessary to accommodate the change in the subscription and updates the PCEF and/or the BBERF, and/or the TDF by providing the new PCC and/or QoS and/or ADC decisions if needed. The PCRF shall send a cancellation notification request to the SPR when the related subscription information has been deleted.

6.2.1.3 V-PCRF

6.2.1.3.1 General

The V-PCRF (Visited-Policy and Charging Rules Function) is a functional element that encompasses policy and charging control decision functionalities in the V-PLMN. The V-PCRF includes functionality for both home routed access and visited access (local breakout).

The V-PCRF determines based on the subscriber identity if a request is for a roaming user.

A Gateway Control Session request received over the Gxx reference point may trigger a request over the S9 reference point from the V-PCRF to the H-PCRF.

If a Gateway Control Session establishment request is received that can not be bound to an existing Gx session then the associated IP-CAN session is either home routed or it is visited access but the IP-CAN session establishment request has not yet been received over Gx.

For this case the V-PCRF may determine based on PDN-Id carried in the GW control session and roaming agreements if the request shall be proxied to the H-PCRF over S9 or not. The V-PCRF may choose not to proxy the Gateway Control Session Establishment only if the PDN-Id indicates the request is for visited access.

The Gateway Control Session Establishment request should only be proxied to the H-PCRF over S9 in case the V-PCRF is configured to do so e.g. based on roaming agreement.

NOTE 1: Proxying the Gateway Control Session Establishment makes the H-PCRF aware of the Gateway Control Session and enables binding in case a subsequent IP-CAN Session is established with home routed access or visited access.

If the V-PCRF determines that a Gateway Control Session Establishment shall be proxied to the H-PCRF over S9 then the reply from the H-PCRF shall also be communicated back to the GW(BBERF) over Gxx.

In case the V-PCRF determines that a Gateway Control Session Establishment request shall not be proxied, then the V-PCRF shall respond to the request made by the GW(BBERF) without notifying the H-PCRF.

If an IP-CAN session establishment request is received for a roaming user over the Gx reference point, then the V-PCRF shall conclude that the IP-CAN session use visited access and act as described in clause 6.2.1.3.3.

NOTE 2: Through roaming agreement, the HPLMN operator may allow the VPLMN operator to operate the V-PCRF without using the capabilities described in 6.2.1.3.3 (i.e. no S9 is used). In such case, the PCRF in the VPLMN has no access to subscriber policy information from the HPLMN, only static policies will apply based on roaming agreements. The VPCRF may also interact with the AF in the VPLMN in order to generate PCC Rules for services delivered via the VPLMN. V-PCRF uses locally configured policies according to the roaming agreement with the HPLMN operator as input for PCC Rule generation.

If a Gateway Control and QoS rules provision is received by the V-PCRF over the S9 reference point for a Gateway Control session which is not associated, at the V-PCRF, with an existing Gx session, the V-PCRF shall conclude that the IP-CAN session associated with the Gateway Control session is home routed, and act as described in clause 6.2.1.3.2.

6.2.1.3.2 V-PCRF and Home Routed Access

The V-PCRF provides functions to proxy Gxx interactions between the BBERF and the H-PCRF as follows:

- Gateway Control Session establishment and termination;
- Gateway Control and QoS Policy Rules Provision;
- Gateway Control and QoS Rule Request.

The V-PCRF provides functions to enforce visited operator policies regarding QoS authorization requested by the home operator as indicated by the roaming agreements. The V-PCRF informs the H-PCRF when a request has been denied and may provide the acceptable QoS Information.

Within an IP-CAN session, a different V-PCRF may be selected when a new Gateway Control Session is established.

6.2.1.3.3 V-PCRF and Visited Access (local breakout)

The V-PCRF provides functions to:

- Enforce visited operator policies regarding QoS authorization requested by the home operator e.g. on a per QCI or service basis as indicated by the roaming agreements. The V-PCRF informs the H-PCRF when a request has been denied and may provide the acceptable QoS Information for the service.
- When Gxx interaction is terminated locally at the V-PCRF, perform Gx to Gateway Control Session linking.
- When Gxx interaction is terminated locally at the V-PCRF, extract QoS rules (defined in clause 6.5) from PCC rules (defined in clause 6.3) provided by the H-PCRF over the S9 reference point. The V-PCRF provides updated PCC rules to the PCEF and QoS rules to the BBERF, if appropriate.
- For the case of AF in the VPLMN:
  - Proxy Rx authorizations over the S9 reference point to the H-PCRF;
  - Relay event subscriptions and notifications between the H-PCRF and V-AF

When Gx interactions are proxied between the PCEF and the H-PCRF, the V-PCRF proxies:

- Indication of IP-CAN Session Establishment and Termination;
- Policy and Charging Rule Provisioning;
- Request Policy and Charging Rules.

If a Gateway Control Session is used and if during the IP-CAN Session Establishment the Gateway Control Session Establishment procedure was proxied to the H-PCRF (according to the logic in clause 6.2.1.3.1), then the V-PCRF shall also proxy all other Gateway Control Session procedures to the H-PCRF.

If the Gateway Control Session was not proxied to the H-PCRF then the V-PCRF shall handle all Gateway Control Session procedures locally and not proxy them to the H-PCRF. This has the following implications:

- An IP-CAN Session modification may trigger the V-PCRF to update the Gateway Control Session if required in order to maintain the alignment of PCC and QoS Rules.

- An IP-CAN Session termination procedure may trigger the V-PCRF to terminate the Gateway Control Session if the Gateway Control Session was established for the purpose of a single IP-CAN session. Otherwise a Gateway Control and QoS Rules Provision procedure may be initiated to remove the QoS Rules associated with the IP-CAN session.

- On receiving a Gateway Control and QoS Rules Request message from the BBERF, the V-PCRF performs the procedure described in clause 7.7.3.2 for the event reporting for PCEF in visited network and locally terminated Gxx interaction.

NOTE 1: The V-PCRF has to set the event triggers at the PCEF in a way that the PCEF would trigger a PCEF initiated IP-CAN Session Modification Procedure if an interaction with the H-PCRF is required.

When Rx components are proxied between an AF in the VPLMN and the H-PCRF, the V-PCRF shall proxy service session information between the AF and the H-PCRF.

The V-PCRF shall support functionality to generate ADC rules from the PCC rules providing application detection and control as instructed by the H-PCRF over S9. The V-PCRF shall provide updated PCC Rules to the PCEF, and generated ADC rules to the TDF, as appropriate in the VPLMN configuration.

NOTE 2: There may be situations where the TDF or PCEF enhanced with ADC is not able to detect the traffic requested by the H-PCRF. Prior agreements could be arranged to ensure that there is a common understanding of the meaning of application identifiers transferred between PLMNs.

The V-PCRF shall install the event triggers in the PCEF, in the TDF and in the BBERF that were provided for the IP-CAN session and install additional event triggers in the BBERF that are relevant only to the PCEF (i.e. such event triggers are typically set by the OCS) or the TDF. On receiving an Event report from the PCEF/BBERF, the V-PCRF forwards it to the TDF, if TDF has previously subscribed for it.

NOTE 3: Event reports over Gxx that are relevant only to the PCEF will not trigger a PCEF initiated IP-CAN session modification procedure.

Within an IP-CAN session the same V-PCRF remains for the whole lifetime of the IP-CAN session.

6.2.1.4 H-PCRF

6.2.1.4.1 General

The H-PCRF (Home-Policy and Charging Rules Function) is a functional element that encompasses policy and charging control decision functionalities in the H-PLMN and in the VPLMN. The H-PCRF includes functionality for both home routed access and visited access (local breakout).

If a Gateway Control Session is used and a Gateway Control Session Establishment is indicated over S9, then one or more of the following cases applies:

1. One (or several) home routed IP-CAN sessions are known to the H-PCRF that can be bound to the Gateway Control session. For such IP-CAN sessions, the H-PCRF shall act as described in clause 6.2.1.4.2.

2. No IP-CAN session is known to the H-PCRF that can be bound to the Gateway Control session. This is the case when an IP-CAN session establishment process has not yet been initiated over Gx or S9.

If an IP-CAN Session Establishment is received over Gx then the H-PCRF shall conclude that the IP-CAN session is home routed and act as described in clause 6.2.1.4.2.

If an IP-CAN Session Establishment is received over S9 then the H-PCRF shall conclude that the IP-CAN session use visited access and act as described in clause 6.2.1.4.3.

6.2.1.4.2 H-PCRF and Home Routed Access

The H-PCRF shall use the S9 reference point to proxy information to the BBERF via the V-PCRF for the following related Gxx procedures:

- Gateway Control Session establishment and termination;

- Gateway Control and QoS Policy Rules Provision;

- Gateway Control and QoS Rule Request.

If an IP-CAN session termination is received over the Gx reference point, then the H-PCRF shall initiate a Gateway Control Session Termination procedure over S9 if the Gateway Control Session was established for the purpose of a single IP-CAN session. Otherwise a Gateway Control and QoS Rules Provision procedure may be initiated over S9 to remove the QoS Rules in the BBERF associated with the IP-CAN session.

6.2.1.4.3 H-PCRF and Visited Access (Local Breakout)

The H-PCRF shall use the S9 reference point to proxy information to the PCEF (and indirectly also to the BBERF when the Gateway Control Session is not proxied to the H-PCRF, and indirectly also to the TDF) via the V-PCRF for the following related Gx procedures:

- Indication of IP-CAN Session Establishment and Termination messages;
- Policy and Charging Rule Provisioning messages;
- Request Policy and Charging Rules messages.

When the Gateway Control Session is proxied to the H-PCRF, the H PCRF shall use the S9 reference point to proxy information to the BBERF via the V PCRF for the following related Gxx procedures:

- Indication of Gateway Control Session Establishment and Termination messages;
- QoS Rules Provisioning messages;
- Request QoS Rules messages.

The H-PCRF shall generate PCC rules for application traffic detection, notification and policy control when the TDF is located in the VPLMN.

The H-PCRF should generate PCC rules for both of the cases when the AF is located in the VPLMN and when the AF is located in the HPLMN. The H-PCRF provides the PCC rules to the V-PCRF over the S9 reference point.

6.2.1.5 Handling of Multiple BBFs associated with the same IP-CAN session

6.2.1.5.1 Handling of two BBFs associated with the same IP-CAN session during handover

The procedures specified in this clause apply when the case of multiple BBFs occurs during handovers. The two BBFs can be located in two separate BBERFs, or one BBF is located in the PCEF and the other one in a BBERF. If the PCRF determines that there is more than one BBF associated with the same IP-CAN session, the PCRF handles the multiple BBFs as follows:

- The PCRF classifies the BBERF which reports the same IP-CAN type as that reported by the PCEF as the primary BBERF and a BBERF that reports an IP-CAN type different from that reported by the PCEF as non-primary BBERF. If there are more than one BBERFs that report the same IP-CAN type as that reported by the PCEF, the BBERF that last created the GW Control Session with the PCRF is classified as the primary BBERF and other BBERF(s) are classified as non-primary BBERF(s).

NOTE 1: During handover where the BBF moves from a BBERF to the PCEF (e.g. handover from PMIP to GTP), when the PCEF reports a new IP-CAN type, the BBERF is classified as a non-primary BBERF. There is no primary BBERF but the active BBF is in the PCEF.

NOTE 2: During handover where the BBF moves from the PCEF to a BBERF (e.g. handover from GTP to PMIP), when the BBERF creates a Gateway Control Session, it is classified as a non-primary BBERF. This BBERF subsequently gets classified as the primary BBERF when the PCEF reports an IP-CAN type which is the same as that reported by the BBERF.

- When a new (primary/non-primary) BBERF supporting NW/UE bearer establishment mode creates a GW Control session, the PCRF provides to the new BBERF QoS rules corresponding to SDFs. For a change of IP-CAN type, the QoS parameters of some of the QoS rules may be changed or some QoS rules may not be provided to the new BBERF, e.g. depending of the capability of the target RAT. When a new (primary/non-primary) BBERF supporting only UE bearer establishment mode creates a GW Control session, the PCRF

authorizes the setup of the default bearer and only pushes down QoS rules in response to specific requests from the BBERF.

NOTE 3: After completion of the handover procedure to the new BBERF, the UE can still initiate the access specific procedures to modify or release the resources that were originally allocated based on UE-initiated resource allocation. Such operations and the associated changes to QoS rules are handled following the normal UE-initiated resource management procedures.

NOTE 4: To facilitate the UE's determination of QoS resources in the target access allocated to pre-existing IP flows the access system is required to provide packet filters with the same content as that in the SDF template filters received over the Gx/Gxx interface (see clause 6.1.9).

- If the BBF is located in any of the BBERF, the PCRF keeps track of QoS rules activation by all the BBERFs. The PCRF updates PCC rules to the PCEF based on activation status of QoS rules in the primary BBERF.
- If the primary-BBERF reports failure to activate a QoS rule, the PCRF also removes the same QoS rule from the non-primary BBERFs, if any are already installed, and the corresponding PCC rule from the PCEF. If a non-primary BBERF reports failure to install a QoS rule, the PCRF updates the status for that particular BBERF in its record but does not perform any further action.
- When path-switch occurs and the PCEF informs the PCRF of a new IP-CAN type, if a BBERF is re-classified as a primary BBERF, the PCRF may update QoS rules in the BBERF corresponding to the PCC rules in the PCEF.
- For the case of UE initiated resource reservation through the non-primary BBERF: If a non-primary BBERF request results in a change of the QoS rules active in the primary-BBERF, e.g. creation of a new QoS rule or results in modification of an existing QoS rule, then the PCRF shall reject the request.

6.2.1.5.2 Handling of multiple BBFs with IP-CAN session flow mobility

The procedures specified in this clause apply when the case of multiple BBFs occurs during flow mobility scenarios as specified in TS 23.261 [23]. The multiple BBFs can be located in either separate BBERFs, or one BBF is located in the PCEF and the other ones in separate BBERFs. If the PCRF determines that there is more than one BBF associated with the same IP-CAN session due to flow mobility, the PCRF handles the multiple BBFs as follows:

- The default route may be associated with one of the BBFs. The PCRF does not differentiate between primary and secondary BBF.
- If, based on routing information received from the PCEF, the PCRF determines that the bearer binding for a service data flow is located in a BBERF, the PCRF provides QoS rules for bearer binding to the appropriate BBERF/BBF. Each service data flow is associated with one BBF based on the routing information. If no explicit routing information for a service data flow is available from the PCEF, the PCRF provides PCC/QoS rules for the service data flow based on the default route.
- When the route of a service data flow changes from one source BBF to another target BBF, the PCRF removes the QoS rules related to the service data flow from the source BBF (if the source BBF is located in a BBERF) and provisions the QoS rules related to the service data flow to the target BBF (if the target BBF is located in a BBERF).
- The PCRF may select different bearer establishment mode for different BBFs. Provision of PCC/QoS rules to a specific BBF follows the rule provision procedures based on the bearer establishment mode selected for that BBF.

6.2.2 Policy and Charging Enforcement Function (PCEF)

6.2.2.1 General

The PCEF encompasses service data flow detection, policy enforcement and flow based charging functionalities.

This functional entity is located at the Gateway (e.g. GGSN in the GPRS case, and PDG in the WLAN case). It provides service data flow detection, user plane traffic handling, triggering control plane session management (where the IP-CAN permits), QoS handling, and service data flow measurement as well as online and offline charging interactions.

A PCEF shall ensure that an IP packet, which is discarded at the PCEF as a result from PCC rule enforcement or flow based charging, is neither reported for offline charging nor cause credit consumption for online charging.

NOTE 1: For certain cases e.g. suspected fraud an operator shall be able to block the service data flow but still be able to account for any packets associated with any blocked service data flow.

The PCEF is enforcing the Policy Control as indicated by the PCRF in two different ways:

- Gate enforcement. The PCEF shall allow a service data flow, which is subject to policy control, to pass through the PCEF if and only if the corresponding gate is open;
- QoS enforcement:
  - QoS class identifier correspondence with IP-CAN specific QoS attributes. The PCEF shall be able to convert a QoS class identifier value to IP-CAN specific QoS attribute values and determine the QoS class identifier value from a set of IP-CAN specific QoS attribute values.
  - PCC rule QoS enforcement. The PCEF shall enforce the authorized QoS of a service data flow according to the active PCC rule (e.g. to enforce uplink DSCP marking).
  - IP-CAN bearer QoS enforcement. The PCEF controls the QoS that is provided to a combined set of service data flows. The policy enforcement function ensures that the resources which can be used by an authorized set of service data flows are within the "authorized resources" specified via the Gx interface by "authorized QoS". The authorized QoS provides an upper bound on the resources that can be reserved (GBR) or allocated (MBR) for the IP-CAN bearer. The authorized QoS information is mapped by the PCEF to IP-CAN specific QoS attributes. During IP-CAN bearer QoS enforcement, if packet filters are provided to the UE, the PCEF shall provide packet filters with the same content as that in the SDF template filters received over the Gx interface.

The PCEF is enforcing the charging control in the following way:

- For a service data flow (defined by an active PCC rule) that is subject to charging control, the PCEF shall allow the service data flow to pass through the PCEF if and only if there is a corresponding active PCC rule with and, for online charging, the OCS has authorized credit for the charging key. The PCEF may let a service data flow pass through the PCEF during the course of the credit re-authorization procedure.

For a service data flow (defined by an active PCC rule) that is subject to both Policy Control and Charging Control, the PCEF shall allow the service data flow to pass through the PCEF if and only if the right conditions from both policy control and charging control happen. I.e. the corresponding gate is open and in case of online charging the OCS has authorized credit for its charging key.

For a service data flow (defined by an active PCC rule) that is subject to policy control only and not charging control, the PCEF shall allow the service data flow to pass through the PCEF if and only if the conditions for policy control are met.

A PCEF may be served by one or more PCRF nodes. The PCEF shall contact the appropriate PCRF based on the packet data network (PDN) connected to, together with, a UE identity information (if available, and which may be IP-CAN specific). It shall be possible to ensure that the same PCRF is contacted for a specific UE irrespective of the IP-CAN used.

The PCEF shall, on request from the PCRF, modify a PCC rule, using the equivalent PCEF behaviour as the removal of the old and the activation of the new (modified) PCC rule. The PCEF shall modify a PCC rule as an atomic operation. The PCEF shall not modify a predefined PCC rule on request from the PCRF.

The PCEF should support predefined PCC rules.

For online charging, the PCEF shall manage credit as defined in clause 6.1.3.

The operator may apply different PCC rules depending on different PLMN. The PCEF shall be able to provide identifier of serving network to the PCRF, which may be used by the PCRF in order to select the PCC rule to be applied.

The operator may configure whether Policy and Charging Control is to be applied based on different access point.

The PCEF shall gather and report IP-CAN bearer usage information according to clause 6.1.2. The PCEF may have a pre-configured Default charging method. Upon the initial interaction with the PCRF, the PCEF shall provide pre-configured Default charging method if available.

At IP-CAN session establishment the PCEF shall initiate the IP-CAN Session Establishment procedure, as defined in clause 7.2. In case the SDF is tunnelled at the BBERF, the PCEF shall inform the PCRF about the mobility protocol tunnelling header of the service data flows. In case 2a, defined in clause 7.1, the PCEF may provide charging ID information to the PCRF. The PCEF shall inform the PCRF on whether it is enhanced with ADC, or provide the TDF address, if one is configured at the PCEF. If no PCC rule was activated for the IP-CAN session, the PCEF shall reject the IP-CAN session establishment.

If there is no PCC rule active for a successfully established IP-CAN session at any later point in time, e.g., through a PCRF initiated IP-CAN session modification, the PCEF shall initiate an IP-CAN session termination procedure, as defined in clause 7.3.2. If the PCRF terminates the Gx session, the PCEF shall initiate an IP-CAN session termination procedure, as defined in clause 7.3.2.

If there is no PCC rule active for a successfully established IP-CAN bearer at any later point in time, e.g., through a PCRF initiated IP-CAN session modification, the PCEF shall initiate an IP-CAN bearer termination procedure, as defined in clause 7.4.1.

If the IP-CAN session is modified, e.g. by changing the characteristics for an IP-CAN bearer, the PCEF shall first use the event trigger to determine whether to request the PCC rules for the modified IP-CAN session from the PCRF; afterwards, the PCEF shall use the re-authorisation triggers, if available, in order to determine whether to require re-authorisation for the PCC rules that were either unaffected or modified. If the PCEF receives an unsolicited update of the PCC rules from the PCRF (IP-CAN session modification, clause 7.4.2), the PCC rules shall be activated, modified or removed as indicated by the PCRF.

The PCEF shall inform the PCRF about the outcome of a PCC rule operation. If network initiated procedures apply to the PCC rule and the corresponding IP-CAN bearer can not be established or modified to satisfy the bearer binding, then the PCEF shall reject the activation of a PCC rule.

NOTE 2: In case of a rejection of a PCC rule activation the PCRF may e.g. modify the attempted PCC rule, de-activate or modify other PCC rules and retry activation or abort the activation attempt and, if applicable, inform the AF that transmission resources are not available.

If network initiated procedures for IP-CAN bearer establishment apply this also includes provisioning the UE with traffic mapping information. See clause 6.1.9, Annex A and Annex D for details.

If another IP-CAN session is established by the same user, this is treated independently from the existing IP-CAN session.

To support the different IP-CAN bearer establishment modes (UE-only or UE/NW) the PCEF shall:

- forward the network and UE capabilities to the PCRF;
- apply the IP-CAN bearer establishment mode for the IP-CAN session set by the PCRF.

During an IP-CAN session modification, the PCEF shall provide information (belonging to the IP-CAN bearer established or modified) to the PCRF as follows:

- in UE-only bearer establishment mode, the PCEF shall send the full QoS and traffic mapping information;
- in UE/NW bearer establishment mode, the PCEF shall:
  - at UE-initiated bearer establishment, send the full QoS and traffic mapping information;
  - at UE-initiated bearer modification, send information on the requested change to QoS bitrates and changes to the traffic mapping information;
- at NW-initiated bearer establishment or modification, the PCEF shall not send any QoS or traffic mapping information.

When flow mobility as specified in TS 23.261 [23] applies, the PCEF shall provide IP flow mobility routing information to the PCRF as follows:

- the default route to be used if no explicit routing information for a service data flow is provided;
- the route for an IP flow.

The PCEF shall derive the routing information from the IP flow mobility flow bindings installed in the PCEF, as defined in TS 23.261 [23].

If there are events which can not be monitored in the PCEF, the PCEF shall provide the information about the required event triggers to the PCRF using the PCEF initiated IP-CAN Session Modification procedure, as defined in clause 7.4.1, or in the response to a PCRF initiated IP-CAN Session Modification, as defined in clause 7.4.3. If the triggers were provided by the OCS at credit authorization, it is an implementation option whether a successful confirmation is required from the PCRF in order for the PCEF to consider the credit (re-)authorization procedure to be successful.

IP-CAN-specific parameters may be sent by the PCRF to the PCEF or the PCEF to the PCRF. The IP-CAN Session Modification procedure may be used to deliver these parameters to allow interaction between the BBERF and the PCEF by way of the PCRF. This is required in accesses that require these parameters to be sent indirectly.

The PCEF shall support usage monitoring as specified in clause 4.4.

The PCEF enhanced with ADC shall handle application traffic detection as per request from PCRF as well as report about the detected application traffic along with service data flow descriptions, if deducible, to the PCRF, if requested by the PCRF.

6.2.2.2 Service data flow detection

This clause refers to the detection process that identifies the packets belonging to a service data flow. Each PCC rule contains a service data flow template, which defines the data for the service data flow detection as a set of service data flow filters or an application identifier referring to an application detection filter.

For PCC rules that contain an application identifier (i.e. that refer to an application detection filter), the order and the details of the detection are implementation specific. Once an application has been detected, enforcement and charging shall however be applied under consideration of the PCC rule precedence, i.e. when multiple PCC rules overlap, only the enforcement and charging actions of the PCC rule with the highest precedence shall be applied.

The remainder of this clause describes the detection of service data flows identified by a service data flow filter (i.e. does not apply to PCC rules containing an application identifier):

- Each service data flow template may contain any number of service data flow filters;
- Each service data flow filter is applicable uplink, downlink or both uplink and downlink;
- Service data flow filters are applied for each direction, so that the detection is applied independently for the downlink and uplink directions;

NOTE 1: Service data flow filters that apply in both uplink and downlink should be used whenever the underlying IP-CAN and access type supports this.

NOTE 2: A service data flow template may include service data flow filters for one direction, or for both directions.

- Each service data flow filter may contain information about whether the explicit signalling of the corresponding traffic mapping information to the UE is required.

NOTE 3: This information enables e.g. the generation/removal of traffic mapping information for a default IP-CAN bearer as well as the usage of PCC rules with specific service data flow filters on a default IP-CAN bearer without the need to generate traffic mapping information.

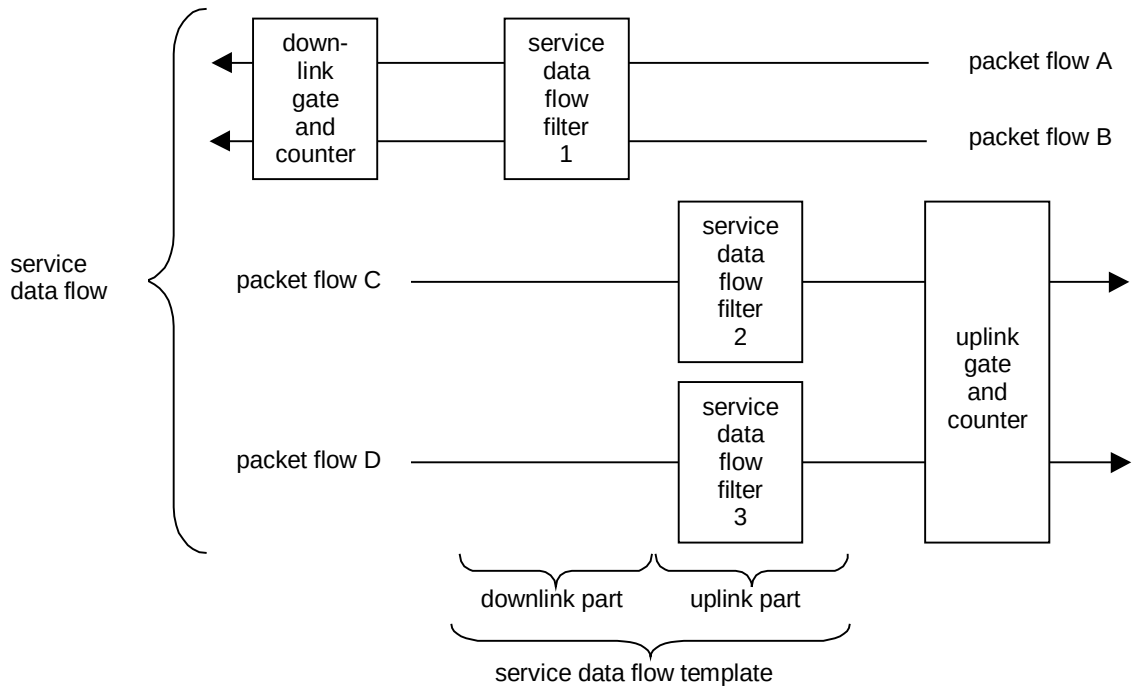

Figure 6.3: Relationship of service data flow, packet flow, service data flow template and service data flow filter

Service data flow filters identifying the service data flow may:

- be a pattern for matching the IP 5 tuple (source IP address or IPv6 network prefix, destination IP address or IPv6 network prefix, source port number, destination port number, protocol ID of the protocol above IP). In the pattern:
  - a value left unspecified in a filter matches any value of the corresponding information in a packet;
  - an IP address may be combined with a prefix mask;
  - port numbers may be specified as port ranges.
  - the pattern can be extended by the Type of Service (TOS) (IPv4) / Traffic class (IPv6) and Mask;
- consist of the destination IP address and optional mask, protocol ID of the protocol above IP, the Type of Service (TOS) (IPv4) / Traffic class (IPv6) and Mask and the IPSec Security Parameter Index (SPI);
- consist of the destination IP address and optional mask, the Type of Service (TOS) (IPv4) / Traffic class (IPv6) and Mask and the Flow Label (IPv6).

NOTE 4: The details about the IPSec Security Parameter Index (SPI), the Type of Service (TOS) (IPv4) / Traffic class (IPv6) and Mask and the Flow Label (IPv6) are defined in TS 23.060 [12] clause 15.3.

- extend the packet inspection beyond the possibilities described above and look further into the packet and/or define other operations (e.g. maintaining state). Such service data flow filters must be predefined in the PCEF.

NOTE 5: Such filters may be used to support filtering with respect to a service data flow based on the transport and application protocols used above IP. This shall be possible for HTTP and WAP. This includes the ability to differentiate between TCP, Wireless-TCP according to WAP 2.0, WDP, etc, in addition to differentiation at the application level. Filtering for further application protocols and services may also be supported.

For downlink traffic, the downlink parts of all the service data flow templates associated with the IP-CAN session for the destination address are candidates for matching in the detection process.

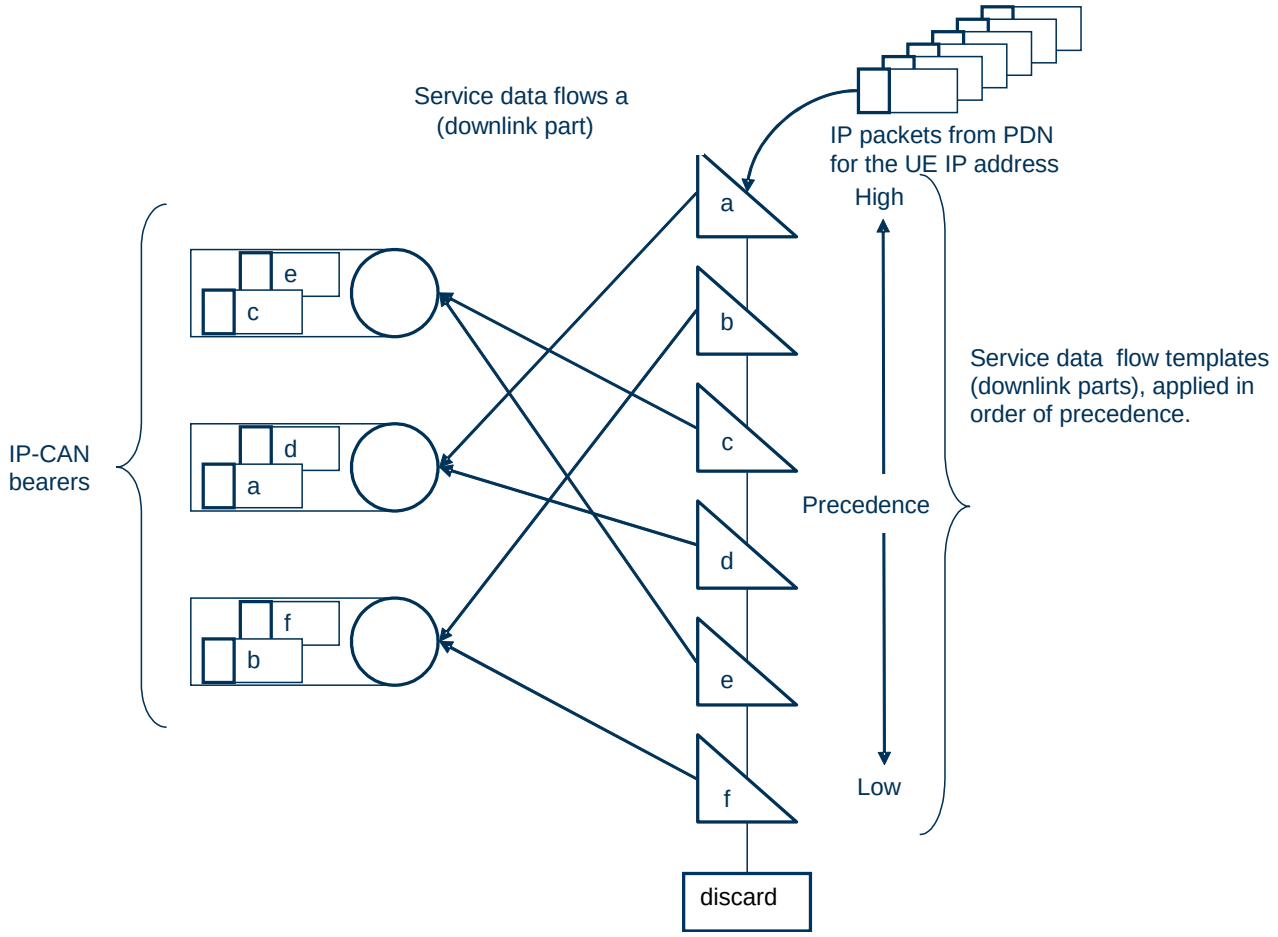

Figure 6.4: The service data flow template role in detecting the downlink part of a service data flow and mapping to IP-CAN bearers

For uplink traffic, the uplink parts of all the service data flow templates associated with the IP-CAN bearer (details according to clause A), are candidates for matching in the detection process.

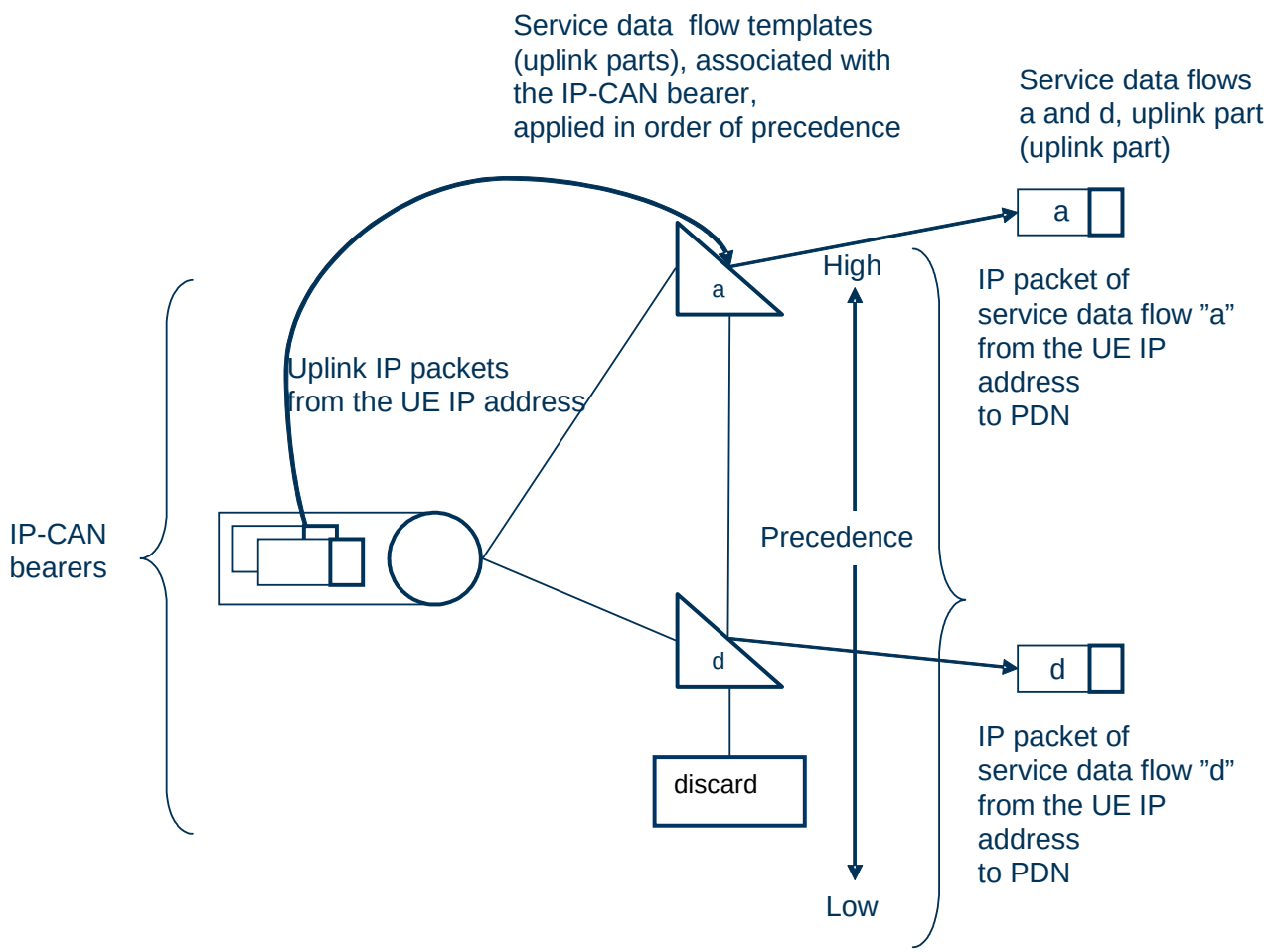

Figure 6.5: The service data flow template role in detecting the uplink part of a service data flow

The PCEF shall discard a packet in case there is no service data flow template of the same direction (i.e. of the IP-CAN session for the downlink or of the IP-CAN bearer for the uplink) detecting the packet.

NOTE 6: For the uplink direction, discarding packets due to no matching service data flow template is also referred to as uplink bearer binding verification. For the case a BBERF is present, uplink bearer binding verification is done by the BBERF.

NOTE 7: To avoid the PCEF discarding packets due to no matching service data flow template, the operator may apply open PCC rules (with wild-carded service data flow filters) to allow for the passage of packets that do not match any other candidate service data flow template.

Service data flow templates shall be applied in the order of their precedence.

6.2.2.3 Measurement

The PCEF shall support data volume, duration, combined volume/duration and event based measurement. The Measurement method indicates what measurement type is applicable to the PCC rule.

NOTE 1: Event based charging is only applicable to predefined PCC rules and PCC rules using an application detection filter (i.e. with an application identifier).

The PCEF measurement measures all the user plane traffic, except traffic that PCC causes to be discarded.

The PCEF shall maintain a measurement per IP-CAN bearer (IP-CAN specific details according to Annex A and Annex D), and Charging Key combination.

If Service identifier level reporting is mandated in a PCC rule, the PCEF shall maintain a measurement for that Charging Key and Service Identifier combination, for the IP-CAN bearer (IP-CAN specific details according to Annex A and Annex D).

NOTE 2: In addition, the GW may maintain IP-CAN bearer level measurement if required by the operator.

The PCEF shall support volume measurement for an IP-CAN session and maintain a measurement for each IP-CAN session for which the PCRF has requested the Usage report trigger and provided threshold values on an IP-CAN session level.

The PCEF shall support volume measurement per Monitoring key and maintain a measurement for each Monitoring key if the PCRF has requested the Usage report trigger and provided threshold values on Monitoring key level.

The PCEF shall support simultaneous volume measurement for usage monitoring on IP-CAN session level and Monitoring key level for the same IP-CAN session.

Volume measurements for usage monitoring purposes on IP-CAN session level and on Monitoring key level shall be performed independently of each other.

If the Usage report reached event trigger is set and a volume threshold is reached, the PCEF shall report this event to the PCRF. The PCEF shall continue to perform volume measurement after the threshold is reached and before a new threshold is provided by the PCRF. At IP-CAN session termination or if the conditions defined in clause 6.6.2 for continued monitoring are no longer met, or if the PCRF explicitly requests a usage report, the PCEF shall inform the PCRF about the resources that have been consumed by the user since the last usage report for the affected Monitoring keys, including the resources consumed before and after the Monitoring time was reached, if provided according to clause 6.2.1.0.

If the Usage thresholds for a Monitoring key are not provided to the PCEF in the acknowledgement of an IP-CAN Session modification where its usage was reported, then the usage monitoring shall not continue in the PCEF for that Monitoring key.

When the Monitoring time occurs, the accumulated volume usage shall be recorded by the PCEF and:

- If the subsequent usage threshold value is provided, the usage threshold shall be reset to this value by the PCEF.
- Otherwise, the usage threshold shall be set by the PCEF to the remaining value of the threshold previously sent by the PCRF (i.e. excluding the accumulated volume usage).

The first usage report after the Monitoring Time was reached shall indicate the volume usage up to the Monitoring time and volume usage after the Monitoring time.

6.2.2.4 QoS control

The PCEF enforces the authorized QoS for an IP-CAN bearer according to the information received via the Gx interface and depending on the bearer establishment mode.

Only the GBR per bearer is used for resource reservation (e.g. admission control in the RAN). The MBR (per PCC rule / per bearer) is used for rate policing.

For a UE-initiated IP-CAN bearer establishment or modification the PCEF receives the authorized QoS (QCI, ARP, GBR, MBR) for a bearer that the PCEF has identified for the PCRF. The PCEF shall enforce it which may lead to a downgrading or upgrading of the requested bearer QoS.

For a network initiated IP-CAN bearer establishment or modification the PCEF receives the authorized QoS per PCC rule (QCI, ARP, GBR, MBR). For GBR bearers the PCEF should set the bearer's GBR to the sum of the GBRs of all PCC rules that are active and bound to that GBR bearer. For GBR bearers the PCEF should set the bearer's MBR to the sum of the MBRs of all PCC rules that are active and bound to that GBR bearer.

For an IP-CAN that supports non-GBR bearers that have a separate MBR (e.g. GPRS) the PCEF may, before or in connection with activation of the first PCC rule with a certain QCI, receive the authorized QoS (QCI, MBR) for that QCI. The authorized MBR per QCI only applies to non-GBR bearers, and it sets an upper limit for the MBR that the PCEF assigns to a non-GBR bearer with that QCI. In case multiple IP-CAN bearers within the same IP-CAN session are assigned the same QCI, the authorized MBR per QCI applies independently to each of those IP-CAN bearers. The PCRF may change the authorized MBR per QCI at any time. An authorized GBR per QCI shall not be signalled on Gx.

NOTE: The intention of the authorized MBR per QCI is to avoid frequent IP-CAN bearer modifications as PCC rules are dynamically activated and deactivated. That is, the PCEF may choose to assign the authorized MBR per QCI to a non-GBR bearer with that QCI.

6.2.2.5 Application Detection

The PCEF shall detect Start and Stop of the application traffic for the PCC rules used for application detection (i.e. with application identifier) that the PCRF has activated at the PCEF. The PCEF shall report, if the PCRF has subscribed to the event, unless the notification is muted for the specific PCC Rule, to the PCRF:

- For the Start of application event trigger: the application identifier and, when service data flow descriptions are deducible, the application instance identifier and the service data flow descriptions to use for detecting that application traffic with a dynamic PCC rule as defined in clause 6.1.4.
- For the Stop of application event trigger: the application identifier and if the application instance identifier was reported for the Start, also the application instance identifier as defined in the clause 6.1.4.

6.2.3 Application Function (AF)

The Application Function (AF) is an element offering applications that require dynamic policy and/or charging control over the IP-CAN user plane behaviour. The AF shall communicate with the PCRF to transfer dynamic session information, required for PCRF decisions as well as to receive IP-CAN specific information and notifications about IP-CAN bearer level events. One example of an AF is the P-CSCF of the IM CN subsystem.

The AF may receive an indication that the service information is not accepted by the PCRF together with service information that the PCRF would accept. In that case, the AF rejects the service establishment towards the UE. If possible the AF forwards the service information to the UE that the PCRF would accept.

An AF may communicate with multiple PCRFs. The AF shall contact the appropriate PCRF based on either:

- the end user IP Address; and/or
- a UE identity that the AF is aware of.

NOTE 1: By using the end user IP address, an AF is not required to acquire any UE identity in order to provide information, for a specific user, to the PCRF.

In case of private IP address being used for the end user, the AF may send additional PDN information (e.g. PDN ID) over the Rx interface. This PDN information is used by the PCRF for session binding, and it is also used to help selecting the correct PCRF.

For certain events related to policy control, the AF shall be able to give instructions to the PCRF to act on its own, i.e. based on the service information currently available as described in clause 6.1.5.

The AF may use the IP-CAN bearer level information in the AF session signalling or to adjust the IP-CAN bearer level event reporting.

The AF may request the PCRF to report on IP-CAN bearer level events (e.g. the signalling path status for the AF session). The AF shall cancel the request when the AF ceases handling the user.

NOTE 2: The QoS authorization based on incomplete service information is required for e.g. IMS session setup scenarios with available resources on originating side and a need for resource reservation on terminating side.

The AF may request the PCRF to report on the change of type of IP-CAN. In the case of 3GPP IP-CAN, the information of the Radio Access Technology Type (e.g. UTRAN) and the change thereof shall be also reported to the AF, even if the IP-CAN type is unchanged.

The AF may request the PCRF to report any combination of the user location and/or UE Timezone at AF session establishment, modification or termination. For session termination, the communication between the AF and the PCRF shall be kept alive until the PCRF report is received.

NOTE 3: The H-PCRF informs the AF of event triggers that cannot be reported. For detail see Annex L.

To support sponsored data connectivity (see Annex N), the AF may provide the PCRF with the sponsored data connectivity information, including optionally a usage threshold, as specified in clause 5.2.1. The AF may request the PCRF to report events related to sponsored data connectivity.

If the user plane traffic traverses the AF, the AF may handle the usage monitoring and therefore it is not required to provide a usage threshold to the PCRF as part of the sponsored data connectivity information.

6.2.4 Subscription Profile Repository (SPR)

The SPR logical entity contains all subscriber/subscription related information needed for subscription-based policies and IP-CAN bearer level PCC rules by the PCRF. The SPR may be combined with or distributed across other databases in the operator's network, but those functional elements and their requirements for the SPR are out of scope of this document.

NOTE 1: The SPR's relation to existing subscriber databases is not specified in this Release.

The SPR may provide the following subscription profile information (per PDN, which is identified by the PDN identifier):

- Subscriber's allowed services;
- For each allowed service, a pre-emption priority;
- Information on subscriber's allowed QoS, including the Subscribed Guaranteed Bandwidth QoS;
- Subscriber's charging related information (e.g. location information relevant for charging);
- Subscriber's User CSG Information reporting rules;
- Subscriber category;
- Subscriber's usage monitoring related information;
- MPS EPS Priority and MPS Priority Level;
- IMS Signalling Priority;
- Subscriber's profile configuration indicating whether application detection and control can be enabled.
- Spending limits profile containing an indication that policy decisions are based on policy counters available at OCS that has a spending limit associated with it and optionally the list of policy counters.

The SPR may provide the following sponsored data connectivity profile information:

- A list of Application Service Providers and their applications per sponsor identity.

NOTE 2: The sponsored data connectivity profile may be locally configured at the PCRF.

If the IMS Signalling Priority is set, it indicates that the IMS Signalling Bearer and the Default Bearer are assigned ARP appropriate for MPS at the time of the establishment of the PDN connection for IMS, i.e. EPS Attach or PDN Connectivity Request.

6.2.5 Online Charging System

The Online Charging System (OCS) performs online credit control functions as specified in TS 32.240 [3].

The OCS may trigger the PCEF to initiate a IP-CAN bearer service termination at any point in time.

NOTE: As the OCS performs the credit control per charging key basis (and thus has not necessarily the knowledge about the existence of any specific service data flow), it is recommended to use different charging keys for any service data flows that shall not be unintentionally interrupted.

There may be several OCSs in a PLMN. The default OCS addresses (i.e. the primary address and secondary address) shall be locally pre-configured within the PCEF. OCS addresses may also be passed once per IP-CAN session from the PCRF to the PCEF. The OCS addresses provided by the PCRF shall have a higher priority than the pre-configured ones.

6.2.6 Offline Charging System (OFCS)

The Offline Charging System is specified in TS 32.240 [3].

There may be several OFCSs in a PLMN. The default OFCS addresses (i.e. the primary address and secondary address) shall be locally pre-configured within the PCEF. OFCS addresses may also be passed once per IP-CAN session from the PCRF to the PCEF. The addresses provided by the PCRF shall have a higher priority than the pre-configured ones.

6.2.7 Bearer Binding and Event Reporting Function (BBERF)

6.2.7.1 General

The BBERF includes the following functionalities:

- Bearer binding.
- Uplink bearer binding verification.
- Event reporting to the PCRF.
- Sending or receiving IP-CAN-specific parameters, to or from the PCRF.

6.2.7.2 Service data flow detection

The service data flow detection at the BBERF is identical to the detection at PCEF with the following modifications:

- If the service data flow is tunnelled at the BBERF, the BBERF uses information on the mobility protocol tunnelling header provided by the PCRF and the QoS rules to detect the service data flows.

For the uplink direction, the BBERF applies QoS rules with a bearer binding to the bearer that the packet arrived on. The uplink bearer binding verification is successful if there is a QoS rule with a matching uplink SDF filter. The BBERF shall discard packets for which the uplink bearer binding verification fails.

6.2.7.3 QoS Control

The ARP, GBR, MBR and QCI are used by the BBERF in the same way as in the PCEF for resource reservation.

When access network is not utilizing QCI based QoS parameters, the BBERF shall be able to convert a QoS class identifier value to QoS attribute values used in the access network and determine the QoS class identifier value from a set of QoS attribute values used in the access network.

NOTE: The definition of the mapping between QCI and Non 3GPP access specific QoS is outside of scope for 3GPP.

The BBERF controls the QoS that is provided to a combined set of service data flows. BBERF ensures that the resources which can be used by an authorized set of service data flows are within the "authorized resources" specified via the Gxx interface by "authorized QoS". The authorized QoS provides an upper bound on the resources that can be reserved (GBR) or allocated (MBR) for the service data flows.

In order to support the different IP-CAN bearer establishment modes (UE-only or UE/NW), the BBERF shall support the same procedures for handling different IP-CAN bearer establishment modes as specified for the PCEF in clause 6.2.2.1.

6.2.8 User Data Repository (UDR)

The UDR is a functional entity that acts as a single logical repository storing user data. As such it may contain all subscriber/subscription related information needed by the PCRF. In deployment scenarios where the UDR is used it replaces the SPR. The UDR provides a unique reference point to fetch these subscriber/subscription data. This reference point is named Ud. More information on the UDR can be found in TS 23.335 [25].

The SPR data listed in clause 6.2.4 are stored in the UDR, the information model remains unspecified.

6.2.9 Traffic Detection Function (TDF)

The TDF is a functional entity that performs application detection and reporting of detected application and its service data flow description to the PCRF. The TDF supports solicited application reporting and/or unsolicited application reporting.

The TDF shall detect Start and Stop of the application traffic for the ADC rules that the PCRF has activated at the TDF (solicited application reporting) or which are pre-provisioned at the TDF (unsolicited application reporting). The TDF shall report, unless the notification is muted for the specific ADC Rule in case of solicited application reporting, to the PCRF:

- For the Start of application event trigger: the application identifier and, when service data flow descriptions are deducible, the application instance identifier and the service data flow descriptions to use for detecting that application traffic with a dynamic PCC rule as defined in clause 6.1.4.
- For the Stop of application event trigger: the application identifier and if the application instance identifier was reported for the Start, also the application instance identifier as defined in the clause 6.1.4.

For solicited application reporting, the PCRF can request the TDF to also perform enforcement actions and usage monitoring.

For those cases where service data flow description is not possible to be provided by the TDF to the PCRF, the TDF performs:

- Gating;
- Redirection;
- Bandwidth limitation.

for the detected applications.

For those cases where service data flow description is provided by the TDF to the PCRF the actions resulting of application detection may be performed by the PCEF as part of the charging and policy enforcement per service data flow as defined in this document or may be performed by the TDF.

NOTE: The PCEF can be enhanced with application detection and control feature as specified in clause 6.2.2.5.

The TDF shall support usage monitoring as specified in clause 4.4 and the usage reporting functions as specified in clause 6.2.2.3 for the PCEF.

If there are required events which cannot be monitored in the TDF (e.g. related to the location changes), the TDF shall request the information about these Event Triggers from the PCRF using either:

- The IP-CAN Session Establishment procedure, as defined in clause 7.2, or
- The PCEF initiated IP-CAN Session Modification procedure, as defined in clause 7.4.1, or
- In the response to a PCRF initiated IP-CAN Session Modification, as defined in clause 7.4.2, or
- Within the Update of the subscription information in the PCRF procedure, as defined in clause 7.5.

For unsolicited application reporting, the TDF performs only application detection and reporting functionality but neither enforcement actions nor usage monitoring. The TDF should handle each IPv4 address and IPv6 prefix, assuming the max prefix length used in the access network, within a separate TDF session. The PCRF shall, if needed, correlate TDF sessions that correspond to the same IP-CAN session.

6.3 Policy and charging control rule

6.3.1 General

The Policy and charging control rule (PCC rule) comprises the information that is required to enable the user plane detection of, the policy control and proper charging for a service data flow. The packets detected by applying the service data flow template of a PCC rule form a service data flow.

Two different types of PCC rules exist: Dynamic rules and predefined rules. The dynamic PCC rules are provisioned by the PCRF via the Gx reference point, while the predefined PCC rules are directly provisioned into the PCEF and only referenced by the PCRF. The usage of predefined PCC rules for QoS control is possible if the BBF remains in the PCEF during the lifetime of an IP-CAN session. In addition, predefined PCC rules may be used in a non-roaming situation and if it can be guaranteed that corresponding predefined QoS rules are configured in the BBF and activated along with the predefined PCC rules.

NOTE 1: The procedure for provisioning predefined PCC rules is out of scope for this TS.

NOTE 2: There may be another type of predefined rules that are not explicitly known in the PCRF and not under the control of the PCRF. The operator may define such predefined PCC rules, to be activated by the PCEF on one IP-CAN bearer within the IP-CAN session. The PCEF may only activate such predefined PCC rules if there is no UE provided traffic mapping information related to that IP-CAN bearer. The IP-CAN session termination procedure deactivates such predefined PCC rules.

There are defined procedures for activation, modification and deactivation of PCC rules (as described in clause 6.3.2). The PCRF may activate, modify and deactivate a PCC rule at any time, over the Gx reference point. However, the modification procedure is applicable to dynamic PCC rules only.

Each PCC rule shall be installed for a single IP-CAN bearer only, i.e. PCC rules containing completely identical information shall receive different PCC rule identifiers (an exception are predefined PCC rules that contain only uplink service data flow filters and which are known to the PCRF, see clause 6.3.2).

The operator defines the PCC rules.

Table 6.3 lists the information contained in a PCC rule, including the information name, the description and whether the PCRF may modify this information in a dynamic PCC rule which is active in the PCEF. The Category field indicates if a certain piece of information is mandatory or not for the construction of a PCC rule, i.e. if it is possible to construct a PCC rule without it.

Table 6.3: The PCC rule information

Information name	Description	Category	PCRF permitted to modify for a dynamic PCC rule in the PCEF
Rule identifier	Uniquely identifies the PCC rule, within an IP-CAN session. It is used between PCRF and PCEF for referencing PCC rules.	Mandatory	no
Service data flow detection	*This clause defines the method for detecting packets belonging to a service data flow.*		
Precedence	Determines the order, in which the service data flow templates are applied at service data flow detection, enforcement and charging. (NOTE 9).	Conditional (NOTE 13)	yes
Service data flow template	Either a list of service data flow filters or an application identifier that references the corresponding application detection filter for the detection of the service data flow.	Mandatory (NOTE 7)	Conditional (NOTE 12)
Mute for notification	Defines whether application's start or stop notification is to be muted.	Conditional (NOTE 8)	No
Charging	*This clause defines identities and instructions for charging and accounting that is required for an access point where flow based charging is configured*		
Charging key	The charging system (OCS or OFCS) uses the charging key to determine the tariff to apply to the service data flow.		yes
Service identifier	The identity of the service or service component the service data flow in a rule relates to.		yes
Sponsor Identifier	An identifier, provided from the AF which identifies the Sponsor, used for sponsored flows to correlate measurements from different users for accounting purposes.	Conditional (NOTE 6)	yes
Application Service Provider Identifier	An identifier, provided from the AF which identifies the Application Service Provider, used for sponsored flows to correlate measurements from different users for accounting purposes.	Conditional (NOTE 6)	yes
Charging method	Indicates the required charging method for the PCC rule. Values: online, offline or neither.	Conditional (NOTE 4)	no

Information name	Description	Category	PCRF permitted to modify for a dynamic PCC rule in the PCEF
Measurement method	Indicates whether the service data flow data volume, duration, combined volume/duration or event shall be measured. This is applicable to reporting, if the charging method is online or offline. Note: Event based charging is only applicable to predefined PCC rules and PCC rules used for application detection filter (i.e. with an application identifier).		yes
Application Function Record Information	An identifier, provided from the AF, correlating the measurement for the Charging key/Service identifier values in this PCC rule with application level reports.		no
Service identifier level reporting	Indicates that separate usage reports shall be generated for this Service identifier. Values: mandated or not required		Yes
Policy control	*This clause defines how the PCEF shall apply policy control for the service data flow.*		
Gate status	The gate status indicates whether the service data flow, detected by the service data flow template, may pass (Gate is open) or shall be discarded (Gate is closed) at the PCEF.		Yes
QoS class identifier	Identifier for the authorized QoS parameters for the service data flow. Values: see NOTE 1.	Conditional (NOTE 2)	Yes
UL-maximum bitrate	The uplink maximum bitrate authorized for the service data flow	Conditional (NOTE 3)	Yes
DL-maximum bitrate	The downlink maximum bitrate authorized for the service data flow	Conditional (NOTE 3)	Yes
UL-guaranteed bitrate	The uplink guaranteed bitrate authorized for the service data flow		Yes
DL-guaranteed bitrate	The downlink guaranteed bitrate authorized for the service data flow		Yes
Redirect	Redirect state of the service data flow (enabled/disabled)	Conditional (NOTE 10)	Yes
Redirect Destination	Controlled Address to which the service data flow is redirected when redirect is enabled	Conditional (NOTE 11)	Yes

Information name	Description	Category	PCRF permitted to modify for a dynamic PCC rule in the PCEF
ARP	The Allocation and Retention Priority for the service data flow consisting of the priority level, the pre-emption capability and the pre-emption vulnerability	Conditional (NOTE 5)	Yes
PS to CS session continuity	Indicates whether the service data flow is a candidate for vSRVCC.	Conditional	No
Access Network Information Reporting	This clause describes access network information to be reported for the PCC rule when the corresponding bearer is established, modified or terminated.		
User Location Report	The serving cell of the UE is to be reported. When the corresponding bearer is deactivated, and if available, information on when the UE was last known to be in that location is also to be reported.		Yes
UE Timezone Report	The time zone of the UE is to be reported.		Yes
Usage Monitoring Control	*This clause describes identities required for Usage Monitoring Control.*		
Monitoring key	The PCRF uses the monitoring key to group services that share a common allowed usage.		Yes

NOTE 1: The QoS class identifier is scalar and accommodates the need for differentiating QoS in all types of 3GPP IP-CAN. The value range is expandable to accommodate additional types of IP-CAN.
NOTE 2: The QoS class identifier is mandatory when the bearer binding is allocated to the PCEF.
NOTE 3: Mandatory when the QoS class identifier is of Resource Type GBR. Used to activate policy control on SDF level at the PCEF.
NOTE 4: Mandatory if there is no default charging method for the IP-CAN session.
NOTE 5: Mandatory when policy control on SDF level applies unless otherwise stated in an access-specific Annex.
NOTE 6: Applicable for sponsored data connectivity.
NOTE 7: Either service data flow filter(s) or application identifier shall be defined per each rule. application identifier can only be used for PCEF enhanced with ADC.
NOTE 8: Optional and applicable only if application identifier exists within the rule.
NOTE 9: For PCC rules based on an application detection filter, the precedence is only relevant for the enforcement, i.e. when multiple PCC rules overlap, only the enforcement, reporting of application starts and stops, monitoring, and charging actions of the PCC rule with the highest precedence shall be applied.
NOTE 10: Optional and applicable only if application identifier exists within the rule.
NOTE 11: If Redirect is enabled.
NOTE 12: YES, in case the service data flow template consists of a set of service data flow filters. NO in case the service data flow template consists of an application identifier.
NOTE 13: The Precedence is mandatory for PCC rules with SDF template containing SDF filter(s). For dynamic PCC rules with SDF template containing an application identifier, the precedence is either preconfigured in PCEF or provided in the PCC rule from PCRF.

The *Rule identifier* shall be unique for a PCC rule within an IP-CAN session. A dynamically provided PCC rule that has the same Rule identifier value as a predefined PCC rule shall replace the predefined rule within the same IP-CAN session.

The *Service data flow template* may comprise any number of Service data flow filters. A Service data flow filter contains information for matching user plane packets. A Service data flow filter, provided from the PCRF, contains information elements as described in clause 6.2.2.2. The Service data flow template filtering information within an activated PCC rule is applied at the PCEF to identify the packets belonging to a particular service data flow.

NOTE 3: Predefined PCC rules may include service data flow filters, which support extended capabilities, including enhanced capabilities to identify events associated with application protocols.

Alternatively, the Service data flow template consists of an *application identifier* that references an application detection filter that is used for matching user plane packets. The application identifier is also identifying the application, for which the rule applies. The same application identifier value can occur in more than one PCC rule with the following restrictions:

- The same application identifier value can be used for a dynamic PCC rule and one or multiple predefined PCC rules. If so, the PCRF shall ensure that there is at most one PCC rule active per application identifier value at any time.

The *Mute for notification* defines whether notification to the PCRF of application's starts or stops shall be muted. Absence of this parameter means that start/stop notifications shall be sent.

The *Precedence* defines in what order the activated PCC rules within the same IP-CAN session shall be applied at the PCEF for service data flow detection. When a dynamic PCC rule and a predefined PCC rule have the same precedence, the dynamic PCC rule takes precedence. For dynamic PCC rules that contain an application identifier, the Precedence shall be either preconfigured at the PCEF or provided dynamically by the PCRF within the PCC Rules.

NOTE 4: The operator shall ensure that overlap between the predefined PCC rules can be resolved based on precedence of each predefined PCC rule in the PCEF. The PCRF shall ensure that overlap between the dynamically allocated PCC rules can be resolved based on precedence of each dynamically allocated PCC rule. Further information about the configuration of the PCC rule precedence is described in Annex G.

NOTE 5: Whether precedence for dynamic PCC rules that contain an application identifier is preconfigured in PCEF or provided in the PCC rule from the PCRF depends on network configuration.

For downlink packets all the service data flow templates, activated for the IP-CAN session shall be applied for service data flow detection and for the mapping to the correct IP-CAN bearer. For uplink packets the service data flow templates activated on their IP-CAN bearer shall be applied for service data flow detection.

The *Charging key* is the reference to the tariff for the service data flow. Any number of PCC Rules may share the same charging key value. The charging key values for each service shall be operator configurable.

NOTE 6: Assigning the same Charging key for several service data flows implies that the charging does not require the credit management to be handled separately.

NOTE 7: If the IP flow mobility is supported and the tariff depends on what access network is in use for the service data flow, then a separate Charging key can be allocated for each access network, and the PCRF can set the Charging key in accordance with the access network in use.

The *Service identifier* identifies the service. PCC Rules may share the same service identifier value. The service identifier provides the most detailed identification, specified for flow based charging, of a service data flow.

NOTE 8: The PCC rule service identifier need not have any relationship to service identifiers used on the AF level, i.e. is an operator policy option.

The *Sponsor Identifier* indicates the (3rd) party organization willing to pay for the operator's charge for connectivity required to deliver a service to the end user.

The *Application Service Provider Identifier* indicates the (3rd) party organization delivering a service to the end user.

The *Charging method* indicates whether online charging, offline charging, or both are required or the service data flow is not subject to any end user charging. If the charging method identifies that the service data flow is not subject to any end user charging, a Charging key shall not be included in the PCC rule for that service data flow, along with other charging related parameters. If the charging method is omitted the PCEF shall apply the default charging method as determined at IP-CAN session establishment (see clause 6.4). The Charging method is mandatory if there is no default charging method for the IP-CAN session.

The *Measurement method* indicates what measurements apply to charging for PCC rule.

The *Service Identifier Level Reporting* indicates whether the PCEF shall generate reports per Service Identifier. The PCEF shall accumulate the measurements from all PCC rules with the same combination of Charging key/Service identifier values in a single report.

The *Application function record information* identifies an instance of service usage. A subsequently generated usage report, generated as a result of the PCC rule, may include the Application function record information, if available. The Application Function Record Information may contain the AF Charging Identifier and/or the Flow identifiers. The report is however not restricted to include only usage related to the Application function record information reported, as the report accumulates the usage for all PCC rules with the same combination of Charging key/Service identifier values. If exclusive charging information related to the Application function record information is required, the PCRF shall provide a service identifier, not used by any other PCC rule of the IP-CAN session at this point in time, for the AF session.

NOTE 9: For example, the PCRF may be configured to maintain a range of service identifier values for each service which require exclusive per instance charging information. Whenever a separate counting or credit management for an AF session is required, the PCRF shall select a value, which is not used at this point in time, within that range. The uniqueness of the service identifier in the PCEF ensures a separate accounting/credit management while the AF record information identifies the instance of the service.

The *Gate* indicates whether the PCEF shall let a packet identified by the PCC rule pass through (gate is open) the PCEF, or the PCEF shall discard (gate is closed) the packet.

NOTE 10: A packet, matching a PCC Rule with an open gate, may be discarded due to credit management reasons.

The *QoS Class Identifier* for the service data flow. The QoS class identifier represents the QoS parameters for the service data flow. The PCEF maintains the mapping between QoS class identifier and the QoS concept applied within the specific IP-CAN. The bitrate information is separate from the QoS class identifier value.

The bitrates indicate the authorized bitrates at the IP packet level of the SDF, i.e. the bitrates of the IP packets before any IP-CAN specific compression or encapsulation.

The *UL maximum-bitrate* indicates the authorized maximum bitrate for the uplink component of the service data flow.

The *DL maximum-bitrate* indicates the authorized maximum bitrate for the downlink component of the service data flow.

The *UL guaranteed-bitrate* indicates the authorized guaranteed bitrate for the uplink component of the service data flow.

The *DL guaranteed-bitrate* indicates the authorized guaranteed bitrate for the downlink component of the service data flow.

The 'Maximum bitrate' is used for enforcement of the maximum bit rate that the SDF may consume, while the 'Guaranteed bitrate' is used by the PCEF to determine resource allocation.

The *Redirect* indicates whether the uplink part of the service data flow should be redirected to a controlled address.

The *Redirect Destination* indicates the target redirect address when Redirect is enabled.

The *Allocation/Retention Priority* indicates the priority of allocation and retention of the service data flow. The ARP contains information about the priority level, the pre-emption capability and the pre-emption vulnerability. The Allocation/Retention Priority resolves conflicts of demands for network resources.

The *PS to CS session continuity* is present if the service data flow is a candidate for vSRVCC according to TS 23.216 [28].

The access network information reporting parameters (*User Location Report, UE Timezone Report*) instruct the PCEF about what information to forward to the PCRF when the PCC rule is activated, modified or removed.

The *Monitoring Key* is the reference to a resource threshold. Any number of PCC Rules may share the same monitoring key value. The monitoring key values for each service shall be operator configurable.

6.3.2 Policy and charging control rule operations

Policy and charging control rule operations consist of activation, modification and de-activation of PCC rules.

Activation of a dynamic PCC rule provides the PCC rule information to the PCEF via the Gx reference point.

Activation of a predefined PCC rule provides an identifier of the relevant PCC rule to the PCEF via the Gx reference point.

Activation of a predefined PCC rule, not known in the PCRF, may be done by the PCEF based on operator policy. The PCEF may only activate such predefined PCC rule if there are no UE provided traffic mapping information related to the IP-CAN bearer. Further restrictions regarding the usage of predefined PCC rules are described in clause 6.3.1.

An active PCC rule means that:

- the service data flow template shall be used for service data flow detection;
- the service data flow template shall be used for mapping of downlink packets to the IP-CAN bearer determined by the bearer binding;
- the service data flow template shall be used for service data flow detection of uplink packets on the IP-CAN bearer determined by the bearer binding;
- usage data for the service data flow shall be recorded (further details can be found in clause 6.1.2 Reporting and clause 6.1.3 Credit Management);
- policies associated with the PCC rule, if any, shall be invoked;
- for service data flow detection with an application detection filter, the start or the stop of the application traffic is reported to the PCRF, if applicable and requested by the PCRF. In that case, the notification for Start may include service data flow informationfilters (if possible to provide) and the application instance identifier associated with the service data flow filters.

For PCC Rules that contain an application identifier (i.e. that refers to an application detection filter) the bearer binding may apply to multiple bearers in the uplink.

NOTE 1: Since PCC rules with application detection filters cannot be used to generate traffic mapping information for the UE, the application detection may need to inspect traffic on multiple bearers under consideration of the enforcement carried out based on uplink bearer binding.

A predefined PCC rule is known at least, within the scope of one access point.

NOTE 2: The same predefined PCC rule can be activated for multiple IP-CAN bearers in multiple IP-CAN sessions.

A predefined PCC rule that contains downlink service data flow filters can only be activated once per IP-CAN session. A predefined PCC rule that contains only uplink service data flow filters can be activated for multiple IP-CAN bearers of the same IP-CAN session (deactivation of such a predefined PCC rule would remove this PCC rule from every IP-CAN bearer).

The PCRF may, at any time, modify an active, dynamic PCC rule.

The PCRF may, at any time, deactivate an active PCC rule in the PCEF via the Gx reference point. At IP-CAN bearer termination all active PCC rules on that bearer are deactivated without explicit instructions from the PCRF to do so.

Policy and charging control rule operations can be also performed in a deferred mode. A PCC rule may have either a single deferred activation time, or a single deferred deactivation time or both.

A PCC rule with only a deferred activation time shall be inactive until that time. A PCC rule with only a deferred deactivation time shall be active until that time. When the rule activation time occurs prior to the rule deactivation time, the rule is inactive until the activation and remains active until the deactivation time occurs. When the rule deactivation time occurs prior to the rule activation time, the rule is initially active until the deactivation time, then remains inactive until the activation time, and then becomes active again. An inactive PCC rule, that has not been activated yet, is still considered to be installed, and may be removed by the PCRF.

The PCRF may modify a currently installed PCC rule, including setting, modifying or clearing its deferred activation and/or deactivation time. When modifying a dynamic PCC rule with a prior and/or new deferred activation and/or deactivation time, the PCRF shall provide all attributes of that rule, including attributes that have not changed.

NOTE 3: In this case, the PCRF omission of an attribute that has a prior value will erase that attribute from the rule.

Deferred activation and deactivation of PCC rules can only be used for PCC rules that belong to the IP-CAN bearer without traffic mapping information.

NOTE 4: This limitation prevents dependencies on the signalling of changed traffic mapping information towards the UE.

Deferred modification of PCC rules shall not be applied for changes of the QoS or service data flow filter information of PCC rules.

6.4 IP-CAN bearer and IP-CAN session related policy information

The purpose of the IP-CAN bearer and IP-CAN session related policy information is to provide policy and charging control related information that is applicable to a single IP-CAN bearer or the whole IP-CAN session respectively. The PCRF provides the IP-CAN bearer and IP-CAN session related policy information to the PCEF and BBERF (if applicable) using the PCC rule and QoS rule (if applicable) provision procedure. The IP-CAN bearer related policy information may be provided together with rules or separately.

Table 6.4 lists the PCC related IP-CAN bearer and IP-CAN session related policy information.

Table 6.4: PCC related IP-CAN bearer and IP-CAN session related policy information

Attribute	Description	PCRF permitted to modify the attribute	Scope
Charging information (NOTE 2)	Defines the containing OFCS and/or OCS addresses.	No	IP-CAN session
Default charging method (NOTE 2)	Defines the default charging method for the IP-CAN session.	No	IP-CAN session
Event trigger	Defines the event(s) that shall cause a re-request of PCC rules for the IP-CAN bearer.	Yes	IP-CAN session
Authorized QoS per bearer (UE-initiated IP-CAN bearer activation/modification) (NOTE 1)	Defines the authorised QoS for the IP-CAN bearer (QCI, GBR, MBR).	Yes	IP-CAN bearer
Authorized MBR per QCI (network initiated IP-CAN bearer activation/modification) (NOTE 1) (NOTE 3)	Defines the authorised MBR per QCI.	Yes	IP-CAN session
Revalidation time limit	Defines the time period within which the PCEF shall perform a PCC rules request.	Yes	IP-CAN session

NOTE 1: Depending on the bearer establishment mode; only one Authorized QoS information has to be used.
NOTE 2: These attributes should not be provided to BBERF.
NOTE 3: This attribute is only applicable when the IP-CAN supports non-GBR bearers that have a separate MBR (e.g. for GPRS).

Upon the initial interaction with the PCEF, the PCRF may provide Charging information containing OFCS and/or OCS addresses to the PCEF defining the offline and online charging system addresses respectively. These shall override any possible predefined addresses at the PCEF. If received by the PCEF, it supersedes the Primary OFCS/OCS address and Secondary OFCS/OCS address in the charging characteristics profile.

Upon the initial interaction with the PCEF, the PCRF may provide Default charging method indicating what charging method shall be used in the IP-CAN session for every PCC rule where the charging method identifier is omitted, including predefined PCC rules that are activated by the PCEF. If received by the PCEF, it supersedes the Default charging method in the charging characteristics profile.

Upon every interaction with the ERF, the PCRF may provide event triggers for the IP-CAN session. Event triggers are used to determine which IP-CAN bearer modification causes the ERF to re-request PCC rules. The triggers are listed in clause 6.1.4.

The semantics of the authorized QoS per bearer (UE-initiated IP-CAN bearer activation/modification) and the authorized MBR per QCI (network initiated IP-CAN bearer activation/modification) are captured in clause 6.2.2.4.

The Revalidation time limit defines the time period within which the PCEF shall trigger a request for PCC rules for an established IP-CAN session.

6.4a TDF session related policy information

The purpose of the TDF session related information is to provide information that is applicable to the whole TDF session. The PCRF provides the TDF session related information to the TDF (if applicable) using ADC rule provision procedure.

Table 6.4a lists the TDF session related policy information.

Table 6.4a: TDF session related policy information

Attribute	Description	PCRF permitted to modify the attribute	Scope
Event trigger	Defines the event(s) that shall cause a re-request of ADC rules for the TDF session.	Yes	TDF session
ADC Revalidation time limit	Defines the time period within which the TDF shall perform an ADC rules request.	Yes	TDF session

Upon every interaction with the TDF, the PCRF may provide event triggers for the TDF session. Event triggers are used to determine which event causes the TDF to re-request ADC rules. The triggers applicable for the TDF are listed in clause 6.1.4.

The ADC Revalidation time limit defines the time period within which the TDF shall trigger a request for ADC rules for an established TDF session.

6.5 Quality of Service Control rule

6.5.1 General

The Quality of Service control rule (QoS rule) comprises the information that is required to enable the user plane detection and the QoS control for a service data flow in the BBERF. The packets detected by applying the service data flow template of a QoS rule are designated a service data flow.

NOTE 1: The BBERF only supports service data flow templates consisting of a set of service data flow filters.

The PCRF shall ensure that each PCC rule in the PCEF has a corresponding active QoS rule in the BBERF. The QoS rule shall contain the same service data flow template, precedence and the QoS information as the corresponding PCC rule.

NOTE 2: During the course of a BBERF change procedure the BBERF might not be able to maintain the correspondence throughout the procedure. The post-condition for the procedure shall however be that corresponding PCC and QoS rules are active at the PCEF and BBERF.

There are defined procedures for activation, modification and deactivation of QoS rules (as described in clause 6.5.2). The PCRF may activate, modify and deactivate a QoS rule over the Gxx reference point.

The QoS rules are derived from the PCC rules.

Table 6.5 lists the information contained in a QoS rule, including the information name and whether the PCRF may modify this information in a QoS rule which is active in the BBERF. For the IE description, refer to clause 6.3.1. The Category field indicates if a certain piece of information is mandatory or not for the construction of a QoS rule, i.e. if it is possible to construct a QoS rule without it.

Table 6.5: The QoS rule information

Information name	Category	PCRF permitted to modify for an active QoS rule in the BBERF
Rule identifier (NOTE 1)	Mandatory	No
Service data flow detection		
Precedence	Mandatory	Yes
Service data flow template	Mandatory	Yes
QoS control		
QoS class identifier (NOTE 2)	Mandatory	Yes
UL-maximum bitrate	Conditional (NOTE 3)	Yes
DL-maximum bitrate	Conditional (NOTE 3)	Yes
UL-guaranteed bitrate	Conditional (NOTE 3)	Yes
DL-guaranteed bitrate	Conditional (NOTE 3)	Yes
ARP	Conditional (NOTE 3)	Yes
PS to CS session continuity	Conditional	No
Access Network Information Reporting		
User Location Report	Conditional	Yes
UE Timezone Report	Conditional	Yes

NOTE 1: The Rule-Identifier uniquely defines an active QoS rule for a certain BBERF within the scope of a UE.
NOTE 2: The QoS class identifier is scalar and accommodates the need for differentiating QoS in all types of IP-CAN. The value range is expandable to accommodate operator specific policies.
NOTE 3: If present in the corresponding PCC rule.

6.5.2 Quality of Service control rule operations

QoS control rule operations consist of activation, modification and de-activation of QoS rules.

Activation of a dynamic QoS rule provides the QoS rule information to the BBERF via the Gxx reference point.

An active QoS rule means that:

- the service data flow template shall be used for service data flow detection;
- the service data flow template shall be used for mapping of downlink packets to the IP-CAN bearer determined by the bearer binding;
- the service data flow template shall be used for service data flow detection of uplink packets on the IP-CAN bearer determined by the bearer binding;
- QoS procedures associated with the QoS rule, if any, shall be invoked.

The PCRF may, at any time, modify an active QoS rule.

The PCRF may, at any time, deactivate an active QoS rule in the BBERF via the Gxx reference point. At IP-CAN bearer termination all active QoS rules on that bearer are deactivated without explicit instructions from the PCRF to do so.

6.6 Usage Monitoring Control specific information

6.6.1 General

The Usage Monitoring Control information comprises the information that is required to enable user plane monitoring of resources for individual applications/services, groups of applications/services, for an IP-CAN session or for a TDF session.

Table 6.6: Usage Monitoring Control related information

Information name	Description	Category	Scope
Monitoring key	The PCRF uses the monitoring key to group services that share a common allowed usage.	Mandatory	IP-CAN session, TDF session
Volume threshold (NOTE 1)	Defines the traffic volume value after which the PCEF or the TDF shall report usage to the PCRF for this monitoring key.	Optional	Monitoring key
Monitoring time	Defines the time at which the PCEF or the TDF shall reapply the Volume Threshold.	Optional	Monitoring Key
Subsequent Volume threshold	Defines the traffic volume value after which the PCEF or the TDF shall report usage to the PCRF for this Monitoring key for the period after the Monitoring time.	Optional, Conditional (NOTE 2)	Monitoring Key
NOTE 1: This attribute is also used by the PCEF, e.g. during IP-CAN session termination, to inform the PCRF about the resources that have been consumed by the UE. NOTE 2: This attribute is applicable in presence of Monitoring Time only.			

The *Monitoring Key* is the reference to a resource threshold. Any number of PCC/ADC Rules may share the same monitoring key value. The monitoring key values for each service shall be operator configurable.

It shall also be possible for an operator to use the *Monitoring Key* parameter to indicate usage monitoring on an IP-CAN session level at the PCEF or on a TDF session level at the TDF.

The *Volume threshold* indicates the overall user traffic volume value after which the PCEF or the TDF shall report the Usage threshold reached trigger to the PCRF.

The *Monitoring time* indicates the time at which the PCEF or the TDF shall store the accumulated usage information.

The *Subsequent Volume threshold* indicates the overall user traffic volume value measured after Monitoring time, after which the PCEF or the TDF shall report the Usage threshold reached trigger to the PCRF.

6.6.2 Usage Monitoring Control operations

Usage monitoring on IP-CAN session, TDF session or monitoring key level is active in the PCEF or TDF provided that certain conditions are met. The conditions for continued monitoring on session level are:

- For IP-CAN session level monitoring at the PCEF, an IP-CAN session is active and a volume threshold value for the IP-CAN session has been provided.

- For TDF session level monitoring at the TDF, a TDF session is active and a volume threshold value has been provided.

For usage monitoring on Monitoring key level at the PCEF or the TDF the following conditions are applicable:

- A volume threshold has been provided for a Monitoring key to the PCEF and there is at least one PCC rule activated for the IP-CAN session that is associated with that Monitoring key.

- A volume threshold has been provided for a Monitoring key to the TDF and there is at least one ADC rule at the TDF activated for the TDF session that is associated with that Monitoring key.

NOTE: The PCRF is recommended to use monitoring so that the same traffic is not monitored by both PCC rules and ADC rules. This avoids double counting.

6.7 IP flow mobility Routing rule

6.7.1 General

The routing rule comprises the information that is required for the PCRF to install the QoS rules for a service data flow at the right BBERF in flow mobility scenarios. The PCRF relies on the IP flow mobility routing information contained in the IP flow mobility routing rule to the applicable BBERF for each PCC/QoS rule. The IP flow mobility routing rules are provided by the PCEF to the PCRF during IP-CAN session establishment or modification.

The PCEF derives IP flow mobility routing rules based on flow binding information received from the UE as described in TS 23.261 [23].

Table 6.7 lists the information contained in a routing rule, including the information name, the description and whether the PCEF may modify this information in an updated version of the rule. The Category field indicates if a certain piece of information is mandatory or not.

Table 6.7: The routing rule information

Information name	Description	Category	PCEF permitted to modify in an update
Rule identifier	Uniquely identifies the routing rule within an IP-CAN session. It is assigned by the PCEF.	Mandatory	No
Routing information	*This clause defines the method for detecting packets belonging to a flow and the route for the flow.*		
Precedence	Determines the order, in which the routing filters are applied.	Mandatory	Yes
Packet filter	A list of packet filters for the detection of IP flows.	Mandatory	Yes
IP flow mobility Routing Address	The IP flow mobility Routing Address that the matching IP flows use.	Mandatory	Yes

The *Rule identifier* shall be unique for a routing rule within an IP-CAN session. It is assigned by the PCEF.

The *Precedence* defines in what order the routing rules is used by the PCRF to determine where to route a service data flow. The Precedence is derived from the priority included in the Binding Update as specified in TS 23.261 [23].

The *Packet filter* may comprise any number of packet filters, containing information for matching service data flows. The format of the packet filters is the same as the service data flow filter described in clause 6.2.2.2. A default packet filter can be specified by using wild card filter.

The *IP flow mobility Routing Address* identifies the IP address to be used for all service data flows matching the packet filters specified for this routing rule. The IP flow mobility Routing Address can be equal to the care-of address, or to the UE IP address (home address) in case of home link operations.

6.7.2 Routing rule operations

IP flow mobility routing rule operations consist of installation, modification and removal of routing rules.

During installation of a routing rule, the PCEF provides the routing rule information to the PCRF via the Gx reference point. The PCRF uses all the installed routing rules related to an IP-CAN Session to select BBERF for any service data flow related for that IP-CAN Session.

The PCEF may, at any time, modify or remove an installed routing rule based on updated flow binding information received from the UE as described in TS 23.261 [23].

6.8 Application Detection and Control Rule

6.8.1 General

The Application Detection and Control rule (ADC rule) comprises the information that is required in order to:

- identify the rule;
- detect the Start and Stop of traffic for a certain application;
- apply enforcement actions for the application traffic detected by the rule.

ADC rules definitions are assumed to be directly provisioned into the TDF and referenced by the PCRF with the ADC Rule identifier.

NOTE 1: The method to perform the detection, in particular for the Start and Stop, may extend beyond the IP header and is out of scope for this document.

Two types of ADC rules exist: Predefined and dynamic ADC rules. A predefined ADC rule is constant and shall not be changed. For a dynamic ADC rule, some parameters can be provided and modified by the PCRF as defined in Table 6.8.

There are defined procedures for activation, modification and deactivation of ADC rules (as described in clause 6.8.2). The PCRF may activate, modify and deactivate an ADC rule at any time. The modification procedure is applicable to dynamic ADC rules only.

The operator defines the ADC rules.

Table 6.8 lists the information contained in an ADC rule that can be exchanged over the Sd reference point, including the information element name, the description and whether the PCRF may modify this information in a dynamic ADC rule which is active in the TDF. The Category field indicates if a certain piece of information is mandatory or not for the construction of an ADC rule, i.e. if it is possible to construct an ADC rule without it.

Table 6.8: The Application Detection and Control rule information

Information name	Description	Category	PCRF permitted to modify for a dynamic ADC rule
ADC Rule identifier	Uniquely identifies the ADC rule, within a TDF session. It is used between PCRF and TDFfor referencing ADC rules.	Mandatory	No
Application detection	*Defines the detection and the application name.*		
Application identifier (NOTE 2)	References the corresponding application detection filter for the detection of the service data flow. References the corresponding application, for which the rule applies.	Mandatory	No
Mute for notification	Defines whether application's start or stop notification is to be muted.	Optional	No
Usage Monitoring Control	*This clause describes identities required for Usage Monitoring Control.*		
Monitoring key	The PCRF uses the monitoring key to group applications that share a common allowed usage.	Optional	Yes
Enforcement control	*Defines how the TDF shall apply enforcement actions for the detected application traffic.*		
Gate status	The gate status indicates whether the detected application may pass (Gate is open) or shall be discarded (Gate is closed) at the TDF.	Optional	Yes
UL-maximum bit rate	The uplink maximum bit rate authorized for the application traffic	Optional	Yes
DL-maximum bit rate	The downlink maximum bit rate authorized for the application traffic	Optional	Yes
Redirect	Redirect state of detected application traffic (enabled/disabled)	Optional	Yes
Redirect Destination	Controlled Address to which detected application traffic should be redirected when redirect is enabled	Conditional (NOTE 1)	Yes
NOTE 1: If Redirect is enabled. NOTE 2: For every ADC rule this information is pre-configured in the TDF.			

The *ADC Rule identifier* shall be unique for an ADC rule within a TDF session.

NOTE 2: The PCRF has to ensure that there is no dynamically provided ADC rule that has the same Rule identifier value as any of the predefined ADC rules.

The *application identifier* references the corresponding application detection filter that is used for matching user plane packets. It is also used for identifying the application, for which the rule applies, during reporting to the PCRF. The same application identifier value can occur in more than one ADC rule. If so, the PCRF shall ensure that there is at most one ADC rule active per application identifier value at any time.

NOTE 3: The same application identifier value could be used for a dynamic ADC rule and a predefined ADC rule or for multiple predefined ADC rules.

The *Mute for notification* defines whether notification of application's start or stop shall be muted to the PCRF. Absence of this parameter means that start/stop notifications shall be sent.

The *Monitoring Key* is the reference to a resource threshold. Any number of ADC Rules may share the same monitoring key value. The monitoring key values for each application shall be operator configurable.

The *Gate status* indicates whether the TDF shall let detected application traffic pass through (gate is open) the TDF or the TDF shall discard (gate is closed) the application traffic.

The *UL maximum-bitrate* indicates the authorized maximum bitrate for the uplink component of the detected application traffic.

The *DL maximum-bitrate* indicates the authorized maximum bitrate for the downlink component of the detected application traffic.

The *Redirect* indicates whether the uplink part of the detected application traffic should be redirected to a controlled address.

The *Redirect Destination* indicates the target redirect address when *Redirect* is enabled.

6.8.2 Application Detection and Control rule operations

Application Detection and Control rule operations apply to solicited reporting and consist of activation, modification and deactivation of ADC rules.

Activation: The PCRF provides the ADC Rule identifier to the TDF. The PCRF may provide data for usage monitoring and enforcement control for a dynamic ADC rule.

An active ADC rule means that:

- The application traffic, matching the corresponding application, can be detected; and
- Start or stop of application traffic is reported to the PCRF, if applicable and requested by the PCRF; the notification for Start may include service data flow filters, if possible to provide; and the application instance identifier associated with the service data flow filter; and
- Monitoring and enforcement, as specified within the rule, is applied.

The PCRF may, at any time, modify an active, dynamic ADC rule.

The PCRF may, at any time, deactivate an active ADC rule. The TDF session termination shall deactivate all ADC rules for that IP-CAN session.

Application Detection and Control rule activation/deactivation operations can also be performed in a deferred mode. An ADC rule may have either a single deferred activation time, or a single deferred deactivation time or both.

An ADC rule with only a deferred activation time shall be inactive until that time. An ADC rule with only a deferred deactivation time shall be active until that time. When the rule activation time occurs prior to the rule deactivation time, the rule is inactive until the activation and remains active until the deactivation time occurs. When the rule deactivation time occurs prior to the rule activation time, the rule is initially active until the deactivation time, then remains inactive until the activation time, and then becomes active again. An inactive ADC rule, that has not been activated yet, is still considered to be installed, and may be removed by the PCRF.

The PCRF may modify a currently installed dynamic ADC rule, including setting, modifying or clearing its deferred activation and/or deactivation time.

When modifying a dynamic ADC rule with a prior and/or new deferred activation and/or deactivation time, the PCRF shall provide all attributes of that rule, including attributes that have not changed.

NOTE: In this case, the PCRF omission of an attribute that has a prior value will erase that attribute from the rule.

6.9 Policy decisions based on spending limits

Policy decisions based on spending limits is a function that allows PCRF taking actions related to the status of policy counters that are maintained in the OCS.

The identifiers of the policy counters that are relevant for a policy decision in the PCRF may be stored in the PCRF or possibly in SPR. The PCRF is configured with the actions associated with the policy counter status that is received from OCS.

The PCRF may request the status of policy counters in the OCS using the Initial or Intermediate Spending Limit Report Request Procedure. The OCS provides the current status of the requested policy counters to the PCRF. The OCS may in addition provide one or more pending statuses for a requested policy counter together with the time they have to be applied. The PCRF shall immediately apply the current status of a policy counter. A pending status of a policy counter shall autonomously become the current status of a policy counter at the PCRF when the indicated corresponding time is reached. Subsequently provided information for pending statuses of a policy counter shall overwrite the previously received information.

The PCRF may subscribe to spending limit reporting for policy counters from the OCS using the Initial or Intermediate Spending Limit Report Request procedure. If spending limit reporting for a policy counter is enabled, the OCS shall notify the PCRF of changes in the status of this policy counter (e.g. daily spending limit of $2 reached) and optionally pending statuses of this policy counter together with their activation time (e.g. due to a billing period that will expire at midnight). The PCRF may cancel spending limit reporting for specific policy counter(s) using the Intermediate Spending Limit Report Request procedure, or for all policy counter(s) using the Final Spending Limit Report Request procedure.

The PCRF uses the status of each relevant policy counter, and optional pending policy counter statuses if known, as input to its policy decision to apply operator defined actions, e.g. change the QoS (e.g. downgrade APN-AMBR), modify the PCC/QoS/ADC Rules to apply gating or change charging conditions.

NOTE: The relationship between a policy counter identifier and the Charging Key could be 1-1. However it could also be assumed that services that share the same Charging Key can be associated with different policy counters i.e. although they are rated in the same way they are subject to different actions regarding (e.g. QoS and gating) and are therefore counted separately. Likewise services that share the same policy counters can be associated with different Charging Key.

7 PCC Procedures and flows

7.1 Introduction

The specification of the PCC procedures and flows is valid for the general scenario. Access specific information is included in Annex A, Annex D, Annex H and Annex P.

The description includes procedures for IP-CAN Session Establishment, Modification and Termination. The IP-CAN Session modification comprises IP-CAN bearer establishment, modification, termination, as well as unsolicited PCC decisions.

There are three distinct network scenarios for an IP-CAN Session:

Case 1: No Gateway Control Session is required, no Gateway Control Establishment occurs at all (e.g. 3GPP Access where GTP-based S5/S8 are employed, as described in TS 23.401 [17] and the IP-CAN specific Annexes, and non-3GPP accesses where GTP-based S2a or GTP-based S2b is employed, as described in TS 23.402 [18]).

Case 2: A Gateway Control Session is required. The BBERF establishes a Gateway Control Session prior to any IP-CAN session establishment. There are two sub-cases:

2a) The UE acquires a care of address (CoA) that is used for the S2c reference point. The same Gateway Control session applies for all IP-CAN sessions using that CoA.

2b) A Gateway Control Session is required, as described in TS 23.402 [18] and the IP-CAN specific Annexes, Gateway Control Session Establishment, as defined in clause 7.7.1.
Each IP-CAN session is handled in a separate Gateway Control Session.

The PCRF determines at Gx and Gxx session establishment what case applies initially as follows:

1. If the BBERF, at establishment of the Gateway Controls Session, provides an APN, then case 2b applies for the IP-CAN session.

2. If the BBERF, at establishment of the Gateway Controls Session, does not provide any APN, then case 2a applies for the UE. For this case, the PCRF expects tunnelling header information for each IP-CAN session to be provided by the applicable PCEF.

3. If there is no Gateway Control Session for the UE with the same IP-CAN type as indicated over Gx, case 1 applies.

In a handover procedure the applicable case may change for an IP-CAN session. The PCRF determines the new case in the same manner as described above. Details are defined in each such procedure.

The procedures cover non-roaming, roaming with home routed access and roaming with access to a visited PDN.

For the non-roaming case, the H-PCRF plays the full role of PCRF. The V-PCRF is not applicable in this case.

For the roaming case with home routed access, the H-PCRF interacts with the PCEF and, if the Gxx applies, the V-PCRF interacts with the BBERF.

For the roaming case with visited access (a.k.a. local breakout in TS 23.401 [17] and TS 23.402 [18]), the V-PCRF interacts with the PCEF and, if Gxx applies, the BBERF and, if Sd applies, the TDF.

Procedures defined in this clause cover the traffic cases where the TDF is located on Gi/SGi interface.

Procedures defined in clause 7 cover all the traffic cases where roaming partners both operate PCC. For limited PCC deployment scenarios, Annex K and Annex L specify the impacts to these procedures.

In the text describing the steps in each sequence diagram, the designation PCRF, without specifying V- or H-, refers to the PCRF in non-roaming case and refers to either the V-PCRF or the H-PCRF in the roaming cases. The interpretation of the text "PCRF" is thus dependent on the network scenario.

7.2 IP-CAN Session Establishment

This clause describes the signalling flow for IP-CAN Session establishment as well as network prefix and/or IP address assignment to the UE. The AF is not involved.

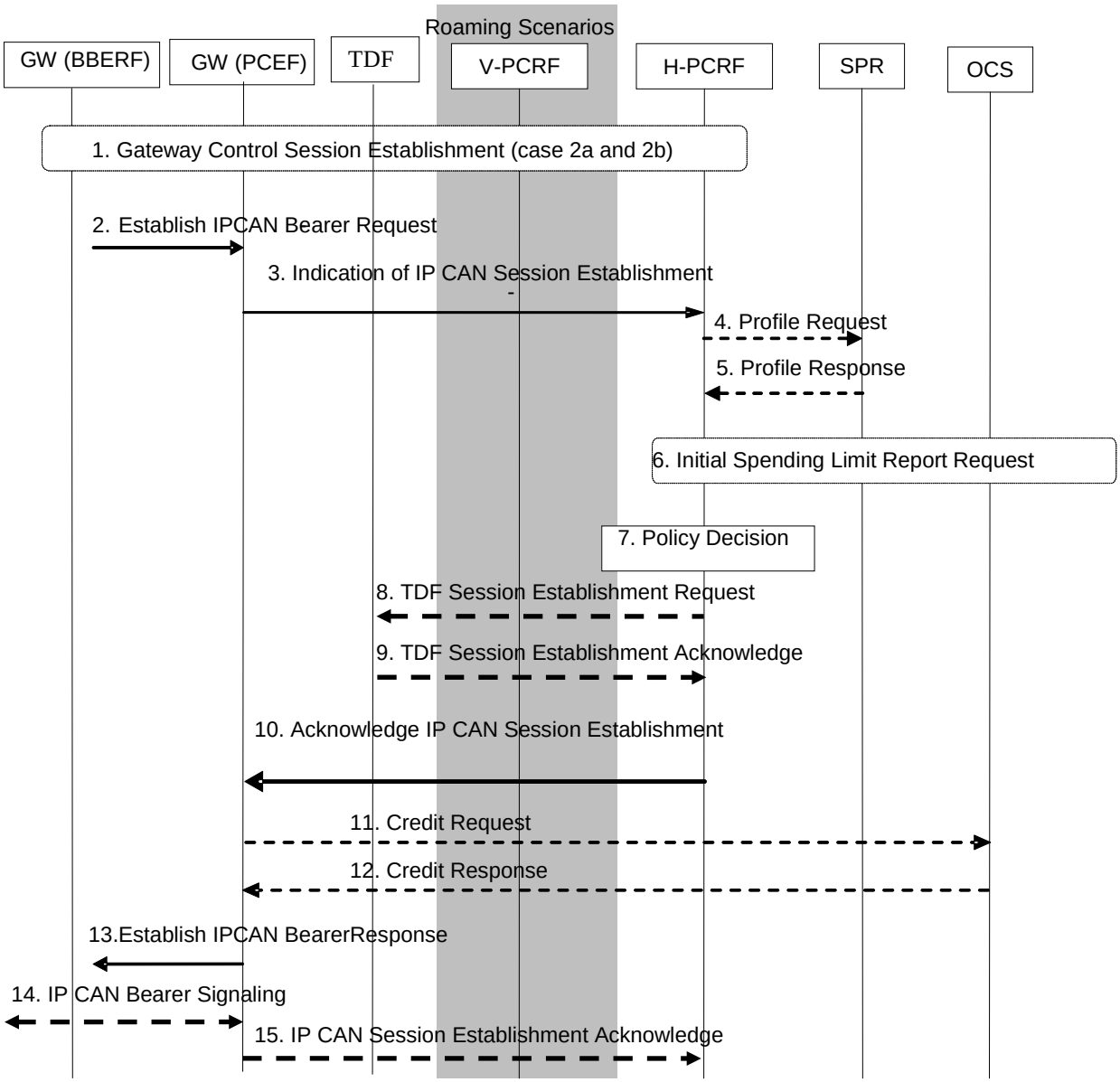

Figure 7.2-1: IP-CAN Session Establishment

This procedure concerns both roaming and non-roaming scenarios. In the roaming case when a Gateway Control Session is used, the V-PCRF should proxy the Gateway Control Session Establishment information between the BBERF in the VPLMN and the H-PCRF over S9 based on PDN-Id and roaming agreements.

For the Local Breakout scenario (Figure 5.1-4) the V-PCRF shall proxy the Indication and Acknowledge of IP-CAN Session Establishment over S9 between the PCEF in the VPLMN and the H-PCRF. For TDF and solicited application reporting, the V-PCRF shall generate ADC rules from PCC Rules containing application detection and control information as instructed by the H-PCRF over S9. Then, the V-PCRF shall install PCC Rules to the PCEF and ADC Rules to the TDF, if applicable.

In the non-roaming case (Figure 5.1-1) the V-PCRF is not involved.

1. The BBERF initiates a Gateway Control Session Establishment procedure as defined in clause 7.7.1 (applicable to case 2a during initial attach and to case 2b, as defined in clause 7.1).

2. The GW(PCEF) receives a request for IP-CAN Bearer establishment. A PDN Connection Identifier may be included in the request. The GW(PCEF) accepts the request and assigns an IP address and (if requested) network prefix for the user.

3. The PCEF determines that the PCC authorization is required, requests the authorization of allowed service(s) and PCC Rules information. The PCEF includes the following information: UE Identity (e.g. MN NAI), a PDN identifier (e.g. APN), the IP-CAN type and the IPv4 address and IPv6 network prefix, if available, the PDN Connection Identifier received for IP-CAN Bearer establishment if multiple PDN connections to the same APN are supported and, if available, the default charging method and the IP-CAN bearer establishment modes supported and information on whether PCEF is enhanced with ADC. It may also include the TDF IP address, in case of solicited application reporting, if applicable. If the UE has declared support for the extended TFT filter format and the PCEF does not prevent the use thereof, then the PCEF shall indicate that support to the PCRF. The PDN identifier, IP address(es) and UE identity enables identification of the IP-CAN session. The IP-CAN Type identifies the type of access from which the IP-CAN session is established. If the service data flow is tunnelled at the BBERF, the PCEF shall provide information about the mobility protocol tunnelling encapsulation header. The PCEF may also include the Default Bearer QoS and APN-AMBR (applicable to case 1 and case 2a, as defined in clause 7.1). In case 2a the PCEF may also include charging ID information. If the GW/PCEF allocates a shorter IPv6 prefix for use with IPv6 Prefix Delegation, the GW/PCEF provides this shorter prefix as the IPv6 network prefix.

NOTE: In case of TDF and solicited application reporting, either PCEF informs PCRF with TDF IP address, or PCRF has it preconfigured per each one of PCEFs.

4. If the PCRF does not have the subscriber's subscription related information, it sends a request to the SPR in order to receive the information related to the IP-CAN session. The PCRF provides the subscriber ID and, if applicable, the PDN identifier to the SPR. The PCRF may request notifications from the SPR on changes in the subscription information.

5. The PCRF stores the subscription related information containing the information about the allowed service(s) and PCC Rules information, and may include MPS EPS Priority, MPS Priority Level and IMS Signalling Priority for establishing a PS session with priority and may also include user profile configuration indicating whether application detection and control should be enabled for the IP-CAN session.

6. If the PCRF determines that the policy decision depends on the status of the policy counters available at the OCS and such reporting is not established for the subscriber, the PCRF sends an Initial Spending Limit Report Request as defined in clause 7.9.1. If policy counter status reporting is already established for the subscriber, and the PCRF determines that the status of additional policy counters are required, the PCRF sends an Intermediate Spending Limit Report Request as defined in clause 7.9.2.

7. The PCRF makes the authorization and policy decision. If MPS EPS Priority, MPS Priority Level, and IMS Signalling Priority are present for the user, the PCRF takes the information into account.

8. For the solicited application reporting, the PCRF requests the TDF to establish the relevant session towards PCRF and provides ADC Rules to the TDF, as per user profile configuration. The PCRF shall include the following information: a PDN identifier (e.g. APN), the IPv4 address and/or IPv6 network prefix, if available, and may also include the UE Identity Information and the location/access network information, if available. The PCRF may also subscribe to the Event Triggers, relevant for the TDF, according to table 6.2.

9. The TDF sends an Ack (accept or reject of the ADC rule operation(s)) to inform the PCRF about the outcome of the actions related to the decision(s) received in step 8. The Ack may also include the list of Event Triggers to report. The Event Triggers indicate to the PCRF what events to be forwarded from the PCRF to the TDF, once PCRF gets the corresponding Event Report from the PCEF/BBERF.

10. The PCRF sends the decision(s) including the chosen IP-CAN bearer establishment mode and indicates whether the use of the extended TFT filter format is allowed in the IP-CAN session, to the PCEF. The GW(PCEF) enforces the decision. The PCRF may provide the default charging method and may include the following information: the PCC Rules to activate and the Event Triggers to report. If PCEF is enhanced with ADC, the applicable PCC rules are provided, according to the user profile configuration. The Policy and Charging Rules allow the enforcement of policy associated with the IP-CAN session. The Event Triggers indicate to the PCEF what events must be reported to the PCRF. If the TDF provided a list of Event Triggers to the PCRF in the previous step, the PCRF shall also provide those Event Triggers to the PCEF.

11. If online charging is applicable, and at least one PCC rule was activated, the PCEF shall activate the online charging session, and provide relevant input information for the OCS decision. Depending on operator configuration PCEF may request credit from OCS for each charging key of the activated PCC rules.

12. If online charging is applicable, the OCS provides the possible credit information to the PCEF and may provide re-authorisation triggers for each of the credits.

    In cases 2a and 2b, if the OCS provides any re-authorisation trigger, which cannot be monitored at the PCEF, the PCEF shall request PCRF to arrange those to be reported by the BBERF via the PCRF.

13. If at least one PCC rule was successfully activated and if online charging is applicable, and credit was not denied by the OCS, the GW (PCEF) acknowledges the IP-CAN Bearer Establishment Request.

14. If network control applies the GW may initiate the establishment of additional IP--CAN bearers. See Annex A and Annex D for details.

15. If the PCRF in step 10 has requested an acknowledgement based on PCC rule operations, the GW (PCEF) sends the IP-CAN Session Establishment Acknowledgement to the PCRF in order to inform the PCRF of the activated PCC rules result.

7.3 IP-CAN Session Termination

7.3.1 UE initiated IP-CAN Session termination

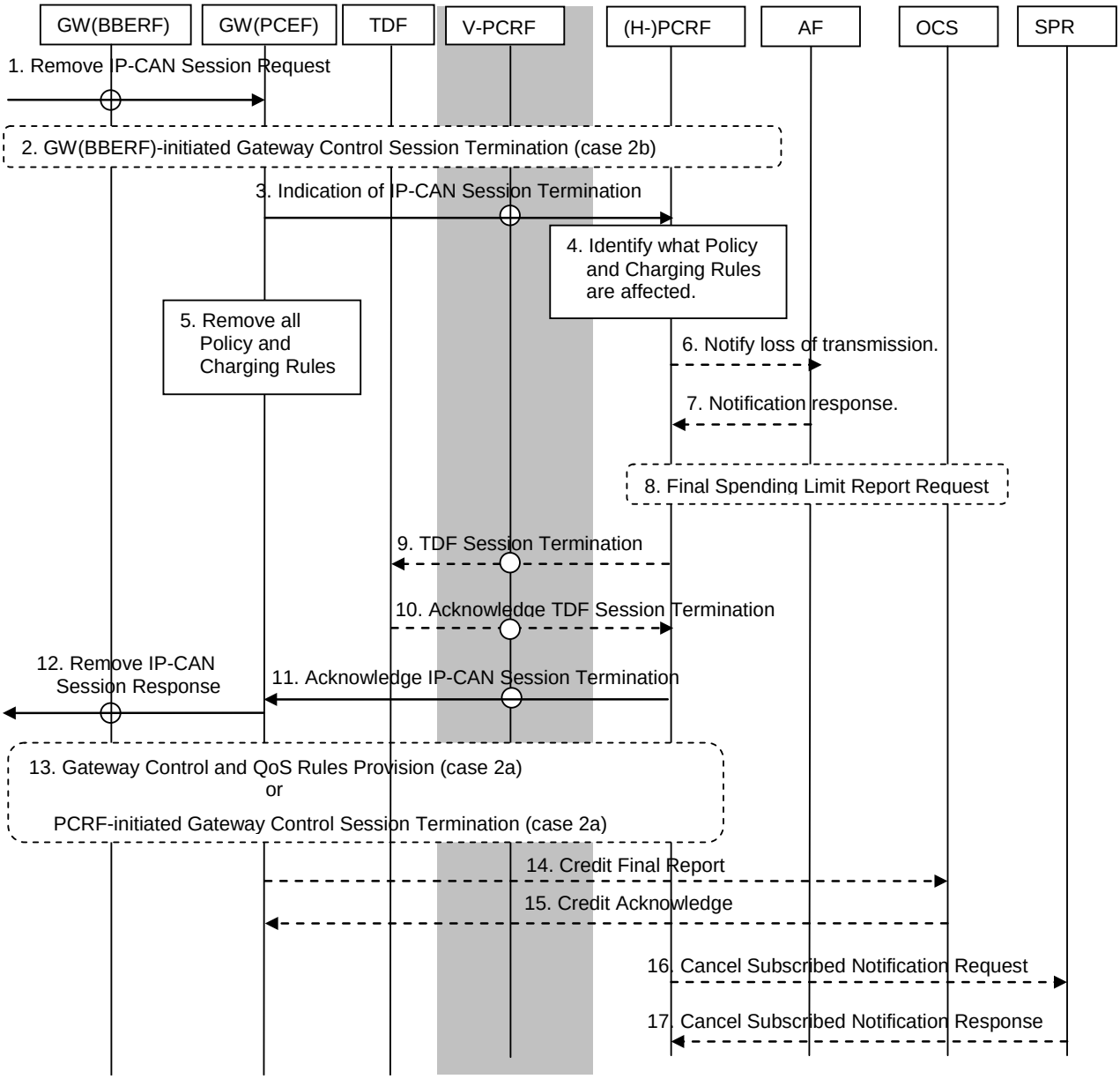

Figure 7.3.1: IP-CAN Session Termination

This procedure concerns both roaming and non-roaming scenarios. In the roaming case when home routed access is used (figure 5.1-3) or if case 2a applies (as defined in clause 7.1) for Local Breakout (figure 5.1-4), the V-PCRF should proxy the GW(BBERF) initiated Gateway Control Session Termination or the Gateway Control and QoS Rules Provision between the BBERF in the VPLMN and the H-PCRF. For those cases it is also the H-PCRF that initiates the PCRF initiated Gateway Control Session Termination procedure or the Gateway Control and QoS Rules Provision procedure and proxy the information over S9 to the BBERF through the V-PCRF.

For the Local breakout scenario (figure 5.1-4) the V-PCRF shall proxy Indication and Acknowledge of IP-CAN Session Termination over S9 between the PCEF in the VPLMN and the H-PCRF. If the AF resides in the VPLMN, the V-PCRF shall proxy AF session signalling over S9 between the AF and the H-PCRF.

NOTE 1: The case when the AF resides in the VPLMN is not showed in the figure.

For the same scenario if either case 1 or case 2b applies (as defined in clause 7.1), the V-PCRF may respond to/initiate the Gateway Control Session procedures locally without notifying the H-PCRF.

In the non-roaming case (figure 5.1-1) the V-PCRF is not involved at all.

1. If case 2b applies, the GW(BBERF) receives a request to remove the IP-CAN session. In case 2a, the request goes transparently through the GW(BBERF). In all cases, the GW(PCEF) receives a request to remove the IP-CAN session.

2. If case 2b applies, the GW(BBERF)-initiated GW Control Session Termination procedure as defined in clause 7.7.2.1 is initiated.

3. The GW(PCEF) indicates that the IP-CAN Session is being removed and provides relevant information to the PCRF.

NOTE 2: The GW(PCEF) may proceed to step 11 in parallel with the indication of IP-CAN Session termination.

4. The PCRF finds the PCC Rules that require an AF to be notified and removes PCC Rules for the IP-CAN session.

5. The GW(PCEF) removes all PCC Rules associated with the IP-CAN session.

6. The PCRF notifies the AF that there are no transmission resources for the service if this is requested by the AF.

7. The AF acknowledges the notification of the loss of transmission resources.

8. If this is the last IP-CAN session for this subscriber requiring policy counter status reporting, the Final Spending Limit Report Request as defined in clause 7.9.3 is sent. If any existing IP-CAN sessions for this subscriber require policy counter status reporting, the Intermediate Spending Limit Report Request as defined in clause 7.9.2 may be sent to alter the list of subscribed policy counters.

9. If there is an active TDF session between TDF and PCRF, the PCRF terminates the TDF session (s).

10. For the solicited application reporting, the TDF deactivates all the ADC Rules associated with the TDF session. The TDF acknowledges the termination request from the PCRF.

11. The PCRF removes the information related to the terminated IP-CAN Session (subscription information etc.), and acknowledges to the GW(PCEF) that the PCRF handling of the IP-CAN session has terminated. This interaction is the response to the GW(PCEF) request in step 3.

NOTE 3: Step 11 may be initiated any time after step 7.

12. The GW (PCEF) continues the IP-CAN Session removal procedure.

13. If case 2a applies, the GW Control and QoS Rules Provision procedure as defined in clause 7.7.4 may be initiated to remove the QoS rules associated with the IP-CAN session being terminated. This applies e.g. in case the Gateway Control Session shall remain to serve other IP-CAN sessions.

    Alternatively, if case 2a applies and the PCRF determines that all QoS rules are to be removed and the Gateway Control Session shall be terminated, the PCRF-initiated GW Control Session Termination procedure as defined in clause 7.7.2.2 is initiated. This applies e.g. in case the UE is detached and the CoA acquired by the UE is not used for any other IP-CAN session.

14. If online charging is applicable, the PCEF issues final reports and returns the remaining credit to the OCS.

NOTE 4: Step 14 may be initiated any time after step 11.

15. If online charging is applicable the OCS acknowledges that credit report and terminates the online charging session.

16. The PCRF sends a cancellation notification request to the SPR if it has subscribed such notification. If all IP-CAN sessions of the user to the same APN are terminated, the PCRF stores the remaining usage allowance in the SPR.

NOTE 5: Step 16 may be initiated any time after step 11.

17. The SPR sends a response to the PCRF.

NOTE 6: The IP-CAN Session removal procedure may proceed in parallel with the indication of IP-CAN Session termination.

7.3.2 GW(PCEF) initiated IP-CAN Session termination

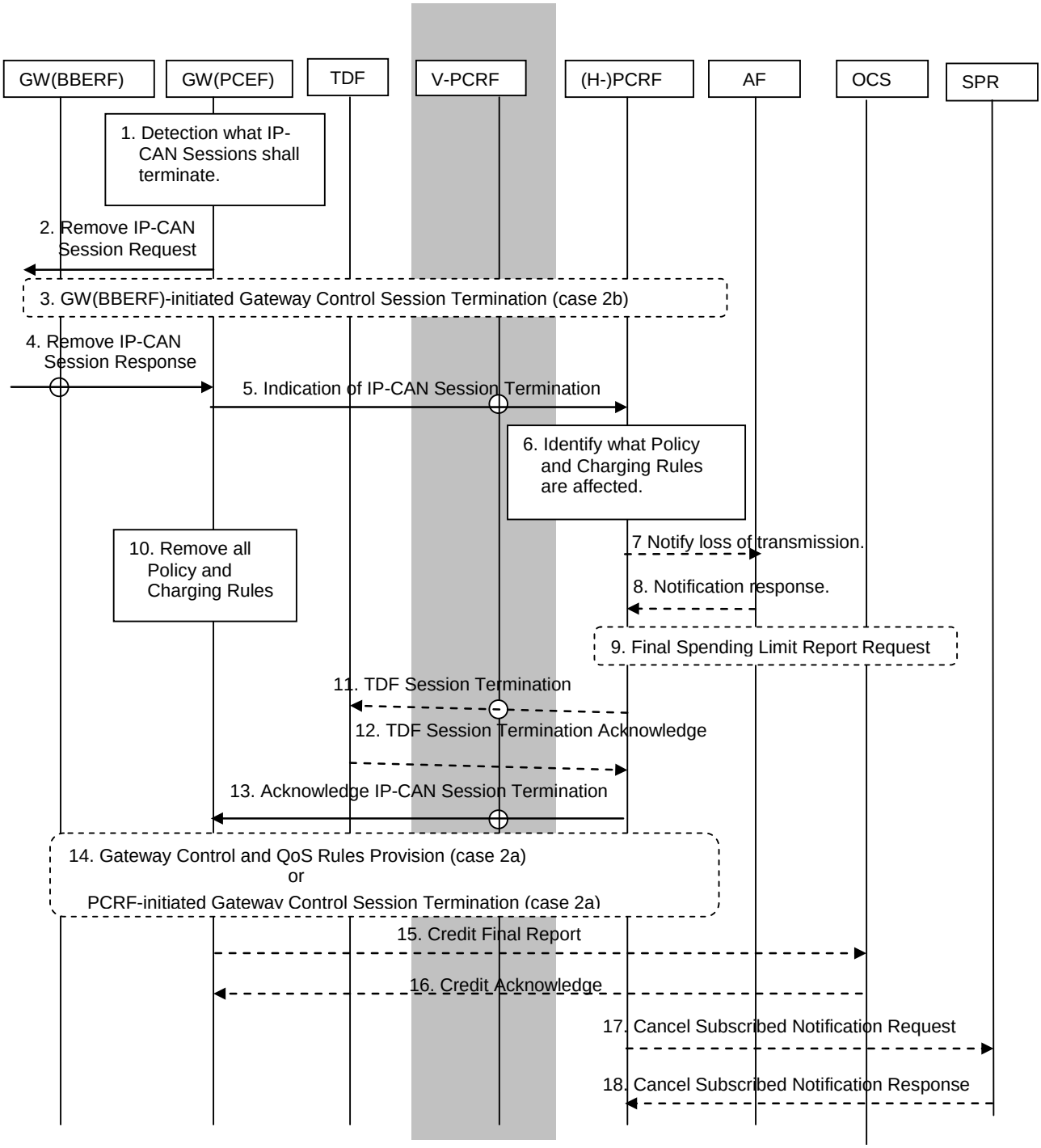

Figure 7.3.2: GW(PCEF) Initiated IP-CAN Session Termination

This procedure concerns both roaming and non-roaming scenarios. In the roaming case when home routed access is used (figure 5.1-3) or if case 2a applies (as defined in clause 7.1) for Local Breakout (figure 5.1-4), the V-PCRF should proxy the GW(BBERF) initiated Gateway Control Session Termination or the Gateway Control and QoS Rules Provision between the BBERF in the VPLMN and the H-PCRF. For those cases it is also the H-PCRF that initiates the PCRF initiated Gateway Control Session Termination procedure or the Gateway Control and QoS Rules Provision procedure and proxy the information over S9 to the BBERF through the V-PCRF.

For the Local breakout scenario (figure 5.1-4) the V-PCRF shall proxy Indication and Acknowledge of IP-CAN Session Termination over S9 between the PCEF in the VPLMN and the H-PCRF. If the AF relies in the VPLMN, the V-PCRF shall proxy AF session signalling over S9 between the AF and the H-PCRF.

NOTE 1: The case when the AF resides in the VPLMN is not showed in the figure.

For the same scenario if either case 1 or case 2b applies (as defined in clause 7.1), the V-PCRF may respond to/initiate the Gateway Control Session procedures locally without notifying the H-PCRF.

In the non-roaming case (figure 5.1-1) the V-PCRF is not involved at all.

1. The GW(PCEF) detects that IP-CAN Session termination is required.
2. The GW(PCEF) sends a request to remove the IP-CAN session.
3. If case 2b applies, the GW(BBERF)-initiated GW Control Session Termination procedure as defined in clause 7.7.2.1 is initiated.
4. The GW(PCEF) receives the response for the IP-CAN session removal.
5. The GW(PCEF) indicates the IP-CAN Session termination and provides the relevant information to the PCRF.
6. The PCRF finds the PCC Rules that require an AF to be notified.
7. The PCRF notifies the AF that there are no transmission resources for the service if this is requested by the AF.
8. The AF acknowledges the notification on the loss of transmission resources.
9. If this is the last IP-CAN session for this subscriber requiring policy counter status reporting, the Final Spending Limit Report Request as defined in clause 7.9.3 is sent. If any existing IP-CAN sessions for this subscriber require policy counter status reporting, the Intermediate Spending Limit Report Request as defined in clause 7.9.2 may be sent to alter the list of subscribed policy counters.
10. The GW(PCEF) removes all the PCC Rules associated with the IP-CAN session.
11. If there is an active TDF session between TDF and PCRF, the PCRF informs TDF about IP-CAN session termination.
12. For the solicited application reporting, the TDF deactivates all the ADC Rules associated with the TDF session. The TDF acknowledges the termination request from the PCRF.
13. The PCRF removes the information related to the terminated IP-CAN Session (subscription information etc.), and acknowledges the IP-CAN Session termination.

NOTE 2: Step 13 may be initiated any time after step 6.

14. If case 2a applies, the GW Control and QoS Rules Provision procedure as defined in clause 7.7.4 may be initiated to remove the QoS rules associated with the IP-CAN session being terminated. This applies e.g. in case the Gateway Control Session shall remain to serve other IP-CAN sessions.

    Alternatively, if case 2a applies and the PCRF determines that the Gateway Control session shall be terminated, the PCRF-initiated GW Control Session Termination procedure as defined in clause 7.7.2.2 is initiated. This applies e.g. in case the UE is detached and the CoA acquired by the UE is not used for any other IP-CAN session.
15. If online charging is applicable, the GW issues final reports and returns the remaining credit to the OCS.

NOTE 3: Step 15 may be initiated any time after step 13.

16. If online charging is applicable the OCS acknowledges the credit report and terminates the online charging session.
17. The PCRF sends a cancellation notification request to the SPR if it has subscribed such notification. If all IP-CAN sessions of the user to the same APN are terminated, the PCRF stores the remaining usage allowance in the SPR.

NOTE 4: Step 17 may be initiated any time after step 8.

18. The SPR sends a response to the PCRF.

7.4 IP-CAN Session Modification

7.4.1 IP-CAN Session Modification; GW (PCEF) initiated

This sub-clause describes the signalling flow for the IP-CAN Session modification initiated by the GW(PCEF). These modifications include IP-CAN bearer establishment and termination as well as modification if the triggering conditions given to the PCEF are fulfilled.

For the PCEF enhanced with ADC, the reason for such a modification may be that a start or stop of application traffic that matches with one of the activated PCC Rules is detected.

The AF may be involved. An example of the scenario is authorization of a session-based service for which an IP-CAN Session is also modified.

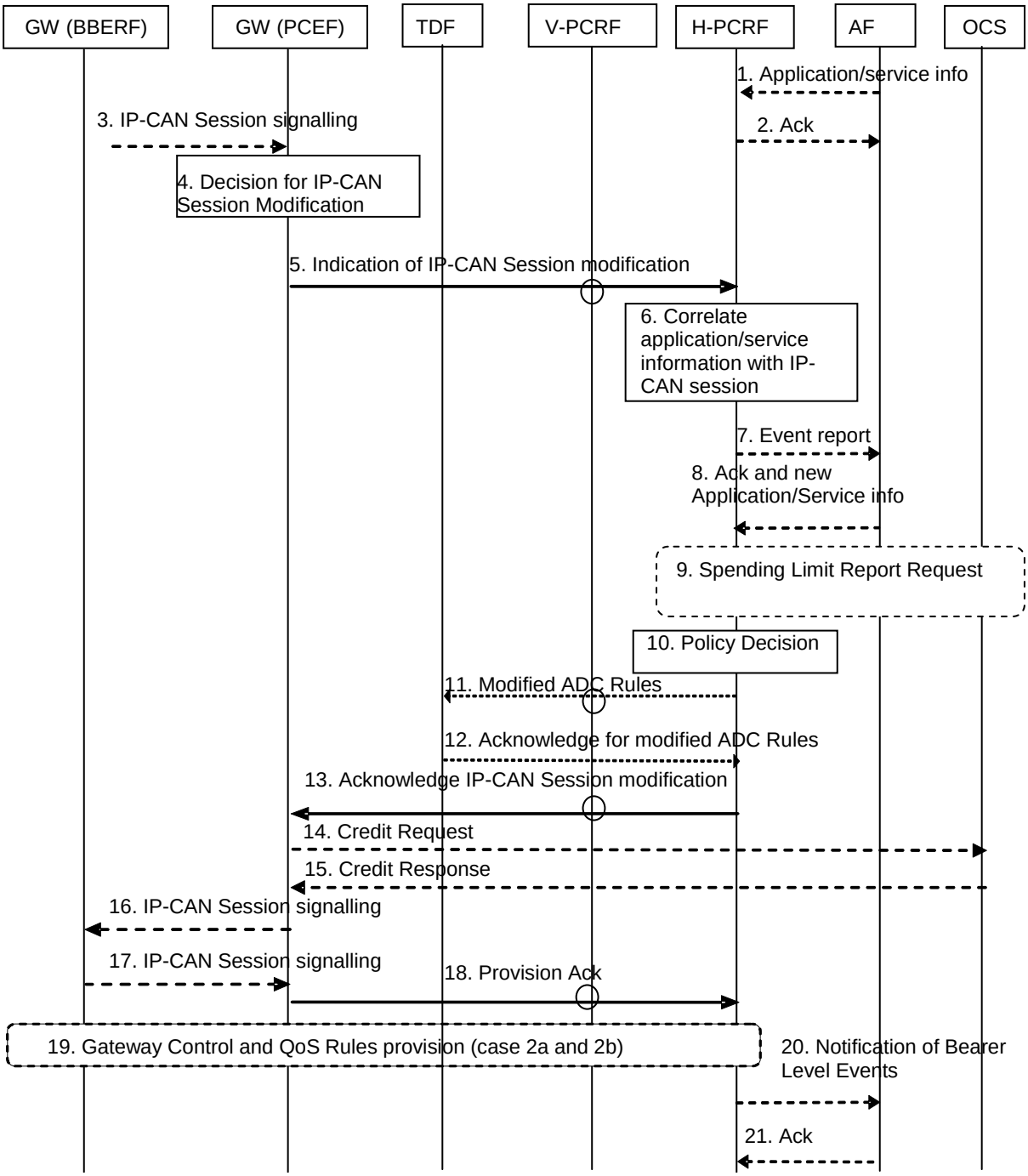

Figure 7.4: IP-CAN Session Modification; GW(PCEF) initiated

This procedure concerns both roaming and non-roaming scenarios. In the roaming case when home routed access applies (figure 5.1-3) or if case 2a applies (as defined in clause 7.1) for Local Breakout (figure 5.1-4), when a Gateway Control Session is used, the H-PCRF may initiate a Gateway Control and QoS Rules Provisioning procedure towards the BBERF and proxy the information through the V-PCRF over S9.

For case 2b in the Local Breakout scenario (figure 5.1-4) and if the Gateway Control Session is terminated locally at the V-PCRF, the V-PCRF shall initiate the Gateway Control and QoS Rules Provisioning procedure locally without notifying the H-PCRF. For this case the V-PCRF shall proxy the Indication and Acknowledge of IP-CAN Session Modification over S9 between the PCEF in the VPLMN and the H-PCRF. If the AF is located in the VPLMN for this scenario, the V-PCRF shall proxy AF session signalling over S9 between the AF and the H-PCRF.

NOTE 1: The case when the AF resides in the VPLMN is not shown in the figure.

In the non-roaming case (figure 5.1-1) the V-PCRF is not involved at all.

1. Optionally, the AF provides/revokes service information to the PCRF due to AF session signalling. The AF may subscribe at this point to notification of bearer level events related to the service information.

NOTE 2: For the PCRF to generate the applicable events, the PCRF instructs the PCEF to report events related to the corresponding PCC rules. Such events are not shown in this sequence diagram.

2. The PCRF stores the service information and responds with the Acknowledgement to the AF.

3. The GW (PCEF) may receive IP-CAN session signalling for IP-CAN Session modification. PDN Connection Identifier may be included in the IP-CAN session signalling.

4. The GW (PCEF) makes a decision to trigger IP-CAN Session modification either caused by the previous step or based on an internal decision or, e.g. if the GW (PCEF) enhanced with ADC, has detected the start/ stop of application traffic, requested by one of the activated PCC Rules.

5. The GW (PCEF) determines that the PCC interaction is required and sends an Indication of IP-CAN Session modification (Event Report, affected PCC Rules, if available, the PDN Connection Identifier) to the PCRF and, if changed, the new IP-CAN bearer establishment modes supported. If there is a limitation or termination of the transmission resources for a PCC Rule, the GW (PCEF) reports this to the PCRF. If flow mobility applies, the GW (PCEF) may include updated IP flow mobility routing information for any IP flows; the GW (PCEF) also provides an indication if default route for the IP-CAN session is changed.

6. The PCRF correlates the request for PCC Rules with the IP-CAN session and service information available at the GW (PCEF).

7. The PCRF may need to report to the AF an event related to the transmission resources if the AF requested it at initial authorisation.

8. The AF acknowledges the event report and/or responds with the requested information.

9. If the PCRF determines a change to policy counter status reporting is required, it may alter the subscribed list of policy counters using the Initial, Intermediate or Final Spending Limit Report Request procedures as defined in clauses 7.9.1, 7.9.2 and 7.9.3.

10. The PCRF makes the authorization and policy decision.

11. For the TDF solicited application reporting, the steps 11-12 take place. The PCRF provides all new ADC decisions to the TDF. This may include ADC Rules activation, deactivation and modification. This may also include the list of Event triggers and also Event Report for the Event triggers, if reported by the PCEF/BBERF to the PCRF, if the TDF has previously subscribed for such an Event Report. In case of local breakout, the V-PCRF shall provide ADC rules generated from PCC Rules providing application detection and control as instructed by the H-PCRF over S9.

    For unsolicited application reporting and if the PCRF has recorded the release of an IPv4 address in step 5, the PCRF terminates the related TDF session.

12. The TDF sends an Ack (accept or reject of the ADC rule operation(s)) to inform the PCRF about the outcome of the actions related to the decision(s) received in step 11. The Ack may also include the list of Event Triggers to report. The Event Triggers indicate to the PCRF what events to be forwarded from the PCRF to the TDF, once PCRF gets the corresponding Event Report from the PCEF/BBERF.

13. The PCRF sends an Acknowledge of IP-CAN Session modification (PCC Rules, Event Triggers and, if changed, the chosen IP-CAN bearer establishment mode) to the GW (PCEF). The GW (PCEF) enforces the decision. If the TDF provided a list of Event Triggers to the PCRF in the previous step, the PCRF shall also provide those Event Triggers to the PCEF.

14. If online charging is applicable, the GW (PCEF) may request credit for new charging keys from and/or shall issue final reports and return remaining credit for charging keys no longer active to the OCS.

15. If OCS was contacted, the OCS provides the credit information to the GW (PCEF), and/or acknowledges the credit report.

16 The GW (PCEF) acknowledges or rejects any IP-CAN Session signalling received in step 3.

    An IP-CAN bearer establishment is accepted if at least one PCC rule is active for the IP-CAN bearer and in case of online charging credit was not denied by the OCS. Otherwise, the IP-CAN bearer establishment is rejected.

    An IP-CAN bearer termination is always acknowledged by the GW (PCEF).

    An IP-CAN bearer modification not upgrading the QoS and not providing traffic mapping information is always acknowledged by the GW (PCEF). An IP-CAN bearer modification is accepted if the provided traffic mapping information is accepted by the PCRF. Otherwise, the IP-CAN bearer modification is rejected.

    In case of a GW (PCEF) internal decision the GW (PCEF) initiates any additional IP-CAN Session signalling required for completion of the IP-CAN Session modification (applicable to case 1).

    In case the IP-CAN session modification is due to the BBF transitioning from a BBERF in the source access-network to the PCEF, the PCEF initiates IP-CAN bearer signalling to activate bearers in the target access network (applicable to case 1).

17. The GW (PCEF) receives the response for the IP-CAN Session signalling request (applicable to case 1).

18. The GW (PCEF) sends a Provision Ack (accept or reject of the PCC rule operation(s)) to inform the PCRF about the outcome of the GW (PCEF) actions related to the decision(s) received in step 13.

NOTE 3: For Cases 2a and 2b, the rejection of PCC rule operation can only occur as a result of online charging interaction.

19. Based on the result of PCC rule operations, the PCRF decides whether to initiate a Gateway Control and QoS Rules provision procedure as defined in clause 7.7.4, if required to keep the PCC and QoS rules aligned (applicable to cases 2a and 2b, as defined in clause 7.1).

    If there are multiple BBERFs associated with the IP-CAN session, this step is performed with all the affected BBERFs.

20. If the AF requested it, the PCRF notifies the AF of related bearer level events (e.g. transmission resources are established/released/lost).

NOTE 4: Based on the outcome reported in this step the AF performs the appropriate action, e.g. starting charging or terminating the AF session.

21. The AF acknowledges the notification from the PCRF.

7.4.2 IP-CAN Session Modification; PCRF initiated

This clause describes the signalling flow for the IP-CAN Session modification initiated by the PCRF. The AF or TDF or the OCS may be involved. An example of PCRF inputs that may trigger the procedure include:

- Initiation and authorization of a session-based service for which an IP-CAN Session is modified.
- A change in the status of a policy counter.

IP-CAN Session handling and handling of PCC rules for non-session based services, and also general handling of PCC rules that are not subject to AF-interaction or TDF-interaction is also applicable here.

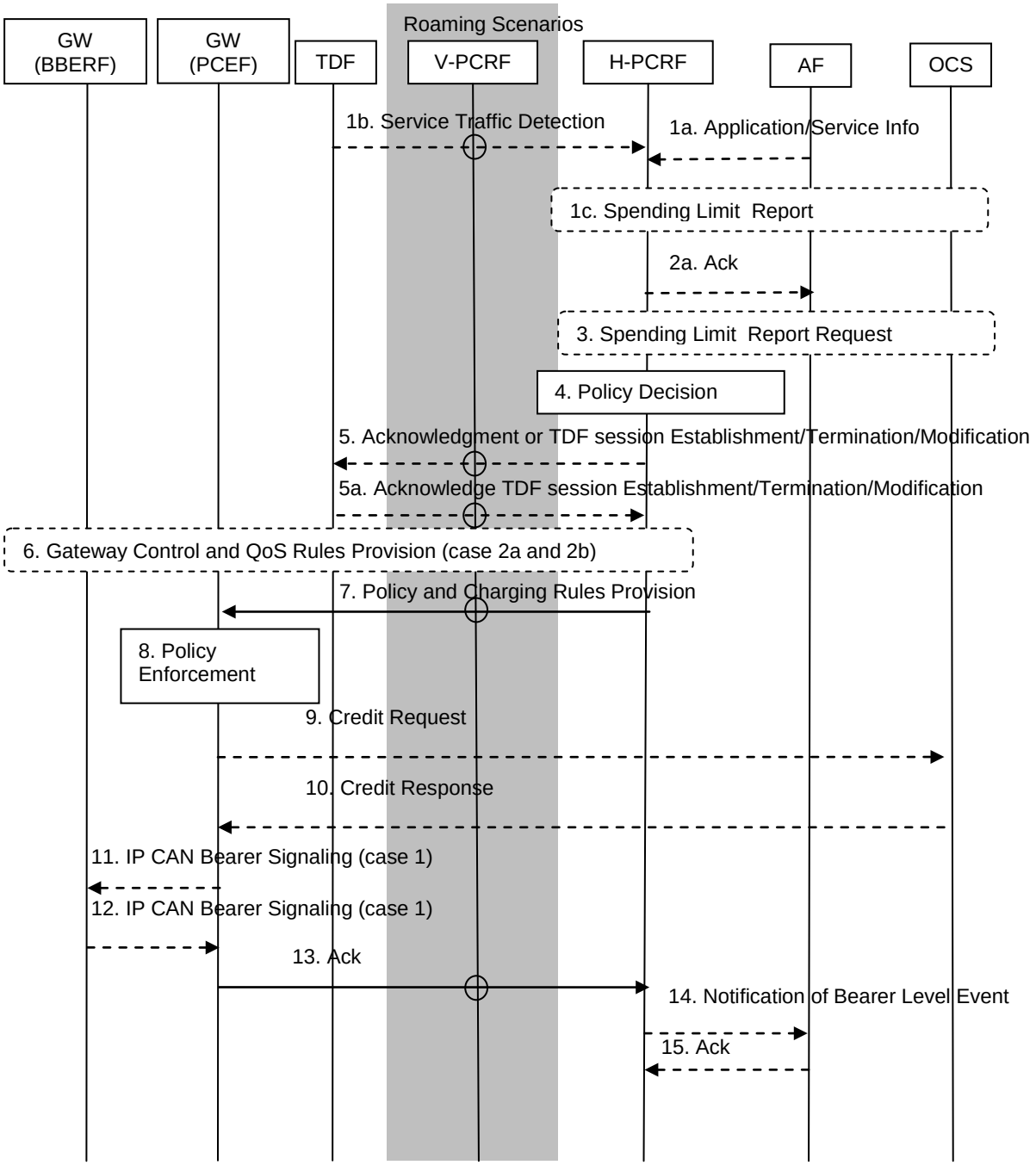

Figure 7.5: IP-CAN Session Modification; PCRF initiated

This procedure concerns both roaming and non-roaming scenarios. In the roaming case when home routed access applies (figure 5.1-3) or if case 2a applies (as defined in clause 7.1) for Local Breakout (figure 5.1-4), when a Gateway Control Session is used, the V-PCRF shall proxy Gateway Control and QoS Rules Request between the BBERF in the VPLMN and the H-PCRF over S9. For this case the H-PCRF may also initiate a Gateway Control and QoS Rules Provisioning procedure towards the BBERF in the VPLMN and proxy the information via the V-PCRF over S9.

For case 2b in the Local Breakout scenario (figure 5.1-4) and if the Gateway Control Session is terminated locally at the V-PCRF, the V-PCRF shall reply to/initiate Gateway Control Session and QoS Rules Request/Provisioning procedures locally without notifying the H-PCRF. For this case the V-PCRF shall proxy the Policy and Charging Rules Provisioning and Acknowledge over S9 between the PCEF in the VPLMN and the H-PCRF. If the AF is located in the VPLMN for this scenario, the V-PCRF shall proxy AF session signalling over S9 between the AF and the H-PCRF.

NOTE 1: The case when the AF resides in the VPLMN is not showed in the figure.

In the non-roaming case (figure 5.1-1) the V-PCRF is not involved at all.

1a. Optionally, the AF provides/revokes service information to the PCRF due to AF session signalling. The AF may subscribe at this point to notification of bearer level events related to the service information.

NOTE 2: For the PCRF to generate the applicable events, the PCRF instructs the PCEF to report events related to the corresponding PCC rules. Such events are not shown in this sequence diagram.

1b. Alternatively, optionally, for TDF, e.g. the TDF detects the start/stop of an application traffic that matches with one of the active ADC Rules.

For solicited application reporting, if the start/stop of application traffic detection Event Trigger was received from the PCRF and the reporting is not muted for the ADC rule, the TDF shall provide application information to the PCRF, including the application identifier, start or stop of application traffic detection event trigger and, for the start of application's traffic detection, the service data flow descriptions, if deducible. Additionally, the application instance identifier should be included in the report both for Start and for Stop of application traffic detection, when the service data flow descriptions are provided.

For unsolicited application reporting, the TDF reports the same application information to the PCRF unconditionally. The TDF establishes a new TDF session if it detects an application for an IPv4 address or IPv6 address for which no corresponding TDF session exists.

1c. Alternatively, optionally, the OCS provides a Spending Limit Report to the PCRF as described in clause 7.9.4.

2a. The PCRF stores the service information if available and responds with the Acknowledgement to the AF. This is applicable to 1a case.

NOTE 3: Without AF interaction, a trigger event in the PCRF may cause the PCRF to determine that the PCC rules require updating at the PCEF, e.g. change to configured policy.

NOTE 4: This procedure could also be triggered by the Gateway Control and QoS Rules Request procedure as described in clause 7.7.3.

3. If the PCRF determines a change to policy counter status reporting is required, it may alter the subscribed list of policy counters using the Initial, Intermediate or Final Spending Limit Report Request procedures as defined in clauses 7.9.1, 7.9.2 and 7.9.3.

4. The PCRF makes the authorization and policy decision.

5. The PCRF may store the application information if provided and responds with an Acknowledgement to the TDF (for unsolicited application reporting) or a TDF session modification (for solicited application reporting). For the TDF solicited application reporting, the PCRF may provide a new ADC decision to the TDF. If the last ADC rule is deactivated, the PCRF requests the TDF to terminate the TDF session towards the PCRF. If there is no active TDF session yet between the TDF and the PCRF, the PCRF requests the TDF to establish the TDF session towards PCRF and provides an ADC decision to the TDF. In case of local breakout, the V-PCRF shall provide ADC rules generated from PCC Rules providing application detection and control as instructed by the H-PCRF over S9.

5a. For the TDF solicited application reporting, in the case of an existing on-going session, if requested by the PCRF, the TDF sends a Provision Ack (accept or reject of the ADC Rule operation(s)). For a new session, the TDF sends an Ack. This is to inform the PCRF about the outcome of the actions related to the received ADC decision(s). The Provision Ack / Ack may also include the list of Event Triggers to report. The Event Triggers indicate to the PCRF what events to be forwarded from the PCRF to the TDF, once PCRF gets the corresponding Event Report from the PCEF/BBERF.

6. If there is no Gateway Control and QoS Rules Reply pending and there is a need to provision QoS rules, the PCRF initiates a Gateway Control and QoS Rules Provision Procedure as defined in 7.7.4 (applicable to cases 2a and 2b, as defined in clause 7.1).

If there are multiple BBERFs associated with the IP-CAN session, Step 5 is performed with the BBERFs that support UE/NW bearer establishment mode.

NOTE 5: If there is a Gateway Control and QoS Rules Reply pending, e.g. this procedure was invoked from the Gateway Control and QoS Rules Request procedure as defined in clause 7.7.3, the PCRF shall use that opportunity for provisioning the applicable QoS rules. If there are multiple BBERFs associated with the IP-CAN session, and the procedure was invoked by a Gateway Control and QoS Rules Request procedure from the primary BBERF, the PCRF may receive a Gateway Control and QoS Rules Request from the non-primary BBERFs.

7. The PCRF sends the Policy and Charging Rules Provision (PCC Rules, Event Trigger, Event Report) to the PCEF. If the TDF provided a list of Event Triggers to the PCRF in the previous step, the PCRF shall also provide those Event Triggers to the PCEF.

8. The PCEF enforces the decision.

9. If online charging is applicable, the PCEF may request credit for new charging keys from and/or shall return the remaining credit for charging keys no longer active to the OCS.

10. If OCS was involved, the OCS provides the credit information to the PCEF, and/or acknowledges the credit report

11. The GW (PCEF) may send an IP-CAN Bearer establishment, modification or termination request (applicable to case 1, as defined in clause 7.1).

    An IP-CAN bearer modification is sent by the GW (PCEF) if the QoS of the IP-CAN bearer exceeds the authorized QoS provided by the PCRF in step 4.

    An IP-CAN bearer termination request is sent by the GW (PCEF) if all PCC rules for an IP-CAN bearer have been removed.

12. The GW (PCEF) receives the response for the IP-CAN Bearer modification or termination request (applicable to case 1).

13. The PCEF sends Acknowledge Policy and Charging Rules Provisioning (accept or reject of the PCC rule operation(s)) to the PCRF.

14. If the AF requested it, the PCRF notifies the AF related bearer level events (e.g. transmission resources are established/released/lost).

15. The AF acknowledges the notification from the PCRF.

7.4.3 Void

7.5 Update of the subscription information in the PCRF

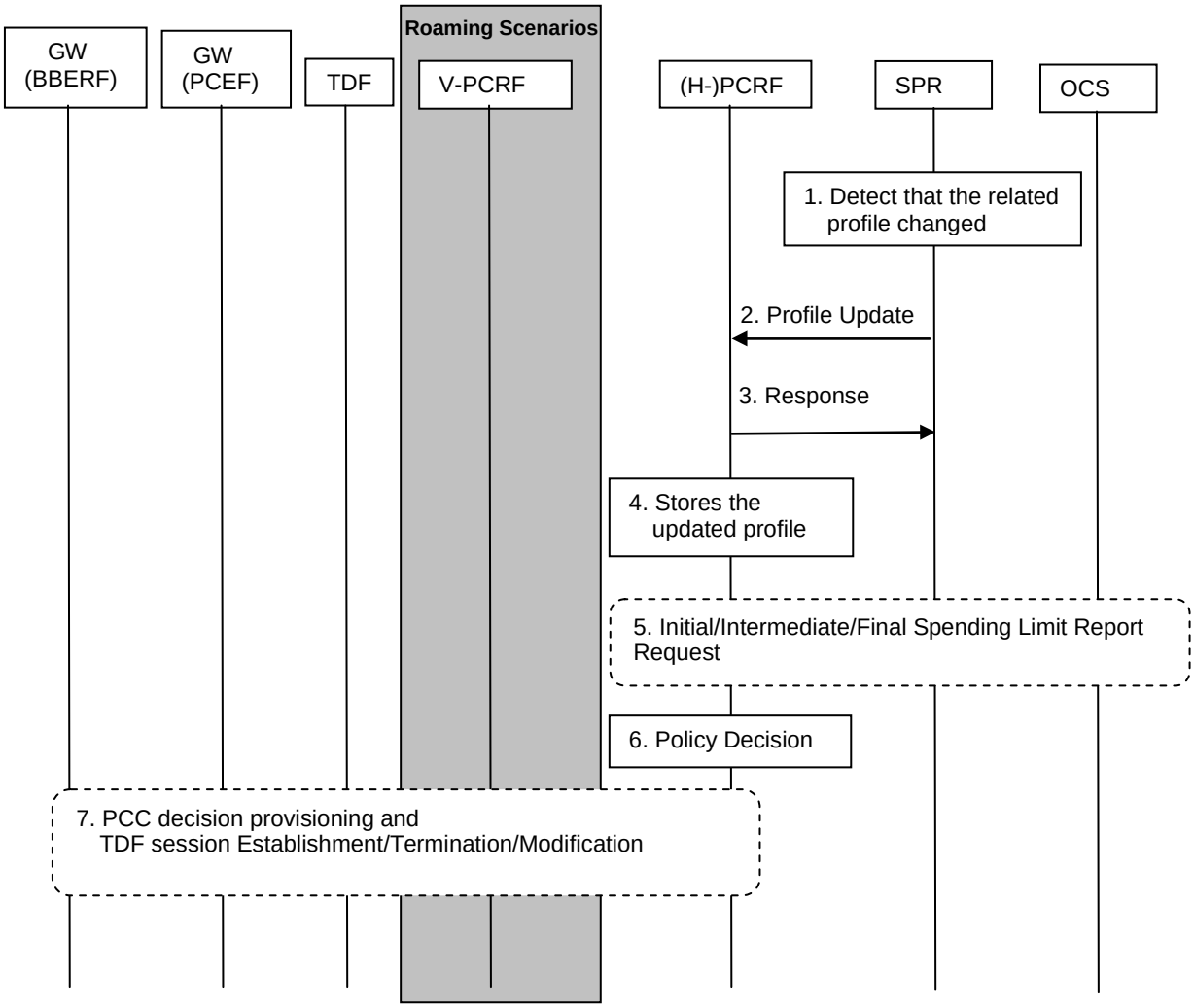

Figure-7.6: Procedure for update of the subscription information in the PCRF

1. The SPR detects that the related subscription profile of an IP-CAN session has been changed.
2. If requested by the PCRF, the SPR notifies the PCRF on the changed profile.
3. The PCRF responds to the SPR.
4. The PCRF stores the updated profile.
5 If the updated subscriber profile requires the status of new policy counters available at the OCS then an Initial/Intermediate Spending Limit Report Request is sent from PCRF as defined in clauses 7.9.1, and 7.9.2. If the updated subscriber profile implies that no policy counter status is needed an Intermediate Spending Limit Report Request is sent from PCRF, if this is the last policy counter status Final Spending Limit Report Request is sent from PCRF as specified in clause 7.9.3.
6. PCRF makes an authorization and policy decision.
7. The PCRF provides all new PCC decisions to the PCEF and BBERF (if applicable), using the PCRF initiated IP-CAN session modification procedure in clause 7.4.2. The PCRF also provides all new ADC decisions to the TDF, if applicable.

7.6 PCRF Discovery and Selection

7.6.1 General principles

This clause describes the underlying principles for PCRF selection and discovery:

- A single logical PCRF entity may be deployed by means of multiple and separately addressable PCRFs.
- The H-PCRF must be able to correlate the AF service session information received over Rx with the right IP-CAN session (PCC Session binding).
- The PCRF must be able to associate sessions established over the different reference points (Gx, S9, Gxa/Gxc, Sd), for the same UE's IP-CAN session. The actual reference points that need to be correlated depend on the scenario (e.g. roaming, LBO etc.).
- It shall be possible to deploy a network so that a PCRF may serve only specific PDN(s). For example, PCC may be enabled on a per APN basis.

  For the case 2a (as defined in clause 7.1), the same PCRF shall support all the PDNs for which PCC is enabled and for which there are potential users accessing by means of case 2a (as defined in clause 7.1).

  It shall also be possible to deploy a network so that the same PCRF can be allocated for all PDN connections for a UE.
- A standardized procedure for contacting the PCRF is preferred to ensure interoperability between PCRFs from different vendors. The procedure may be specific for each reference point. The procedure shall enable the PCRF(s) to coordinate Gx, Rx and, when applicable, Gxa/Gxc interactions, as well as S9, when applicable.
- It shall allow that entities contacting the PCRF may be able to provide different sets of information about the UE and PDN connections. For example:
  - The AF has information about UE IP address and PDN but may not have user identity information
  - The PDN GW has information about user identity (UE NAI), the APN and the UE IP address(es) for a certain PDN connection.
  - For case 2b as defined in clause 7.1, the S-GW and trusted non-3GPP access has information about the user identity (UE NAI) and, the APN(s) but may not know the UE IP address(es).
  - For case 2a as defined in clause 7.1, the trusted non-3GPP access has information about the user identity (UE NAI) and the local IP address (CoA) but may not know the APN or UE IP address(es) (HoA).
  - The TDF (when the unsolicited application reporting applies) has the information about UE IP address, but may not have the UE identity.
- The DRA has information about the user identity (UE NAI), the APN, the UE IP address(es) and the selected PCRF address for a certain IP-CAN Session.

  When the DRA first receives a request for a certain IP-CAN Session (e.g. from the PDN GW), the DRA selects a suitable PCRF for the IP-CAN Session and stores the PCRF address. Subsequently, the DRA can retrieve the selected PCRF address according to the information carried by the incoming requests from other entities (e.g. the AF or the BBERF).

  When the IP-CAN Session terminates, the DRA shall remove the information about the IP-CAN Session. In case of the PCRF realm change, the information about the IP-CAN session stored in the old DRA shall be removed.
- All PCRFs in a PLMN belong to one or more Diameter realms. Routing of PCC messages for a UE towards the right Diameter realm in a PLMN is based on standard Diameter routing, as specified in RFC 3588, i.e. based on UE-NAI domain part. A Diameter realm shall provide the ability of routing PCC messages for the same UE and PDN connection to the same PCRF based on the available information supplied by the entities contacting the PCRF.

- A PLMN may be separated into multiple Diameter realms based on the PDN ID information or IP address range. In this case, the relevant information (PDN ID, IP address, etc) shall be used to assist routing PCC message to the appropriate Diameter realm.
- Unique identification of an IP-CAN session in the PCRF shall be possible based on the (UE ID, PDN ID)-tuple , the (UE IP Address(es), PDN ID)-tuple and the (UE ID, UE IP Address(es), PDN ID).
- Standard IETF RFC 3588 mechanisms and components, e.g. Diameter agents, should be applied to deploy a network where the PCRF implementation specifics are invisible for Diameter clients. The use of Diameter agents, including Diameter redirect agents, shall be permitted, but the use of agents in a certain deployment shall be optional.

NOTE: For the use of private UE IPv4 address TS 29.213 [22] provides guidance.

7.6.2 Solution Principles

In order to ensure that all Diameter sessions for Gx, S9, Gxa/Gxc, Rx and Sd (when the unsolicited application reporting applies) for a certain IP-CAN session reach the same PCRF when multiple and separately addressable PCRFs have been deployed in a Diameter realm, an optional logical "Diameter Routing Agent (DRA)" function is enabled. This resolution mechanism is not required in networks that utilise a single PCRF per Diameter realm. The DRA has the following roles:

- When deployed, DRA needs to be contacted at first interaction point for a given GW and IP-CAN session.

NOTE: How subsequent interactions work is described in TS 29.213 [22].

- When deployed, the DRA is on the Diameter routing path when initiating a session with a PCRF over Gx, Rx, Gxa/Gxc, S9 and Sd.
- The DRA is involved at IP-CAN session establishment by the PDN GW
- The DRA selects the PCRF at initial attach (IP-CAN session or Gateway Control session establishment)
- The DRA is involved at Gateway Control session establishment by the S-GW and trusted non-3GPP access
- The DRA selects the PCRF at unsolicited service reporting over Sd.
- After IP-CAN session or Gateway Control Session establishment, the DRA ensures that the same PCRF is contacted for Rx, Gxa/Gxc, Gx, S9 and Sd.
- The DRA keeps status of assigned PCRF for a certain UE and IP-CAN session.
- It is assumed that there is a single logical DRA serving a Diameter realm.
- In roaming scenarios, there is only a single VPCRF for all the PCC sessions (IP-CAN session, GW control sessions, AF session, etc.) belonging to a single PDN connection of the UE. The VPCRF shall be selected by a DRA in the visited PLMN.

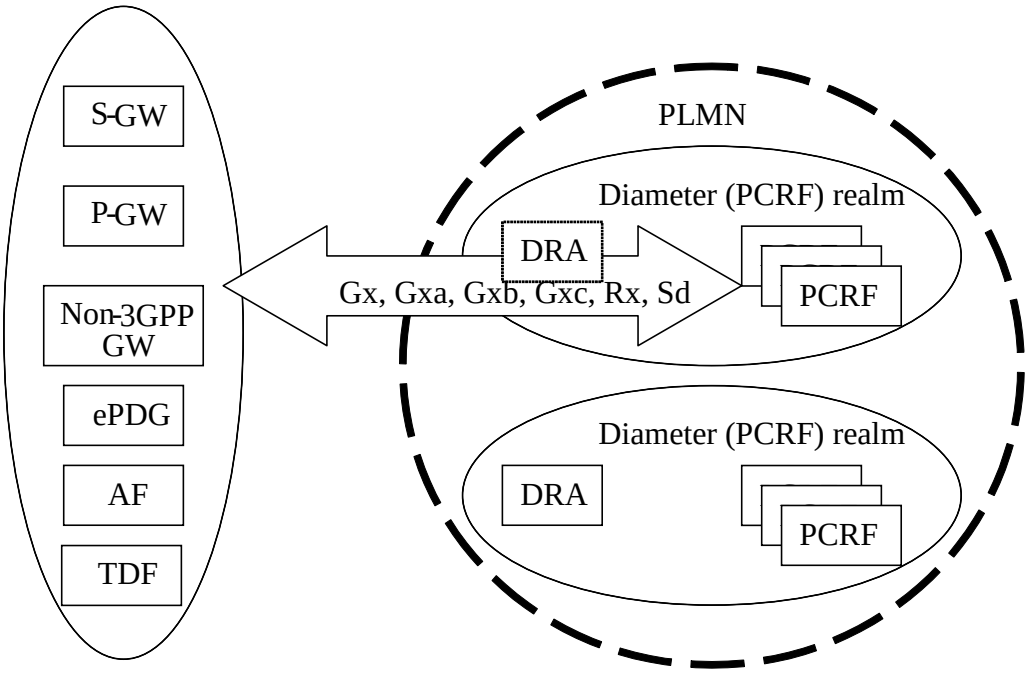

Figure 7.6-1: PCRF selection and discovery using DRA

The DRA functionality should be transparent to the Diameter applications used on the Gx, Gxa/Gxc, S9, Rx or Sd reference points.

In roaming scenario, home routed or local breakout, if the DRA is deployed, the vPCRF is selected by the DRA located in the visited PLMN, and the hPCRF is selected by the DRA located in the home PLMN.

The parameters available for the DRA to be able to determine the already allocated PCRF depend on the reference point over which the DRA is contacted, as described in clause 7.6.1.

7.7 Gateway Control Session Procedures

7.7.1 Gateway Control Session Establishment

7.7.1.0 General

There are two cases considered for Gateway Control Session Establishment:

1. The PCEF establishes the IP-CAN Session during the Gateway Control session establishment. This happens when the UE attaches to the EPC for the first time and when the UE establishes a new PDN Connection.

2. There exists an established IP-CAN Session corresponding to the Gateway Control Session being established. This happens when the BBERF changes, i.e. during BBERF relocation and handovers from and to GTP based EPC.

7.7.1.1 Gateway Control Session Establishment during Attach

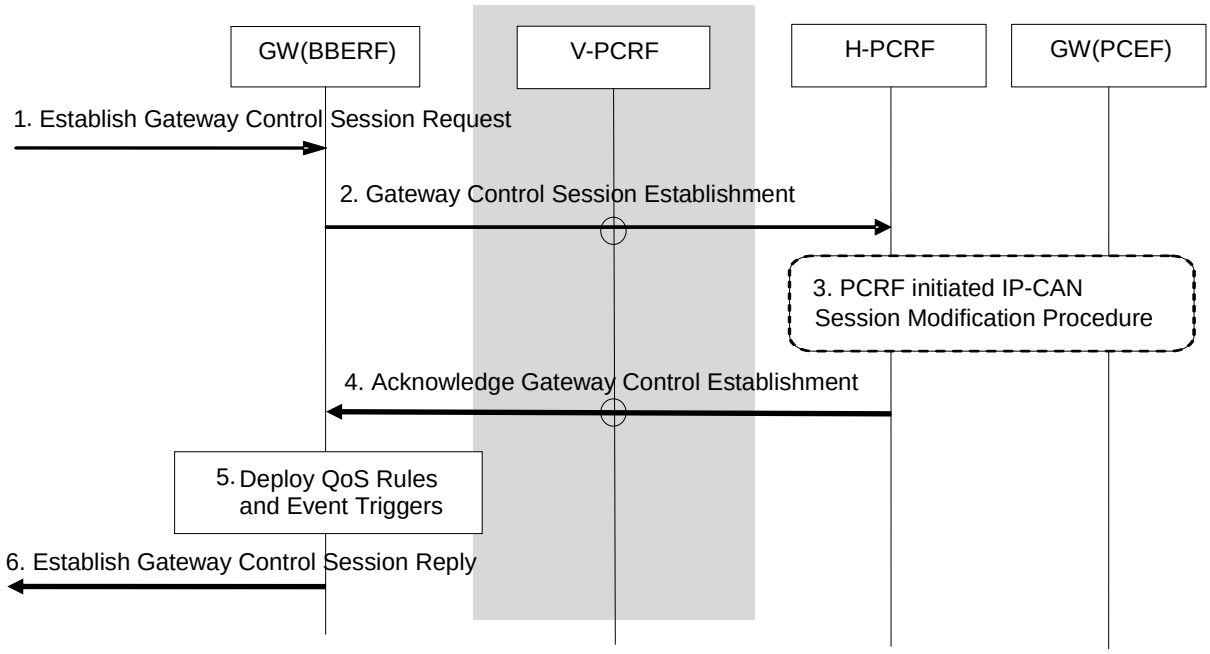

Figure 7.7.1.1-1: Gateway Control Session Establishment during Attach

This procedure concerns both roaming and non-roaming scenarios. In the roaming case when a Gateway Control Session is used, the V-PCRF should proxy the Gateway Control Session Establishment between the BBERF in the VPLMN and the H-PCRF over S9 based on PDN-Id and roaming agreements.

In the non-roaming case (Figure 5.1-1) the V-PCRF is not involved.

1. The GW(BBERF) receives an indication that it must establish a Gateway Control Session.

2. The GW(BBERF) sends the PCRF a Gateway Control Session Establishment. The BBERF includes the following information: IP-CAN Type, UE Identity, PDN Identifier (if known), IP address(es) (if known), an indication that leg linking shall be deferred (applicable for case 2b, as defined in clause 7.1), if available, the PDN Connection Identifier and if available, the IP-CAN bearer establishment modes supported and the indication of BBERF support for the extended TFT filter format. The IP-CAN Type identifies the type of access used by the UE. The UE's identity and PDN Identifier requested are used to identify the subscriber and in PCRF selection to locate the PCRF function with the corresponding IP-CAN session established by the PDN GW. The BBERF may also include the Default Bearer QoS and APN-AMBR (applicable for case 2b, as defined in clause 7.1). An indication that leg linking shall be deferred is included to inform the PCRF that linking the Gateway Control Session to a Gx session shall occur when a matching Gx message is received as described clause 6.2.1.0. Further information is supplied on an access specific basis, as described in the IP-CAN specific Annexes.

NOTE: The BBERF support is a prerequisite for the PCRF enabling the possibility for usage of the extended TFT filter format in the IP-CAN session(s).

3. For GERAN/UTRAN accesses, if the PCRF is required to interact with the GW(PCEF), the PCRF waits until it gets informed about the establishment of the corresponding IP-CAN session (step 7 of the IP-CAN session establishment procedure) and performs a PCRF initiated IP-CAN session modification procedure with the GW(PCEF).

4. The PCRF sends an Acknowledge Gateway Control Session Establishment to the GW(BBERF). The PCRF may include the following information: the chosen IP-CAN bearer establishment mode, QoS Rules and Event Triggers. In case 2a a charging ID may be provided together with QoS rules. The QoS policy rules are employed by the GW(BBERF) to perform Bearer Binding. The Event Triggers indicate events that require the GW(BBERF) to report to the PCRF.

5. The QoS Rules and Event Triggers received by the GW(BBERF) are deployed. This will result in bearer binding being performed, according to the rules. This step may trigger IP-CAN bearer establishment procedures. The details of bearer establishment are IP-CAN specific.

6. An indication of Gateway Control Session Established is sent to the entity that triggered the initiation of the session.

7.7.1.2 Gateway Control Session Establishment during BBERF Relocation

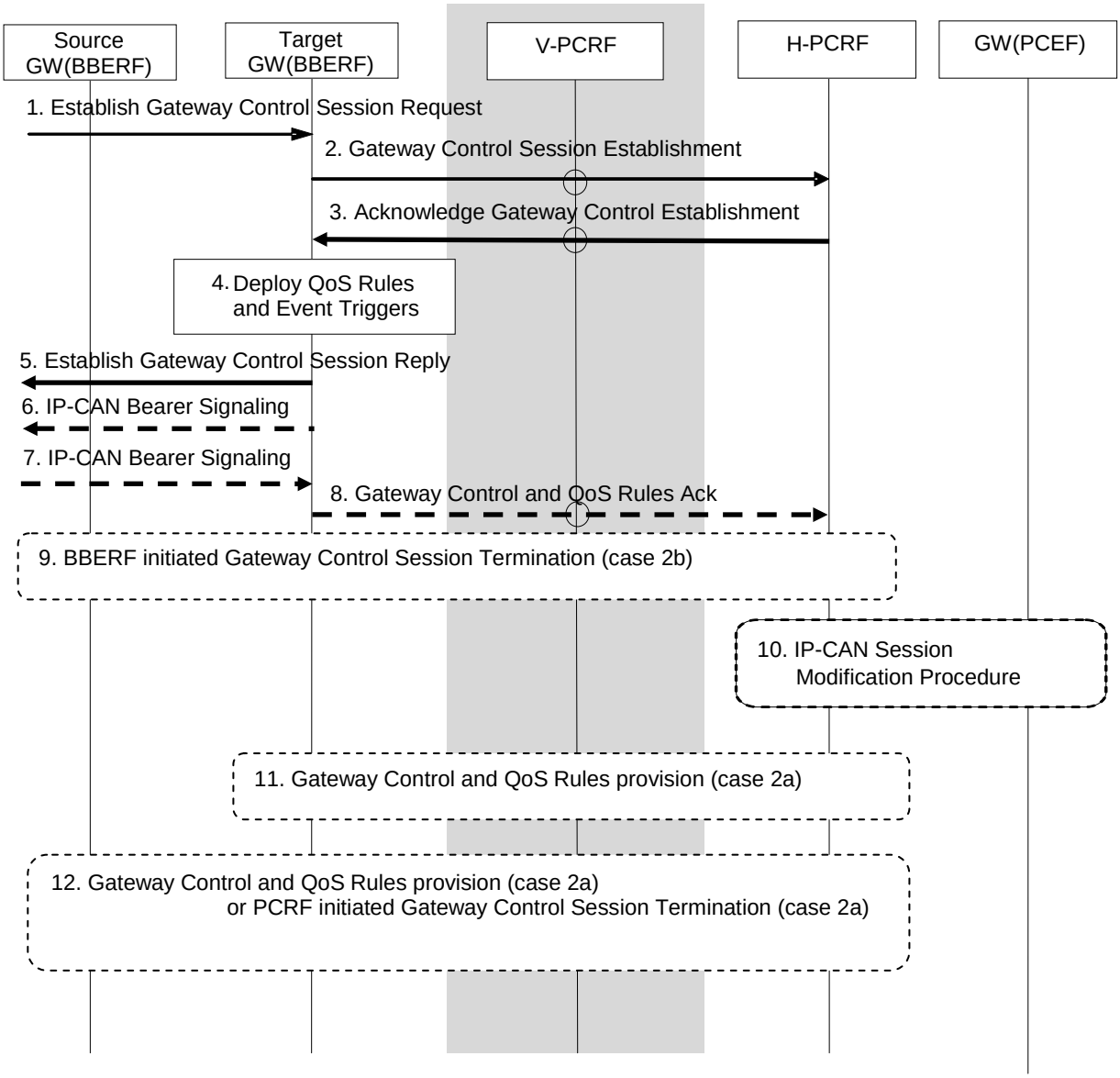

Figure 7.7.1.2-1: Gateway Control Session Establishment during BBERF Relocation

This procedure concerns both roaming and non-roaming scenarios. In the roaming case when a Gateway Control Session is used, the V-PCRF should proxy the Gateway Control Session Establishment between the BBERF in the VPLMN and the H-PCRF over S9 based on PDN-Id and roaming agreements.

In the non-roaming case (Figure 5.1-1) the V-PCRF is not involved.

1. The target GW(BBERF) receives an indication that it must establish a Gateway Control Session.

2. The target GW(BBERF) sends the PCRF a Gateway Control Session Establishment. The BBERF includes the following information: IP-CAN Type, UE Identity, PDN Identifier (if known), IP address(es) (if known), PDN Connection Identifier if available and, if available, the IP-CAN bearer establishment modes supported. The

IP-CAN Type identifies the type of access used by the UE. The UE's identity and PDN Identifier requested are used to identify the subscriber and in PCRF selection to locate the PCRF function with the corresponding IP-CAN session established by the PDN GW. The BBERF may also include the Default Bearer QoS and APN-AMBR (applicable for case 2b, as defined in clause 7.1). If the handover state is unknown to the GW(BBERF), as described in TS 23.402 [18], the GW(BBERF) includes an indication to inform the PCRF that linking the Gateway Control Session to a Gx session shall be deferred as described clause 6.2.1.0 (applicable for case 2b, as defined in clause 7.1). Further information is supplied on an access specific basis, as described in the IP-CAN specific Annexes.

3. If case 2b of clause 7.1 applies and the PCRF correlates the Gateway Control Session with an existing IP-CAN session, it sends an Acknowledge Gateway Control Session Establishment to the target GW(BBERF). The PCRF may include the following information: QoS Rules and Event Triggers. The QoS policy rules are employed by the GW(BBERF) to perform Bearer Binding. The Event Triggers indicate events that require the GW(BBERF) to report to the PCRF. If the BBERF supports NW/UE bearer establishment mode, the PCRF provides to the new BBERF QoS rules corresponding to existing SDFs. For a change of IP-CAN type, the QoS parameters of some of the QoS rules may be changed or some QoS rules may not be provided to the new BBERF, e.g. depending of the capability of the target RAT.

   If case 2a of clause 7.1 applies, the PCRF sends an Acknowledge Gateway Control Session Establishment to the target GW(BBERF). The PCRF includes packet filters and QoS information for the CoA in order to establish the initial bearer, e.g. for the DSMIPv6 signalling. The PCRF may also include Event Triggers.

NOTE: The packet filters and QoS information provided at this step conceptually are not QoS rules as they are not associated with any IP-CAN session. However, it is a stage 3 issue if the packet filters and QoS information are communicated to the BBERF with the same information elements by which QoS rules are communicated.

4. The QoS Rules and Event Triggers received by the target GW(BBERF) are deployed. This will result in bearer binding being performed, according to the rules. This step may trigger IP-CAN bearer establishment procedures. The details of bearer establishment are IP-CAN specific.

5. An indication of Gateway Control Session Established is sent to the entity that triggered the initiation of the session.

6. The target GW(BBERF) initiates the IP-CAN Bearer signalling if required for the QoS Rules and Event Triggers deployed in step 4.

7. The target GW(BBERF) receives the response for the IP-CAN Bearer signalling.

8. The target GW(BBERF) sends the result of the QoS rule activation to the PCRF, indicating whether the resources requested have been successfully allocated.

9. If case 2b applies the source GW(BBERF) initiates the Gateway Control Session Termination procedure as defined in clause 7.7.2.1, if appropriate.

10. If the PCC rules previously provided to the GW(PCEF) need to be removed due to the result of the QoS rule activation as received in step 8, the PCRF updates the GW(PCEF). The PCRF first waits for the PCEF initiated IP-CAN session modification procedure to provide the updates. If the IP-CAN session modification procedure already occurred, the PCRF performs an IP-CAN session modification procedure with the GW(PCEF).

11. If case 2a applies the PCRF initiates a Gateway Control and QoS Rules Provision procedure towards the target GW(BBERF) as defined in clause 7.7.4, if appropriate, in order to provide any QoS Rules based on the IP-CAN session modification of step 10. In case 2a a charging ID may be provided together with QoS rules.

12. If case 2a applies the PCRF initiates a Gateway Control and QoS Rules Provision procedure towards the source GW(BBERF) as defined in clause 7.7.4, if appropriate, in order to remove any QoS Rules affected by the GW(BBERF) re-location. If there is no other IP-CAN session established at the source GW(BBERF), the PCRF instead initiates the Gateway Control Session Termination procedure as defined in clause 7.7.2.2.

7.7.2 Gateway Control Session Termination

7.7.2.1 GW(BBERF)-Initiated Gateway Control Session Termination

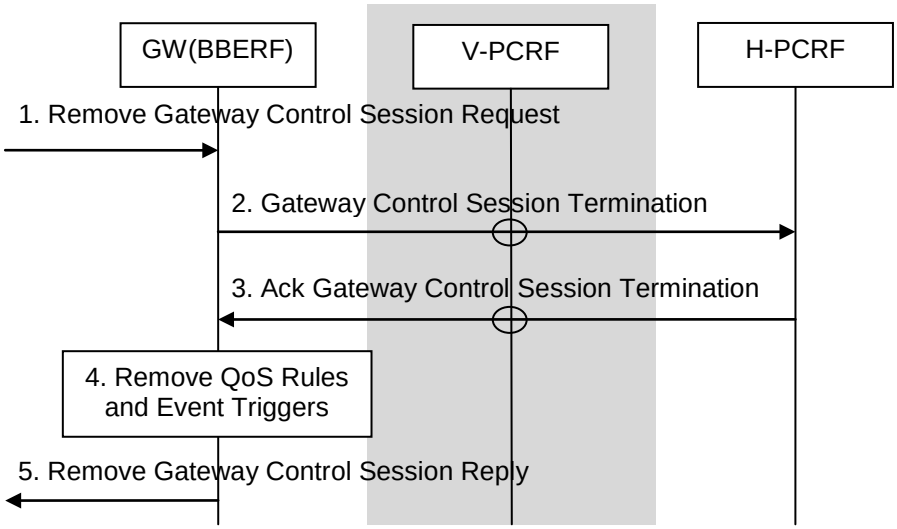

Figure 7.7.2-1: BBERF-Initiated Gateway Control Session Termination

1. The GW(BBERF) is requested to terminate its Gateway Control Session.
2. The GW(BBERF) initiates a Gateway Control Session Termination towards the H-PCRF. If the GW(BBERF) is deployed in a visited network, this procedure is initiated by the GW(BBERF) to the V-PCRF. The V-PCRF forwards the information to the H-PCRF.
3. The H-PCRF replies to the GW(BBERF) with an Ack Gateway Control Session Termination. If the GW(BBERF) is deployed in a visited network, this information is sent by the H-PCRF to the V-PCRF. The V-PCRF forwards the information to the GW(BBERF).
4. The GW(BBERF) removes the QoS rules and Event triggers associated with the Gateway Control Session. This means the GW(BBERF) ceases its bearer binding and other Gateway Control functions associated with the QoS rules and Event Triggers.
5. The GW(BBERF) has completed terminating the session and can continue with the activity that prompted this procedure.

7.7.2.2 PCRF-Initiated Gateway Control Session Termination

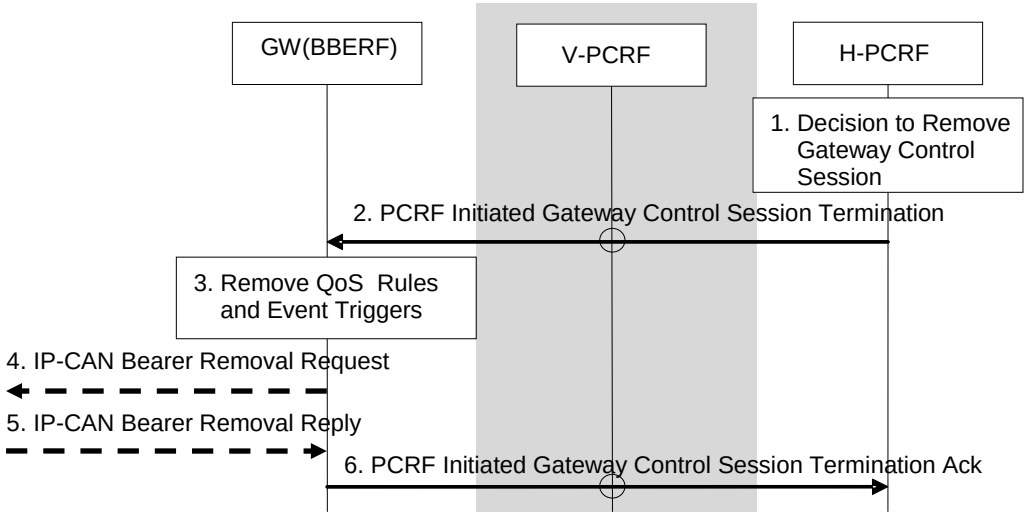

Figure 7.7.2-2: PCRF-Initiated Gateway Control Session Termination

This procedure concerns both roaming and non-roaming scenarios. In the roaming case when a Gateway Control Session is used, the V-PCRF should proxy the Gateway Control Session Termination between the BBERF in the VPLMN and the H-PCRF over S9 based on PDN-Id and roaming agreements.

In the non-roaming case (Figure 5.1-1) the V-PCRF is not involved.

1. The PCRF is requested to terminate its Gateway Control Session.
2. The PCRF sends a PCRF-Initiated Gateway Control Session Termination to the GW(BBERF).
3. The GW(BBERF) removes the QoS rules and Event triggers associated with the Gateway Control Session. This means the GW(BBERF) ceases its bearer binding and other Gateway Control functions associated with the QoS rules and Event Triggers.
4. If the bearer(s) corresponding to the removed QoS rules are still established, the GW(BBERF) initiates an IP-CAN specific bearer removal procedure.
5. The GW(BBERF) receives the response for the IP-CAN specific bearer removal procedure.
6. The GW(BBERF) replies to the PCRF with an PCRF-Initiated Gateway Control Session Termination acknowledgement.

7.7.3 Gateway Control and QoS Rules Request

7.7.3.1 General

There are two cases considered for a Gateway Control and QoS Rules Request depending on the parameters the GW(BBERF) receives:

Case A: In case the GW(BBERF) action does not depend on the subsequent IP-CAN session modification, the GW(BBERF) can acknowledge the request after interacting with the PCRF.

NOTE 1: If QoS rules have to be updated due to the event reporting, the PCRF shall use the Gateway Control and QoS Rules Provision procedure.

Case B: The GW(BBERF) is requested to obtain QoS rules for a Gateway Control Session or to deliver IP-CAN-specific parameters or both.

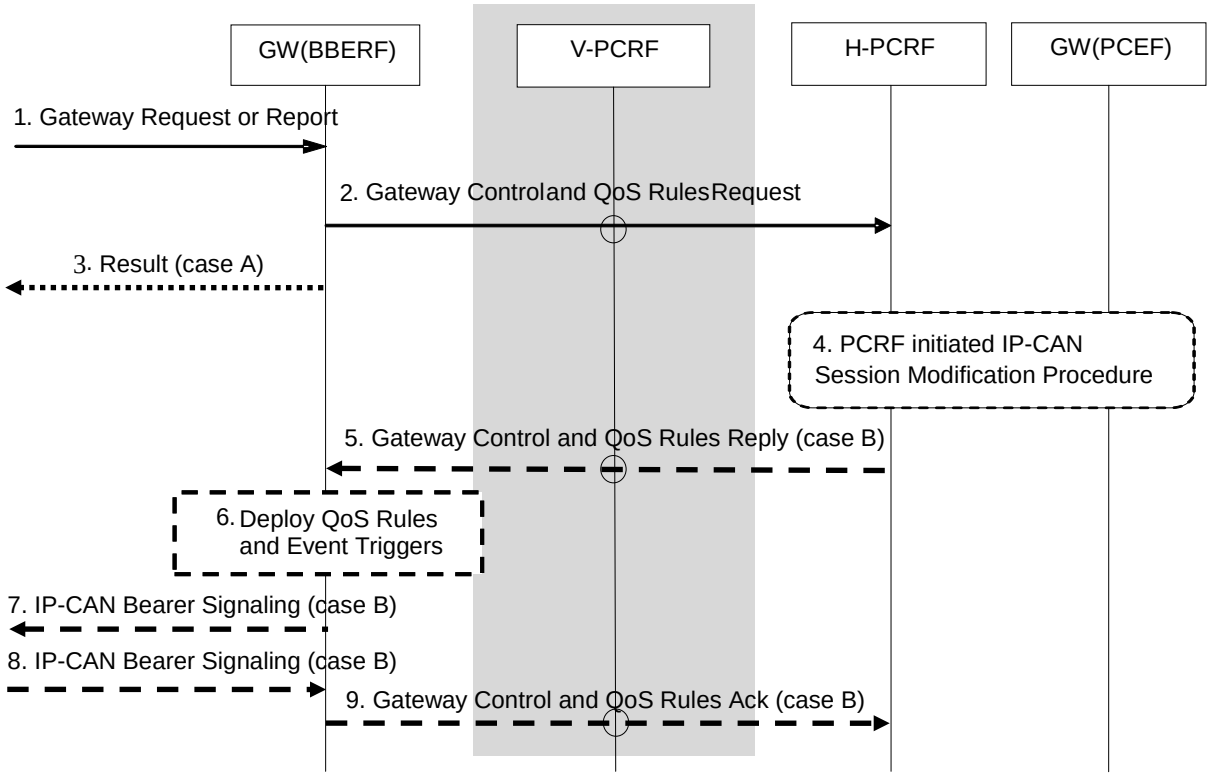

Figure 7.7.3-1: Gateway Control and QoS Rules Request

NOTE 2: If QoS rules have to be updated for case A, the PCRF shall use the Gateway Control and QoS Rules Provision procedure (clause 7.7.4).

This procedure concerns both roaming and non-roaming scenarios. In the roaming case when a Gateway Control Session is used, the V-PCRF should proxy the Gateway Control and QoS Rules Request between the BBERF in the VPLMN and the H-PCRF over S9 based on PDN-Id and roaming agreements.

In the non-roaming case (Figure 5.1-1) the V-PCRF is not involved.

1. The GW(BBERF) is requested to either report an event or obtain QoS rules or both for a Gateway Control Session.

2. The GW(BBERF) sends a Gateway Control and QoS Rules Request to the PCRF and includes the new IP-CAN bearer establishment modes if changed. The information sent by the GW(BBERF) to the PCRF includes: a request for resource authorization and/or a report corresponding to a deployed Event Trigger.

3. If the GW(BBERF) is only requested to report an event, the GW(BBERF) acknowledges the step 1 by sending a result to the entity that triggered this procedure.

4. The PCRF initiated IP-CAN Session Modification Procedure may occur as the result of the Gateway Control and QoS Rules Request procedure, either to forward an Event Report to the GW(PCEF) or to issue new or revised PCC Rules and Event Triggers, or both an Event Report and a PCC Rules and Event Triggers provision.

5. If the GW(BBERF) asked for new QoS rules or IP-CAN-specific parameters need to be delivered back to the GW(BBERF) or both, the PCRF sends a Gateway Control and QoS Rules Reply to the GW(BBERF). This interaction may include QoS Rules and Event Triggers. In case 2a a charging ID may be provided together with QoS rules.

   If there are multiple BBFs associated with the IP-CAN session and the request in Step 2 is from a non-primary BBERF (see clause 6.2.1.5), only QoS rules corresponding to already activated PCC rules are included in the reply. If a request from a non-primary BBERF results in an authorization of a new QoS rule or to a modification of an existing QoS rules, the PCRF shall reject the request.

6. The QoS Rules and Event Triggers, if any, received by the GW(BBERF) are deployed. This will result in bearer binding being performed, according to the rules. This may result in the binding of additional SDFs or a change in

the binding of previously bound SDFs. Subsequent events corresponding to the Event Triggers will cause an Event Report to be delivered to the PCRF by means of a Gateway Control and QoS Rules Request procedure.

7. The GW(BBERF) initiates the IP-CAN Bearer signalling if required for the QoS Rules and Event Triggers deployed in step 6.

8. The GW(BBERF) receives the response for the IP-CAN Bearer signalling.

9. If the step 5 contained new and/or modified QoS Rules, the result of the QoS rule activation is returned to the PCRF, indicating whether the resources requested have been successfully allocated.

7.7.3.2 Event reporting for PCEF in visited network and locally terminated Gxx interaction

This procedure is only used for the event reporting for a PCEF in the visited network and when the Gxx interaction is locally terminated at the V-PCRF.

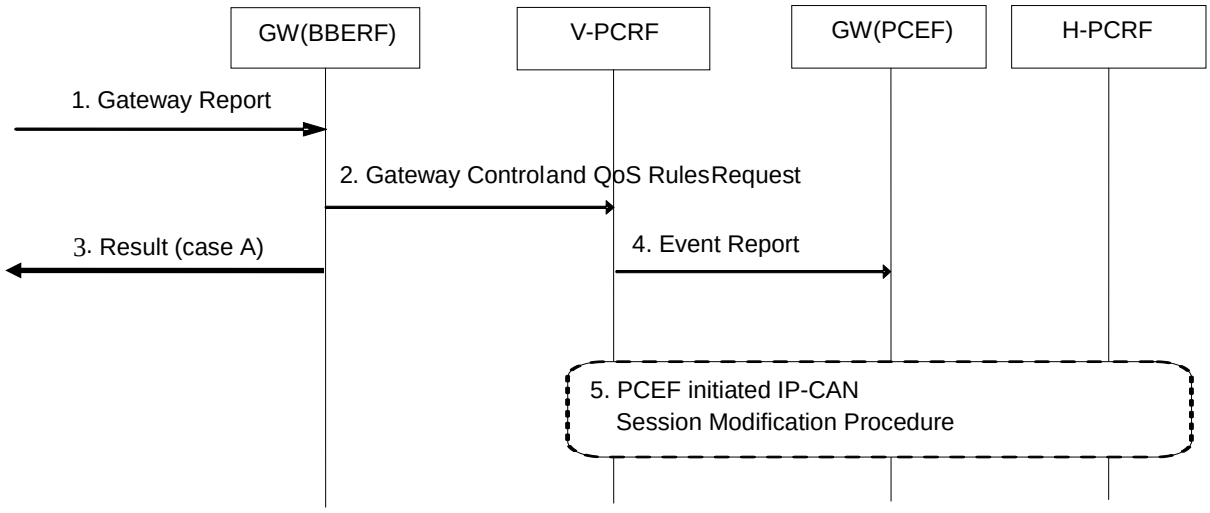

Figure 7.7.3-2: Event reporting for PCEF in visited network and locally terminated Gxx interaction

1. The GW(BBERF) is requested to report an event for a Gateway Control Session.

2. The GW(BBERF) sends a Gateway Control and QoS Rules Request to the V-PCRF and includes the new IP-CAN bearer establishment modes if changed. The information sent by the GW(BBERF) to the V-PCRF includes a report corresponding to a deployed Event Trigger.

3. Since the GW(BBERF) is only requested to report an event, the GW(BBERF) acknowledges the message received in step 1 by sending a result message to the entity that triggered this procedure.

4. The V-PCRF forwards the report corresponding to a deployed Event Trigger to the PCEF.

5. A PCEF initiated IP-CAN Session Modification Procedure may occur as the result of the received report, either to forward the report about the relevant deployed Event Trigger(s) to the H-PCRF or to request new or revised PCC Rules and Event Triggers, or both.

7.7.4 Gateway Control and QoS Rules Provision

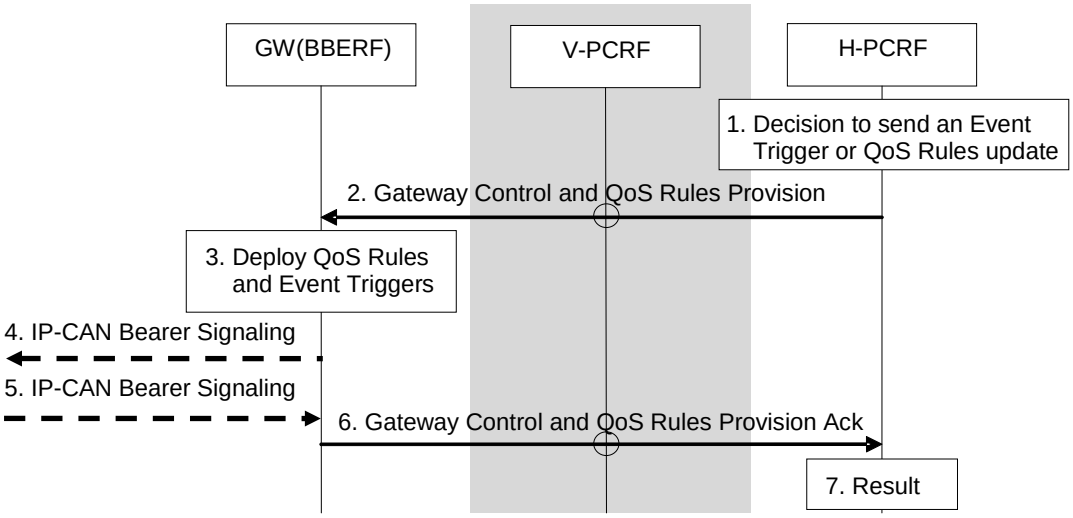

Figure 7.7.4-1: Gateway Control and QoS Rules Provision

This procedure concerns both roaming and non-roaming scenarios. In the roaming case when a Gateway Control Session is used, the V-PCRF should proxy the Gateway Control and QoS Rules Provision between the BBERF in the VPLMN and the H-PCRF over S9 based on PDN-Id and roaming agreements.

In the non-roaming case (Figure 5.1-1) the V-PCRF is not involved.

1. The PCRF is requested to update the QoS Rules and Event triggers for a Gateway Control Session.

2. The PCRF sends a Gateway Control and QoS Rules Provision to the GW(BBERF). It will include QoS Rules and Event Triggers. In case 2a a charging ID may be provided together with QoS rules. If the service data flow is tunnelled at the BBERF, the information about the mobility protocol tunnelling encapsulation header may be included. It is also possible that this interaction includes an Event Report originating from the GW(PCEF) and relayed by the PCRF to the BBERF. This Event Report enables a GW(PCEF)-originating interaction to be sent by way of the PCC infrastructure to the BBERF in situations that communication is needed between the GW(PCEF) and the GW(BBERF) and no interface exists between the GWs.

3. The QoS Rules and Event Triggers received by the GW(BBERF) are deployed. This may result in bearer binding being performed, according to the rules. Subsequent events corresponding to the Event Triggers will cause an Event Report to be delivered to the PCRF by means of a Gateway Control and QoS Rules Request procedure.

4. The GW(BBERF) initiates the IP-CAN Bearer signalling if required for the QoS Rules and Event Triggers deployed in step 3.

5. The GW(BBERF) receives the response for the IP-CAN Bearer signalling.

6. The GW(BBERF) sends a Gateway Control and QoS Rules Provision Ack (Result) to the PCRF. The Result information element indicates whether the indicated QoS Rules could be implemented.

7. The PCRF has completed updating the session and can continue with the activity that prompted this procedure.

   If there are multiple BBFs associated with the IP-CAN session (see clause 6.2.1.5), then the processing of the response is as follows depending on whether the BBERF is a primary BBERF or a non-primary BBERF:

   - If a primary-BBERF reports failure to install a QoS rule in Step 4, the PCRF also removes the same QoS rule from the non-primary BBERF(s) if any. The PCRF also removes the corresponding PCC rule from the PCEF.

   - If a non-primary BBERF reports failure to install a QoS rule, the PCRF updates the enforcement status of the QoS rule for that particular BBERF in its record but does not perform any further action.

7.7.5 Void

7.8 Change in subscription for MPS priority services

Once the PCRF receives a notification of a change in MPS EPS Priority, MPS Priority Level and/or IMS Signalling Priority from the SPR, the PCRF shall make the corresponding policy decisions (i.e. ARP and/or QCI change) and initiates the necessary IP-CAN session modification procedure(s) to apply the change.

7.9 Procedures over Sy reference point

7.9.1 Initial Spending Limit Report Request

This clause describes the signalling flow for the H-PCRF to request the status of the policy counters available at the OCS, and to subscribe to spending limit reporting (i.e. to notifications of policy counter status changes) by the OCS. If the H-PCRF provides the list of policy counter identifier(s), the OCS returns the policy counter status per policy counter identifier provided by the PCRF. If the H-PCRF does not provide the list of policy counter identifier(s), the OCS returns the policy counter status of all policy counter(s), which are available for this subscriber.

The Initial Spending Limit Report Request includes all subscriber Identifiers associated with the UE available at the PCRF.

NOTE: In case the OCS returns the status of all available policy counters some of these may not be relevant for a policy decision (e.g. those used in a policy decision only when roaming).

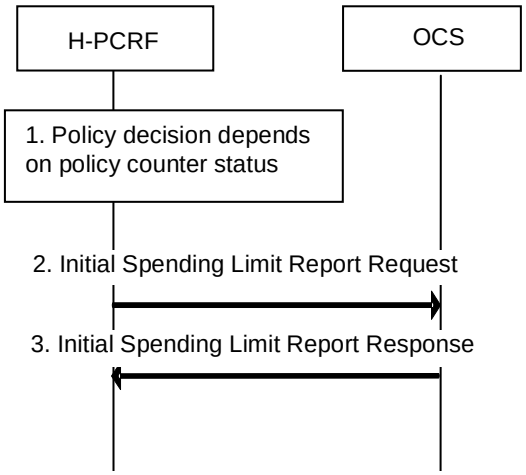

Figure 7.9.1: Initial Spending Limit Report Request

1. The H-PCRF retrieves subscription information that indicates that policy decisions depend on the status of policy counter(s) held at the OCS and optionally the list of policy counter identifier(s).

2. The H-PCRF sends an Initial Spending Limit Report Request if this is the first time policy counter status information is requested for the user and the PDN connection. It includes in the request: the subscriber ID (e.g. IMSI) and , optionally, the list of policy counter identifier(s).

3. The OCS sends an Initial Spending Limit Report Response that contains a policy counter status, and optionally pending policy counter statuses and their activation times, per required policy counter identifier and stores the H-PCRF's subscription to spending limit reports for these policy counters. If no policy counter identifier(s) was provided the OCS returns the policy counter status, optionally including pending policy counter statuses and their activation times, for all policy counter(s), which are available for this subscriber and stores the H-PCRF's subscription to spending limit reports of all policy counters provided to the H-PCRF. Otherwise, the OCS returns the policy counter status of all policy counter(s), which are available for this subscriber.

7.9.2 Intermediate Spending Limit Report Request

This clause describes the signalling flow for the H-PCRF to request the status of additional policy counters available at the OCS or to unsubscribe from spending limit reporting. If the H-PCRF provides the list of policy counter identifier(s), the OCS returns the policy counter status per policy counter identifier provided by the PCRF.

NOTE: In case the OCS returns the status of all available policy counters some of these may not be relevant for a policy decision, (e.g. those used in a policy decision only when roaming).

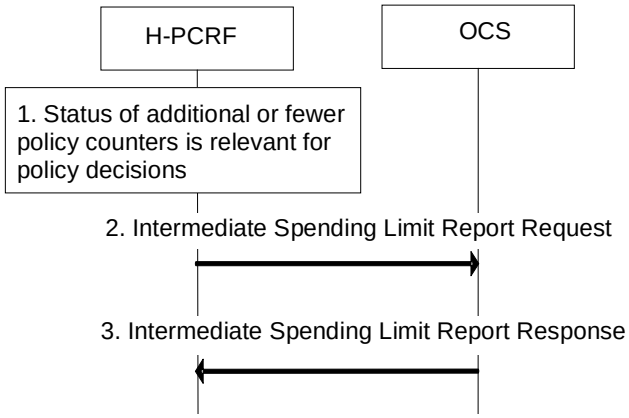

Figure 7.9.2: Intermediate Spending Limit Report Request

1. The H-PCRF determines that policy decisions depend on the status of additional policy counter(s) held at the OCS or that notifications of policy counter status changes for some policy counters are no longer required.

2. The H-PCRF sends an Intermediate Spending Limit Report Request, optionally including in the request an updated list of policy counter identifier(s).

3. The OCS sends the Intermediate Spending Limit Report Response that contains the policy counter status, and optionally pending policy counter statuses and their activation times, per required policy counter identifier, and stores or removes the H-PCRF's subscription to spending limit reporting by comparing the updated list with the existing H-PCRF subscriptions. If no policy counter identifier(s) was provided, the OCS returns the policy counter status, optionally including pending policy counter statuses and their activation times, for all policy counter(s), which are available for this subscriber and stores the H-PCRF's subscription to spending limit reports of all policy counters provided to the H-PCRF.

7.9.3 Final Spending Limit Report Request

This clause describes the signalling flow for the H-PCRF to cancel the subscriptions to status changes for the policy counters available at the OCS.

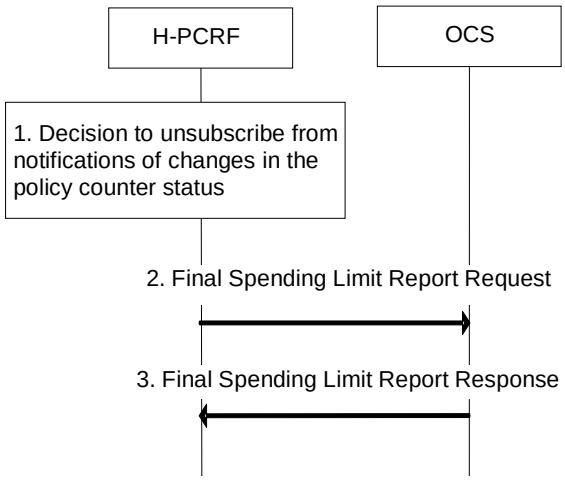

Figure 7.9.3: Final Spending Limit Report Request

1. The H-PCRF decides that notifications of policy counter status changes are no longer needed.
2. The H-PCRF sends a Final Spending Limit Report Request to the OCS to cancel the subscription to notifications of policy counter status changes from the OCS.
3. The OCS removes the H-PCRF's subscription to spending limit reporting and acknowledges the request by sending the Final Spending Limit Report Response to the H-PCRF.

7.9.4 Spending Limit Report

This clause describes the signalling flow for the OCS to notify the change of the status of the subscribed policy counters available at the OCS for that subscriber. Alternatively, the signalling flow can be used by the OCS to provide one or more pending statuses for a subscribed policy counter together with the time they have to be applied.

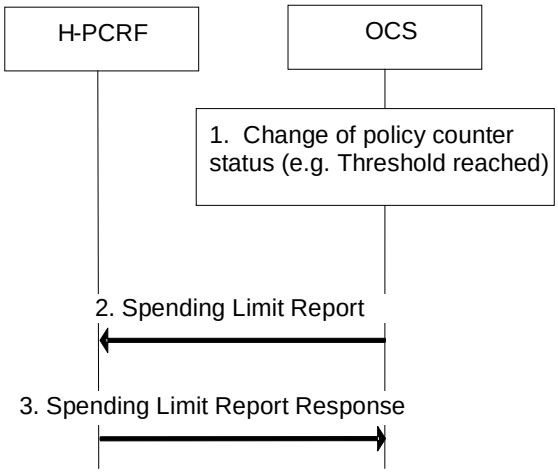

Figure 7.9.4: Spending Limit Report

1. The OCS detects that the status of a policy counter(s) has changed and the PCRF subscribed to notifications of changes in the status of this policy counter. Alternatively, the OCS may detect that a policy counter status will change at a future point in time, and decides to instruct the PCRF to apply one or more pending statuses for a requested policy counter.
2. The OCS sends the policy counter status, and optionally pending policy counter statuses and their activation times, for each policy counter that has changed and for which the H-PCRF subscribed to spending limit

reporting. Alternatively, the OCS sends one or more pending statuses for any of the subscribed policy counters together with the time they have to be applied.

3. The H-PCRF acknowledges the Spending Limit Report and takes that information into account as input for a policy decision.

Annex A (normative): Access specific aspects (3GPP)

A.1 GPRS

A.1.0 General

The GPRS IP-CAN employs, for an IP-CAN session, the concept of PDP contexts in order to provide an information transmission path of defined capacity (QoS). For GPRS, the IP-CAN bearer is the PDP context.

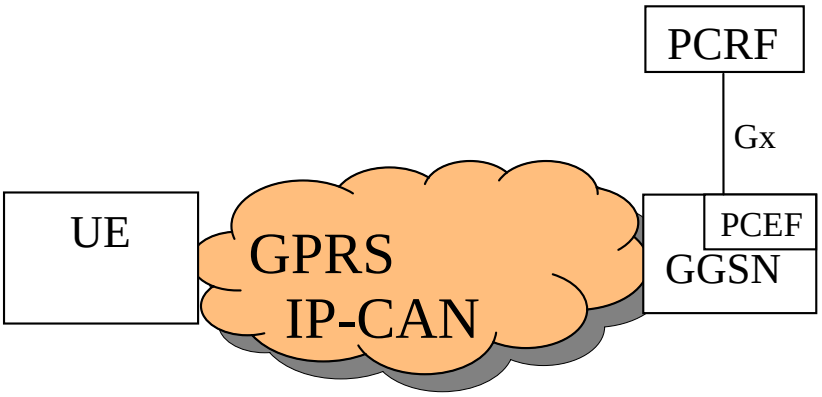

Figure A.1: The GPRS IP-CAN

A.1.1 High level requirements

A.1.1.1 General

A.1.1.2 Charging related requirements

It shall be possible for the charging system to select the applicable rate based on:

- SGSN IP address that is used by the GTP control plane for the handling of control messages.
- location with the granularity as specified for the credit re-authorization trigger Location change in clause A.1.3.1.3;
- User CSG Information, including CSG ID, access mode and CSG membership indication;
- RAT type.

A.1.1.3 Policy control requirements

IP-CAN Bearer QoS control allows the PCC architecture to control the "Authorized QoS" of a PDP context. Criteria such as the QoS subscription information may be used together with service-based, subscription-based, or a predefined PCRF internal policies to derive the "Authorized QoS" of a PDP context.

NOTE: If the PCRF provides authorized QoS for both the IP-CAN bearer and PCC rule(s), the enforcement of authorized QoS of the individual PCC rules takes place first.

A.1.1.4 QoS control

For GPRS IP-CANs it shall be possible to apply QoS control at APN-level.

QoS control per APN allows the PCC architecture to control the authorized APN-AMBR to be enforced for the total bandwidth usage of non-GBR QCIs at the PCEF within the same APN.

NOTE: For the enforcement of the APN-AMBR for all IP-CAN sessions to the same APN, the IP-CAN is required to select the same PCEF for all of them.

A.1.2 Architecture model and reference points

A.1.2.1 Reference points

A.1.2.1.1 Gx reference point

The Gx reference point enables the signalling of PCC rules, which govern the PCC behaviour, and it supports the following GPRS-specific functions:

- Indication of PDP context activation, modification and deactivation.

A.1.2.2 Reference architecture

In the GPRS IP-CAN, the Bearer Binding and Event Reporting Function (BBERF) does not apply.

A.1.3 Functional description

A.1.3.1 Overall description

A.1.3.1.1 Binding mechanism

A.1.3.1.1.0 General

As explained in clause 6.1.1, the binding mechanism is performed in three different steps: session binding, PCC rule authorization and bearer binding. Session binding has no GPRS specifics.

For the authorization of a PCC rule with a GBR QCI the PCRF shall assign a GBR value within the limit supported by the serving network.

NOTE: For the authorization of PCC Rules with the same QCI the PCRF may also check that aggregated GBR is within the limits supported by the serving network to minimize the risk of rejection of the bearer by the serving network.

For the GPRS case bearer binding is performed by:

- PCRF, when the selected operation mode is UE-only, see TS 23.060 [12], either due to PCRF decision or network/UE capability;

- PCRF and PCEF (i.e. the PCRF performs the binding of the PCC rules for user controlled services while the PCEF performs the binding of the PCC rules for the network controlled services), when the selected operation mode is UE/NW.

The bearer binding performed by the PCRF shall bind a PCC rule that is authorized for a TFT packet filter to the PDP context the TFT packet filter has been assigned by the UE if the PCC rule can be authorized for the QCI of the PDP context. If a new PDP context is established, the PCRF can also bind PCC rule(s) to the PDP context if the QCI of the PDP context is different from the QCI, the PCC rule(s) can be authorized for since the PCRF can modify the QCI of the new PDP context. The binding mechanism shall comply with the established traffic flow template (TFT) packet filters (for the whole IP-CAN session).

The bearer binding performed by the PCEF shall compare the PCC rule QoS parameters with the PDP context QoS parameters and bind a PCC rule:

- to a candidate PDP context with a matching QoS class and Evolved ARP (if this is supported by the SGSN);
- to a candidate PDP context with a matching QoS class and Evolved ARP (if this is supported by the SGSN) that, after modification of the bitrates, fulfils the PCC rule QoS demands;
- to a new PDP context with a matching QoS class and Evolved ARP (if this is supported by the SGSN), if there is no suitable candidate PDP context present.

The bearer binding mechanism associates the PCC rule with the PDP context to carry the service data flow. The association shall:

- cause the downlink part of the service data flow to be directed to the PDP context in the association, and
- assume that the UE directs the uplink part of the service data flow to the PDP context in the association.

Thus, the detection of the uplink part of a service data flow shall be active on the PDP context, which the downlink packets of the same service data flow is directed to. The detection of the uplink part of the service data flow may be active, in parallel, on any number of additional PDP contexts.

A.1.3.1.1.1 Bearer binding mechanism allocated to the PCEF

When the bearer binding mechanism is allocated to the PCEF, no per bearer information is required to be communicated over the Gx reference point.

Once the PCRF has provided the PCC rule decisions at the IP-CAN session establishment procedure, the PCRF shall provide further PCC rule decisions

- using the PCRF initiated IP-CAN Session Modification procedure; or
- in response to an event report from the PCEF (the GW(PCEF) initiated IP-CAN Session Modification).

The bearer binding function shall not combine PCC rules with different ARP values onto the same PDP context.

NOTE: If Evolved ARP is not supported by the SGSN then this enables a modification of the PDP context ARP without impacting the bearer binding after relocation to a SGSN that supports Evolved ARP.

A.1.3.1.1.2 Bearer binding mechanism allocated to the PCRF

If a PDP context is established/modified in order to successfully perform the bearer binding the PCRF will set the PCC rule as binding-pending status until the PCEF reports the establishment or modification of a PDP context that fulfils the PCC rule demands or the PCC rule is removed.

The following particularities apply when the bearer binding mechanism is allocated to the PCRF:

- The PCEF
  - shall include a bearer reference in all requests for PCC decisions;
  - shall report bearer QoS class identifier and the associated bitrates for new/modified PDP contexts;
  - shall report the TFT filter status for new PDP contexts and for modified TFTs;
  - shall report the deactivation of a PDP context
- The PCRF
  - shall provide the bearer reference for the binding result when activating a PCC rule;
  - shall arm the GPRS-specific IP-CAN event trigger "PDP context activity".
- shall arm the event trigger "traffic mapping information change".

NOTE: For the above case, the allocation of the bearer binding mechanism to the PCRF facilitates the migration from Rel-6 products to Rel-7 products. The allocation of the binding mechanism may be re-evaluated in future releases.

When the PCRF performs the bearer binding the ARP information in the PCC rule shall be ignored unless the SGSN has indicated support for Evolved ARP.

A.1.3.1.2 Reporting

A container may be closed and a new container opened by the triggering of event triggers.

A.1.3.1.3 Credit management

For GPRS the PCEF shall initiate one credit management session for each PDP context.

For GPRS the credit re-authorisation triggers in table A.1 shall apply in addition to the ones in table 6.1.

Table A.1: GPRS specific credit re-authorization triggers

Credit re-authorization trigger	Description
SGSN change	The UE has moved to a new SGSN.
RAT type change.	The characteristics of the air interface, communicated as the radio access type, have changed.
Location change (routeing area)	The routeing area of the UE has changed.
Location change (CGI/SAI)	The CGI/SAI of the UE has changed.
User CSG Information change in CSG cell	User CSG Information has changed when the UE enters/leaves/accesses via a CSG cell
User CSG Information change in subscribed hybrid cell	User CSG Information has changed when the UE enters/leaves/accesses via a hybrid cell in which the subscriber is a CSG member
User CSG Information change in un-subscribed hybrid cell (see note)	User CSG Information has changed when the UE enters/leaves/accesses via a hybrid cell in which the subscriber is not a CSG member
NOTE: Due to the increased signalling load, such reporting should be applied for a limited number of subscribers only.	

If the Location change trigger for CGI / SAI or RAI is armed, the GGSN should request the SGSN to report any changes in location to the level indicated by the trigger according to the procedures described in TS 23.060 [12]. If credit re-authorization triggers and event triggers require different levels of reporting of location change for different PDP contexts for a single IP-CAN session, the SGSN reports location changes to the highest level of detail required. However, the GGSN should not trigger a credit re-authorization if the report received is more detailed than requested by the OCS.

If the User CSG Information change in CSG cell trigger is armed, the GGSN should request the SGSN to report any changes in user CSG information when the UE enters/leaves/accesses via a CSG cell.

If the User CSG Information change in subscribed hybrid cell trigger is armed, the GGSN should request the SGSN to report any changes in user CSG information when the UE enters/leaves/accesses via a hybrid cell in which the subscriber is a CSG member.

If the User CSG Information change in un-subscribed hybrid cell trigger is armed, the GGSN should request the SGSN to report any changes in user CSG information when the UE enters/leaves/accesses via a hybrid cell in which the subscriber is not a CSG member.

If credit re-authorization triggers and IP-CAN session related policy information require different levels of reporting of User CSG information for a single IP-CAN session, then the User CSG information to be requested from the SGSN should be changed to the highest level of detail required.

A.1.3.1.4 Event Triggers

For GPRS the event triggers in table A.2 shall apply in addition to the ones in table 6.2.

Table A.2: GPRS specific event triggers

Event trigger	Description
SGSN change	The UE has moved to a new SGSN.
RAT type change.	The characteristics of the air interface, communicated as the radio access type, has changed.
PDP Context Activity	The GGSN has received a request for a PDP context activation, modification or deactivation. Note 1.
Location change (routeing area)	The routeing area of the UE has changed.
Location change (CGI/SAI)	The CGI/SAI of the UE has changed.
Subscribed APN-AMBR change	The subscribed APN-AMBR has changed.
NOTE 1: Available only when the bearer binding mechanism is allocated to the PCRF.	

If the Location change trigger is armed, the GGSN should request the SGSN to report any changes in location to the level indicated by the trigger according to the procedures described in TS 23.060 [12]. If credit-authorization triggers and event triggers require different levels of reporting of location change for different PDP contexts for a single UE, the SGSN reports location changes to the highest level of detail required. However, the GGSN should not trigger a request for PCC rules if the report received is more detailed than requested by the PCRF.

For GPRS the traffic mapping information is represented by the TFT information.

For GPRS the loss/recovery of transmission resources is indicated by a PDP context modification changing the 'Maximum bitrate' UMTS QoS parameter to/from 0 kbit/s (as described in the PDP context preservation procedures in TS 23.060 [12]).

The User Location Report in the Access Network Information Reporting contains the CGI/SAI and when the PDP context is deactivated, information on when the UE was last known to be in that location.

A.1.3.1.5 Policy Control

For GPRS the AF instruction to report changes of the IP-CAN bearer level information Type of IP-CAN shall also result in a reporting of RAT type changes, even if the IP-CAN type is unchanged.

A.1.3.2 Functional entities

A.1.3.2.1 Policy Control and Charging Rules Function (PCRF)

A.1.3.2.1.0 General

The PCRF shall upon indication of PCC rule removal due to PS to CS handover notify the AF that the associated flows are no longer served by the PS-domain due to PS to CS handover.

A.1.3.2.1.1 Input for PCC decisions

The PCRF shall accept any of the following input which the PCEF may provide, specific for GPRS, as a basis for decisions on PCC rule operations.

The following information represents GPRS specific values of the ones listed in clause 6.2.1.1:

- Subscriber Identifier in the form of IMSI, MSISDN;
- A PDN identifier in the form of APN;
- A PLMN identifier in the form of SGSN Mobile Country Code and Mobile Network Code;
- Type of IP-CAN set to GPRS;
- IP-CAN bearer attributes in the form of:
  - Requested QoS, for a PDP context;
  - TFT, to enable the identification of the corresponding PDP Context;

- Location of the subscriber in the form of CGI/SAI or RAI.

The following information is in addition to the ones listed in clause 6.2.1.1:

- RAT type.
- Subscribed APN-AMBR.

The SPR may provide the following information for a subscriber (in addition to the information in clause 6.2.1.1) connecting to a specific PDN:

- Authorized APN-AMBR.

The Authorized APN-AMBR is derived by the PCRF from SPR interaction, according to operator policy.

A.1.3.2.2 Policy and Charging Enforcement Function (PCEF)

A.1.3.2.2.1 General

This functional entity is located in the GGSN. The GGSN provides the GPRS-specific bearer QoS handling.

The PCEF shall contact the PCRF based on PCRF address information that shall be configured for the access point name (APN) together with the IMSI or MSISDN (if needed).

The PCEF shall maintain a 1:1 mapping from the GPRS QoS Class Identifier to a UMTS QoS profile and vice versa. Each GPRS QoS Class Identifier (QCI) parameter value has a 1:1 mapping to a set of QoS parameters defined for GPRS, TS 23.107 [14]. A recommended mapping is listed in table A.3.

Table A.3: Recommended mapping for GPRS QoS Class Identifier to/from Release 99 UMTS QoS parameters

GPRS QoS Class Identifier value	UMTS QoS parameters			
	Traffic Class	THP	Signalling Indication	Source Statistics Descriptor
1	Conversational	n/a	n/a	speech (NOTE 1)
2	Conversational	n/a	n/a	unknown
3	Streaming	n/a	n/a	speech (NOTE 1)
4	Streaming	n/a	n/a	unknown
5	Interactive	1	Yes	n/a
6	Interactive	1	No	n/a
7	Interactive	2	No	n/a
8	Interactive	3	No	n/a
9	Background	n/a	n/a	n/a
NOTE 1: The operator's configuration should reserve QCI values that map to "speech" for service data flows consisting of speech (and the associated RTCP) only.				

NOTE 2: This table defines the mapping for GPRS QCI to/from UMTS QoS parameters for pre-Release 8 GPRS. The characteristics of GPRS QCIs are independent from the standardized QCI characteristics for EPS.

The PCEF determines Release 97/Release 98 attributes from Release 99 attributes according to TS 23.107 [14].

The remaining UMTS QoS parameters are subject to operator's policies and either provisioned in the Create PDP Context Request or locally defined in GGSN.

NOTE 3: Any change of the ARP parameter by the PCEF may get overwritten by the SGSN due to subscription enforcement unless the SGSN has indicated support for Evolved ARP.

For each PDP context, the PCEF shall accept information during bearer establishment and modification relating to:

- The user and terminal (e.g. MSISDN, IMEISV);

- Bearer characteristics (e.g. QoS negotiated, APN, IM CN Subsystem signalling flag);
- Network related information (e.g. MCC and MNC).

The PCEF shall use this information in the OCS request/reporting or request for PCC rules.

A GGSN may provide more than one APN for access to the same PDN. It should be possible to enable or disable PCC functionality for each APN, independent from the other APNs for access to the same PDN. Once the PCC functionality is disabled, regular GPRS charging and policy methods would be applied, i.e. no PCRF interaction would occur.

For each PDP context, there shall be a separate OCS request/OFCS reporting, so this allows the OCS and offline charging system to apply different rating depending on the PDP context.

The GGSN shall report the service data flow based charging data on a per PDP context basis.

The GGSN shall be able to request the SGSN to provide reports of changes in CGI/SAI/RAI of a UE as directed by the credit re-authorization triggers and/or event triggers.

The PCEF enforces QoS Policies as indicated by the PCRF in accordance to what is stated in clause 6.2.2.1 with the following additions:

- Authorized APN-AMBR enforcement. The PCEF shall enforce the authorized APN-AMBR received via the Gx interface for the total bandwidth usage of non-GBR QCI for the APN.

Only the GBR per bearer is used for resource reservation (e.g. admission control in the RAN).

The MBR (per PCC rule / per bearer) and the authorized APN-AMBR are used for rate policing.

When the GGSN is connected to a SGSN that does not support the Evolved ARP, the GGSN shall map the Evolved ARP to Rel-99 ARP parameter value as specified in Annex E of TS 23.401 [17].

A.1.3.2.2.2 Service data flow detection

For uplink traffic, in the case of GPRS, all the uplink parts of service data flows templates, which are associated with the PDP context are candidates for matching in the detection process.

NOTE: Service data flow templates, which are not associated with the PDP context the packet was received, are not candidates for matching (dashed in the figure).

A.1.3.2.2.3 Packet Routeing and Transfer Function

The PCEF performs the packet routeing and transfer functions as specified in TS 23.060 [12], with the differences specified in this clause.

For the PDP address of an UE, the PCEF routes downlink packets to the different PDP contexts based on the downlink parts of the service data flow templates, in the active PCC rules and their routeing associations to the PDP contexts. The association between an active PCC rule and a PDP context shall correspond to the downlink TFT received from the UE. Each active PCC rule shall have a single routeing association to a PDP context. Upon reception of a packet, the PCEF evaluates the downlink part of the service data flow templates of the PCC rules activated for the PDP address in order of precedence to find a match. When the first match is found, the packet is tunnelled to the SGSN via the PDP context, for which the PCC rule has the routeing association. If no match is found, the PCEF shall silently discard the packet.

The UE shall define TFTs that enable successful binding at the PCRF for service data flows requiring a binding to occur.

For each uplink packet, the UE should choose the PDP context that is used for the downlink direction of the same service data flow, as declared in the TFT information. The PCEF shall only apply the uplink parts of the service data flow templates of the PCC rules, which are associated with the same PDP context as the uplink packet arrived on.

The packet filters, to be applied on dedicated signalling PDP contexts, shall form PCC rules, which shall be granted higher precedence than any other PCC rule and be active on the dedicated signalling context.

A.1.3.2.2.4 Measurement

The details of measurement are specified in TS 32.251 [9].

A.1.3.2.3 Application Function (AF)

For GPRS the AF instruction to report changes of the IP-CAN bearer level information Type of IP-CAN will also result in a reporting of RAT type changes, even if the IP-CAN type is unchanged.

The AF instructions to report loss of transmission resources will result in a notification from the PCRF that may include an indication that the transmission resources are lost due to PS to CS handover.

NOTE: The AF action up to notification of termination of transmission resources due to PS to CS handover is application specific. IMS interprets that the PS to CS handover notification as SRVCC.

A.1.3.3 Policy and charging control rule

A.1.3.3.1 General

Void.

A.1.3.3.2 Policy and charging control rule operations

The PCRF associates, at activation, a PCC rule with a PDP context at the PCEF.

A.1.3.4 IP-CAN bearer and IP-CAN session related policy information

For GPRS the IP-CAN bearer and IP-CAN session related policy information in table A.4 shall apply in addition to the ones in table 6.4.

Table A.4: PCC related IP-CAN bearer and IP-CAN session related policy information

Attribute	Description	PCRF permitted to modify the attribute	Scope
User CSG Information change in CSG cell	Defines whether to report User CSG Information change when the UE enters/leaves/accesses via a CSG cell.	Yes	IP-CAN session
User CSG Information change in subscribed hybrid cell	Defines whether to report User CSG Information change when the UE enters/leaves/accesses via a hybrid cell in which the subscriber is a CSG member.	Yes	IP-CAN session
User CSG Information change in un-subscribed hybrid cell (see note)	Defines whether to report User CSG Information change when the UE enters/leaves/accesses via a hybrid cell in which the subscriber is not a CSG member.	Yes	IP-CAN session
NOTE: Due to the increased signalling load, such reporting should be applied for a limited number of subscribers only.			

If the User CSG Information change in CSG cell was provided under IP-CAN session related policy information, the GGSN should request the Serving Node to report any changes in user CSG information when the UE enters/leaves/accesses via a CSG cell.

If the User CSG Information change in subscribed hybrid cell was provided under IP-CAN session related policy information, the GGSN should request the Serving Node to report any changes in user CSG information when the UE enters/leaves/accesses via a hybrid cell in which the subscriber is a CSG member.

If the User CSG Information change in un-subscribed hybrid cell was provided under IP-CAN session related policy information, the GGSN should request the Serving Node to report any changes in user CSG information when the UE enters/leaves/accesses via a hybrid cell in which the subscriber is not a CSG member.

If credit re-authorization triggers and IP-CAN session related policy information require different levels of reporting of User CSG information for a single IP-CAN session, then the User CSG information to be requested from the Serving Node should be changed to the highest level of detail required.

The reporting of User CSG information to the OFCS shall be done on the level of detail as requested by the PCRF within IP-CAN session related policy information and the reporting of User CSG information to the OCS shall be done on the level of detail as requested by the OCS re-authorization triggers.

The authorized QoS per bearer (UE-initiated IP-CAN bearer activation/modification) and the authorized MBR per QCI (network initiated IP-CAN bearer activation/modification) shall be mapped by the PCEF to the GBR and MBR of the PDP context as described in clause 6.2.2.4. The mapping of the QCI to the UMTS QoS profile parameters is defined in clause A.1.3.2.2.1.

A.1.3.5 APN related policy information

For GPRS IP-CANs the PCRF provides the Authorized APN-AMBR that applies to all IP-CAN sessions for the same UE to the same APN to the GW using the PCC Rule provisioning procedure.

Table A.1.3.5-1 lists the applicable PCC specific APN related policy information.

Table A.1.3.5-1: PCC specific APN related policy information

Attribute	Description	PCRF permitted to modify the attribute	Scope
Authorized APN-AMBR	Defines the APN-AMBR for the total bandwidth usage of non-GBR QCIs at the APN.	Yes	All IP-CAN sessions for the same UE within the same APN

Upon every interaction with the GW, the PCRF may provide the Authorized APN-AMBR. The Authorized APN AMBR overrides any possible APN-AMBR stored in the PCEF.

A.1.4 PCC Procedures and flows

A.1.4.1 Introduction

For GPRS, the GW(PCEF) is the GGSN. The IP-CAN bearer is the PDP context and the IP-CAN Session is established by the Create PDP Context message. The IP-CAN Session is terminated when the last PDP Context of the specific IP address is deleted and the IP Address is released.

A.1.4.2 IP-CAN Session Establishment

The IP-CAN session establishment procedure (described in clause 7.2) is triggered at the GGSN by receiving a Create PDP Context Request message for the first PDP Context that is created for a new IP Address. The successful procedure results in an establishment of a UE IP Address and a PDP Context for the UE. The Create PDP Context Response message, indicating that a new PDP context is created, is sent to the SGSN. The response may include any changes in QoS according to bearer binding and policy enforcement.

During the PDP context activation procedure, it shall be possible to forward the network capability of reporting of changes in CGI/SAI/RAI to the PCRF.

The PCRF also includes the Authorized APN-AMBR in the IP-CAN Session Establishment Ack.

A.1.4.3 IP-CAN Session Termination

A.1.4.3.1 UE initiated IP-CAN Session termination

The UE initiated IP-CAN Session termination procedure (described in clause 7.3.1) is triggered at the GGSN by receiving a Delete PDP Context request message if this is the deletion of the last PDP Context for the IP Address or the Teardown Indicator in the Delete PDP Context Request indicates that all PDP contexts that share the same IP address

should be deactivated. All PDP Contexts in the IP-CAN Session are deleted in the GGSN. The IP Address of the UE is released. The Delete PDP Context Response message, indicating that the PDP context(s) is deleted, is sent to the SGSN.

A.1.4.3.2 GW initiated IP-CAN Session termination

The GW initiated IP-CAN Session termination procedure (described in clause 7.3.2) is triggered if the GGSN detects that the IP-CAN Session shall be terminated. The Delete PDP Context request message is sent by the GGSN to the SGSN.

This may be the deletion of the last PDP Context for the IP Address. If not, the GGSN shall set the Teardown Indicator in the Delete PDP Context Request message to indicate that all PDP contexts that share that same IP address shall also be deactivated. All PDP Contexts in the IP-CAN Session are deleted. The IP Address of the UE is released. The Delete PDP Context Response, indicating that the PDP context(s) is deleted, is received from the SGSN.

A.1.4.4 IP-CAN Session Modification

A.1.4.4.1 IP-CAN Session Modification; GW(PCEF) initiated

The GW(PCEF) initiated IP-CAN Session modification procedure (described in clause 7.4.1) is triggered at the GGSN by receiving one of the following messages:

- Create PDP Context Request message;
- Update PDP Context Request message;
- Delete PDP Context Request message;
- a Change Notification message (indicating the new CGI, SAI or RAI) – see TS 23.060 [12].

In case of a Create PDP Context Request message, the modification of the IP-CAN Session is the addition of a new PDP Context to the IP-CAN Session. The new PDP Context is added with specific QoS requirements and traffic mapping information (TFT). A Create PDP Context Response message, indicating that a new PDP context is created, is sent to the SGSN. The response may include any changes in QoS according to bearer binding and policy enforcement.

In case of an Update PDP Context Request, a PDP Context in the IP-CAN Session is modified. The modification may include modifying the QoS and/or the traffic mapping information. The Update PDP Context Response message, indicating that a PDP context is modified, is sent to the SGSN. The response may include any changes in QoS according to bearer binding and policy enforcement.

In case of a Delete PDP Context Request message, a PDP Context in the IP-CAN Session is deleted. The Delete PDP Context Response message, indicating that a PDP context is deleted, is sent to the SGSN. .If the PS to CS handover indicator is set in a Delete PDP context request message , the PCEF reports termination of transmission resources for associated PCC Rules due to PS to CS handover.

A Change Notification message indicating a change in CGI / SAI or RAI information is received when there are only changes regarding the current location of the UE. A change in CGI / SAI or RAI may also be notified within other session management messages.

The PCRF may provide the Authorized APN-AMBR in the Acknowledgement of the IP-CAN Session Modification to the GW (in addition to the parameters in clause 7.4.1).

Based on operator policy the PCRF may re-authorize MBR/APN-AMBR.

A.1.4.4.2 IP-CAN Session Modification; PCRF initiated

The PCRF initiated IP-CAN Session modification procedure (described in clause 7.4.2) may result in a GGSN initiated PDP Context Modification or Deactivation or a Network Requested secondary PDP Context Activation.

If a PDP Context in the IP-CAN Session needs to be modified, the GGSN sends an Update PDP Context Request message. The modification may include modifying the QoS negotiated, negotiated Evolved ARP or the required CGI/SAI/RAI change reporting. The Update PDP Context Response message, indicating that a PDP context is modified, will be received from the SGSN.

If a PDP Context in the IP-CAN Session needs to be deleted, the GGSN sends a Delete PDP Context Request message. The Delete PDP Context Response message will be received from the SGSN.

If the PCEF bearer binding yields that a new PDP context is required, the PCEF shall initiate the Network Requested secondary PDP Context Activation procedure.

NOTE: If online charging is applicable, with PCEF bearer binding and a new PDP Context is required, the PCEF may not have all the information (e.g. NSAPI and negotiated QoS) associated with that PDP context for the credit authorisation until the activation procedure is complete and therefore a second credit authorisation may be necessary to provide the remaining information.

The PCRF may provide the Authorized APN-AMBR in the Policy and Charging Rule Provision to the GW (in addition to the parameters in clause 7.4.2).

A.2 Void

A.3 Void

A.4 3GPP Accesses (GERAN/UTRAN/E-UTRAN) - GTP-based EPC

A.4.0 General

For 3GPP Access (GTP-based), architecture details are described in TS 23.401 [17] and in TS 23.060 [12].

Figure A.1: The 3GPP EPS IP-CAN (GTP-based)

A.4.1 High Level Requirements

A.4.1.1 Charging related requirements

It shall be possible for the charging system to select the applicable rate based on:

- Location with the granularity as specified for the credit re-authorization trigger Location change in clause A.4.3.1.1;

- User CSG Information, including CSG ID, access mode and CSG membership indication;
- RAT type.

A.4.1.2 QoS control

For 3GPP Access (GTP based) it shall be possible to apply QoS control at APN-level.

QoS control per APN allows the PCC architecture to control the authorized APN-AMBR to be enforced for the total bandwidth usage of non-GBR QCIs at the PCEF within the same APN.

NOTE: For the enforcement of the APN-AMBR for all IP-CAN sessions to the same APN, the IP-CAN is required to select the same PCEF for all of them.

A.4.2 Architectural Model and Reference Points

A.4.2.1 Reference architecture

In the 3GPP Access (GTP-based) architecture, see TS 23.401 [17] and in TS 23.060 [12],

- the Policy and Charging Enforcement Function (PCEF) is allocated to the PDN GW;
- the Bearer Binding and Event Reporting Function (BBERF) does not apply.

A.4.3 Functional Description

A.4.3.1 Overall description

A.4.3.1.1 Credit management

For EPS the credit re-authorisation triggers in table A.4.3-1 shall apply in addition to the ones in table 6.1.

Table A.4.3-1: EPS specific credit re-authorization triggers

Credit re-authorization trigger	Description
SGSN change	The UE has moved to a new SGSN. (Note 2)
Serving GW change	The UE has moved to a new Serving GW. (Note 1)
RAT type change.	The characteristics of the air interface, communicated as the radio access type, have changed.
Location change (routeing area)	The routeing area of the UE has changed. (Note 2)
Location change (tracking area)	The tracking area of the UE has changed. (Note 1)
Location change (ECGI)	The ECGI of the UE has changed.(Note 1)
Location change (CGI/SAI)	The CGI/SAI of the UE has changed.(Note 2)
User CSG Information change in CSG cell	User CSG Information has changed when the UE enters/leaves/accesses via a CSG cell
User CSG Information change in subscribed hybrid cell	User CSG Information has changed when the UE enters/leaves/accesses via a hybrid cell in which the subscriber is a CSG member
User CSG Information change in un-subscribed hybrid cell (see NOTE 3)	User CSG Information has changed when the UE enters/leaves/accesses via a hybrid cell in which the subscriber is not a CSG member
NOTE 1: These triggers are used for E-UTRAN access. NOTE 2: These triggers are used for GERAN/UTRAN accesses. NOTE 3: Due to the increased signalling load, such reporting should be applied for a limited number of subscribers only.	

If the Location change trigger for GERAN/UTRAN or E-UTRAN is armed, the PDN GW should request the Serving GW (then SGSN or MME specifically) to report any changes in location to the level indicated by the trigger according to the procedures described in TS 23.060 [12] or TS 23.401 [17].

If the User CSG Information change in CSG cell trigger is armed, the PDN GW should request the Serving GW (then SGSN or MME specifically) to report any changes in user CSG information when the UE enters/leaves/accesses via a CSG cell.

If the User CSG Information change in subscribed hybrid cell trigger is armed, the PDN GW should request the Serving GW (then SGSN or MME specifically) to report any changes in user CSG information when the UE enters/leaves/accesses via a hybrid cell in which the subscriber is a CSG member.

If the User CSG Information change in un-subscribed hybrid cell trigger is armed, the PDN GW should request the Serving GW (then SGSN or MME specifically) to report any changes in user CSG information when the UE enters/leaves/accesses via a hybrid cell in which the subscriber is not a CSG member.

If credit re-authorization triggers and IP-CAN session related policy information require different levels of reporting of User CSG information for a single IP-CAN session, the User CSG information to be requested from the Serving Nodes should be changed to the highest level of detail required.

A.4.3.1.2 Event Triggers

For EPS the event triggers in table A.4.3-2 shall apply in addition to the ones in table 6.2.

Table A.4.3-2: EPS specific event triggers

Event trigger	Description	Reported from	Condition for reporting
SGSN change	The UE has moved to a new SGSN. (Note 2)	PCEF	PCRF
Serving GW change	The UE has moved to a new Serving GW. (Note 1)	PCEF	PCRF
RAT type change.	The characteristics of the air interface, communicated as the radio access type, has changed.	PCEF	PCRF
Location change (routeing area)	The routeing area of the UE has changed.	PCEF	PCRF
Location change (tracking area)	The tracking area of the UE has changed. (Note 1)	PCEF	PCRF
Location change (ECGI)	The ECGI of the UE has changed.(Note 1)	PCEF	PCRF
Location change (CGI/SAI)	The CGI/SAI of the UE has changed.(Note 2)	PCEF	PCRF
Subscribed APN-AMBR change	The subscribed APN-AMBR has changed	PCEF	Always set
EPS Subscribed QoS change	The QoS of the default EPS bearer has changed.	PCEF	Always set
NOTE 1: These triggers are used for E-UTRAN access. NOTE 2: These triggers are used for GERAN/UTRAN accesses.			

If the Location change trigger is armed, the PDN GW should request the Serving GW (then SGSN or MME specifically) to report any changes in location to the level indicated by the trigger according to the procedures described in TS 23.060 [12] or TS 23.401 [17].

The User Location Report in the Access Network Information Reporting contains the ECGI and when the bearer is deactivated, information on when the UE was last known to be in that location.

A.4.3.1.3 Binding mechanism

As explained in clause 6.1.1, the binding mechanism is performed in three steps: Session Binding, PCC Rule authorization and Bearer Binding.

Session Binding has no 3GPP Access (GTP-based) specifics.

For the authorization of a PCC rule with a GBR QCI the PCRF shall assign a GBR value within the limit supported by the serving network.

NOTE 1: For the authorization of PCC Rules with the same QCI the PCRF may also check that aggregated GBR is within the limits supported by the serving network to minimize the risk of rejection of the bearer by the serving network.

For the 3GPP Access (GTP-based) the Bearer Binding is performed by the PCEF. For GERAN/UTRAN in UE-only mode the Bearer Binding mechanism is restricted by the UE provided binding between a SDF and a bearer for UE initiated resource requests.

The bearer binding mechanism associates the PCC Rule with the EPS bearer to carry the service data flow. The association shall:

- cause the downlink part of the service data flow to be directed to the EPS bearer in the association; and
- assume that the UE directs the uplink part of the service data flow to the EPS bearer in the association.

Thus, the detection of the uplink part of a service data flow shall be performed on the EPS bearer over which the downlink packets of the same service data flow is directed to.

NOTE 2: For GERAN/UTRAN in UE-only mode the detection of the uplink part of the service data flow may be active, in parallel, on any number of EPS bearers.

When the PDN GW is connected to an SGSN via Gn/Gp (and thus a handover from UTRAN/GERAN to E-UTRAN is possible), the bearer binding in the PCEF shall not combine PCC rules with different ARP values onto the same PDP context. For the UE-only mode (which is based on a UE provided binding) PCC rules with different ARP values shall not be authorized for the same PDP context.

NOTE 3: If Evolved ARP is not supported by the SGSN then this enables a modification of the EPS bearer ARP without impacting the service assignment after a handover to E-UTRAN or after relocation to a S4-SGSN or a Gn/Gp SGSN that supports Evolved ARP.

A.4.3.1.4 Policy Control

For 3GPP Access (GTP based) the policy control functionalities should include the following functionality for QoS control (in addition to the functionalities listed in clause 6.1.5):

- Authorization and enforcement of the maximum QoS that is authorized for the total bandwidth usage of non-GBR QCIs at an APN.
- Authorization and enforcement of the maximum QoS allocated to the Default EPS bearer. The Default EPS bearer shall have a non-GBR QCI as defined in TS 23.401 [17], clause 4.7.2.1.

A.4.3.2 Functional Entities

A.4.3.2.1 Policy Control and Charging Rules Function (PCRF)

The following information represents 3GPP EPS specific values of the ones listed in clause 6.2.1.1:

- Type of IP-CAN is set to 3GPP-EPS.

The PCEF may provide the following information (in addition to the information in clause 6.2.1.1):

- Subscribed APN-AMBR;
- Default EPS Bearer QoS.

The SPR may provide the following information for a subscriber (in addition to the information in clause 6.2.1.1) connecting to a specific PDN:

- Authorized APN-AMBR for 3GPP Access;
- Authorized Default EPS Bearer QoS.

The Authorized APN-AMBR and the Authorized Default EPS Bearer QoS are derived by the PCRF from SPR interaction, according to operator policy.

The PCRF shall upon indication of PCC rule removal due to PS to CS handover notify the AF that the associated flows are no longer served by the PS-domain due to PS to CS handover.

If vSRVCC is supported in the serving network, the PCRF (V-PCRF if roaming) provides an indicator via Gx to the PCEF to indicate that vSRVCC is allowed for the flow corresponding to the video component of the voice/video call.

The PCRF shall provide SDF filters in the PCC rule as received in the packet filter information from the PCEF.

If the PCRF receives a request for addition of service data flow(s) with a reference to existing SDF filter identities (and by that to existing PCC rule(s)), the PCRF shall use the QCI or ARP of the existing PCC rule for the new service data flow(s).

NOTE: The reference to existing SDF filter identities informs the PCRF that the request is confined to an existing bearer, having bearer bindings with PCC rules that have the same QCI/ARP combination. Assigning a different QCI or ARP to the new SDFs would cause the procedure to fail, since the PCEF cannot map the new SDFs to another bearer.

A.4.3.2.2 Policy and Charging Enforcement Function (PCEF)

In the 3GPP Access (GTP-based) architecture the PCEF enforce QoS Policies as indicated by the PCRF in accordance to what is stated in clause 6.2.2.1 with the following additions:

- Authorized APN-AMBR enforcement. The PCEF shall enforce the authorized APN-AMBR received via the Gx interface for the total bandwidth usage of non-GBR QCI for the APN.
- Authorized Default EPS Bearer QoS Enforcement. The PCEF receives the authorized QoS for the default bearer over Gx interface. The PCEF enforces it which may lead to the upgrade or downgrade of the default EPS Bearer QoS.

When the PDN GW is connected via Gn/Gp (and thus handover from UTRAN/GERAN to E-UTRAN is possible), the PDN-GW shall map QoS parameters of EPS bearers and APN-AMBR (if not received via Gn/Gp) to/from Release 99 and Release 97/Release 98 QoS parameter values of PDP-contexts as specified in Annex E of TS 23.401 [17]. The PDN GW shall mediate Gn/Gp procedures so that PCRF experiences no difference compared to S5/S8 procedures.

Only the GBR per bearer is used for resource reservation (e.g. admission control in the RAN).

The MBR (per PCC rule / per bearer) and the authorized APN-AMBR are used for rate policing.

A.4.3.2.3 Application Function (AF)

The AF instructions to report loss of transmission resources will result in a notification from the PCRF that may include an indication that the transmission resources are lost due to PS to CS handover.

NOTE: The AF action up to notification of termination of transmission resources due to PS to CS handover is application specific. IMS interprets that the PS to CS handover notification as SRVCC.

A.4.3.3 APN related policy information

In the 3GPP Access (GTP-based) architecture the PCRF provides the Authorized APN-AMBR that applies to all IP-CAN sessions for the same UE to the same APN to the PDN GW using the PCC Rule provisioning procedure.

Table A.4.3-3 lists the applicable PCC specific APN related policy information.

Table A.4.3-3: PCC specific APN related policy information

Attribute	Description	PCRF permitted to modify the attribute	Scope
Authorized APN-AMBR	Defines the APN-AMBR for the total bandwidth usage of non-GBR QCIs at the APN.	Yes	All IP-CAN sessions for the same UE within the same APN

Upon every interaction with the PDN GW, the PCRF may provide the Authorized APN-AMBR. The Authorized APN-AMBR overrides any possible APN-AMBR stored in the PCEF.

A.4.3.4 IP-CAN bearer and IP-CAN session related policy information

For EPS the IP-CAN bearer and IP-CAN session related policy information in table A.4 shall apply in addition to the ones in table 6.4.

A.4.4 PCC Procedures and Flows

A.4.4.1 Introduction

For the 3GPP Access (GTP-based), an IP-CAN session is established by the Create Default Bearer message. The IP-CAN session is terminated when the last EPS bearer of the IP-CAN session is disconnected.

From the network scenarios listed in clause 7.1, the Case 1 (no Gateway Control Session) applies.

A.4.4.2 IP-CAN Session Establishment

In the case of IP-CAN Session Establishment (described in clause 7.2), the PCEF provides to PCRF (in addition to the parameters described in clause 7.2): the User Location Information, Serving Network, Serving-GW address and RAT type.

The PCRF includes, in the IP-CAN Session Establishment Ack, PCC Rules with QCI and ARP matching the Authorized Default EPS Bearer QoS, Authorized APN-AMBR and Authorized Default EPS Bearer QoS. If bearer establishment mode is UE/NW, the PCRF may also include PCC Rules requiring a QCI and ARP different from the Default Bearer QoS and for which NW mode applies.

A.4.4.3 GW(PCEF) initiated IP-CAN Session termination

The GW(PCEF) initiated IP-CAN Session termination procedure (described in clause 7.3.2) has no 3GPP specific information.

A.4.4.4 IP-CAN Session Modification

A.4.4.4.1 IP-CAN Session Modification; GW(PCEF) initiated

For IP-CAN session modification (described in clause 7.4.1) the PCEF includes the modification of any of the 3GPP specific information listed in clause A.4.4.2.

If the PS to CS handover indicator is set for an IP-CAN bearer that is deleted, the PCEF reports termination of transmission resources for associated PCC Rules due to PS to CS handover.

The PCRF may provide the following parameters in the Acknowledgement of the IP-CAN Session Modification to the PDN GW (in addition to the parameters in clause 7.4.1): Authorized APN-AMBR, Authorized Default EPS Bearer QoS.

A.4.4.4.2 IP-CAN Session Modification; PCRF initiated

The PCRF may provide the following parameters in the Policy and Charging Rule Provision to the PDN GW (in addition to the parameters in clause 7.4.2): Authorized APN-AMBR, Authorized Default EPS Bearer QoS.

A.5 3GPP Accesses (GERAN/UTRAN/E-UTRAN) - PMIP-based EPC

A.5.0 General

For 3GPP Access (PMIP-based), architecture details are described in TS 23.402 [18].

When PMIP-based S5/S8 has been deployed, the IP-CAN-specific parameter exchange occurs by means of IP-CAN Session Modification messages including the necessary information.

A.5.1 High Level Requirements

A.5.1.0 General

The same requirements as in clause A.4.1 apply for 3GPP Access (PMIP-based).

A.5.1.1 QoS control

For 3GPP Access (PMIP based) the same requirements as defined in clause A.4.1.2 apply.

A.5.2 Architectural Model and Reference Points

A.5.2.1 Reference architecture

In the 3GPP Access (PMIP-based) architecture, see TS 23.402 [18],

- the Policy and Charging Enforcement Function is allocated to the PDN GW;
- the Bearer Binding and Event Reporting Function (BBERF) is allocated to the Serving GW.

The Gxx applies and corresponds to the Gxc, as defined in TS 23.402 [18]. One Gateway Control Session corresponds to one IP-CAN session.

A.5.3 Functional Description

A.5.3.1 Overall Description

A.5.3.1.1 Binding mechanism

The same considerations as in clause A.4.3.1.3 apply with the following modifications:

- For the 3GPP Access (PMIP-based) the Bearer binding is performed by the BBERF.

A.5.3.1.2 Credit management

For 3GPP Access (PMIP-based EPC) the same credit re-authorisation triggers as defined in table A.4.3-1 apply.

A.5.3.1.3 Event triggers

For 3GPP Access (PMIP-based EPC) the same event triggers as defined in table A.4.3-2 apply. In addition, the event triggers in table A.5.3-1 apply at the BBERF at the request of the PCEF.

Table A.5.3-1: EPS BBERF specific event triggers

Event trigger	Description	Reported from	Condition for reporting
User CSG Information change in CSG cell	User CSG Information has changed when the UE enters/leaves/accesses via a CSG cell. (Note 1)	BBERF	PCEF
User CSG Information change in subscribed hybrid cell	User CSG Information has changed when the UE enters/leaves/accesses via a hybrid cell in which the subscriber is a CSG member. (Note 1)	BBERF	PCEF
User CSG Information change in un-subscribed hybrid cell (see note)	User CSG Information has changed when the UE enters/leaves/accesses via a hybrid cell in which the subscriber is not a CSG member. (Note 1)	BBERF	PCEF
NOTE 1: Due to the increased signalling load, such reporting should be applied for a limited number of subscribers only.			

If the User CSG Information change in CSG cell was provided as event trigger, the BBERF should report any changes in user CSG information when the UE enters/leaves/accesses via a CSG cell.

If the User CSG Information change in subscribed hybrid cell was provided as event trigger, the BBERF should report any changes in user CSG information when the UE enters/leaves/accesses via a hybrid cell in which the subscriber is a CSG member.

If the User CSG Information change in un-subscribed hybrid cell was provided as event trigger, the BBERF should report any changes in user CSG information when the UE enters/leaves/accesses via a hybrid cell in which the subscriber is not a CSG member.

NOTE: PCRF is responsible for setting the event triggers to the highest level of detail required in case different levels of User CSG information reporting are required for a single IP-CAN session.

A.5.3.2 Functional Entities

A.5.3.2.1 Policy Control and Charging Rules Function (PCRF)

For 3GPP Access (PMIP based) the same requirements as defined in clause A.4.3.2.1 apply with the following modification:

- Default EPS Bearer QoS and Subscribed APN-AMBR are provided by the BBERF.

For 3GPP Access (PMIP based), the PCRF receives information about supported bearer establishment modes from the PCEF and provides the bearer establishment mode to be used to the PCEF, i.e. in the same way as for 3GPP Access (GTP based).

A.5.3.2.2 Policy and Charging Enforcement Function (PCEF)

For 3GPP Access (PMIP based) the same requirements as defined in clause A.4.3.2.2 apply with the following modification:

- For the 3GPP Access (PMIP-based) the enforcement of the Authorized Default EPS Bearer QoS is not performed by the PCEF.

A.5.3.2.3 Bearer Binding and Event Reporting Function (BBERF)

In the 3GPP Access (PMIP-based) the BBERF enforces QoS Policies as indicated by the PCRF in accordance to what is stated in clause 6.2.7.3 with the following additions:

- Authorized Default EPS Bearer QoS Enforcement. The BBERF receives the authorized QoS for the default bearer over Gxx interface. The BBERF enforces it which may lead to the upgrade or downgrade of the default EPS Bearer QoS.

A.5.3.3 Void

A.5.3.4 APN related policy information

For 3GPP Access (PMIP based) the same requirements as defined in clause A.4.3.3 apply.

A.5.3.5 IP-CAN bearer and IP-CAN session related policy information

For 3GPP Access (PMIP based) the same requirements as defined in clause A.4.3.4 apply.

A.5.4 PCC Procedures and Flows

A.5.4.1 Introduction

For the 3GPP Access (PMIP-based), the IP-CAN session is established by the Proxy Binding Update message to the PDN-GW. The IP-CAN session is terminated when the PMIP session is terminated.

From the network scenarios listed in clause 7.1, the Case 2b applies.

A.5.4.2 Gateway Control Session Establishment

For the Gateway Control Session Establishment Procedure (see clause 7.7.1), the Serving GW includes the following additional information in the Gateway Control Session Establishment message (in addition to the parameters described in clause 7.7.1): User Location Information, user GSG information, (if received from the MME), Serving-GW address, Serving Network, RAT Type, Default EPS Bearer QoS and if available the APN-AMBR are provided to the PCRF.

The PCRF includes, in the Acknowledge Gateway Control Session Establishment (in addition to the parameters described in clause 7.7.1): QoS Rules with QCI and ARP matching the Default EPS Bearer QoS. If the bearer establishment mode is UE/NW, the PCRF may also include QoS Rules requiring a QCI and ARP different from the Default EPS Bearer QoS and for which NW mode applies.

In support of PDP Context Activation procedures over S4, the BBERF must indicate various session parameters, e.g. the RAT type, to the PCRF.

The PCRF may provide the following parameters in the Acknowledgement of the Gateway Control Session Establishment to the Serving GW (in addition to the parameters described in clause 7.7.1): Authorized APN-AMBR, Authorized Default EPS Bearer QoS.

If the PS to CS handover indicator is set for an IP-CAN bearer that is deleted, the BBERF reports termination of transmission resources for associated QoS Rules due to PS to CS handover.

A.5.4.3 Gateway Control and QoS Rules Request

In the case of Gateway Control and QoS Rules Request (described in clause 7.7.3) the BBERF includes the addition/modification/removal of any the 3GPP specific information listed in clause A.5.4.2.

When a change of RAT without S-GW relocation occurs, the BBERF signals the RAT type change as a parameter in an event report sent from the BBERF to the PCRF. An event report is the then sent, indicating the RAT type change, from the PCRF to the PCEF.

When Secondary PDP Context Activation occurs, the S4 SGSN performs a Request Bearer Resource Allocation procedure with the Serving GW. The Serving GW supplies the parameters required by the PCEF to properly handle the allocation of resources. These parameters are sent from the BBERF (Serving GW) to the PCRF for further processing when a PMIP-based S5/S8 is deployed.

The PCRF may provide the following parameters in the Acknowledgement of the Gateway Control and QoS Rules Request to the Serving GW (in addition to the parameters described in clause 7.7.3): Authorized APN-AMBR, Authorized Default EPS Bearer QoS.

For the purpose of event reporting to the PCEF the BBERF may generate Event Reports to the PCRF if this has been requested by the PCRF.

A.5.4.4 Gateway Control and QoS Rules Provisioning

In the case of Gateway Control and QoS Rules Provisioning (described in clause 7.7.4) the PCRF may provide the following parameters (in addition to the parameters described in clause 7.7.4) to the Serving GW: Authorized APN-AMBR, Authorized Default EPS Bearer QoS.

For the purpose of event reporting to the PCEF the PCRF may request Event Reports from the BBERF. In response to such request the BBERF shall provide the present value(s) of the event parameters.

A.5.4.5 IP-CAN Session Establishment

The PCRF may provide the following parameters in the Acknowledgement of the IP-CAN Session Establishment to the PDN GW (in addition to the parameters in clause 7.2): Authorized APN-AMBR, User Location Information, user GSG information (if received from the BBERF).

A.5.4.6 IP-CAN Session Modification

A.5.4.6.1 IP-CAN Session Modification; GW(PCEF) initiated

The PCRF may provide the following parameters in the Acknowledgement of the IP-CAN Session Modification to the PDN GW (in addition to the parameters in clause 7.4.1): Authorized APN-AMBR.

A.5.4.6.2 IP-CAN Session Modification; PCRF initiated

The PCRF may provide the following parameters in the Policy and Charging Rule Provision to the PDN GW (in addition to the parameters in clause 7.4.2): Authorized APN-AMBR, User Location Information (if received from the BBERF), user GSG information (if received from the BBERF).

A.5.4.6.3 Void

Annex B (informative): Void

Annex C (informative): Void

Annex D (informative): Access specific aspects (Non-3GPP)

D.1 DOCSIS IP-CAN

D.1.1 General

In the DOCSIS IP-CAN, each UE is connected to the network via a Cable Modem (CM) which is connected through a Hybrid Fibre Coax (HFC) access network to a Cable Modem Termination System (CMTS). Though the UE and CM may or may not be embedded within the same physical package, they remain separate logical devices. One or more UEs may subtend a single CM. Because the CMTS provides the IP connectivity and traffic scheduling and manages quality of service for the CM and the UEs which subtend it, the CMTS fulfils the role of PCEF for the DOCSIS IP-CAN. In the DOCSIS IP-CAN, the Application Manager (AM) and the Policy Server (PS) fulfil the role of the PCRF.

When accessing resources via a DOCSIS IP-CAN, the Rx interface can be used to request resources. The communication between the AM and PS and the PS and CMTS uses the PKT-MM-2 interface which is based on COPS and defined in J.179. The remainder of this clause documents the mapping of PCC terminology to the DOCSIS IP-CAN and how the DOCSIS IP-CAN realizes the defined PCC functionality. This clause also establishes the requirements of the Rx interface as it is used for the DOCSIS IP-CAN.

The PKT-MM-2 interface is shown here for information to illustrate the organization of the DOCSIS IP-CAN. References that specify the PKT-MM-2 interface do not constitute normative requirements for the 3GPP architecture. The DOCSIS IP-CAN does not intend to pose any new normative requirements for the Gx interface.

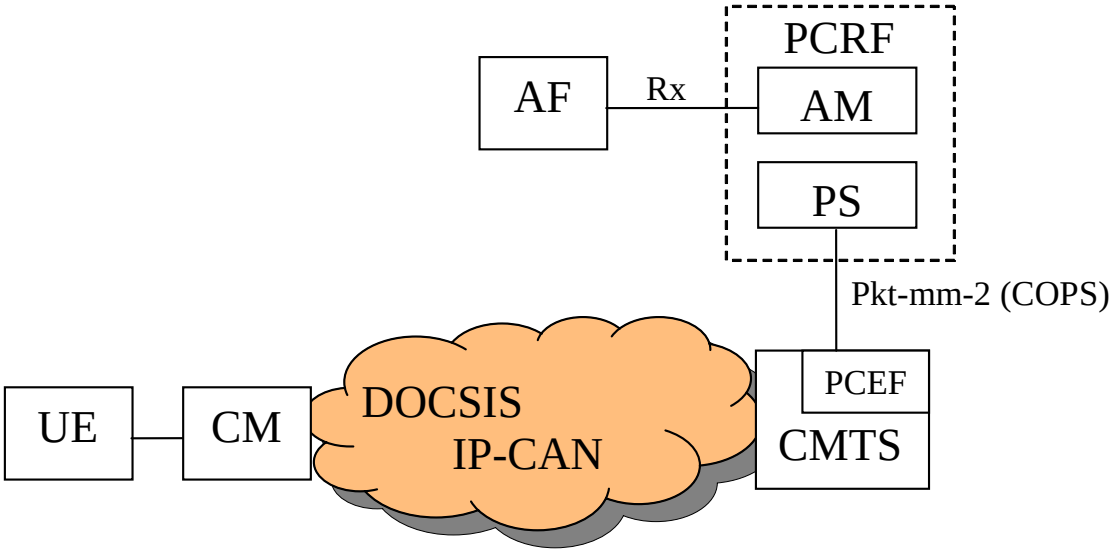

Figure D.1.1: DOCSIS IP-CAN

D.1.1 High level requirements

D.1.1.1 General

The DOCSIS IP-CAN employs for an IP-CAN session, the concept of a DOCSIS registration.

The DOCSIS IP-CAN employs for an IP-CAN bearer, the concept of a DOCSIS service flow in order to provide an information path between the UE and the CMTS. Note that DOCSIS service flows are unidirectional, either upstream (toward the CMTS) or downstream (toward the CM). When a CM is registered in the DOCSIS IP-CAN, it is assigned a unique IP Address and separate primary service flows are created for both the upstream and downstream direction

These primary service flows are typically given best effort scheduling and are used to carry all IP traffic through the CM for which a more specific service flow has not been created. When a UE is registered in the DOCSIS IP-CAN, it is assigned its own IP Address and is identified by its MAC address. A UE does not have a service flow assigned to it as a result of registration; rather it is associated with the primary service flows of the CM through which it is attached to the network. Additional bearers for the UE are created dynamically as required to provide appropriate QoS for service flows.

Bearer creation is triggered when media descriptors (Media Type and Format) for the SIP session are sent from the AF to the AM over the Rx interface. The AM translates the media descriptors into a QoS request for a DOCSIS service flow. The AM then forwards the QoS request towards the bearer enforcement point using the PKT-MM-2 interface. The PKT-MM-2 interface is not a 3GPP reference point, Specifications that detail the PKT-MM-2 interface do not impose normative requirements on the 3GPP architecture.

The following figure provides a graphical representation of the DOCSIS IP-CAN and how it maps into the generic PCC terminology.

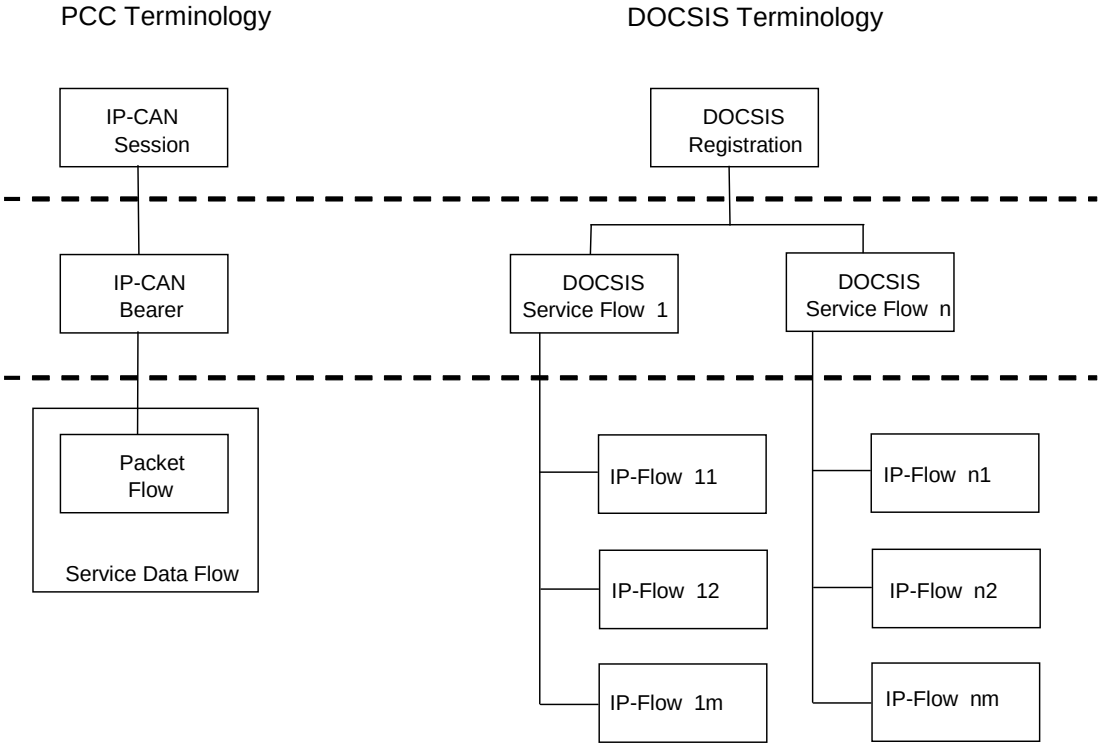

Figure D.1.2: PCC to DOCSIS terminology mapping

The DOCSIS IP-CAN defines an IP-Flow to be a unidirectional sequence of packets identified by OSI Layer 3 and Layer 4 header information. This information includes source/destination IP addresses, source/destination port numbers, protocol ID. Multiple Multimedia streams may be carried in a single IP Flow.

In a DOCSIS IP-CAN, there is no equivalent concept as a service data flow. Further a DOCSIS service flow is uni-directional and each service flow is an aggregation of the QoS needs for all the IP-Flows which make up the service flow. As such, the QoS enforcement is done at the service flow level not at the IP-Flow level.

D.1.1.2 Charging related requirements

D.1.1.3 Policy control requirements

D.1.2 Architecture model and reference points

D.1.2.1 Reference points

D.1.2.1.1 Rx reference point

D.1.2.1.2 Gx reference point

D.1.2.1.3 Void

D.1.3 Functional description

D.1.3.1 Overall description

The DOSCIS IP-CAN employs for an IP-CAN bearer, the concept of a DOCSIS service flow in order to provide an information path between the UE and the CMTS. When a Cable Modem is registered in the DOCSIS IP-CAN, primary upstream and downstream service flows are created.

When a UE is registered in the DOCSIS IP-CAN it is associated with the primary service flows of the cable modem through which it is attached to the network. Based on session information provided by the AF using the Rx reference point, the Application Manager will determine QoS requirements for each IP flow. IP flows which do not require special quality of service treatment may be carried over the primary service flows. For other IP flows which require specific QoS treatment, the Policy Server requests the CMTS to admit the flows using the pkt-mm-2 interface providing detailed information of the QoS requirements. Provided that resources are available, the CMTS will create additional bearers dynamically and push the appropriate traffic filters to the cable modem.

D.1.3.1.1 Binding mechanism

In the DOCSIS IP-CAN, the binding mechanism is achieved through the use of traffic Classifiers. These Classifiers filter traffic destined to a UE behind a Cable Modem or sourced from a UE behind a Cable Modem, to a particular DOCSIS service flow. DOCSIS Classifiers contain the following attributes which can be used to filter IP traffic:

- IP Type of Service – Range and Mask;
- IP Protocol;
- IP Source Address;
- IP Source Mask;
- IP Destination Address;
- IP Destination Mask;
- TCP/UDP Source Port Start;
- TCP/UDP Source Port End;
- TCP/UDP Destination Port Start;
- TCP/UDP Destination Port End.

The Classifier(s) which are used for a particular DOCSIS service flow are communicated to the CMTS by the Policy Server (on behalf of the Application Manager) via the pkt-mm-2 interface. The Application Manager will specify the

QoS requirements for the IP flow, the direction of the IP flow, and the Classifier(s) which are to be used for the DOCSIS service flow serving the IP flow.

When a session is no longer in use, the Application Manager communicates to the CMTS to tear down the resources associated with the session. Based on this communication, the CMTS will remove the DOCSIS service flow(s) and any Classifier(s) associated with the service flow(s), and inform the Cable Modem of the removal. Traffic which previously matched the removed Classifier(s) will now be placed on either the upstream or downstream primary DOCSIS service flow, depending on the direction of the traffic.

D.1.3.2 Functional entities

D.1.3.2.1 Policy Control and Charging Rules Function (PCRF)

In the DOCSIS IP-CAN, the Application Manager (AM) and the Policy Server (PS) fulfil the role of the PCRF.

The AM receives media descriptors (Media Type and Format) from the AF for SIP sessions and maps the QoS needs of the session to a FlowSpec, The FlowSpec is a layer 2 independent representation of the bandwidth and QoS requirements for the flow derived from the media descriptors using a well defined algorithm. The AM and PS provide network resource control in the DOCSIS IP-CAN by managing the CMTS using the PacketCable Multimedia interface pkt-mm-2.

The AM and PS map IP flows to DOCSIS service flows in accordance with the operator's policies and based on the media format information provided by the AF.

D.1.3.2.1.1 Input for PCC decisions

The AM accepts any of the following input as a basis for decisions on PCC rule operations:

- Per IP-CAN session (e.g.: UE IP address);
- Requested QoS, media format, priority indicator.

The SPR may provide the following information:

- Subscribers maximum allowed QoS resources.

Subscriber's maximum allowed bit rate for upstream and downstream.

D.1.3.2.2 Policy and Charging Enforcement Function (PCEF)

The CMTS provides PCEF equivalent functionality within the DOCSIS IP-CAN. The CMTS creates, modifies, and deletes DOCSIS service flows upon request of the Policy Server. The CMTS receives requests from the Policy Server over the pkt-mm-2 interface.

D.1.3.2.3 Application Function (AF)

D.1.3.3 Policy and charging control rule

D.1.3.3.1 General

D.1.3.3.2 Policy and charging control rule operations

D.2 WiMAX IP-CAN

In the WiMAX IP-CAN, the UE (also referenced as Mobile Station or MS in IEEE 802.16 standards) connects to the WiMAX Access Service Network (ASN). The ASN logically communicates with a Connectivity Service Network (CSN) which is a collection of core networking functions (e.g. Mobile IP HA, AAA Server, DHCP, DNS etc.). The ASN manages traffic admission and scheduling, enforces QoS for an authorized UE and performs accounting functions for the UE (per session, flow, or UE). WiMAX PCEF is part of WiMAX IP-CAN and is to be defined by WiMAX Forum [15]. WiMAX PCEF terminates the Gx reference point from the PCRF and may be a distributed enforcement architecture.

The PCC functional mapping to WiMAX IP-CAN is shown in the following figure where PCC Gx and Rx are applied.

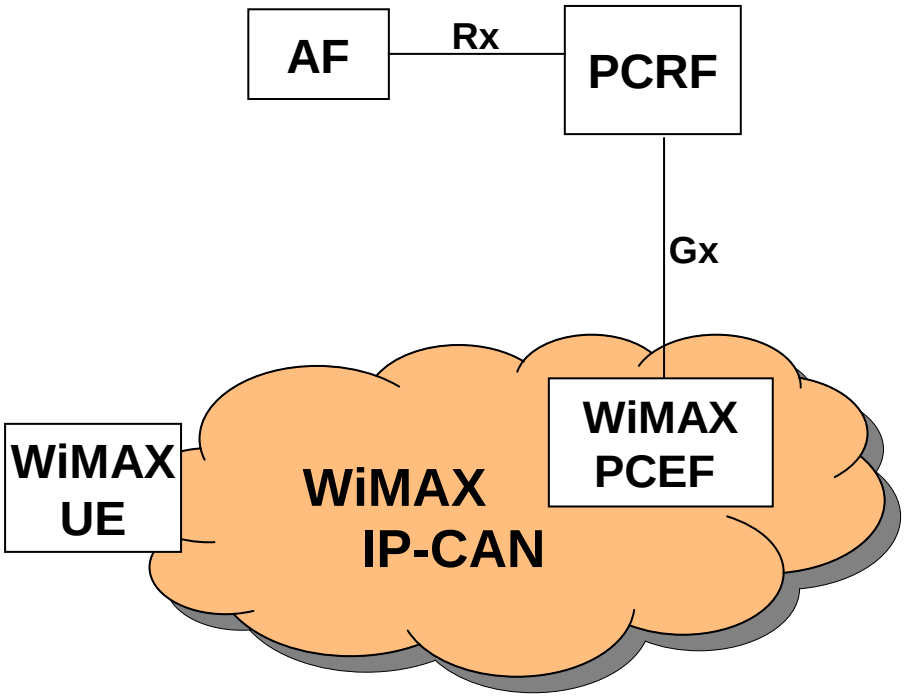

Figure D.2.1: WiMAX IP-CAN and 3GPP PCC

D.2.1 High level requirements

D.2.1.1 General

No new requirements have been identified.

D.2.1.2 Charging related requirements

No new requirements have been identified.

D.2.1.3 Policy control requirements

No new requirements have been identified.

D.2.2 Architecture model and reference points

D.2.2.1 Reference points

D.2.2.1.1 Rx reference point

WiMAX IP-CAN imposes no new requirements to the Rx reference point.

D.2.2.1.2 Gx reference point

WiMAX IP-CAN imposes no new requirements to the Gx reference point other than WiMAX specific values for existing Gx parameters (e.g. RAT type) as described in [15].

D.2.2.1.3 Sp reference point

WiMAX IP-CAN imposes no new requirements to the Sp reference point.

D.2.3 Functional description

D.2.3.1 Overall description

The WiMAX IP-CAN employs for an IP-CAN bearer, the concept of a WiMAX service flow, in order to provide a data path between the UE and the WiMAX CSN via the ASN. When a UE is registered in the WiMAX IP-CAN, it is associated with one or more WiMAX service flows. Based on session information provided by the AF via the Rx reference point, the PCRF determines the QoS requirements for each service by constructing PCC rules. The PCRF requests the WiMAX IP-CAN via Gx interface to enforce the authorized PCC rules on the WiMAX service flows. The PCEF function in the WiMAX IP-CAN enforces the PCC rules received from the PCRF. Provided that resources are available, the ASN creates and configures logical bearers and enforces creation of appropriate traffic classes associated with service flows compliant with IEEE 802.16 standards for the air interface and IP-CAN bearer capabilities in the ASN (e.g. DiffServ).

D.2.3.1.1 Binding mechanism

D.2.3.1.2 Credit management

D.2.3.1.3 Event triggers

D.2.3.2 Functional entities

D.2.3.2.1 Policy Control and Charging Rules Function (PCRF)

The 3GPP PCRF is used for the WiMAX IP-CAN. The PCRF interacts with WiMAX IP-CAN using 3GPP Gx reference point.

D.2.3.2.2 Policy and Charging Enforcement Function (PCEF)

For WiMAX IP-CAN, PCEF functions may be distributed. It additionally:

- Terminates the Gx reference point from PCRF and may act as a proxy for the PCRF.
- Handles the enforcement function relocation in WiMAX IP-CAN in a way that is transparent to the PCRF.

D.2.3.2.3 Application Function (AF)

WiMAX IP-CAN imposes no requirements to the AF functionalities.

D.2.3.3 Policy and charging control rule

D.2.3.3.1 General

D.2.3.3.1 Policy and charging control rule operations

Annex E (informative): Void

Annex F (informative): Void

Annex G (informative): PCC rule precedence configuration

The precedence information is part of the PCC rule (see clause 6.3.1) and instructs the PCEF in which order the service data flow templates of the active PCC rules needs to be analyzed when an IP packet arrives. This mechanism ensures that the service data flows can be correctly identified even if the service data flow templates contain overlapping service data flow filters.

For PCC rules that contain an application identifier (i.e. that refer to an application detection filter), the order and the details of the detection are implementation specific. Once an application has been detected, enforcement and charging shall however be applied under consideration of the PCC rule precedence, i.e. when multiple PCC rules overlap, only the enforcement and charging actions of the PCC rule with the highest precedence shall be applied.

NOTE: This ensures that traffic described by service data flow filters can be precluded from the enforcement of application detection filter based PCC rules if this is necessary (e.g. for sponsored data connectivity).

Within the PCC framework it is possible to use different types of PCC rules for which the service data flow templates may not always be known by the PCRF. Therefore, the PCC rule precedence information needs to be carefully configured to avoid certain situations e.g. a dynamic PCC rule cannot be applied for service data flow detection due to a predefined PCC rule not known to the PCRF with overlapping filter information and a higher precedence.

For example, an operator could structure the value range of the precedence information into separate value ranges (in decreasing order) for the different types of PCC rules as follows:

- dynamic PCC rules;
- predefined PCC rules known to the PCRF;
- predefined PCC rules not known to the PCRF;
- dynamic PCC rules for non-operator controlled services, i.e. those which are generated by the PCRF based on the UE provided traffic mapping information (and which take over the UE provided precedence information).

Annex H (normative): Access specific aspects (EPC-based Non-3GPP)

H.1 General

An EPC-based non-3GPP IP-CAN (TS 23.402 [18]), which requires the Gxa for dynamic QoS control, shall include the BBERF. The allocation of a BBERF to a node within the non-3GPP IP-CAN is out of 3GPP scope, unless otherwise specified in this Annex.

H.2 EPC-based cdma2000 HRPD Access

In case of EPC-based cdma2000 HRPD access the BBERF is located in the HRPD Serving Gateway (HSGW) defined in 3GPP2 X.P0057 [20].

The HSGW of an EPC-based cdma2000 HRPD access that supports a Gxa interface shall support all the Gxa procedures defined in this specification.

NOTE 1: If the HSGW does not support the Gxa interface, the HSGW performs QoS enforcement in the HRPD access based on subscription-based QoS policies provided by the 3GPP AAA Server/Proxy during access authentication and/or static QoS policies configured in the HSGW. However, this is out of the scope of this specification.

During the pre-registration phase in case of optimised EUTRAN-to-HRPD handovers, the Serving GW and the HSGW are associated with the IP-CAN session(s) of the UE in the PCRF. The HSGW is the non-primary BBERF.

NOTE 2: The HSGW performs QoS mapping between the QoS parameters exchanged across Gxa interface and the cdma2000 HRPD QoS parameters used within the HRPD access. However, this is out of the scope of this specification.

For EPC based cdma2000 HRPD access, the IP-CAN bearer establishment mode for all of the simultaneous IP-CAN sessions between a UE and a PDN shall have the same value.

NOTE 3: The UE is supposed to assign the same BCM value and the PCRF is supposed to keep the value assigned by the UE.

H.3 EPC-based Trusted WLAN Access with S2a

In an EPC-based trusted WLAN Access with S2a, the PCEF is located in the PDN-GW and the BBERF does not apply.

NOTE: Gxa interface is not used for S2a-PMIP in Trusted WLAN within this Release of the specification.

From the network scenarios listed in clause 7.1, the Case 1 (no Gateway Control Session) applies.

For an IP-CAN session set-up over a Trusted WLAN Access with S2a, at IP-CAN Session Establishment, if TWAN location information (e.g. BSSID and the SSID of the access point to which the UE is attached, as described in TS 23.402 [18]) has been received by the PCEF, the PCEF provides this information to the PCRF (over Gx). This occurs at step 3 of Figure 7.2-1 (IP-CAN Session Establishment). This information is also provided by the PCEF to the charging entities as described in TS 32.251 [9].

Annex I (informative): Void

Annex J (informative): Standardized QCI characteristics - rationale and principles

The following bullets capture design rationale and principles with respect to standardized QCI characteristics:

- A key advantage of only signalling a single scalar parameter, the QCI, as a "pointer" to standardized characteristics - as opposed to signalling separate parameters for resource type, priority, delay, and loss – is that this simplifies a node implementation.

NOTE 1: TS 23.107 [14] permits the definition of more than 1600 valid GPRS QoS profiles (without considering GBR, MBR, ARP, and Transfer Delay) and this adds unnecessary complexity.

- In general, the rate of congestion related packet drops can not be controlled precisely for Non-GBR traffic. This rate is mainly determined by the current Non-GBR traffic load, the UE's current radio channel quality, and the configuration of user plane packet processing functions (e.g. scheduling, queue management, and rate shaping). That is the reason why services using a Non-GBR QCI should be prepared to experience congestion related packet drops and/or per packet delays that may exceed a given PDB. The discarding (dropping) of packets is expected to be controlled by a queue management function, e.g. based on pre-configured dropping thresholds, and is relevant mainly for Non-GBR QCIs. The discarding (dropping) of packets of an SDF aggregate mapped to a GBR QCI should be considered to be an exception as long as the source sends at a rate smaller than or equal to the SDF aggregate's GBR.

- An operator would choose GBR QCIs for services where the preferred user experience is "service blocking over service dropping", i.e. rather block a service request than risk degraded performance of an already admitted service request. This may be relevant in scenarios where it may not be possible to meet the demand for those services with the dimensioned capacity (e.g. on "new year's eve"). Whether a service is realized based on GBR QCIs or Non-GBR QCIs is therefore an operator policy decision that to a large extent depends on expected traffic load vs. dimensioned capacity. Assuming sufficiently dimensioned capacity any service, both Real Time (RT) and Non Real Time (NRT), can be realized based only on Non-GBR QCIs.

NOTE 2: The TCP's congestion control algorithm becomes increasingly sensitive to non congestion related packet losses (that occur in addition to congestion related packet drops) as the end-to-end bit rate increases. To fully utilise "EUTRA bit rates" TCP bulk data transfers will require a PLR of less than 10^{-6}.

Annex K (informative): Limited PCC Deployment

Limited support for policy provisioning occurs in certain deployment scenarios.

If PCC is deployed in the HPLMN but not the VPLMN, dynamic policy provisioning only occurs in the home routed roaming cases if no BBERF is employed, or in the non-roaming scenarios.

In roaming scenarios in which the PCC is deployed in the HPLMN but not the VPLMN, and a GW(BBERF) is used:

- limited policy control is possible when the UE moves from the HPLMN to the VPLMN. In the VPLMN, the UE receives only service according to static policies or according to static subscriber policies, defined outside the PCC framework delivered as described in TS 23.402 [18]; the dynamically allocated resources associated with specific EPS Bearers no longer apply after this transition.

- If a UE moves from the VPLMN to the HPLMN, dedicated resource establishment procedures are used to dynamically allocate the appropriate resources in the HPLMN for EPS bearers.

- PCC may still be employed to provision rules to the PCEF for the purpose of charging on the basis of the IP-CAN session.

When PCC is supported in the VPLMN and not in the HPLMN, dynamic policy may only be provided for the LBO case. As the VPCRF has no access to subscriber policy information from the HPLMN, only static policy will apply. The VPCRF may however interact with the AF in the VPLMN in order to determine dynamic policy for SDFs operating entirely in the VPLMN. This policy will be enforced either in the PCEF or the BBERF in the VPLMN. Bearer binding will occur under control of the VPLMN, either in the GW(BBERF) or in the GW(PCEF) (in the case of GTP-based S5/S8 for 3GPP access).

Annex L (normative): Limited PCC Deployment

In roaming scenarios in which the PCC is deployed in the HPLMN but not the VPLMN, and a GW(BBERF) is used:

- HPCRF and OCS shall detect based on local configuration according to roaming agreements that the event reporting is restricted. The OCS shall not set re/authorization triggers which would require event reporting that can not be generated.

- The H-PCRF shall inform the AF of event triggers that cannot be reported. The H-PCRF shall inform the AF of events that cannot be reported when AF registers event trigger to the H-PCRF. When the H-PCRF detects limited PCC deployment, some event triggers which are dependent upon reporting from the BBERF cannot be reported. The H-PCRF shall inform the AF of events that cannot be reported when the UE is in or after the UE has handed over to an Access Gateway where the BBERF functionality is not deployed.

Annex M (informative): Handling of UE or network responsibility for the resource management of services

For access networks supporting network initiated resource signalling, the network can take over the responsibility for the resource management for a service. This means the network triggers the request for resources when the service is started or modified and triggers the release of the resources when the service is terminated. The UE remains responsible for starting the service or reacting to an incoming service signalling and needs to decide about how to proceed with the service if the desired resources are not available.

As the network initiated resource signalling cannot always be used due to UE, access network, roaming or other restrictions, the default responsibility for the resource management for a service is given to the UE. However, the UE and the PCRF may be configured on a per service basis to make use of the network responsibility for resource management if the current access network allows this, i.e. if network initiated resource signalling is possible. The UE configuration regarding the responsibility for the resource management of a service might be updated by device management.

Regarding the PCC functionality, the main difference between the UE and the network responsibility for resource management is in the PCRF behaviour. When the UE is responsible, the PCRF waits with the authorization and installation of PCC rules until an appropriate resource request arrives. The main criteria for authorizing a PCC rule is a match of the service data flow filter information with the UE provided traffic mapping information, i.e. the UE desire to run this service on the requested resource. The QoS requested by the UE is then aligned with the authorized QoS for the PCC rules that are associated with the resource request by the PCRF.

When the network is responsible for the resource management, the PCRF authorizes PCC rules immediately, i.e. when the IP-CAN session is established and when new service information is received from the AF. The authorized PCC rules are installed afterwards.

Annex N (informative): PCC usage for sponsored data connectivity

N.1 General

With sponsored data connectivity, the Sponsor has a business relationship with the operator and the Sponsor reimburses the operator for the user's data connectivity in order to allow the user access to an associated Application Service Provider's (ASP) services. Alternatively, the user pays for the connectivity with a transaction which is separate from the subscriber's charging. It is assumed the user already has a subscription with the operator.

A possible deployment configuration for sponsored data connectivity in the non roaming case is illustrated in Figure N.1-1. In the roaming case a S9 reference point is present between the H-PCRF and the V-PCRF.

NOTE 1: Sponsored data connectivity is not supported in the roaming with visited access scenario in this Release.

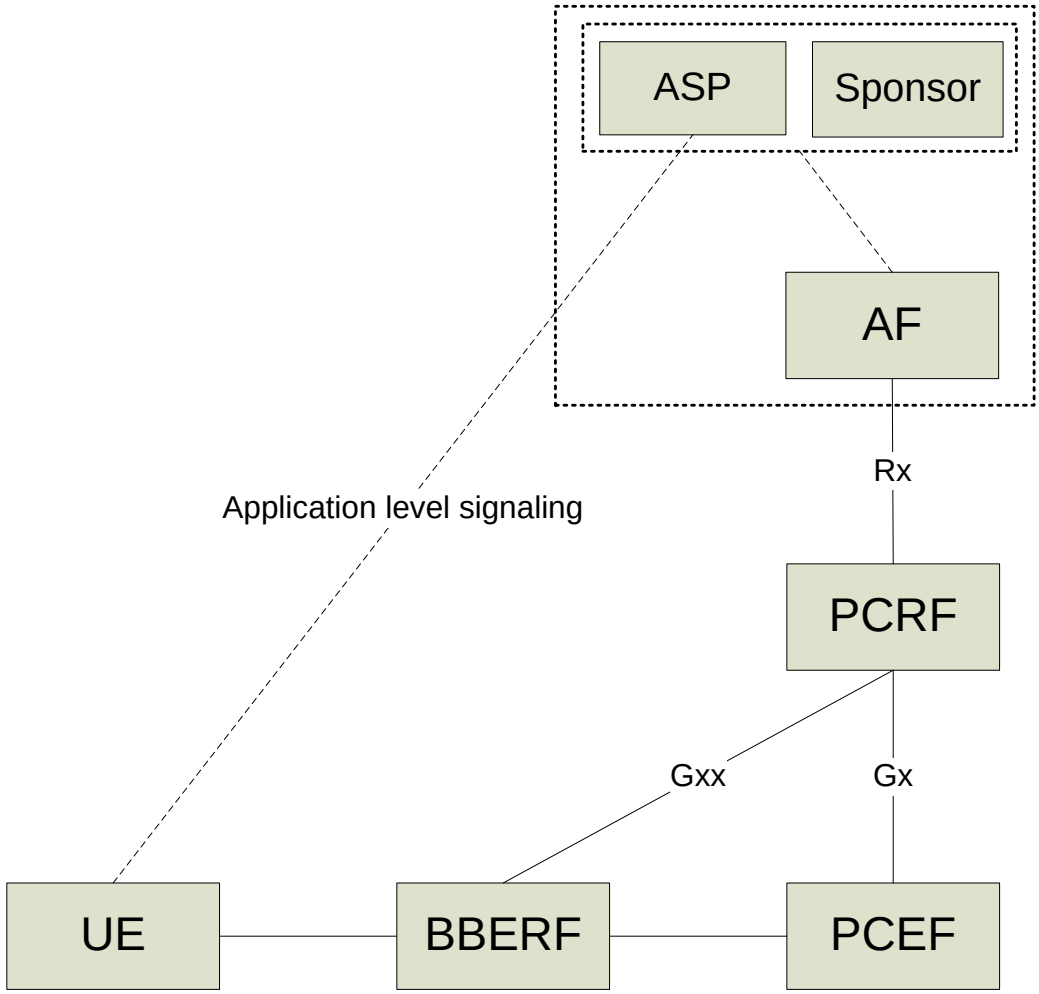

Figure N.1-1: Deployment for sponsored data connectivity

The relationship between the AF and Sponsor and between the Sponsor and ASP is out of scope of this specification. A single AF can serve multiple ASPs and multiple sponsors.

NOTE 2: An ASP can also be a sponsor.

The sponsor may choose to supply the PCRF (via the AF) with the usage thresholds that it expects the PCEF to enforce. Alternatively, the Sponsor can allow the ASP to enforce such control over the sponsored data connectivity.

N.2 Reporting for sponsored data connectivity

There are two deployment scenarios for usage reporting for sponsored data connectivity. The Sponsor Identifier and Application Service Provider Identifier are provided for sponsored services to the PCRF from the AF over the Rx interface.

In the first scenario the PCRF assigns a service specific Charging Key for a sponsored IP flow. The Charging key is used by the PCEF to generate separate accounting records for offline charging and and/or usage data records for online charging for the sponsored flows. Correlation of accounting records and usage data records from multiple users per sponsor and/or application service provider is then performed using the charging key.

In a second scenario the Sponsor Identifier and Application Service Provider Identity is included in PCC-rules from the PCRF to the PCEF as defined in clause 6.3.1. For this scenario the same Charging Key may be used both for IP flows that are sponsored and for flows that are not sponsored. Accounting records generated by the PCEF for offline charging include the Sponsor Identity and the Application Service Provider Identity. Correlation of accounting records from multiple users per sponsor and/or application service provider can then be based on Sponsor Identity and Application Service Provider Identity instead of the Charging Key. Usage reporting for online charging including Sponsor Identity and Application Service Provider Identity has not been specified in this release of the specification. PCC-rules that include a Sponsor Identity and an Application Service Provider Identity should include a Charging Method that indicates offline charging.

Annex P (normative): Fixed Broadband Access Interworking with EPC

This annex specifies the enhancement to PCC framework for supporting dynamic QoS interworking with Policy Framework defined by Broadband Forum.

P.1 Definitions

UE local IP address is defined as: either the public IPv4 address and/or IPv6 address/IPv6 network prefix assigned to the UE by the BBF domain in the no-NAT case, or the public IPv4 address assigned by the BBF domain to the NATed RG that is used for this UE.

H(e)NB local IP address is defined as: either the public IPv4 address and/or IPv6 address/IPv6 network prefix assigned to the H(e)NB by the BBF domain in the no-NAT case, or the public IPv4 address assigned by the BBF domain to the NATed RG that is used for this H(e)NB.

Non-seamless WLAN offload (NSWO) is a capability of routing specific IP flows over the WLAN access without traversing the EPC as defined in clause 4.1.5 of TS 23.402 [18].

EPC-routed: User plane traffic that is routed via a PDN GW in EPC as part of a PDN Connection. EPC-routed applies to non-roaming, roaming with traffic home-routed and roaming with traffic local break-out cases.

P.2 Abbreviations

The following abbreviations are relevant for this annex only:

BBF	Broadband Forum
BPCF	Broadband Policy Control Function
NSWO	Non-Seamless WLAN offload
NSWO-APN	Non-Seamless WLAN offload APN

P.3 High Level Requirements

The same requirements as defined in clause 4 applies with the exception that: no UE initiated resource reservation procedures are supported for EPC-based Fixed Broadband Access.

In addition, it shall be possible to.

- perform resource reservation (e.g. admission control request to the Fixed Broadband Network) based on the bandwidth requirements and the QoS attributes of a service request for EPC-routed traffic in the Fixed Broadband network;
- provide information to identify a 3GPP UE in the Fixed Broadband Network.
- perform resource reservation (e.g. admission control request to the Fixed Broadband Network) based on the bandwidth requirements and the QoS attributes of a service request for non-seamless WLAN offloaded traffic in the Fixed Broadband network. In this case the non-seamless WLAN offloaded traffic shall be managed by PCRF as an IP-CAN session identified by one IPv4 and/or an IPv6 prefix together with UE identity information and Non-seamless WLAN offload APN. The IP-CAN session for NSWO exists as long as UE Local IP addresses/prefix is announced to the IP network and authorized by EPC. The NSWO-APN is an APN allowing the BPCF to indicate to PCRF that for subscribers of a certain HPLMN the IP-CAN session is related to NSWO traffic.

NOTE 1: The NSWO-APN is not used for the selection of a PDN GW.

NOTE 2: Dynamic provisioning from the HPLMN of NSWO-APN to BPCF is out of the scope of this Release.

NOTE 3: The naming convention of NSWO-APN is left to operator's implementation decision.

P.4 Architecture model and reference points

P.4.1 Reference points

P.4.1.1 S9a Reference point

The S9a reference point resides between:

- the PCRF in the PLMN and the BPCF in the Fixed Broadband Access Network (BPCF);
- the PCRF in the VPLMN (V PCRF) and the BPCF in the Fixed Broadband Access Network (BPCF).

The S9a reference point enables transfer of dynamic QoS control policies from the (V-)PCRF to the BPCF for the purpose of allocation of QoS resources in the Fixed Broadband Access Network for non-seamless WLAN offloaded traffic and for EPC-routed traffic.

For scenarios where the traffic is non-seamless WLAN offloaded in the Fixed Broadband Access Network, based on Rx authorizations and event subscriptions, or equivalent information, received by the BPCF from an AF in the Fixed Broadband Access Network, the S9a reference point enables the BPCF to send Rx authorizations and event subscriptions to the PCRF.

NOTE: The AF in the Fixed Broadband Access Network and the reference point between the AF in the Fixed Broadband Access Network and the BPCF are out of scope for this specification.

P.4.1.2 S15 Reference Point

The S15 reference point between the HNB GW and the PCRF and between the HNB GW and the V-PCRF. It enables the transfer of dynamic QoS control policies from the (V-)PCRF to the BPCF for the purpose of allocation of QoS resources in the Fixed Broadband Access Network for HNB CS calls.

P.4.1.3 Gxx reference point

When this reference point corresponds to the Gxb*, it transports access information for WLAN UEs such as the UE local IP address and the UDP port number. It is used scenarios in which the ePDG provides the access information via Gxb* to trigger the PCRF to initiate the S9a session i.e. S2b-PMIP and untrusted S2c.

For the case of H(e)NB with S5/S8 PMIP, this reference point corresponds to Gxc and the requirements in clause 5.2.7 applies. In addition for the purpose of fixed broadband access interworking, Gxc transports the H(e)NB Local IP address and the UDP source port, if available, in the fixed broadband access network where the H(e)NB connects to.

P.4.1.4 S9 reference point

In addition to the specification of the S9 reference point defined in clause 5.2.6, this reference point is used to trigger the V-PCRF to initiate the Gateway Control Session establishment over S9a. The S9 interface is enhanced to carry from the H-PCRF to the V-PCRF the UE local IP address, the UDP port number, if available, the H(e)NB local IP address and UDP port, if available, and the ePDG IP address (for S2b and untrusted S2c access) or the PDN GW IP address (for trusted S2c access), if available.

P.4.1.5 Gx reference point

In addition to the specification of the Gx reference point defined in clause 5.2.2, this reference point is enhanced as described in the following. The IP-CAN establishment/modification request message, send from PCEF to PCRF, should include:

- the UE local IP address and the UDP port number, if available, when WLAN access and GTP is used.
- the UE local IP address and the UDP port number, if available, when trusted S2c is used.
- the H(e)NB local IP address and the UDP port number, if available, when UE accesses from H(e)NB and GTP S5/S8 is used.

P.4.2 Reference architecture

P.4.2.0 General

The reference architecture described in clause 5.1 is:

- extended to include S9a reference point to support fixed broadband access interworking to EPC for the following scenarios:
  - S9a reference point between PCRF and BPCF in the non-roaming case for traffic that is routed via EPC and for traffic that is non-seamless WLAN offloaded in the fixed broadband access network; and
  - S9a reference point between the V-PCRF and BPCF for roaming cases with visited access and home routed for traffic that is routed via EPC; and for traffic that is non-seamless WLAN offloaded in the fixed broadband access network;
- extended to include the S15 reference point as defined in clause P.4.1.2;
- PCEF resides in the PDN GW;
- for WLAN access: BBERF resides in the ePDG. The BBERF only applies for cases 2b (i.e. S2b-PMIP, S2c-untrusted);
- for H(e)NB access with S5/S8 PMIP: BBERF resides in the Serving GW.

The UE may or may not be behind a NAT. The NAT may reside in the BBF access network or in the customer premises network. Policy interworking via S9a for non-seamless WLAN offloaded traffic in this release is supported for scenarios without NAT in the BBF domain.

P.4.2.1 Reference architecture – Non-Roaming

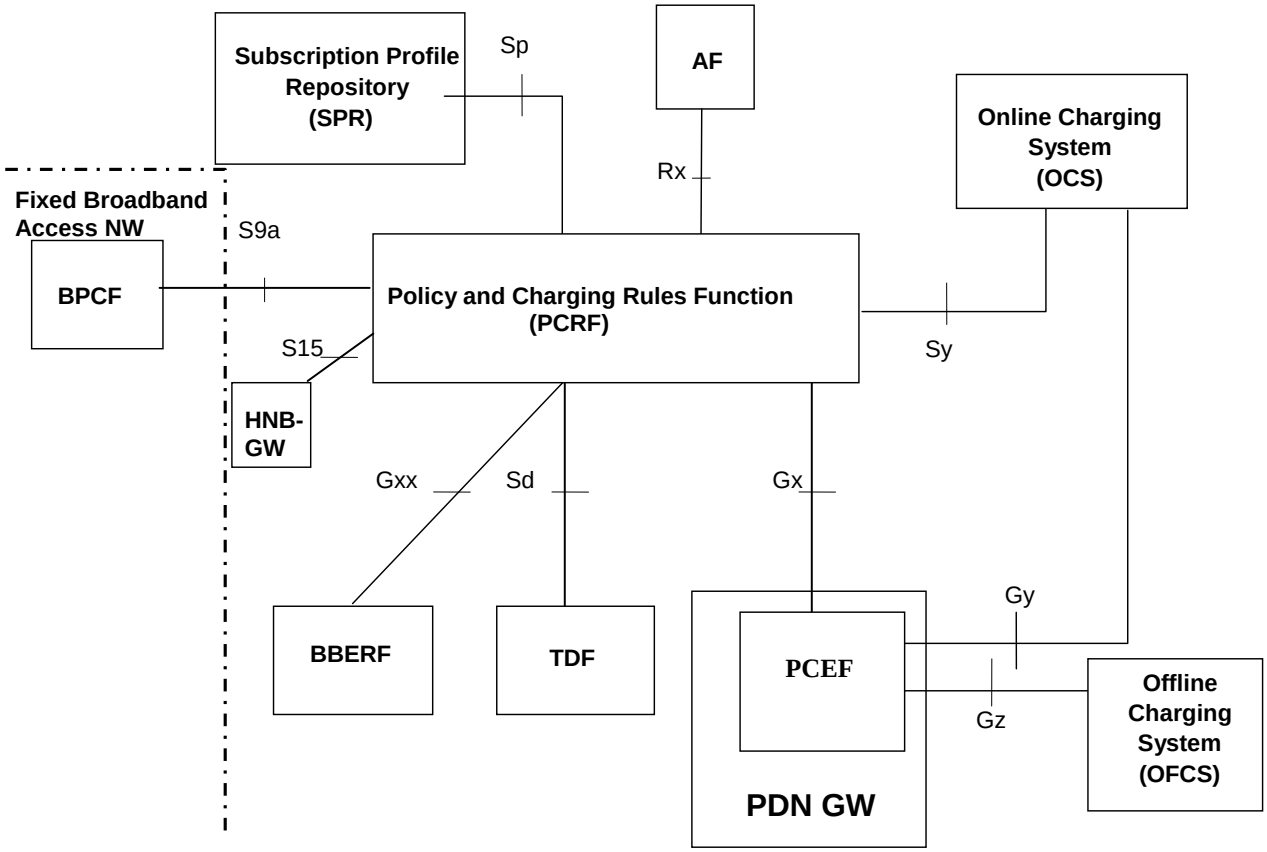

Figure P.4.2.1-1: PCC Reference architecture for Fixed Broadband Access Interworking

P.4.2.2 Reference architecture – Home Routed

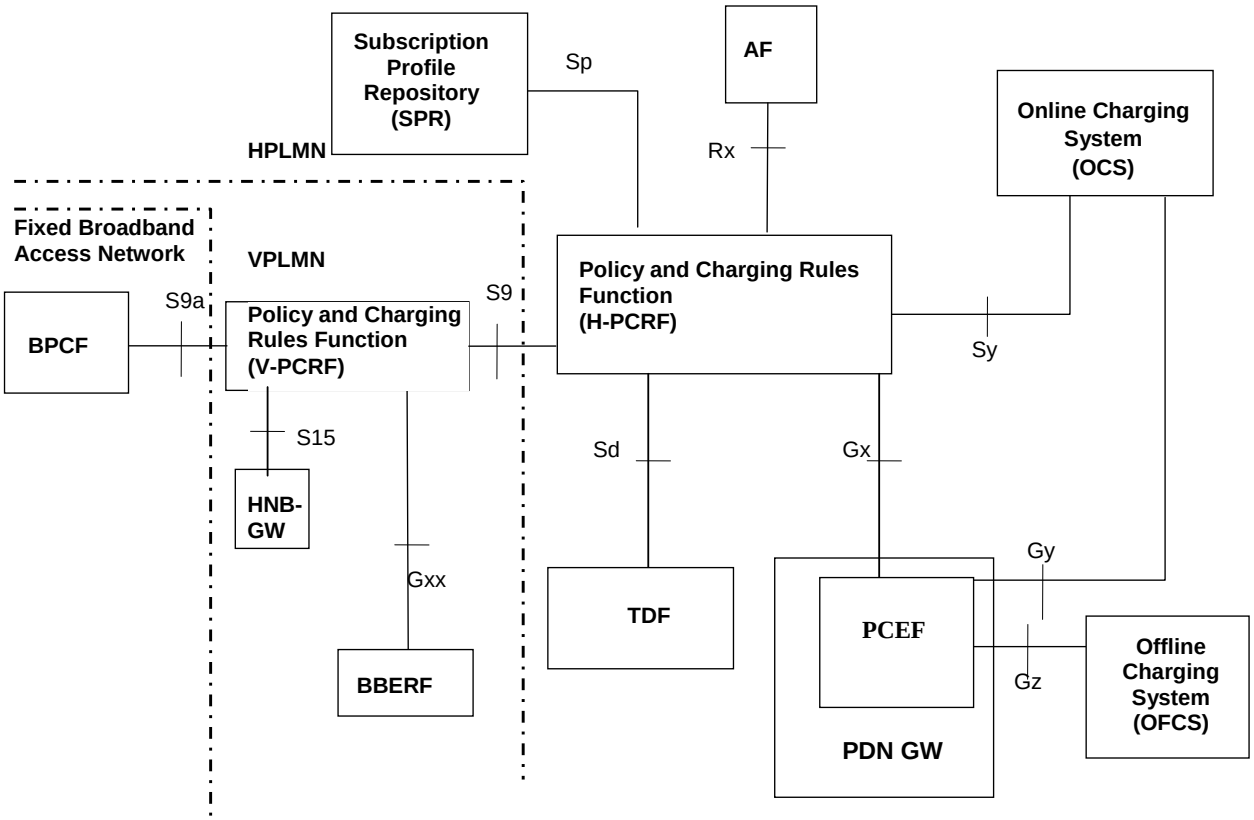

Figure P.4.2.2-1: PCC Reference architecture for Fixed Broadband Access Interworking (home routed)

P.4.2.3 Reference architecture – Visited Access

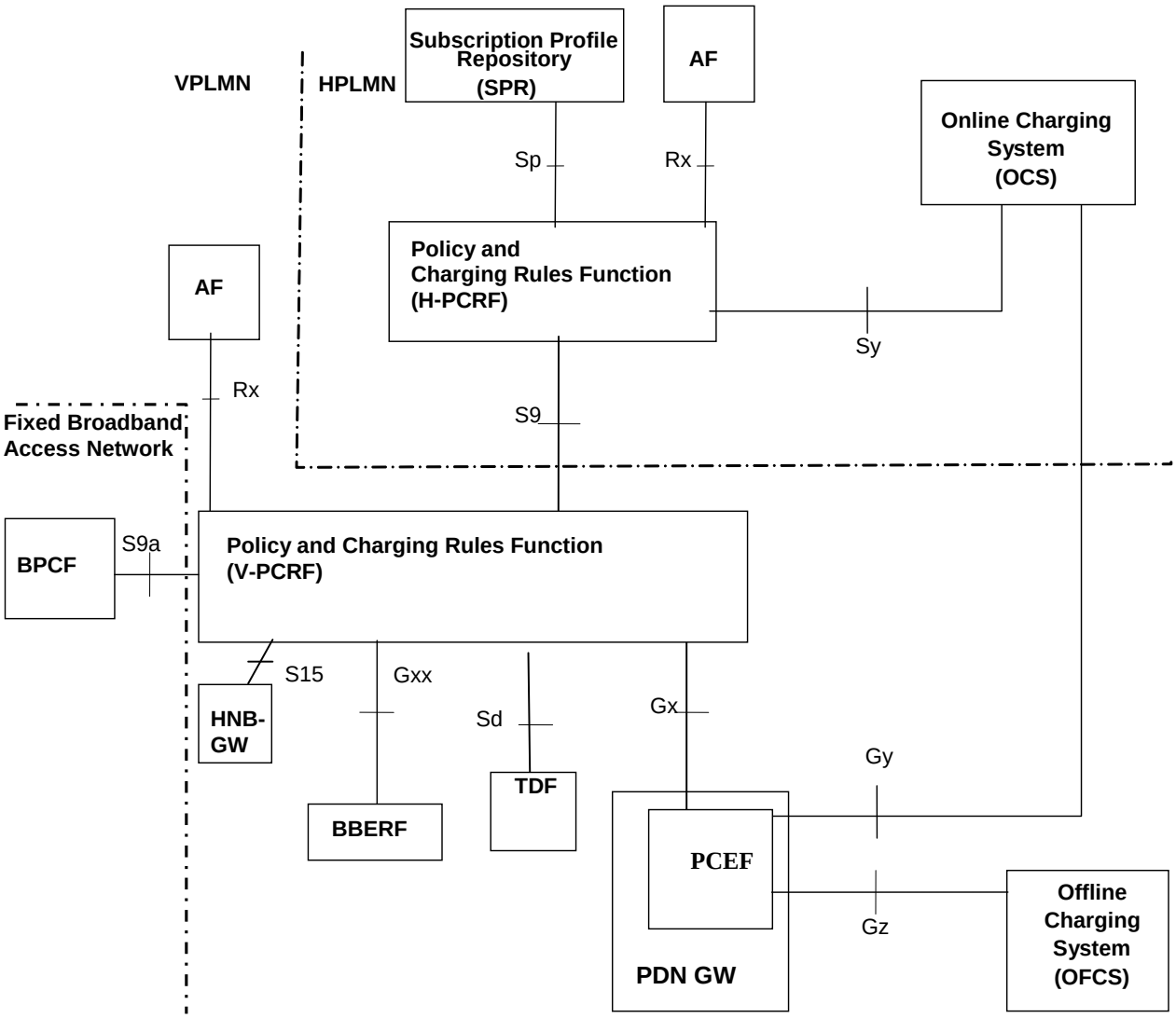

Figure P.4.2.3-1: PCC Reference architecture for Fixed Broadband Access Interworking (visited access)

P.4.2.4 Reference architecture - Non-Roaming with non-seamless WLAN offload in Fixed Broadband Access Network; scenario with AF

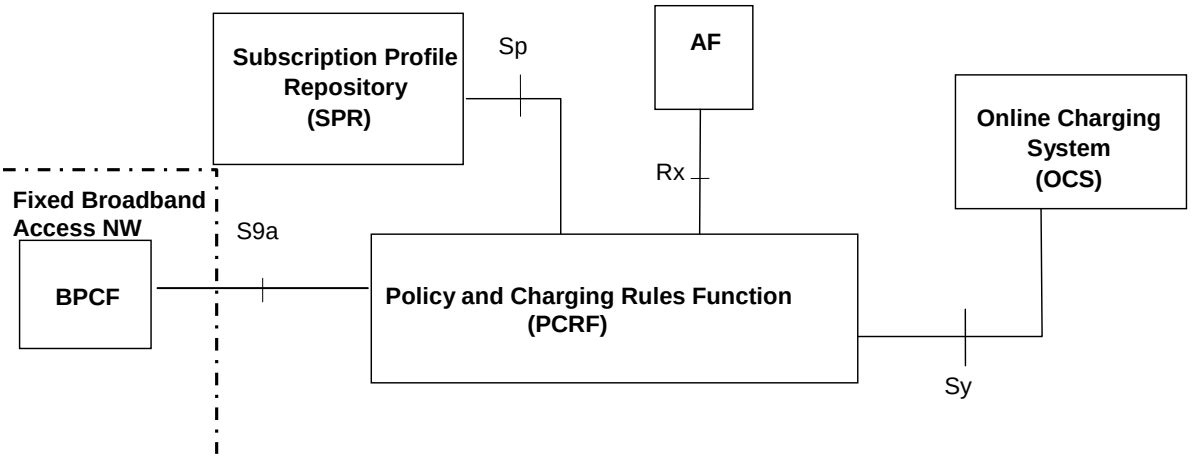

Figure P.4.2.4-1: PCC Reference architecture for Fixed Broadband Access Interworking (non-roaming with non-seamless WLAN offload in Fixed Broadband Access Network)

NOTE 1: The architecture also supports scenarios where there is an Application Function in the Fixed Broadband Access Network. The AF in the Fixed Broadband Access Network and the reference point between the AF in the Fixed Broadband Access Network and the BPCF are out of scope for this specification.

NOTE 2: The AF in this architecture is used with traffic that is non-seamless WLAN offloaded in the Fixed Broadband Access Network.

P.4.2.5 Reference architecture - Roaming with non-seamless WLAN offload in Fixed Broadband Access Network: scenario with AF

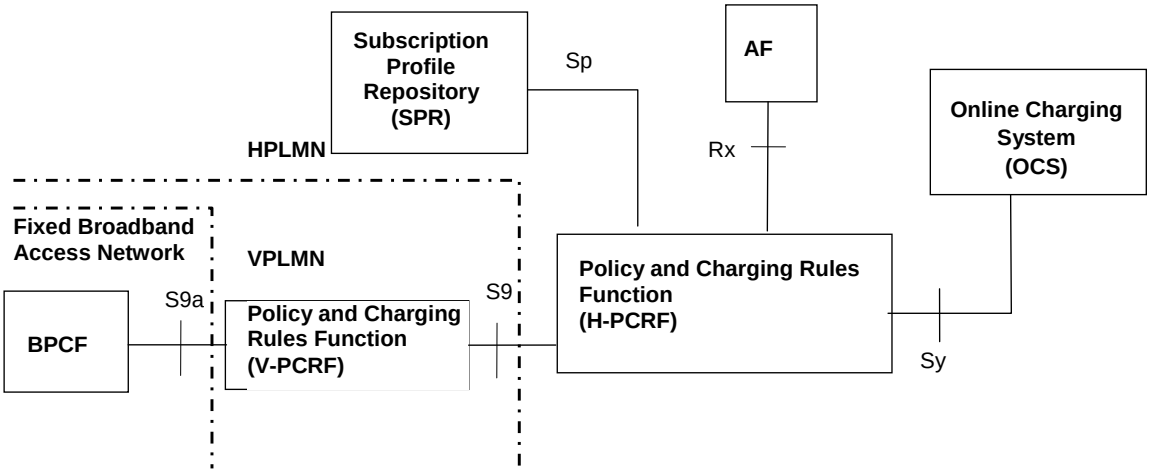

Figure P.4.2.5-1: PCC Reference architecture for Fixed Broadband Access Interworking (roaming with non-seamless WLAN offload in Fixed Broadband Access Network)

NOTE 1: The architecture also supports scenarios where there is an Application Function in the Fixed Broadband Access Network. The AF in the Fixed Broadband Access Network and the reference point between the AF in the Fixed Broadband Access Network and the BPCF are out of scope for this specification.

NOTE 2: The AF in this architecture is used with traffic that is non-seamless WLAN offloaded in the Fixed Broadband Access Network.

P.4.2.6 Reference architecture - Non-Roaming with non-seamless WLAN offload in Fixed Broadband Access Network: scenario with TDF

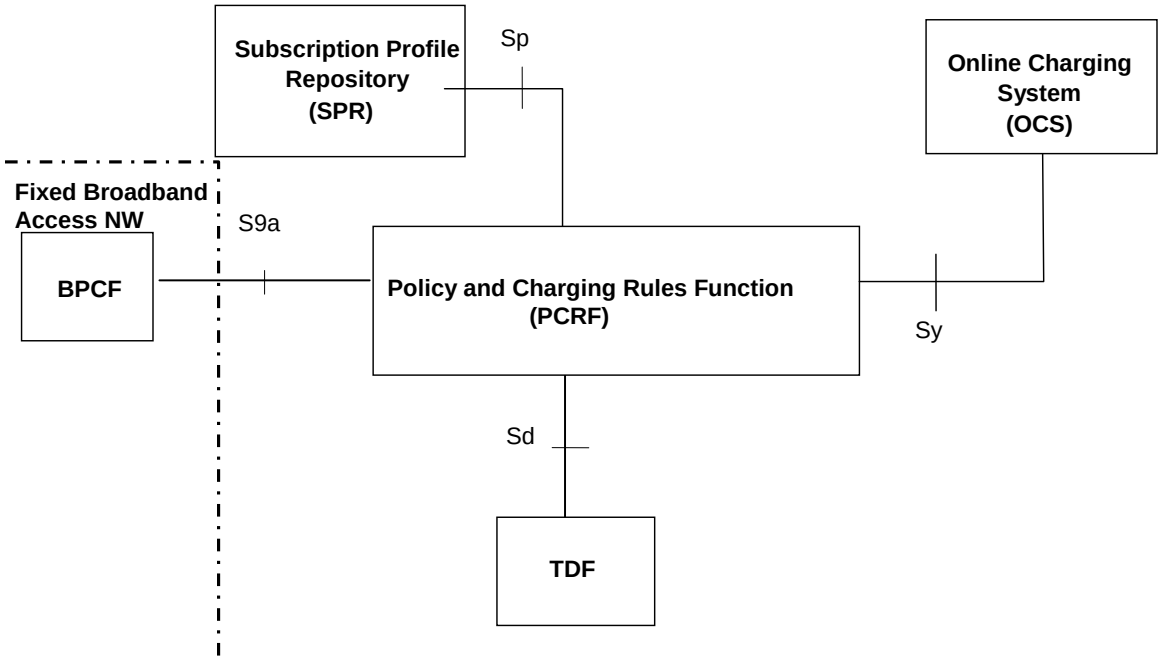

Figure P.4.2.6-1: PCC Reference architecture for Fixed Broadband Access Interworking (non-roaming with non-seamless WLAN offload in Fixed Broadband Access Network)

NOTE 1: The TDF in this architecture is used with traffic that is non-seamless WLAN offloaded in the Fixed Broadband Access Network.

NOTE 2: Sd is an intra-operator interface. Scenarios where non-seamless WLAN offloaded traffic is routed via the TDF are therefore limited to the case where the Fixed Broadband Access Network and the PLMN are owned by the same operator.

P.4.2.7 Reference architecture - Roaming with non-seamless WLAN offload in Fixed Broadband Access Network: scenario with TDF

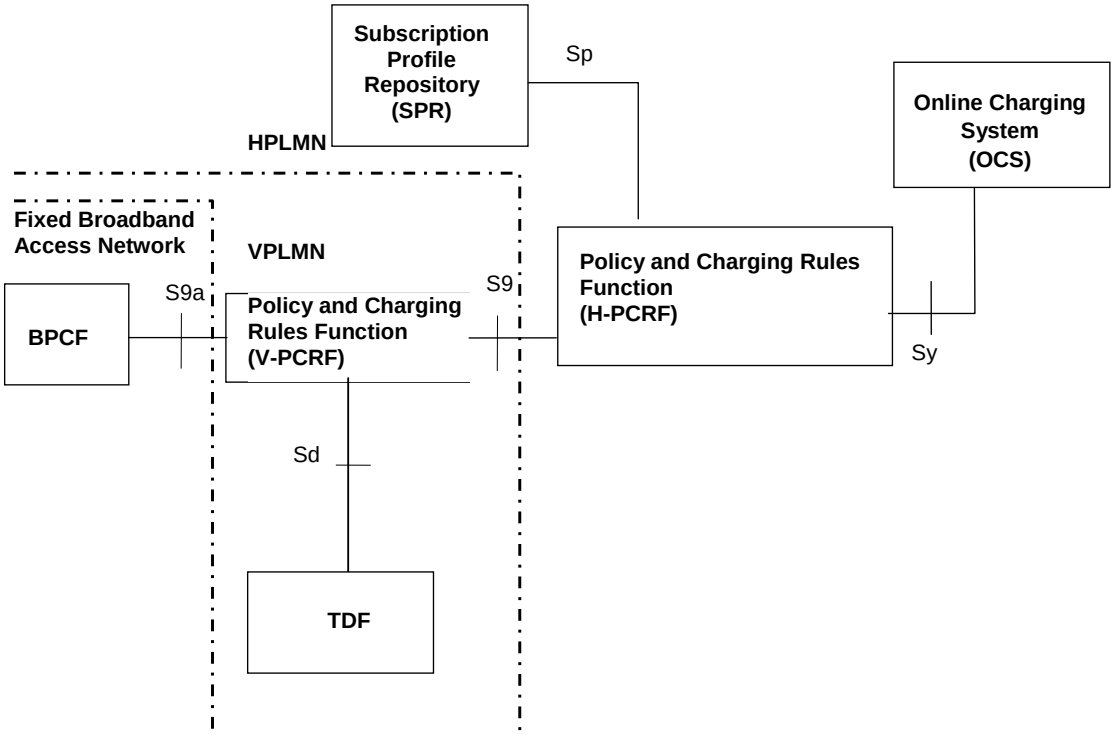

Figure P.4.2.7-1: PCC Reference architecture for Fixed Broadband Access Interworking (roaming with non-seamless WLAN offload in Fixed Broadband Access Network)

NOTE 1: The TDF in this architecture is used with traffic that is non-seamless WLAN offloaded in the Fixed Broadband Access Network.

NOTE 2: Sd is an intra-operator interface. Scenarios where non-seamless WLAN offloaded traffic is routed via the TDF are therefore limited to the case where the Fixed Broadband Access Network and the VPLMN are owned by the same operator.

P.5 Functional description

P.5.1 Overall description

For EPC based Fixed Broadband Access Interworking with EPC-routed traffic the credit management, reporting, usage monitoring, termination actions, service data flow prioritization and standardized QoS characteristics as defined in clause 6.1 shall apply.

For non-seamless WLAN offloaded traffic service data flow prioritization as defined in clause 6.1 applies. For scenario with TDF, usage monitoring as defined in clause 6.1 applies. For NSWO traffic in other scenarios, without TDF, usage monitoring is out of scope of this specification. For all scenarios, credit management, termination actions and reporting for NSWO traffic are out of scope of this specification.

The purpose of policy interworking via S9a for non-seamless WLAN offloaded traffic (PCC Rules provisioned for the UE local IP address) is to enable policy control in the BBF domain in two different ways:

- Gate enforcement. The BPCF is expected to provide information over R interface to control whether a service data flow, which is subject to policy control, pass through the BNG if and only if the corresponding gate is open.

- QoS enforcement: The BPCF is expected to provide information over R interface to control the authorized QoS of a service data flow according to the QoS information received over S9a interface.

The complete specification of the BPCF is defined in BBF WT-134 [31] and BBF WT-203 [30] and BBF WT-291 [33] and it is out of the scope of 3GPP.

The information contained in a PCC Rule generated by the PCRF for NSWO traffic includes Service Data Flow Detection and Policy Control information elements specified in table 6.3. The PCC rules for NSWO traffic do not include the Charging and Usage Monitoring Control elements specified in table 6.3.

For Fixed Broadband Access the event triggers in table P.5.1-1 shall apply in addition to the ones in table 6.2.

Table P.5.1-1: Fixed Broadband specific event triggers

Event trigger	Description	Reported from	Conditions for reporting
UE local IP address change	Either the UE local IP address or the UDP port number or both assigned by Fixed Broadband Access have changed	PCEF, BBERF	Always set
H(e)NB local IP address change	Either the H(e)NB IP address or the UDP port number or both assigned by Fixed Broadband Access have changed	PCEF, BBERF	PCRF

P.5.1.1 Binding Mechanism

P.5.1.1.1 EPC-routed traffic

For EPC routed traffic, binding mechanisms apply as defined in clause 6.1.1 by PCRF, PCEF and BBERF. In addition, the PCC and QoS Rule generation is performed by PCRF as specified in clause 6.1.1, in addition when:

- Both a Gx and associated Gateway Control Session exist for the same IP-CAN session; the PCRF shall generate QoS Rules for all the authorized PCC rules in this step.

P.5.1.1.2 Non-seamless WLAN offloaded traffic

The binding mechanism includes two steps for the non-seamless WLAN offloaded traffic:

1. Session binding.
2. PCC rule authorization.

For NSWO traffic, session binding of AF session and TDF session (in unsolicited mode) to an IP-CAN session is performed by the PCRF, as defined in clause 6.1.1, for the purpose of policy control in the BBF domain.

The PCRF derives and authorises PCC rules as described in clause 6.1.1.

P.5.1.2 S9a, Gx and S15 Session Linking

For WLAN, PCRF and BPCF both need to support session linking function. Depending on the deployment there may be one or multiple PCRF that have a Gateway Control Session on S9a for a given UE. The PCRF shall be able to perform the linking between IP-CAN sessions on Gx and the Gateway Control Session on S9a for the same UE based on IMSI and UE local IP address.

For H(e)NB scenarios a Gateway Control Session on S9a may be linked to:

- IP-CAN Sessions on Gx for all UEs connected to the H(e)NB;
- Gateway Control Sessions on S9 and/or IP-CAN Sessions on S9 (in roaming cases);
- S15 Session;

NOTE 1: There is a single S15 session per HNB for CS calls for all UEs connected to the HNB in order to improve performance. In addition, for CS calls there are no UE specific policies and therefore a single PCRF can handle CS calls for all UEs.

When the Gateway Control Session on S9a is initiated by PCRF, BPCF is expected to associate the session on R with the Gateway Control Session on S9a.

NOTE 2: How the BPCF performs the association of a Gateway Control Session on S9a and R session is out of the scope of 3GPP.

P.6 Functional Entities

P.6.1 Policy Control and Charging Rules Function (PCRF)

P.6.1.1 General

The PCRF functionality defined in clause 6.2.1.0 shall apply. In addition, to support interworking with Fixed Broadband networks, the PCRF shall:

- Send the QoS rules to the BPCF over S9a to request admission control in the fixed access.
- Send to the BPCF the UE local IP address and UDP port number for the WLAN scenario to allow the Fixed Broadband Access to identify UE traffic.
- Send to the BPCF the HeNB Local IP address and UDP port number for the Femto scenario. This allows the Fixed Broadband Access to identify IP flows corresponding to the IPSec tunnel from the HeNB GW to the SeGW which transports H(e)NB UE traffic.
- Be able to be configured with the relation of IP address ranges to Fixed Broadband Access, to allow BPCF discovery.
- Be able to receive from PDN GW the H(e)NB Local IP address and the UDP source port, if available, in the Fixed Broadband access network at which the H(e)NB is connected.
- Be able to receive the UE local IP address and UDP source port from the ePDG (case 2a and case 2b) and PDN GW (case 1).
- Be able to receive the HNB local IP address and UDP source port from HNB GW (case 1) for the HNB CS scenario.

When PCRF receives the IP-CAN session establishment indication for a PDN connection initiated for a UE connected via Fixed network access, the PCRF determines if a Gateway control session is already present for this IP-CAN session. If Gateway control session is not already established, the PCRF shall trigger Gateway control session establishment procedure from the BPCF.

When the UE is connecting via Fixed Broadband access network, no QoS Rules should be sent to the ePDG. The PCRF identifies when the UE is connecting via Fixed Broadband access network from the IP-CAN type.

For the purpose of the policy control in the Fixed Broadband Access network for the non-seamless WLAN offloaded traffic, the PCRF shall:

- Handle incoming request of IP-CAN session establishment received over S9a.
- Perform session binding of the AF session information received via Rx or via S9a with an existing IP-CAN session using the UE local IP address and the IMSI (if available).
- Initiate IP-CAN Session Modification and also QoS information provision for Non-seamless WLAN offloaded traffic.
- Establish an Sd session with the TDF when an indication of IP-CAN session establishment is received over S9a for the UE local IP address in case of architecture variant C the solicited mode.

P.6.1.2 V-PCRF

The V-PCRF functionality defined in clause 6.2.1.3 shall apply. For the purpose of Fixed Access interworking the V-PCRF functionalities for EPC routed traffic, the following are applicable:

- If a BPCF-Initiated Gateway Control Session termination is received over S9a, then the V-PCRF shall terminate a Gateway Control session over S9 with the H-PCRF.
- For home routed roaming case, in case 1:
  - If a Gateway Control Session termination indication is received over S9 from the H-PCRF, then the V-PCRF shall trigger a Gateway Control Session termination to the BPCF.
  - If a Gateway Control and QoS Rules Request is received over S9 from the H-PCRF, then the V-PCRF shall trigger a Gateway Control and QoS Rules Request to the BPCF.
- For both home routed and visited access roaming cases, in case 2b:
  - If a Gateway Control Session establishment from the BBERF (ePDG) occurs, then the V-PCRF shall establish a Gateway Control Session with the BPCF over S9a and with the H-PCRF over S9.
  - If the last Gateway Control Session from the BBERF (ePDG) is terminated, then the V-PCRF shall terminate the Gateway Control Session with the BPCF over S9a and with the H-PCRF over S9.
- When the last PDN connection over the HNB has been terminated the V-PCRF initiates the GW Control Session Termination to the BPCF if there is no S15 session bound to the Gateway control session over S9a interface session. Otherwise, if there is a S15 session bound to the Gateway control session over S9a interface session the V-PCRF initiates the GW Control QoS rule Provision procedure to the BPCF to release the resources in the fixed broadband network.

When the V-PCRF receives the Gateway Control Session establishment indication for a PDN connection initiated for a UE connected via Fixed network access, the V-PCRF determines if a Gateway Control Session is already present for this IP-CAN session. If a Gateway Control Session is not already established, the V-PCRF shall trigger a Gateway Control Session establishment procedure from the BPCF.

For the purpose of BBF interworking for NSWO traffic, the V-PCRF functionalities described in the following are applicable:

- For roaming scenario, V-PCRF shall handle incoming request of IP-CAN session establishment received over S9a.
- If an IP-CAN session establishment request is received for a roaming user over the S9a reference point, then the V PCRF shall conclude that the IP-CAN session is used for NSWO and acts as visited access network as described in clause 6.2.1.3.3.

P.6.1.3 H-PCRF

The H-PCRF functionality defined in clause 6.2.1.4 shall apply. For the purpose of Fixed Access interworking, the H-PCRF functionalities defined in the following are applicable to the home routed scenario:

- For case 1, if an IP-CAN Session Establishment indication is received over Gx, then if this is the first IP-CAN session for this UE the H-PCRF shall establish a Gateway Control Session to the V-PCRF over S9.
- For case 1, if an IP-CAN Session Termination indication is received over Gx then if this is the last IP-CAN session for this UE, the H-PCRF shall terminate the Gateway Control session to the V-PCRF over S9.
- If a PCC Rule is generated, the H-PCRF shall send QoS rules to the V-PCRF to request admission control over S9.
- If a PCEF-Initiated IP-CAN Session Modification Procedure occurs over Gx to update, for WLAN scenario, the UE local IP Address and UDP port number, or, for the HeNB scenario, the HeNB local IP Address and UDP port number, then the H-PCRF shall send them to the V-PCRF.
- For the purpose of BBF interworking for NSWO traffic, in case of roaming, the H-PCRF shall determine PCC rules based on home operator policy for the specific UE when it receives the IP-CAN session establishment request from V-PCRF.

P.6.2 Broadband Policy Control Function (BPCF)

The BPCF is the policy Control entity in the Fixed Broadband Access network. The complete specification of the BPCF is defined in BBF WT-134 [31] and BBF WT-203 [30] and it is out of the scope of the 3GPP.

For the purpose of interworking with 3GPP network the BPCF is expected to:

- Perform admission control in fixed access or delegates admission control decision to other BBF nodes. Based on the admission control, the BPCF accepts or rejects the request received from PCRF over S9a. As with current S9, the BPCF may include the acceptable QoS in the reply if the request is rejected.
- Translate the 3GPP QoS rule as received from PCRF over S9a interface into access specific QoS parameters applicable in the Fixed Broadband access network.
- Support PCRF-triggered Gateway Control session establishment procedure over S9a.
- Support Gateway Control session modification and termination procedures over S9a.

The functionality of the BPCF in a roaming scenario is the same as in a non-roaming scenario.

For the purpose of the policy control in the BBF domain for the Non-Seamless WLAN offloaded, the BPCF shall:

- Support BPCF-initiated IP-CAN Session Establishment procedure over S9a only after successfully checking the local policies indicating that policy control for NSWO is provided.
- Support IP-CAN Session Modification procedure over S9a.
- Support IP-CAN Session Termination procedure over S9a.
- Bind the request received on E/G from AF in the Fixed Broadband access network with an existing IP-CAN session on S9a using the UE local IP address and the IMSI (if available).

P.6.3 Bearer Binding and Event Reporting Function (BBERF)

For case 2a and case 2b, the BBERF in the ePDG supports only reporting of the UE's Local IP address and UDP port number to the PCRF. Bearer binding, uplink bearer binding verification functions are not supported.

For case 2b, the BBERF in the Serving GW supports those functions specified in clause 6.2.7.1

NOTE: The IP-CAN-specific parameters provided by BBERF in Serving GW to PCRF includes the H(e)NB's Local IP address and UDP port number.

P.6.4 Policy and Charging Enforcement Function (PCEF)

PCEF supports those functions specified in clause 6.2.2.1. Case 1 additionally supports the reporting of the UE / H(e)NB Local IP address and the UDP port number, if available, in the Fixed Broadband Access at which the H(e)NB is connected to the PCRF.

P.7 PCC Procedures and Flows

P.7.1 Introduction

From the network scenarios listed in clause 7.1, the Case 1 (no Gateway Control Session over Gxx interface) applies for Fixed Broadband Access for S2a-GTP, S2b-GTP, trusted S2c and H(e)NB scenarios, the Case 2b (a Gateway Control Session over Gxx interface per IP-CAN Session) applies for S2b-PMIP and case 2a (the same Gateway Control Session over Gxx interface for all IP-CAN Sessions) applies for untrusted S2c.

In all information flows, the ePDG is present only in untrusted scenario case 2a and case 2b.

NOTE: No policy interworking solution based on S9a is defined for Fixed Broadband access interworking via S2a within this release of the specification.

P.7.2 IP-CAN Session Establishment

P.7.2.0 General

This procedure is applicable for WLAN and H(e)NB scenarios for EPC routed traffic and for NSWO traffic. This procedure is the same as described in clause 7.2 with the exceptions described in this clause.

NOTE 1: When PCRF receives the IP-CAN session establishment indication over Gx interface, PCRF determines if a Gateway Control session is already present for this IP-CAN session. If a Gateway Control session is not already established, the PCRF shall trigger a Gateway Control session establishment procedure from the BPCF.

P.7.2.1 IP-CAN Session Establishment

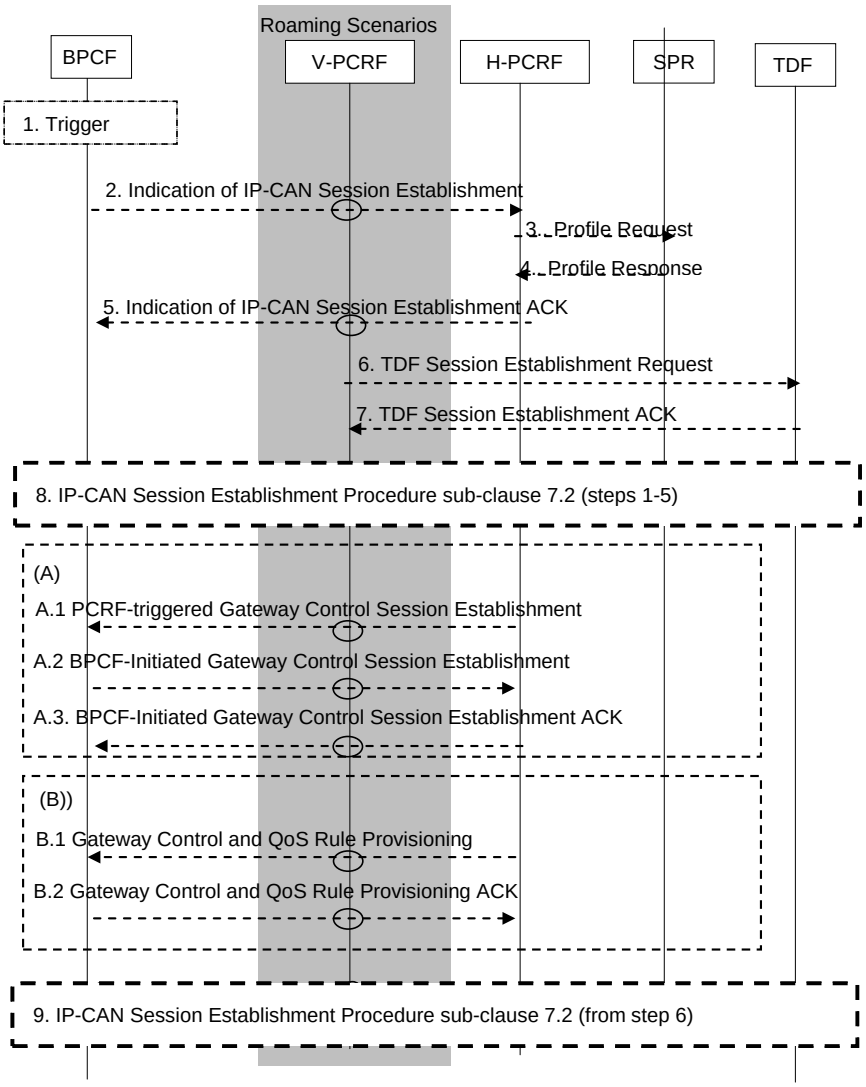

Figure P.7.2.1: IP-CAN Session Establishment for both EPC routed and NSWO traffic

This procedure is the same as described in clause 7.2 with the additions described below:

1. The BBF access network may become aware of the IMSI of the 3GPP UE if 3GPP-based access authentication (EAP-AKA/AKA') is performed. The BPCF also becomes aware of the UE local IP address.

The steps from 2 to 7 show PCC signalling to provision PCC rules and ADC rules for NSWO traffic.

2. The BPCF Initiates a IP-CAN session establishment over S9a to the PCRF for non-roaming and to the V-PCRF for roaming cases, the information contained in the request message includes IMSI, IP-CAN type, local UE IP address and the NSWO-APN. Triggered by the IP-CAN session establishment over S9 the V-PCRF triggers the S9 session establishment to the H-PCRF.

3-4. The PCRF retrieves user profile from SPR as described in clause 7.2. As part of the user profile, the PCRF may receive an indication on whether policy control for NSWO traffic should be performed for that UE.

5. The PCRF enables policy control for NSWO traffic for that UE based on operator policies and user profile information that may depend on e.g. network where the UE is offloading. The PCRF sends a reply message containing PCC Rules if policy control is enabled .

6. Triggered by the successful establishment of the IP-CAN session for the UE local IP address in step 3, the V-PCRF (roaming) and the PCRF (non-roaming) may establish a session with the TDF to provision ADC Rules for that UE local IP address (if applicable, when solicited application reporting applies and when policy control for offloaded traffic is to be performed). The PCRF provides the TDF with the UE local IP address, the IMSI, the IP-CAN type and the NSWO-APN.

7. The TDF replies as described in the clause 7.2.

The steps from 6 to 10 show PCC signalling to provision policies for EPC routed traffic.

8. IP-CAN session establishment as specified in clause 7.2 is performed, including the establishment of a Gateway Control session (if applicable), as specified below with the following additional information:

   In case 2a and case 2b, the ePDG (BBERF) initiates a Gateway Control Session Establishment procedure to provide the UE local IP address and UDP port (if available) as defined in clause P.7.5.1.

   For case 1, step 3 of clause 7.2 for WLAN scenario the PCEF includes the UE local IP address and the UDP port number (if available), while for the H(e)NB scenario the PCEF includes the H(e)NB Local IP address and the UDP port number (if available) in the Fixed Broadband Access at which the H(e)NB is connected to.

   In case 2b, S-GW (BBERF) initiates a Gateway Control Session Establishment procedure to request QoS Rules for the H(e)NB local IP address as defined in clause P.7.5.1.

   The PCRF determines, based on information (UE local IP address information or H(e)NB local IP address information) provided in the IP-CAN session establishment indication or Gateway Control Session establishment indication (if applicable), whether or not the user is connecting via a Fixed Broadband Access Network.

The steps in (A) show PCC signalling to establish a Gateway Control Session over S9a for EPC routed traffic.

A.1. Triggered by the IP-CAN session establishment indication, or triggered by Gateway control session establishment over Gxb*, the PCRF (non-roaming case) or the V-PCRF (visited access roaming case) initiates Gateway Control Session establishment with the BPCF over S9a, if no Gateway Control Session exists for the same IMSI for WLAN scenario. The PCRF includes in the request message to BPCF the IMSI, the UE local IP address and the UDP port number (if available), QoS Rules, and the ePDG IP address (for S2b-GTP access) or PDN GW IP address (for trusted S2c access), while for the H(e)NB scenario, the PCRF (Non-roaming case) or the V-PCRF (visited access roaming case) initiates Gateway Control Session establishment with the BPCF over S9a, if no Gateway Control Session exists for the same H(e)NB including the IMSI, H(e)NB Local IP address, the UDP port number (if available) and QoS Rules. For home routed, the H-PCRF initiates a Gateway Control Session over S9 to trigger the V-PCRF to establish a Gateway Control Session over S9a, for visited access, the V-PCRF initiates a Gateway Control Session over S9 to H-PCRF and the Gateway Control Session over S9a to BPCF.

A.2. For WLAN scenario the BPCF Initiates the Gateway Control session establishment on S9a including in the request message the IMSI, UE Local IP address and the UDP port (if available), while for the H(e)NB scenario it includes the IMSI, H(e)NB Local IP address and the UDP port number (if available) to the PCRF.

A.3. The PCRF reply message contains the result code.

The steps in (B) show PCC signalling to provision QoS Rules over S9a for EPC routed traffic.

B.1. Triggered by the IP-CAN session establishment indication, or triggered by Gateway control session establishment over Gxb*, the PCRF (non-roaming case) or the V-PCRF (visited access roaming case) initiates Gateway Control and QoS Rule provisioning including QoS Rules and the PDN GW IP address (for trusted S2c access and if this PDN GW IP address has not been provided before), if a Gateway Control Session exists for the same IMSI for WLAN scenario while for the H(e)NB scenario the PCRF (Non-roaming case) or the V-PCRF (visited access roaming case) initiates Gateway Control and QoS Rule provisioning, if Gateway Control Session exists for the same H(e)NB including QoS Rules.

B.2. The PCRF reply message contains the result code.

9. Remaining steps of IP-CAN session establishment procedure as defined in clause 7.2 from step 6 onwards.

P.7.2.2 Void

P.7.3 IP-CAN Session Termination

P.7.3.1 Void

P.7.3.2 IP-CAN Session Termination

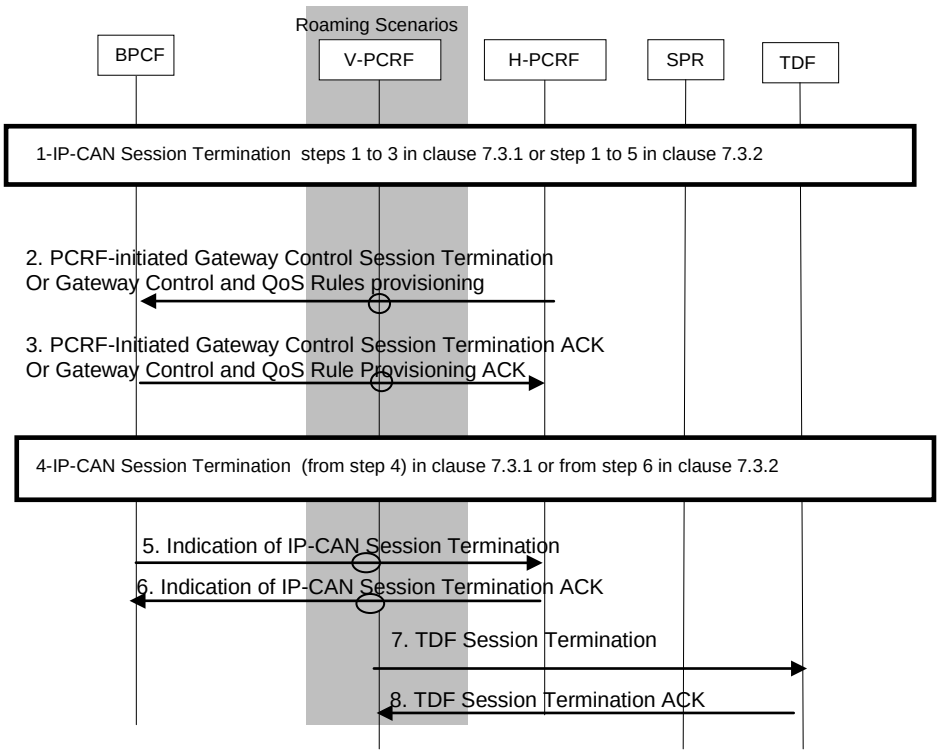

Figure P.7.3.2: IP-CAN Session Termination for either EPC routed or NSWO traffic

This procedure is applicable for both WLAN and H(e)NB scenario.

For WLAN scenarios, this procedure is performed when the PCRF knows that the 3GPP UE released a PDN connection and request the BPCF to remove the PCC/QoS Rules associated to the terminated IP-CAN session or when the last PDN connection for that 3GPP UE is released to terminate the Gateway Control Session over S9a.

For H(e)NB scenarios, this procedure is performed when the PCRF knows that the last 3GPP UE connecting to the H(e)NB released its last PDN connection and request the BPCF to release the Gateway Control session over S9a or

when a PDN connection is released to request the BPCF to remove the QoS Rules associated with the terminated IP-CAN session.

This procedure is the same as described in clauses 7.3.1 and 7.3.2, with the new steps described below:

1. The PCEF initiates the IP-CAN session termination over Gx, as defined in the clauses 7.3.1 and 7.3.2.

2. This step is triggered by the IP-CAN session termination indication in step 3 in clauses 7.3.1 and 7.3.2, the PCRF (non-roaming case) or the H-PCRF (roaming case) initiates Gateway Control Session Termination over S9a with the BPCF if this is the last IP-CAN session corresponding to this Gateway Control Session over S9a, or initiates Gateway Control and QoS Rule Provisioning over S9a to remove QoS Rules for the purpose to release resources in the Fixed Broadband Access.

NOTE: For case 2b, the description of the Gateway Control Session Termination procedure over Gxb* when triggered by the ePDG (BBERF) is described in clause P.7.5.2 and the description of the Gateway Control and QoS Rule request procedure when triggered by the ePDG (BBERF) is described in clause P.7.5.3.

For case 2a, the description of the Gateway Control Session Termination procedure over Gxb* when triggered by the PCRF is described in clause P.7.5.4.

3. The BPCF reply message contains the result code.

4. Remaining steps of IP-CAN session termination as described in clause 7.3 from step 4 onwards, with the additions that in .case 2a and roaming scenario, triggered by step2, the vPCRF initiates the Gateway control session termination with the ePDG over Gxb* if the Gateway control session over S9a bound to that IMSI has been terminated.

Steps 5, 6, 7 and 8 are triggered when the BBF access is aware that the UE is detached from BBF access. These steps are not necessarily performed at termination of the IP-CAN session but may occur at a later time.

5. If the BBF access network is aware of the UE is detached from the BBF access network, the BPCF Initiates IP-CAN session termination to the PCRF (non-roaming) and the V-PCRF (for roaming cases). Triggered by the IP-CAN session termination over S9a, the V-PCRF triggers the IP-CAN session termination over S9.

6. The PCRF reply message contains the result code for the IP-CAN session terminated.

7. Triggered by step 6, the PCRF (for non-roaming case) and the V-PCRF (for roaming cases) terminates the TDF session, if exists for the UE local IP address as described in the clause 7.3.

8. The TDF replies as described in the clause 7.3.

P.7.4 IP-CAN Session Modification

Both the PCRF-initiated IP-CAN Session Modification Procedure and the PCEF-initiated IP-CAN Session Modification Procedures as described in clause 7.4 are applicable for a 3GPP UE that attaches via a Fixed Broadband Access.

P.7.4.1 PCEF-Initiated IP-CAN Session Modification

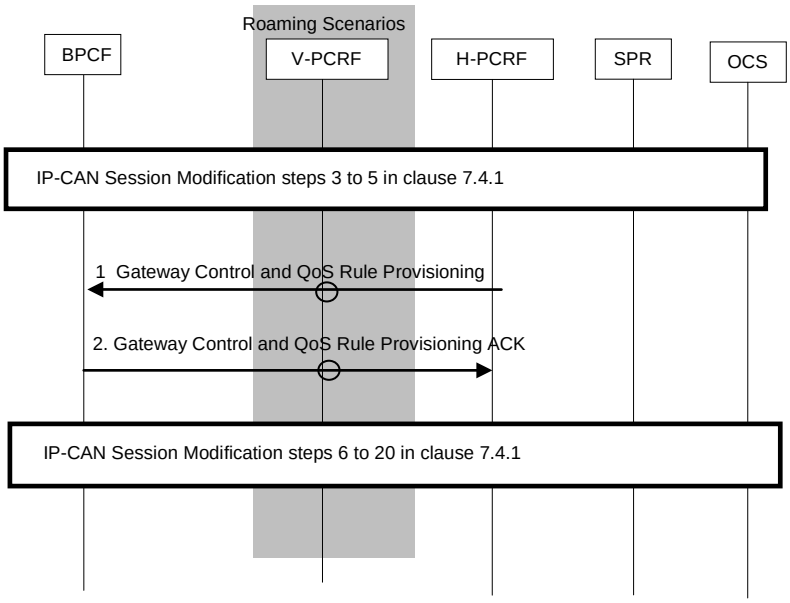

Figure P.7.4.1: PCEF-initiated IP-CAN Session Modification

This procedure is applicable for WLAN and H(e)NB scenario. This procedure is performed when the UE Local IP address, H(e)NB Local IP address or the UDP port number is changed and/or when a request for PCC Rules is received from the PCEF. This procedure is the same as described in clause 7.4.1 with the additions described below:

Step 3 in case 1, the PCEF provides the updated UE local IP address, the updated H(e)NB IP address and/or UDP port number to the PCRF.

1. The PCRF (non-roaming case) initiates Gateway Control and QoS Rule Provisioning with the BPCF to provide either:

   a. QoS-Rule with the QoS control information (i.e. QCI, GBR, MBR, ARP) and SDF information; and/or

   b UE local IP address and/or the UDP port number, the H(e)NB Local IP address may be provided in the request;

   c. Information (e.g. Session ID) that allows the BPCF to associate the request with the existing Gateway Control Session on S9a so that the fixed access can identify the traffic plane resources that are affected.

   The H-PCRF (home routed roaming case) provisions for WLAN case the UE local IP address and UDP port number (if available) and for H(e)NB case the H(e)NB local IP address and UDP port number (if available) to the V-PCRF to trigger the provisioning over S9a.

2. The BPCF translates the QoS rule as received of the S9a interface (i.e. SDF information, QCI, GBR, MBR and ARP) into access specific QoS parameters applicable in the BBF domain (the details of the mapping from 3GPP QoS parameters on S9a to QoS parameters applicable in the BBF domain is out of 3GPP scope). The BPCF may respond with a "counter-offer" in form of acceptable bandwidth and/or QoS for one or more SDFs if it cannot provide the requested QoS from the PCRF. The BPCF provides the acceptable QoS in the BBF access using 3GPP QoS parameters (i.e. QCI, GBR, MBR and ARP) and SDF information on S9a interface in the reply if the QoS validation for admission control fails. The PCRF may make a new policy decision, e.g. decide to modify or remove the affected QoS rules.

NOTE: For H(e)NB PMIP scenario, Gateway Control and QoS Rule Provisioning to the BBERF may be performed as described in clause 7.4.1.

P.7.4.2 PCRF-Initiated IP-CAN Session Modification

This procedure is initiated by the PCRF (non-roaming) or by the V-PCRF (roaming). The (V-)PCRF requests the BPCF to perform admission control. Steps (A) show how to provision QoS Rules for the UE IP address(es) allocated by EPC

and received over Gx and Steps (B) show how to provision PCC Rules to request admission control for the IP-CAN session for the UE local IP address received over S9a. Note that the TDF that is selected for EPC routed and NSWO traffic may or may not be the same TDF.

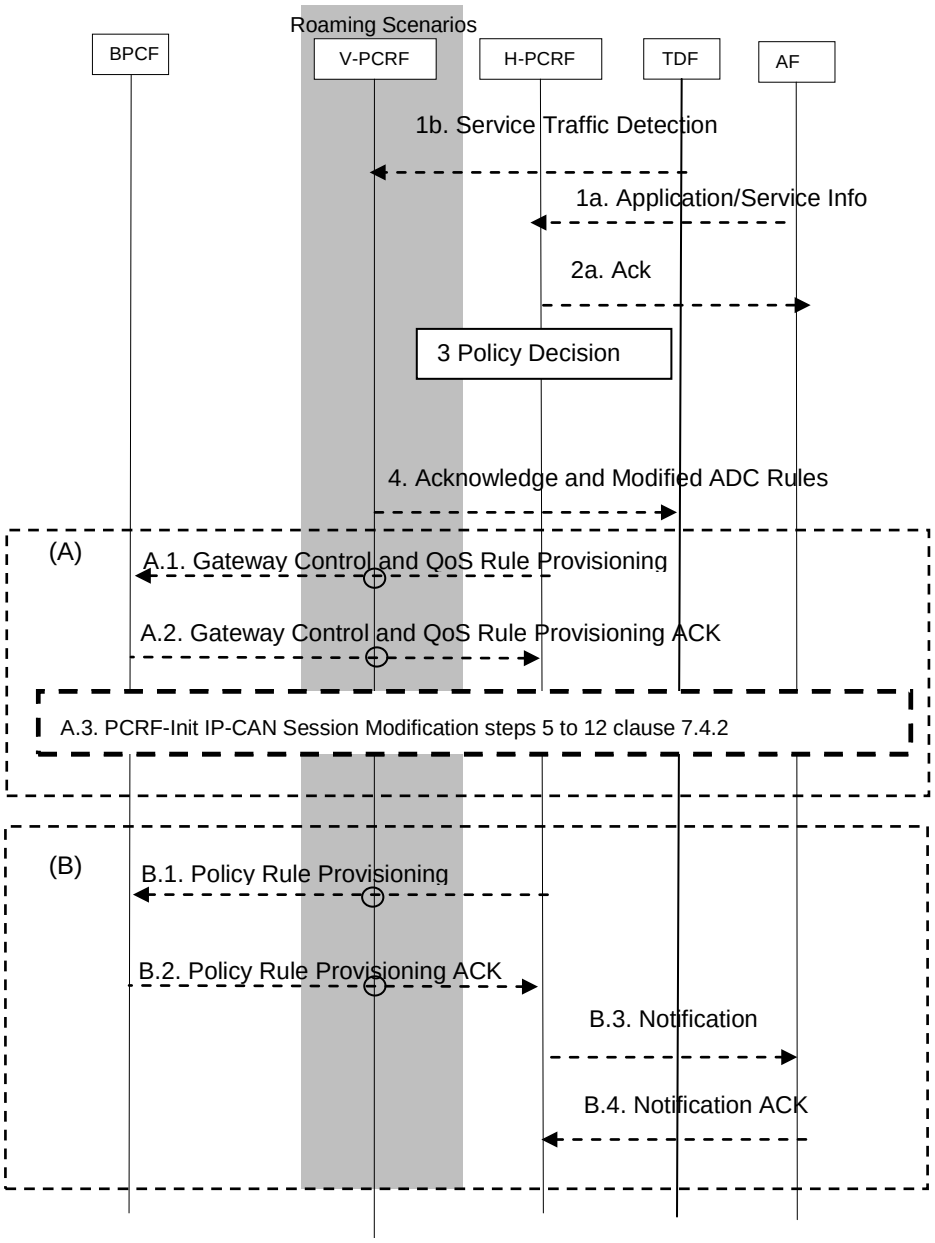

Figure P.7.4.2: PCRF-Initiated IP-CAN Session Modification

This procedure is applicable for WLAN and H(e)NB scenario. This procedure is the same as described in clause 7.4.2 with the additions described below:

1a, 2a. 1b. The AF or the TDF provides/revokes service information to the PCRF and detected event triggers if applicable as described in steps 1a, 2a and 1b in clause 7.4.2. For roaming case and for NS-WLAN offloaded traffic, the TDF provides service information and event triggers detected to the V-PCRF.

3. The PCRF for non-roaming cases or the H-PCRF for roaming cases, makes the authorization and policy decision.

4. The PCRF acknowledges to the TDF as described in clause 7.4.2.

A: The steps in (A) show PCC signalling to provision QoS Rules for EPC routed traffic.

A.1. Triggered by the step 1, the PCRF (non-roaming case) or the v-PCRF (roaming case) initiates Gateway Control and QoS Rule Provisioning to provide:

a. QoS-Rule with the QoS control information (QCI, GBR, MBR, ARP) and SDF information.

b. Information (e.g. Session ID) that allows the BPCF to associate the request with the existing Gateway Control Session on S9a so that the fixed access can identify the traffic plane resources that are affected.

A.2. The BPCF translates the QoS rule as received of the S9a interface (i.e. QCI, MBR, GBR and ARP) into access specific QoS parameters applicable in the BBF domain (the details of the mapping from 3GPP QoS parameters on S9a to QoS parameters applicable in the BBF domain is out of 3GPP scope). The BPCF may respond with a "counter-offer" in form of acceptable bandwidth and/or QoS for one or more SDFs if it cannot provide the requested QoS from the PCRF. The BPCF provides the acceptable QoS in the BBF access using 3GPP QoS parameters on S9a interface (i.e. QCI, GBR) in the reply if the QoS validation for admission control fails. The PCRF may make a new policy decision, e.g. decide to modify or remove the affected QoS rules.

A.3. PCC Rules are installed in the PCEF as described in clause 7.4.2 and AF is notified if subscribed to the notification of the resource allocation request/modification.

B: The steps in (B) show PCC signalling to provision PCC Rules for NS-WLAN offloaded traffic.

B.1. Triggered by the step 3, the PCRF (non-roaming case) or the H-PCRF (roaming case) initiates Policy Rule Provisioning towards the BPCF to provide QoS-Rules for the UE local IP address.

B.2. The BPCF translates the PCC rules as received of the S9a interface (i.e. SDF information, QCI, MBR, GBR and ARP) into access specific QoS parameters applicable in the BBF domain as described in A.2.

B.3. If the AF requested it, the PCRF notifies the AF (e.g. transmission resources are established/released/lost).

B.4. The AF acknowledges the notification from the PCRF.

P.7.4.3 BPCF-Initiated IP-CAN Session Modification

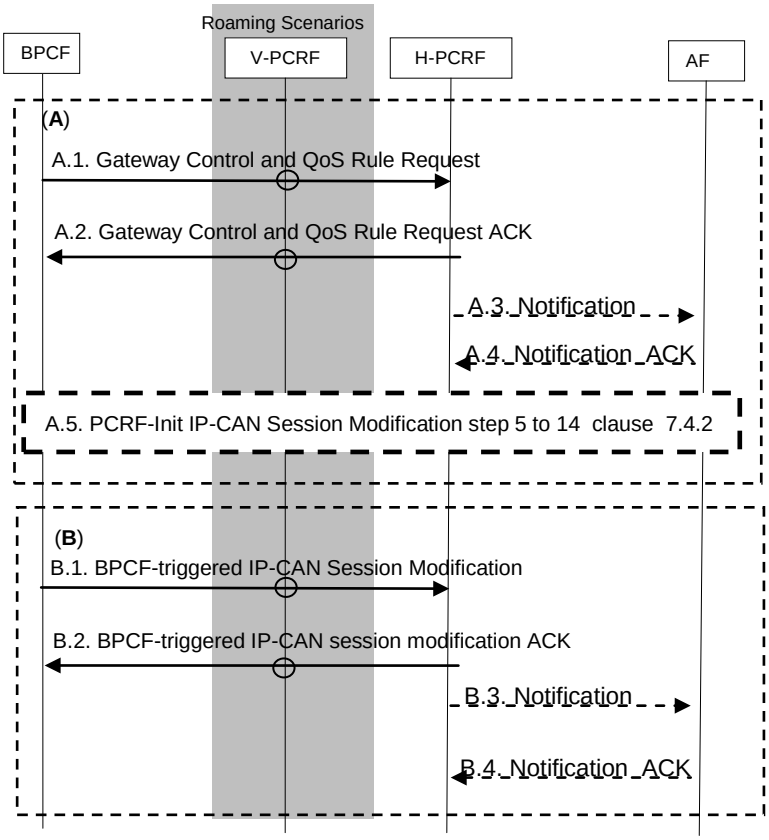

Figure P.7.4.3: BPCF-Initiated IP-CAN Session Modification

The trigger for this procedure is that the BPCF has pre-empted some resources and wants to report a QoS rule failure to the PCRF, or when the BBF network cannot sustain the Bandwidth allocated to a particular traffic class/DSCP aggregate.

This procedure is applicable for both WLAN and H(e)NB scenarios.

NOTE: Whether additional condition and criteria specific for BBF network and defined by BBF forum are applicable for trigger BPCF-Initiated IP-CAN session modification is out of the scope of 3GPP definition.

A: The steps in (A) show PCC signalling to report QoS Rule failure to PCRF for the EPC routed traffic.

A.1. The BPCF initiates Gateway Control and QoS Rule Request to report QoS Rule failure to PCRF. The request includes a report identifying the QoS Rules that failed and a reason.

A.2. The PCRF acknowledge the request and may initiate PCRF-initiated IP-CAN session modification.

Step 5 to 14 is the same as described in clause 7.4.2.

A.3. If the AF requested it, the PCRF notifies the AF (e.g. transmission resources are released).

A.4. The AF acknowledges the notification from the PCRF.

A.5. The PCRF-initiated IP-CAN session modification as described in clause P.7.4.2 may take place.

B: The steps in (B) show PCC signalling to report PCC Rule failure to PCRF for NSWO traffic.

B.1. The BPCF initiates IP-CAN session modification to report PCC Rule failure to PCRF.

A.2. The PCRF acknowledges the request.

A.3. If the AF requested it, the PCRF notifies the AF (e.g. transmission resources are released).

A.4. The AF acknowledges the notification from the PCRF.

P.7.5 Gateway Control Session Procedures

P.7.5.1 BBERF-Initiated Gateway Control Session Establishment

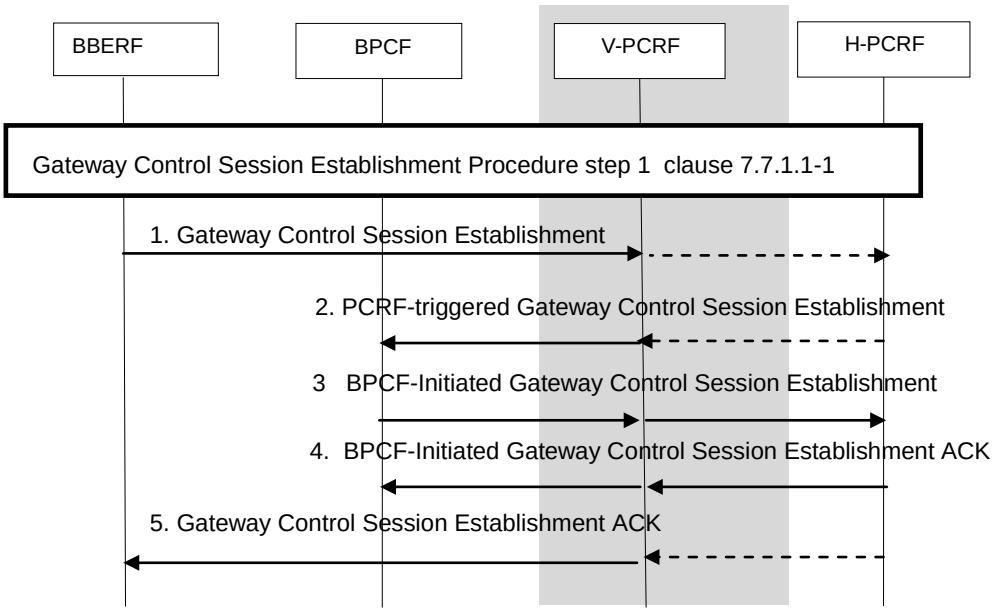

Figure P.7.5.1: PCRF-triggered Gateway Control Session Establishment for EPC routed traffic

This procedure is applicable for both WLAN and H(e)NB PMIP. This procedure is the same as described in clause 7.7.1.1 with the additions described below:

1. For the WLAN case, the ePDG (BBERF) initiates a Gateway Control Session Establishment as defined in clause 7.7.1 with the PCRF (for non-roaming) and with the V-PCRF (for home routed and visited access roaming cases) including the IMSI, APN (if available), the UE Local IP address, the UDP port number if available, while for H(e)NB case the SGW(BBERF) initiates a Gateway Control Session Establishment as defined in clause 7.7.1 with the PCRF (for non-roaming) and with V-PCRF (for home routed and visited access roaming case) including the H(e)NB local IP address and the UDP port number (if available) in the Fixed Broadband Access at which the H(e)NB is connected to.

2. For WLAN case, the PCRF (non-roaming case) or the V-PCRF (home routed and visited access roaming cases) triggers Gateway Control Session establishment with the BPCF over S9a, if this is the first Gateway Control Session for the same IMSI, the PCRF includes in the request message to BPCF the IMSI, the UE local IP address and the UDP port number (if available) and the ePDG IP address (for S2b-PMIP and untrusted S2c access).

   For the H(e)NB case, the PCRF (non-roaming case) or the V-PCRF (home routed and visited access roaming cases) triggers Gateway Control Session establishment with the BPCF over S9a, if this is the first Gateway Control Session for the same H(e)NB, the PCRF includes in the request message to BPCF the IMSI, the H(e)NB IP address and the UDP port number (if available).

3. The BPCF Initiates the Gateway Control session establishment to the PCRF (for non-roaming case), to the V-PCRF (for visited access and home routed roaming case) including in the request message the IMSI. Triggered by the BPCF-initiated Gateway Control Session establishment over S9a the V-PCRF sends the Gateway Control Session Establishment over S9.

4. The PCRF in non-roaming and the V-PCRF for roaming cases reply message contains the result code.

5. For H(e)NB case, the PCRF provisions QoS Rules to the BBERF, while for the WLAN case, the PCRF sends a result code in the reply message.

   No QoS Rules and no event triggers are provided to the BBERF for WLAN scenarios.

P.7.5.2 GW(BBERF)-Initiated Gateway Control Session Termination

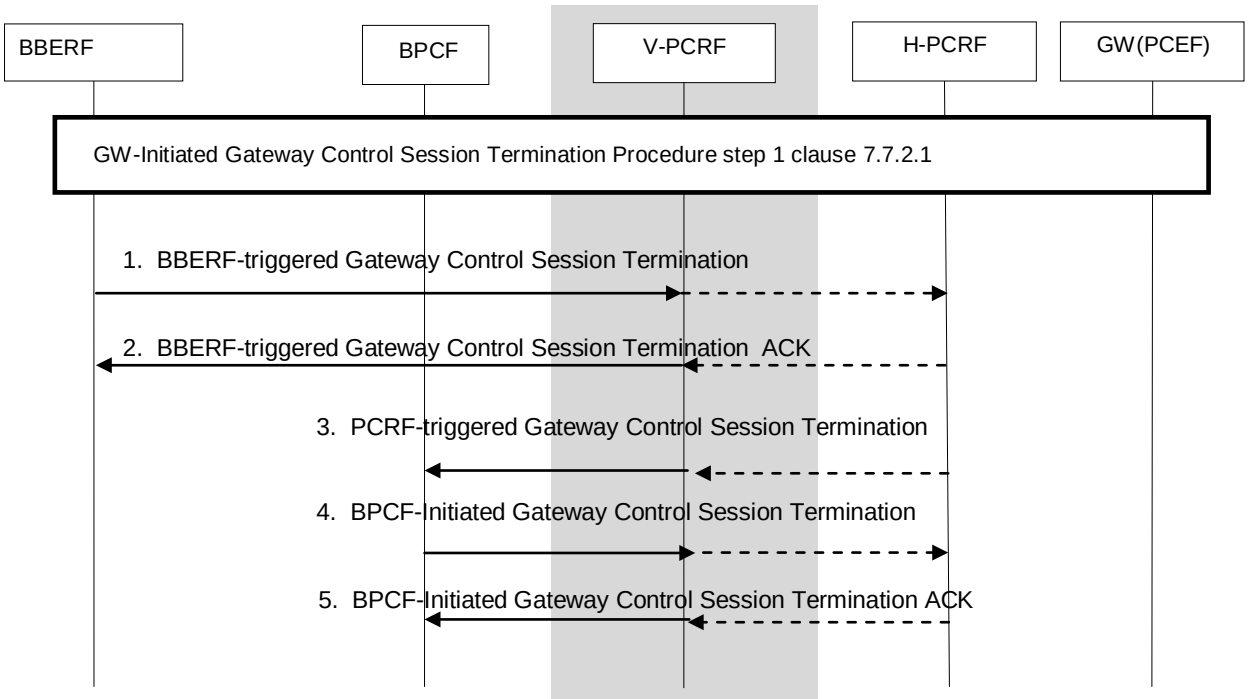

Figure P.7.5.2: Gateway Control Session Termination over S9a

This procedure is applicable for both WLAN and H(e)NB scenarios. This procedure is the same as described in clause 7.7.2.1 with the additions described below:

1. For WLAN scenarios, the ePDG (BBERF) initiates a Gateway Control Session Termination with the PCRF (for non-roaming) and with the V-PCRF (for home routed and visited access roaming cases).

For H(e)NB scenarios, the SGW (BBERF) initiates a Gateway Control Session Termination as defined with the PCRF (for non-roaming) and with the V-PCRF (for home routed and visited access roaming cases).

2. The PCRF sends a response code.

3. The PCRF (non-roaming case) or the V-PCRF (roaming case) initiates a Gateway Control Session Termination over S9a with the BPCF to terminate the Gateway Control Session with the BPCF if this is the last Gateway Control Session bound to the Gateway Control session over S9a.

4. The BPCF terminates the Gateway Control Session over S9a to the PCRF. In the roaming scenario, V-PCRF (for both home routed and visited access) sends a Gateway Control Session Termination over S9 to the PCRF.

5. The PCRF sends a response code.

P.7.5.3 Gateway Control and QoS Rule Request from ePDG/Serving GW

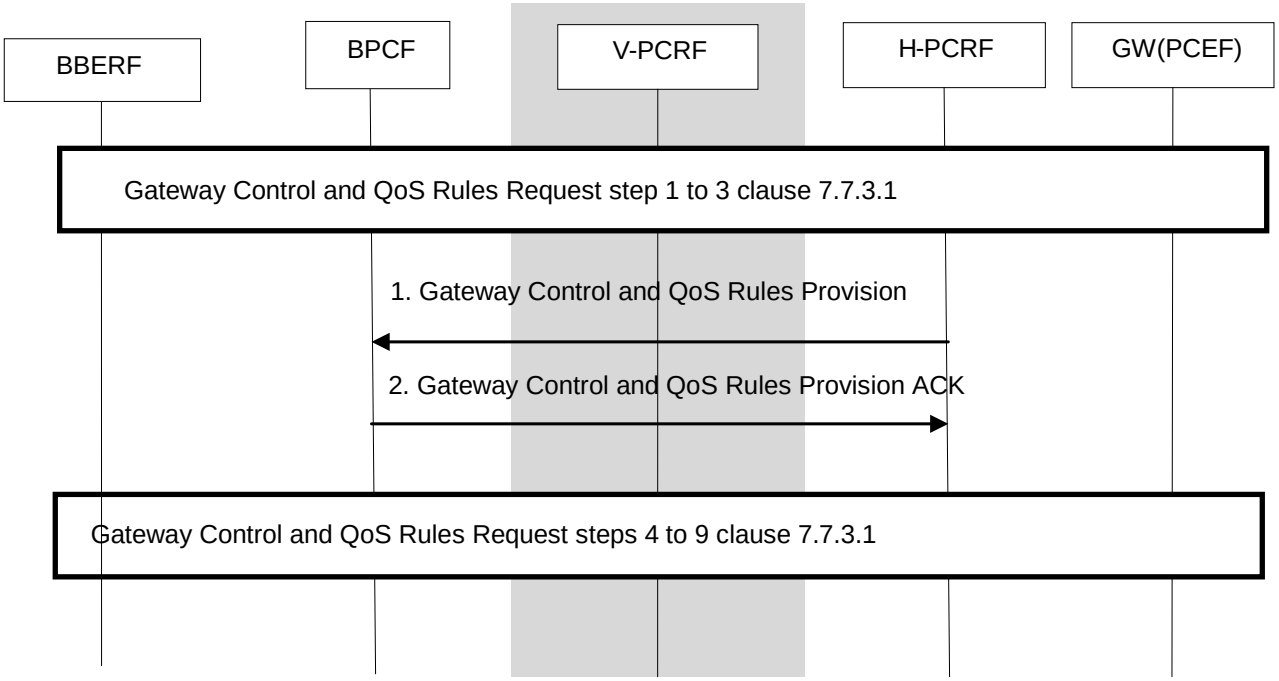

Figure P.7.5.3: Gateway Control and QoS Rule Request for EPC Routed Traffic

This procedure is applicable for both WLAN and H(e)NB PMIP. This procedure is the same as described in clause 7.7.3.1 with the exceptions described below:

In case 2b and case 2a for WLAN scenario, the ePDG (BBERF) may initiate a Gateway Control and QoS Rules Request Procedure to provide the updated UE local IP address and the UDP port number, if available, while for H(e)NB scenario the SGW(BBERF) may initiate a Gateway Control and QoS Rule Procedure to provide the updated H(e)NB local IP address and the UDP port number (if available) in the Fixed Broadband Access at which the H(e)NB is connected to.

1. For the WLAN scenario, triggered by the Gateway Control and QoS Rules Request Procedure in step 2 of clause 7.7.3.1, the PCRF (non-roaming case) or the v-PCRF (roaming case) initiates Gateway Control and QoS Rules Provision Procedure. The updated UE local IP address and/or the UDP port number are provided in the procedure if available, while for H(e)NB scenario the PCRF (non-roaming) or the H-PCRF (for visited access and home routed) may initiate a Gateway Control and QoS Rule Procedure to provide the updated H(e)NB local IP address and the UDP port number (if available) in the Fixed Broadband Access at which the H(e)NB is connected to.

   For H(e)NB PMIP scenario, the PCRF may provide:

   a. QoS-Rule with the QoS control information (i.e. QCI, GBR, MBR, ARP) and SDF information.

b. Information (e.g. Session ID) that allows the BPCF to associate the request with the existing Gateway Control Session on S9a so that the fixed access can identify the traffic plane resources that are affected.

2. The BPCF replies with a response code, when QoS Rules were provided by the PCRF, the BPCF translates the QoS rule as received of the S9a interface into access specific QoS parameters applicable in the BBF domain . The BPCF may respond with a "counter-offer" in form of acceptable bandwidth and/or QoS for one or more SDFs if it cannot provide the requested QoS from the PCRF. The BPCF provides the acceptable QoS in the BBF access using 3GPP QoS parameters on S9a interface (i.e. QCI, GBR) in the reply if the QoS validation for admission control fails. The PCRF may make a new policy decision, e.g. decide to modify or remove the affected QoS rules.

NOTE: For H(e)NB PMIP scenario, Gateway Control and QoS Rule Provisioning to the BBERF may be performed as described in clause 7.4.1.

P.7.5.4 PCRF-Initiated Gateway Control Session Termination

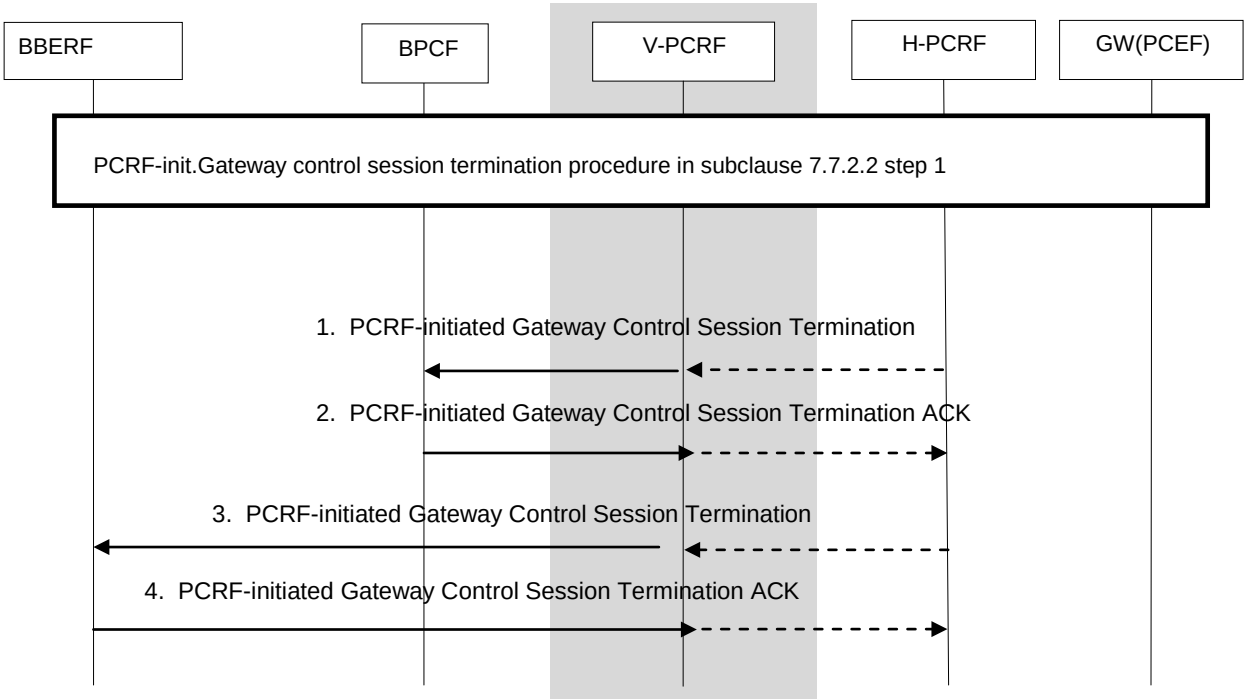

Figure P.7.5.4: PCRF-Initiated Gateway Control Session Termination

This procedure is applicable for WLAN scenario. This procedure is the same as described in clause 7.7.2.2 steps 1 with the additions described below:

1. For the non-roaming and roaming home routed cases, triggered by step 1 in clause 7.7.2.2, the (h)PCRF sends a PCRF-initiated Gateway Control Session termination procedure with BPCF over S9a. For the roaming LBO case, triggered by step 1 in clause 7.7.2.2, the (v)PCRF sends a PCRF-Initiated Gateway control session termination procedure with BPCF over S9a.

2. The BPCF sends PCRF-Initiated Gateway Control Session Termination acknowledgement.

3. Triggered by step 1 in clause 7.7.2.2, the (h)PCRF (for non-roaming case and home routed roaming case) sends a PCRF-initiated Gateway Control Session Termination over Gxb* with the ePDG (BBERF). Triggered by the Gateway Control Session Termination over S9a and S9 with the BPCF, the V-PCRF (roaming LBO case) sends a PCRF-initiated Gateway Control Session Termination over Gxb* with the ePDG (BBERF).

4. The ePDG (BBERF) sends a sends PCRF-Initiated Gateway Control Session Termination acknowledgement.

P.7.6 PCRF Discovery and Selection

P.7.6.1 PCRF Discovery and Selection by BPCF

When the BPCF knows that a 3GPP UE attached via a Fixed Broadband access network and learns the IMSI and the NSWO-APN, the BPCF initiates the IP-CAN session establishment for NSWO offloaded traffic, the BPCF finds the PCRF using the DRA as described in clause 7.6.1.

When the BPCF is requested to establish a Gateway Control Session over S9a by PCRF, the BPCF uses the PCRF address provided in the request to establish the Gateway Control Session over S9a.

In roaming scenarios, the selected V-PCRF shall belong to the same V-PLMN selected during the 3GPP access authentication procedure. The BPCF uses the VPLMN id to find the V-DRA in the VPLMN. The V-PCRF finds the DRA in the HPLMN based on the IMSI and the APN if available as described in clause 7.6.1.

P.7.6.2 PCRF Discovery and Selection by AF/TDF unsolicited application reporting for NS-WLAN offloaded traffic

For PCRF discovery and selection by AF/TDF unsolicited application reporting for NS-WLAN offloaded traffic the procedure described in clause 7.6.1 applies.

P.7.7 BPCF Discovery and Selection

For PCRF-triggered Gateway Control Session establishment, the PCRF (for non-roaming case) and the V-PCRF (for home routed and visited access roaming cases) is configured with IP address range mappings { (IPx..IPy) -> BBF network entry point}. The PCRF (for non-roaming) and the V-PCRF (for roaming cases) selects the correct BBF network entry point based on UE Local IP address for WLAN access and based on H(e)NB Local IP address received from the PCEF/BBERF for H(e)NB case. The implementation of a BBF network entry point is out-of-scope for 3GPP e.g. be a BPCF or a DRA. The H-PCRF sends the H(e)NB/UE local IP address to the V-PCRF over the S9 interface.

For WLAN and H(e)NB in Home Routed roaming case, for PCRF-triggered Gateway Control Session establishment, H-PCRF finds V-DRA according to the VPLMN ID if received via Gx session, and then discovers V-PCRF by V-DRA. V-PCRF selects the correct BBF network entry point with the given UE local IP address and the H(e)NB Local IP address in the BBF access network at which the H(e)NB is connected to respectively.

NOTE: Mobility procedures that implies selection of a new BPCF are not supported in this Release.

P.7.8 TDF Discovery and Selection for NS-WLAN offloaded traffic

For the solicited application reporting, the TDF address may be preconfigured in the PCRF. Alternatively, the PCRF may receive the TDF address as a part of IP-CAN session signalling for NS-WLAN offloaded traffic over S9a.

NOTE: It is assumed that UL and DL traffic are routed via the same TDF.

P.8 3GPP HNB Procedures – CS Support

P.8.1 S9a CS Session Establishment

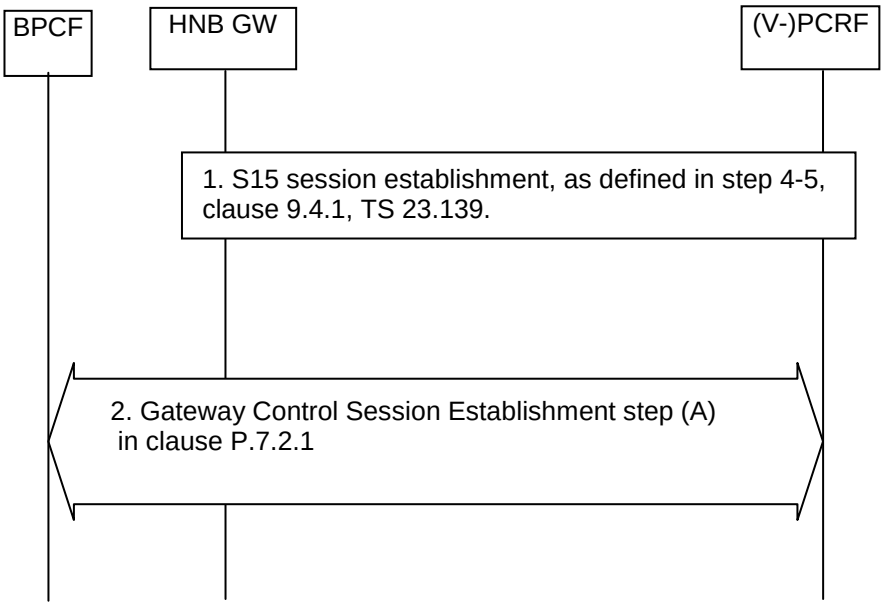

Figure P.8.1-1: S9a CS Session Establishment

This procedure is applicable to HNB for QoS enforcement for CS services.

1) S15 session establishment procedure is performed, which can be referred to step 4-5, clause 9.4.1, TS 23.139 [29].

2) The (v-)PCRF initiates Gateway Control Session Establishment procedure with BPCF. The description of this step is the same as steps (A) in clause P.7.2.1.

P.8.2 PCRF initiated S9a CS Session Modification

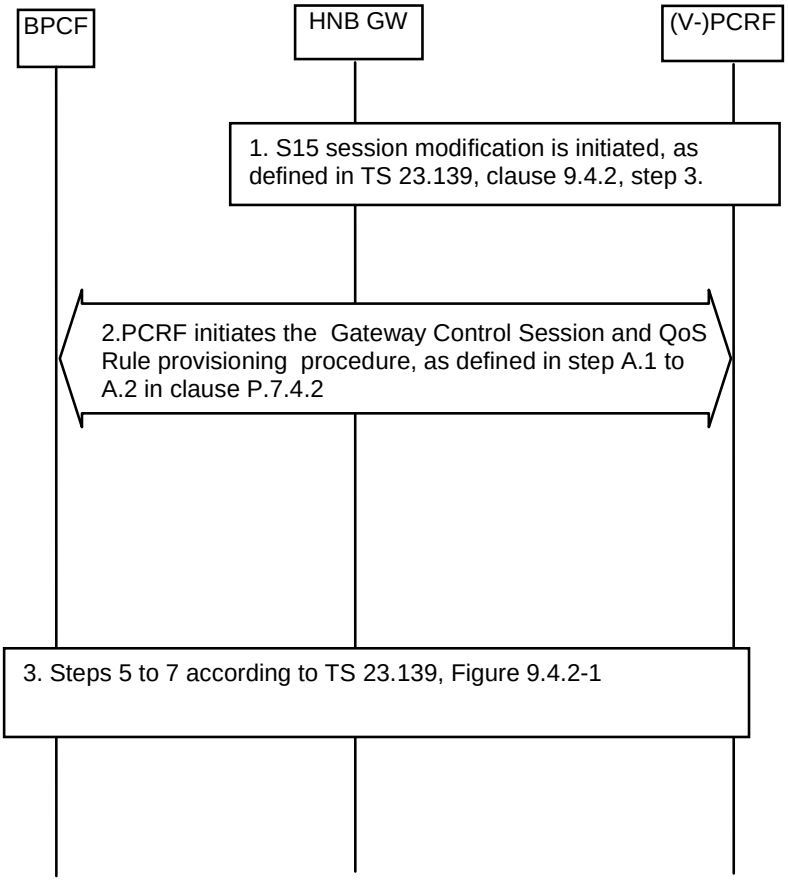

Figure P.8.2-1: PCRF initiated S9a CS Session Modification

This procedure is performed when the first UE or a subsequent UE connected to a HNB requesting a CS call.

1) The HNB GW sends the S15 session modification message to the PCRF, which can be referred to TS 23.139 [29], clause 9.4.2, step3.

2) The PCRF (V-PCRF) initiates the Gateway Control and QoS Rules Provisioning procedure to the BPCF as described in step from A.1 to A.2 in clause P.7.4.2.

3) The remaining steps are the same as for TS 23.139 [29], clause 9.4.2, steps 5-7.

P.8.2A BPCF initiated S9a CS Session Modification

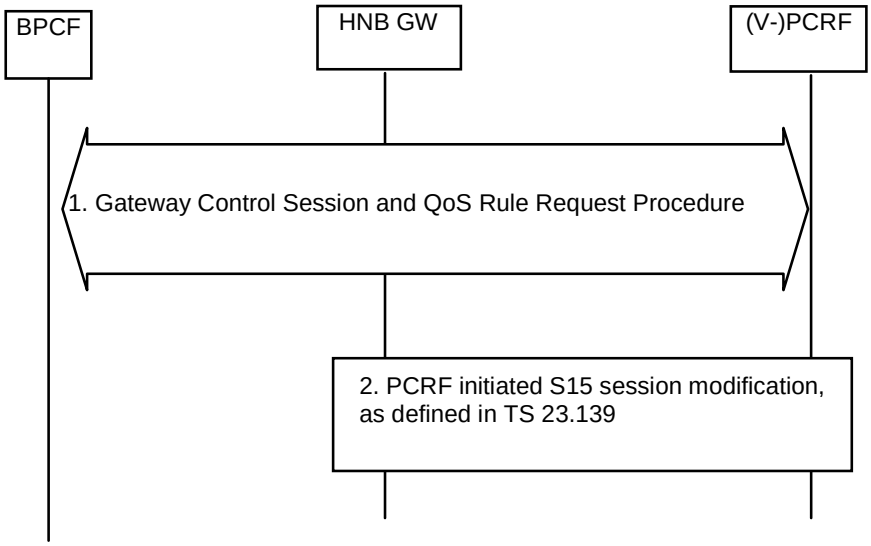

Figure P.8.2A-1: BPCF initiated S9a CS Session Modification

1) This step shows PCC signalling to report QoS Rule failure to (v)PCRF for the CS traffic.

NOTE: Whether additional condition and criteria specific for BBF network and defined by BBF forum are applicable for trigger BPCF-Initiated S9a CS Session Modification is out of the scope of 3GPP definition.

The BPCF initiates Gateway Control and QoS Rule Request to report QoS Rule failure to (v)PCRF. The request includes a report identifying the QoS Rules that failed and a reason. The (v)PCRF acknowledges the request.

2) The (v)PCRF sends the S15 session modification request message to the HNB GW. The (v)PCRF includes the report identifying the QoS Rules that failed and a reason derived from the BPCF. The BPCF response the S15 session modification to the (v)PCRF, which is according to TS 23.139 [29].

P.8.3 S9a CS Session Termination

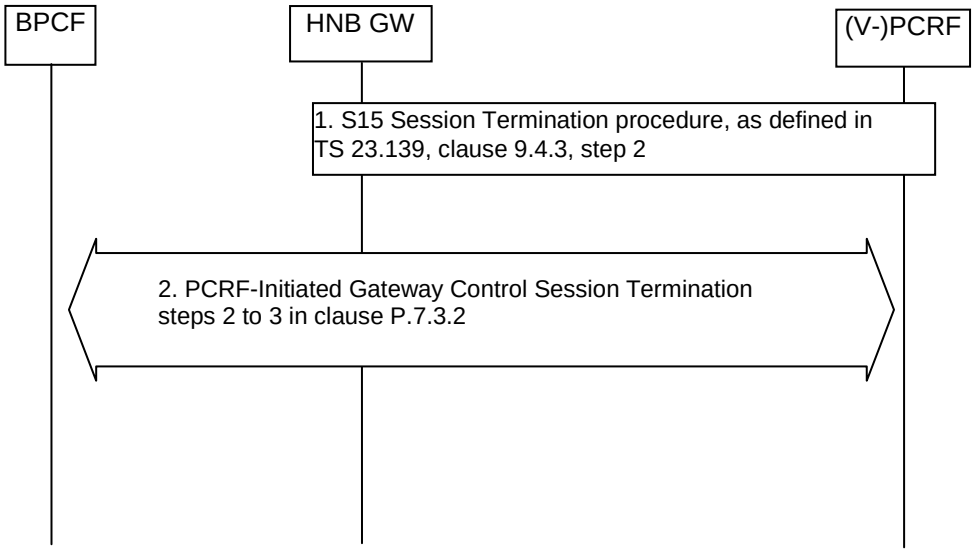

Figure P.8.3-1: S9a CS Session Termination

1) The HNB GW sends a S15 session termination request to the to (v-)PCRF and then the (v-)PCRF acknowledges the request. This can be referred to TS 23.139 [29], clause 9.4.3, step 2.

2) The PCRF (V-PCRF) initiated the GW control session termination as defined in steps 2 and 3 in clause P.7.3.2.

Annex Q (informative): Change history

Change history								
Date	**TSG #**	**TSG Doc.**	**CR**	**Rev**	**Cat**	**Subject/Comment**	**Old**	**New**
2010-12	SP-50	SP-100695	0485	2	B	TDF: TS 23.203 Clause 3 and Clause 4 modifications	10.2.0	11.0.0
2010-12	SP-50	SP-100695	0486	2	B	TDF: TS 23.203 Clause 5 modifications	10.2.0	11.0.0
2010-12	SP-50	SP-100695	0487	2	B	TDF: TS 23.203 Clause 6 modifications	10.2.0	11.0.0
2010-12	SP-50	SP-100695	0488	2	B	TDF: TS 23.203 Clause 7 modifications	10.2.0	11.0.0
2011-01	-	-	-	-	-	Update of LTE logo to LTE-Advanced logo	11.0.0	11.0.1
2011-03	SP-51	SP-110063	0494	2	A	PS-to-CS HO indicator impacts to PCC	11.0.1	11.1.0
2011-03	SP-51	SP-110080	0504	1	C	Mandating the enforcement actions support by TDF	11.0.1	11.1.0
2011-03	SP-51	SP-110080	0505	2	F	Clean-up of TS 23.203 for TDF related functionality	11.0.1	11.1.0
2011-03	SP-51	SP-110075	0508	1	A	QoS setting for Pre-R7 UE	11.0.1	11.1.0
2011-03	SP-51	SP-110080	0514	1	F	Clarification of ADC rules ACK in the PCRF-init IP-CAN session Modification Procedure	11.0.1	11.1.0
2011-03	SP-51	SP-110080	0515	1	B	Addition of usage monitoring to Application detection	11.0.1	11.1.0
2011-06	SP-52	SP-110333	0518	3	A	Clarify the usage reporting for Sponsored Data Connectivity	11.1.0	11.2.0
2011-06	SP-52	SP-110333	0519	3	A	Sponsored data connectivity profile in SPR	11.1.0	11.2.0
2011-06	SP-52	SP-110333	0521	2	A	Sponsored data connectivity in the roaming case	11.1.0	11.2.0
2011-06	SP-52	SP-110340	0522	4	B	Functional description of the impacts of Sy reference point.	11.1.0	11.2.0
2011-06	SP-52	SP-110340	0523	7	B	Sy reference point. Information flows	11.1.0	11.2.0
2011-06	SP-52	SP-110340	0524	8	B	Definitions and concepts used in Sy reference point	11.1.0	11.2.0
2011-06	SP-52	SP-110340	0525	3	B	Requirements on Sy reference point	11.1.0	11.2.0
2011-06	SP-52	SP-110340	0526	2	B	Subscriber Spending Limits: TS 23.203 Clause 5 modifications	11.1.0	11.2.0
2011-06	SP-52	SP-110342	0529	2	B	Introducing vSRVCC indicator in PCC	11.1.0	11.2.0
2011-06	SP-52	SP-110323	0534	1	A	Clarification of SRVCC usage of QCI-1	11.1.0	11.2.0
2011-06	SP-52	SP-110337	0538	1	A	Event Trigger for Pre-R7 QoS issue	11.1.0	11.2.0
2011-06	SP-52	SP-110325	0539	-	A	Bearer Control Mode for multiple PDN connections for EPC based cdma2000 HRPD access	11.1.0	11.2.0
2011-06	SP-52	SP-110341	0541	2	F	Align PCEF rules for service awareness with the TDF rules	11.1.0	11.2.0
2011-06	SP-52	SP-110341	0542	2	F	Clarification of general principles of PCRF Discovery and Selection	11.1.0	11.2.0
2011-06	SP-52	SP-110341	0543	2	F	Clarification of ADC rules modifications	11.1.0	11.2.0
2011-06	SP-52	SP-110341	0546	1	F	Clarifications on Traffic detection Functionality	11.1.0	11.2.0
2011-09	SP-53	SP-110463	0553	2	B	New normative Annex: Fixed Broadband access interworking. Requirements	11.2.0	11.3.0
2011-09	SP-53	SP-110463	0552	3	B	New normative Annex: Fixed Broadband access interworking. Information Flows	11.2.0	11.3.0
2011-09	SP-53	SP-110652	0570	5	B	New normative Annex: Fixed Broadband access interworking Functional entities	11.2.0	11.3.0
2011-09	SP-53	SP-110463	0574	2	B	New Normative Annex- BBF Access Interworking Reference Architecture and Points	11.2.0	11.3.0
2011-09	SP-53	SP-110463	0575	3	B	New Normative Annex: S9* HNB CS Procedures	11.2.0	11.3.0
2011-09	SP-53	SP-110467	0554	4	C	Time of day procedures for ADC rules	11.2.0	11.3.0
2011-09	SP-53	SP-110649	0555	4	C	Identity/location info for the TDF	11.2.0	11.3.0
2011-09	SP-53	SP-110467	0557	1	C	Order of PCC rules and ADC rules enforcement in the PCEF	11.2.0	11.3.0
2011-09	SP-53	SP-110467	0558	1	F	Redirection function clarifications	11.2.0	11.3.0
2011-09	SP-53	SP-110467	0561	3	F	Service data flow templates updating report at the TDF	11.2.0	11.3.0
2011-09	SP-53	SP-110467	0565	1	F	Alignments with ADC rules approach and other corrections	11.2.0	11.3.0
2011-09	SP-53	SP-110466	0572	1	F	Sy Correction	11.2.0	11.3.0
2011-12	SP-54	SP-110733	0590	1	A	Removal of Service Data Flow Based Credit Control Function from PCC Architecture	11.3.0	11.4.0
2011-12	SP-54	SP-110743	0587	-	F	Clarification on BBAI related Annex P.7	11.3.0	11.4.0
2011-12	SP-54	SP-110743	0606	1	F	IPv6 address support by BBAI	11.3.0	11.4.0
2011-12	SP-54	SP-110744	0577	-	D	Corrections for SAPP	11.3.0	11.4.0
2011-12	SP-54	SP-110744	0578	2	F	Explicit mentioning of some location/access network information event triggers for the subscription by TDF	11.3.0	11.4.0
2011-12	SP-54	SP-110741	0584	1	F	Sy policy counter reporting scope clarification	11.3.0	11.4.0
2012-03	SP-55	SP-120075	0510	1	A	The reasonable corrections to 23.203	11.4.0	11.5.0
2012-03	SP-55	SP-120065	0582	3	A	TFT operation when SGSN accesses to PGW	11.4.0	11.5.0
2012-03	SP-55	SP-120087	0620	-	D	Editorial corrections to 23.203	11.4.0	11.5.0

Change history								
Date	**TSG #**	**TSG Doc.**	**CR**	**Rev**	**Cat**	**Subject/Comment**	**Old**	**New**
2012-03	SP-55	SP-120063	0625	3	A	Corrections to deferred rule procedures	11.4.0	11.5.0
2012-03	SP-55	SP-120065	0629	-	A	QoS Mapping	11.4.0	11.5.0
2012-03	SP-55	SP-120082	0631	4	F	Removal of Subscriber Id from Intermediate Spending Limit Report Request	11.4.0	11.5.0
2012-03	SP-55	SP-120087	0643	-	D	Editorial correction on the numbering of NOTEs in TS 23.203	11.4.0	11.5.0
2012-03	SP-55	SP-120087	0644	1	F	Conditions of accumulated usage reporting correction	11.4.0	11.5.0
2012-03	SP-55	SP-120087	0645	1	F	Including the BBERF interaction in the subscription information update procedure	11.4.0	11.5.0
2012-03	SP-55	SP-120087	0647	-	D	Editorial correction of PCC architecture	11.4.0	11.5.0
2012-03	SP-55	SP-120087	0648	1	F	Adding usage monitoring control function over Gx reference point	11.4.0	11.5.0
2012-03	SP-55	SP-120087	0649	1	F	Some corrections of IP-CAN session establishment procedure	11.4.0	11.5.0
2012-03	SP-55	SP-120069	0653	1	A	PCRF addressing for MUPSAP	11.4.0	11.5.0
2012-03	SP-55	SP-120068	0660	1	A	Correcting Usage Monitoring event trigger	11.4.0	11.5.0
2012-03	SP-55	SP-120087	0663	1	C	Usage monitoring signalling congestion handling	11.4.0	11.5.0
2012-03	SP-55	SP-120085	0664	1	B	Updates to TS 23.203 for WLAN with S2a	11.4.0	11.5.0
2012-03	SP-55	SP-120077	0666	1	F	Cleanup of editor's notes in 23.203 Annex P	11.4.0	11.5.0
2012-03	SP-55	SP-120077	0667	1	B	Building Block 2 architecture	11.4.0	11.5.0
2012-03	SP-55	SP-120077	0668	3	B	P.5 Functional description	11.4.0	11.5.0
2012-03	SP-55	SP-120077	0669	6	B	PCC Procedures and Flows	11.4.0	11.5.0
2012-03	SP-55	SP-120077	0670	3	B	PCRF selection procedure for WLAN offloaded traffic	11.4.0	11.5.0
2012-03	SP-55	SP-120080	0671	1	C	Include support of other media for IMS Emergency Session	11.4.0	11.5.0
2012-03	SP-55	SP-120173	0672	2	B	Declaring support for extended TFT filter format	11.4.0	11.5.0
2012-03	SP-55	SP-120084	0673	-	B	PCC support for rSRVCC	11.4.0	11.5.0
2012-03	SP-55	SP-120077	0678	2	F	Corrections on GW Control and QoS Rules Request Procedure	11.4.0	11.5.0
2012-03	SP-55	SP-120077	0679	2	F	Corrections on BPCF Discovery and Selection	11.4.0	11.5.0
2012-03	SP-55	SP-120077	0682	1	F	Differentiate the QoS parameter between offload traffic and EPC-routed traffic	11.4.0	11.5.0
2012-03	SP-55	SP-120081	0686	3	B	Changes to PCC to support Network Location for IMS functionality	11.4.0	11.5.0
2012-03	SP-55	SP-120077	0688	1	F	Clarification on 3GPP HNB Procedures for CS Support	11.4.0	11.5.0
2012-03	SP-55	SP-120077	0690	2	B	Reference points enhancement with BBAI	11.4.0	11.5.0
2012-03	SP-55	SP-120077	0692	3	B	Annex P High level requirements for BB2	11.4.0	11.5.0
2012-03	SP-55	SP-120077	0693	3	B	P.6 Functional Entities enhancement for BBII NS-WLAN	11.4.0	11.5.0
2012-06	SP-56	SP-120244	0697	2	F	Application detection notification method	11.5.0	11.6.0
2012-06	SP-56	SP-120244	0698	1	F	General corrections for SAPP	11.5.0	11.6.0
2012-06	SP-56	SP-120244	0699	2	F	Unsolicited application reporting functionality corrections	11.5.0	11.6.0
2012-06	SP-56	SP-120244	0700	-	F	Deferred ADC rules clarifications	11.5.0	11.6.0
2012-06	SP-56	SP-120250	0701	5	F	Usage monitoring congestion handling clarification	11.5.0	11.6.0
2012-06	SP-56	SP-120241	0702	7	F	Annex P Corrections	11.5.0	11.6.0
2012-06	SP-56	SP-120241	0706	5	F	Clarification of functional description in P.5	11.5.0	11.6.0
2012-06	SP-56	SP-120241	0707	2	F	Addition for the P.6 Functional Entities for NSWO	11.5.0	11.6.0
2012-06	SP-56	SP-120329	0709	2	F	Corrections for TS 23.203	11.5.0	11.6.0
2012-06	SP-56	SP-120231	0719	3	A	Clarification of complete PCC/ADC rule in deferred rule procedures	11.5.0	11.6.0
2012-06	SP-56	SP-120241	0720	4	F	V_PCRF Initiated S9a GW Control Session Termination Correction	11.5.0	11.6.0
2012-06	SP-56	SP-120241	0721	4	F	V-PCRF Discovery and Selection by BPCF	11.5.0	11.6.0
2012-06	SP-56	SP-120243	0723	1	F	Removal of CSG ID as a network provided location information parameter	11.5.0	11.6.0
2012-06	SP-56	SP-120241	0725	-	F	Gx enhancement for trusted S2c access	11.5.0	11.6.0
2012-06	SP-56	SP-120241	0730	-	F	Clarification of with BBERF location in Annex P of TS 23.203	11.5.0	11.6.0
2012-06	SP-56	SP-120244	0732	1	F	Correction of redirection functionality	11.5.0	11.6.0
2012-06	SP-56	SP-120238	0733	2	F	Clean-up for spending limit description	11.5.0	11.6.0
2012-06	SP-56	SP-120241	0736	2	F	Corrections for Gateway control session termination over S9a	11.5.0	11.6.0
2012-06	SP-56	SP-120241	0737	2	F	PCEF and Gx interface function correction and complement	11.5.0	11.6.0
2012-06	SP-56	SP-120241	0739	1	F	Clarification and correction on P.3 and P.4	11.5.0	11.6.0
2012-06	SP-56	SP-120241	0744	1	F	Correction to BBERF-initiated GCS procedure	11.5.0	11.6.0
2012-09	SP-57	SP-120478	0750	-	F	TDF address transfer over S9a	11.6.0	11.7.0
2012-09	SP-57	SP-120477	0752	2	F	Additional Input for PCC Rule Authorization	11.6.0	11.7.0
2012-09	SP-57	SP-120479	0753	-	F	Addition of PLMN ID for NETLOC	11.6.0	11.7.0

Change history								
Date	**TSG #**	**TSG Doc.**	**CR**	**Rev**	**Cat**	**Subject/Comment**	**Old**	**New**
2012-09	SP-57	SP-120478	0755	1	F	Transport of ePDG or PGW IP address over S9	11.6.0	11.7.0
2012-09	SP-57	SP-120478	0757	1	F	Correction of PCC procedures	11.6.0	11.7.0
2012-09	SP-57	SP-120478	0760	1	F	Case 1, 2a and 2b clarification	11.6.0	11.7.0
2012-09	SP-57	SP-120478	0762	1	F	Correction on V-PCRF-Initiated IP-CAN Session Modification for NSWO traffic	11.6.0	11.7.0
2012-09	SP-57	SP-120477	0765	2	A	Removal of Maximum MBR/APN-AMBR	11.6.0	11.7.0
2012-12	SP-58	SP-120720	0758	2	F	Correction on ADC functionality description	11.7.0	11.8.0
2012-12	SP-58	SP-120720	0761	2	F	Correction of enforcement order of PCC and ADC rules for PCEF enhanced with ADC	11.7.0	11.8.0
2012-12	SP-58	SP-120720	0766	2	F	Correction of redirection functionality	11.7.0	11.8.0
2012-12	SP-58	SP-120716	0775	2	F	Time Based Sy Controls	11.7.0	11.8.0
2013-03	SP-59	SP-130082	0785	2	F	PCRF initiated GCS termination	11.8.0	11.9.0
2013-03	SP-59	SP-130082	0786	2	F	BPCF initiates Gateway Control and QoS Rule request procedure for HNB CS traffic	11.8.0	11.9.0
2013-03	SP-59	SP-130086	0790	2	F	TWAN Location Information over Gx	11.8.0	11.9.0
2013-03	SP-59	SP-130083	0791	2	F	User Location Information Age	11.8.0	11.9.0
2013-03	SP-59	SP-130082	0792	-	F	Alignment of BBAI H(e)NB Local IP Address Signalling with RAN WG3 decisions	11.8.0	11.9.0
2013-06	SP-60	SP-130223	0783	3	F	S9 optional at local breakout	11.9.0	11.10.0
2013-06	SP-60	SP-130323	0803	3	F	Correction of PCC based location reporting procedures	11.9.0	11.10.0
2013-06	SP-60	SP-130223	0805	1	F	Corrections in sections describing the bearer binding and event triggering for GTP based EPC	11.9.0	11.10.0
2013-06	SP-60	SP-130318	0809	3	F	Functionality of application detection and control in case of PCEF enhanced with ADC	11.9.0	11.10.0
2013-06	SP-60	SP-130217	0812	-	F	Remove the editor's note of VPLMN-Id provisioning	11.9.0	11.10.0
2013-06	SP-60	SP-130306	0818	2	F	Onetime reporting of the present Access Network Information	11.9.0	11.10.0
2013-09	SP-61	SP-130373	0834	1	F	Some corrections to SAPP	11.10.0	11.11.0
2013-09	SP-61	SP-130369	0838	1	A	Clarifications for CSG information transfer	11.10.0	11.11.0
2013-12	SP-62	SP-130524	0824	6	F	PCC support for unidirectional downlink flows in NW-initiated procedures	11.11.0	11.12.0
2013-12	SP-62	SP-130524	0845	3	F	Correction of PCRF discovery and selection in the presence of NAT devices and overlapping address space	11.11.0	11.12.0