ARIB STD-T63-26.237 V11.3.0

IP Multimedia Subsystem (IMS) based Packet Switch Streaming (PSS) and Multimedia Broadcast/Multicast Service (MBMS) User Service; Protocols

(Release 11)

Refer to “Industrial Property Rights (IPR)” in the preface of ARIB STD-T63 for Related Industrial Property Rights. Refer to “Notice” in the preface of ARIB STD-T63 for Copyrights.

3GPP TS 26.237 V11.3.0 (2013-12)

Technical Specification

3rd Generation Partnership Project;
Technical Specification Group Services and System Aspects;
IP Multimedia Subsystem (IMS) based
Packet Switch Streaming (PSS)
and Multimedia Broadcast/Multicast Service (MBMS)
User Service;
Protocols
(Release 11)

The present document has been developed within the 3rd Generation Partnership Project (3GPP TM) and may be further elaborated for the purposes of 3GPP.

The present document has not been subject to any approval process by the 3GPP Organizational Partners and shall not be implemented.
This Specification is provided for future development work within 3GPP only. The Organizational Partners accept no liability for any use of this Specification.
Specifications and reports for implementation of the 3GPP TM system should be obtained via the 3GPP Organizational Partners' Publications Offices.

Keywords

UMTS, Broadcast, Multimedia, Packet Mode,
IMS, LTE

3GPP

Postal address

3GPP support office address

650 Route des Lucioles - Sophia Antipolis
Valbonne - FRANCE
Tel.: +33 4 92 94 42 00 Fax: +33 4 93 65 47 16

Internet

http://www.3gpp.org

Copyright Notification

No part may be reproduced except as authorized by written permission.
The copyright and the foregoing restriction extend to reproduction in all media.

© 2013, 3GPP Organizational Partners (ARIB, ATIS, CCSA, ETSI, TTA, TTC).
All rights reserved.

UMTS™ is a Trade Mark of ETSI registered for the benefit of its members
3GPP™ is a Trade Mark of ETSI registered for the benefit of its Members and of the 3GPP Organizational Partners
LTE™ is a Trade Mark of ETSI currently being registered for the benefit of its Members and of the 3GPP Organizational Partners
GSM® and the GSM logo are registered and owned by the GSM Association

Contents

Foreword....10
Introduction....10
1 Scope....11
2 References....11
3 Definitions and abbreviations....13
3.1 Definitions....13
3.2 Abbreviations....13
4 System description....14
4.1 Introduction....14
4.2 Architecture....14
4.2.1 Non IMS 3GPP PSS and MBMS User Service architecture....14
4.2.2 IMS based PSS and MBMS User Service architecture....15
4.3 IMS based PSS and MBMS US procedures overview....18
4.4 PSS and MBMS user profile and UE capabilities....20
4.4.1 User profile description....20
4.4.2 UE capabilities....20
4.4.3 Storage location....20
5 Service Provider Discovery....21
5.1 Introduction....21
5.2 DNS....21
5.3 Others....21
6 User Service Discovery....22
6.1 Introduction....22
6.2 Subscribe/Notify....22
6.2.1 General description....22
6.2.2 Procedures at the UE....23
6.2.2.1 Introduction....23
6.2.2.2 Subscription....23
6.2.2.3 Receiving notifications....23
6.2.3 Procedures at the SDF....24
7 User Service Description retrieval....25
7.1 Introduction....25
7.2 User Service Description retrieval for PSS and MBMS....25
7.2.1 Procedures at the UE....25
7.2.1.1 Procedure for Service Personalisation....25
7.2.1.2 Request of OMA BCAST ESG....25
7.2.1.3 Use of Service Description information....25
7.2.2 Procedures at the SSF....25
7.2.2.1 Authentication and authorisation in case of personalized service description information....25
7.2.2.2 Procedure for Service Personalization....26
7.2.2.3 Delivery of OMA BCAST ESG....26
8 Streaming session and media control....26
8.1 General....26
8.2 PSS Streaming....26
8.2.1 PSS Media codecs and formats....26
8.2.2 Procedure for providing missing parameters....27
8.2.2.1 Procedures at the UE....27
8.2.2.2 Procedures at the SCF....27
8.2.2.3 Procedures at the PSS Adapter....27
8.2.3 PSS Streaming Session initiation....28
8.2.3.1 General description....28

8.2.3.2 Procedures at the UE ... 28
8.2.3.3 Procedures at the IM CN Subsystem ... 29
8.2.3.4 Procedures at the SCF ... 30
8.2.3.5 Procedures at the PSS Adapter ... 30
8.2.4 PSS Streaming Playback Control ... 32
8.2.4.1 General Description ... 32
8.2.4.2 Procedures at the UE ... 32
8.2.4.3 Procedures at the PSS Adapter ... 33
8.2.4.4 Procedures at the PSS Server ... 33
8.2.5 PSS content switching ... 33
8.2.5.1 PSS Streaming session modification ... 33
8.2.5.1.1 General description ... 33
8.2.5.1.2 Procedures at the UE ... 34
8.2.5.1.3 Procedures at the IM CN subsystem ... 35
8.2.5.1.4 Procedures at the SCF ... 35
8.2.5.1.5 Procedures at the PSS adapter ... 35
8.2.5.1.6 Procedures at the PSS server ... 35
8.2.5.2 PSS Content switching with available SDP, no change of media component and bandwidth ... 35
8.2.5.2.1 General description ... 35
8.2.5.2.2 Procedures at the UE ... 36
8.2.5.2.3 Procedures at the IM CN Subsystem ... 36
8.2.5.2.4 Procedures at the SCF ... 36
8.2.5.2.5 Procedures at the PSS Adapter ... 37
8.2.5.2.6 Procedures at the PSS Server ... 37
8.2.5.3 PSS Content switching with available SDP, change of media components or QoS ... 37
8.2.5.3.1 General Description ... 37
8.2.5.3.2 Procedures at the UE ... 38
8.2.5.3.3 Procedures at the IM CN Subsystem ... 39
8.2.5.3.4 Procedures at the SCF ... 39
8.2.5.3.5 Procedures at the PSS Adapter ... 39
8.2.5.3.6 Procedures at the PSS Server ... 39
8.2.5.4 PSS Content switching with unavailable SDP, no change of media component and/or bandwidth ... 39
8.2.5.4.1 General description ... 39
8.2.5.4.2 Procedures at the UE ... 40
8.2.5.4.3 Procedures at the IM CN Subsystem ... 40
8.2.5.4.4 Procedures at the SCF ... 40
8.2.5.4.5 Procedures at the PSS Adapter ... 40
8.2.5.4.6 Procedures at the PSS Server ... 41
8.2.5.5 PSS Content switching with unavailable SDP, change of media component and/or bandwidth ... 41
8.2.5.5.1 General description ... 41
8.2.5.5.2 Procedures at the UE ... 42
8.2.5.5.3 Procedures at the IM CN Subsystem ... 42
8.2.5.5.4 Procedures at the SCF ... 42
8.2.5.5.5 Procedures at the PSS Adapter ... 43
8.2.5.5.6 Procedures at the PSS Server ... 43
8.2.5.6 PSS content switching reporting update ... 43
8.2.5.6.1 General Description ... 43
8.2.5.6.2 Procedures at the PSS adapter ... 43
8.2.5.6.3 Procedures at the SCF ... 43
8.2.5.7 PSS Content Report Configuration ... 44
8.2.5.7.1 General Description ... 44
8.2.5.7.2 Procedures in SCF ... 44
8.2.5.7.3 Procedures at the IM CN Subsystem ... 44
8.2.5.7.4 Procedures in PSS Adapter ... 44
8.2.6 PSS Streaming Session Teardown ... 45
8.2.6.0 Introduction ... 45
8.2.6.1 General Description ... 45
8.2.6.1.1 UE-initiated PSS streaming session teardown ... 45
8.2.6.1.2 SCF-initiated PSS streaming session teardown ... 46
8.2.6.1.3 PSS adapter-initiated PSS streaming session teardown ... 46
8.2.6.2 Procedures at the UE ... 47
8.2.6.2.1 UE-initiated PSS streaming session teardown ... 47

8.2.6.2.2 Network-initiated PSS streaming session teardown ... 47
8.2.6.3 Procedures at the IM CN Subsystem ... 47
8.2.6.4 Procedures at the SCF ... 47
8.2.6.4.1 UE-initiated PSS streaming session teardown ... 47
8.2.6.4.2 SCF-initiated PSS streaming session teardown ... 47
8.2.6.4.3 PSS adapter-initiated PSS streaming session teardown ... 47
8.2.6.5 Procedures at the PSS Adapter ... 47
8.2.6.5.1 UE-initiated PSS streaming session teardown ... 47
8.2.6.5.2 SCF-initiated PSS streaming session teardown ... 48
8.2.6.5.3 PSS adapter-initiated PSS streaming session teardown ... 48
8.2.6.6 Procedures at the PSS Server ... 48
8.2.7 Supported procedures ... 48
8.3 MBMS Streaming ... 48
8.3.1 MBMS Media codecs and formats ... 48
8.3.2 Procedure for providing missing parameters ... 48
8.3.2.1 Procedures at the UE ... 48
8.3.2.2 Procedures at the SCF ... 49
8.3.3 MBMS Streaming Session initiation ... 49
8.3.3.1 General description ... 49
8.3.3.2 Procedures at the UE ... 49
8.3.3.3 Procedures at the IM CN Subsystem ... 50
8.3.3.4 Procedures at the SCF ... 50
8.3.3.5 Procedures at the BMSC.UPF ... 51
8.3.4 MBMS content switching ... 51
8.3.4.1 General Description ... 51
8.3.4.2 Procedures at the UE ... 52
8.3.4.2 Procedures at the IM CN Subsystem ... 52
8.3.4.3 Procedures at the SCF ... 52
8.3.4.4 Procedures at the BMSC.UPF ... 52
8.3.5 MBMS Streaming Session Teardown ... 53
8.3.5.1 General Description ... 53
8.3.5.2 Procedures at the UE ... 53
8.3.5.3 Procedures at the IM CN Subsystem ... 53
8.3.5.4 Procedures at the SCF ... 53
8.3.5.5 Procedures at the BMSC.UPF ... 53
8.3.6 MBMS Content Report Configuration ... 53
8.3.6.1 General Description ... 53
8.3.6.2 Procedures in SCF ... 54
8.3.6.3 Procedures at the IM CN Subsystem ... 54
8.3.6.4 Procedures in UE ... 54
8.4 Combined PSS and MBMS Streaming ... 54
8.4.1 Introduction ... 54
8.4.2 PSS - MBMS Switching ... 55
8.4.3 Switching from MBMS streaming to PSS streaming ... 55
8.4.3.1 Combined Session establishment ... 56
8.4.3.1.1 Procedures at the UE ... 56
8.4.3.1.2 Procedures at the IM CN Subsystem ... 56
8.4.3.1.3 Procedures at the SCF ... 57
8.4.3.1.4 Procedures at the PSS Adapter ... 57
8.4.3.1.5 Procedures at the PSS Server ... 57
8.4.3.2 Combined session teardown ... 57
8.4.4 Switching from PSS streaming to MBMS streaming ... 57
8.4.4.1 Combined Session establishment ... 58
8.4.4.1.1 Procedures at the UE ... 58
8.4.4.1.2 Procedures at the IM CN Subsystem ... 58
8.4.4.1.3 Procedures at the SCF ... 58
8.4.4.1.4 Procedures at the PSS Adapter ... 59
8.4.4.1.5 Procedures at the PSS Server ... 59
8.4.4.2 Combined session teardown ... 59

9 Policy and charging control ... 59
9.1 General ... 59

9.2 QoS control ... 59

10 Security Procedures ... 60
10.1 General ... 60
10.2 Secure Service Description Retrieval ... 61
10.3 PSS Authentication and Content encryption ... 62
10.4 MBMS Security procedures ... 62
10.4.1 HTTP based MBMS security procedure ... 62
10.4.1.1 MSK procedures ... 63
10.4.1.1.1 IMS based MBMS user service key registration procedure ... 63
10.4.1.1.2 IMS based MBMS user service key deregistration procedure ... 64
10.4.1.1.3 IMS based MBMS user service MSK request procedure ... 64
10.4.1.1.4 IMS based MBMS user service MSK delivery procedure ... 64
10.4.1.2 MTK procedure ... 64
10.4.2 SIP based MBMS security procedures ... 64
10.4.2.0 General ... 64
10.4.2.1 SIP based MBMS User Service Registration ... 65
10.4.2.1a SIP based MBMS User Service De-registration ... 67
10.4.2.2 SIP based Basic MSK Request ... 69
10.4.2.3 Updating MUK ... 71
10.4.2.4 SIP based BM-SC solicited pull ... 71

11 Blending of Presence and PSS/MBMS user services ... 71
11.1 General description ... 71
11.2 Procedures at the UE acting as presentity ... 72
11.3 Procedures at the UE acting as watcher ... 72

12 Networked Bookmark Service ... 72
12.1 Bookmarking Creation and Storage ... 73
12.2 Bookmarking Retrieval ... 74
12.2.1 Bookmarking Retrieval independent to session establishment ... 74
12.2.2 Bookmarking Retrieval during session establishment ... 74

13 User generated content service ... 75
13.1 UGC content provision procedure ... 76
13.2 UGC distribution procedure ... 77

14 MBMS Download Service ... 77
14.1 Missing parameters before session initiation ... 77
14.1.1 Procedures at the UE ... 77
14.1.2 Procedures at the SCF ... 78
14.2 MBMS Download Session Initiation, File Repair and Reception Report ... 78
14.2.1 General description ... 78
14.2.2 Procedures at the UE ... 79
14.2.3 Procedures at the IM CN Subsystem ... 79
14.2.4 Procedures at the SCF ... 79
14.2.5 Procedures at the BMSC.UPF ... 80
14.3 MBMS Download Session Teardown ... 80
14.3.1 General Description ... 80
14.3.2 Procedures at the UE ... 80
14.3.3 Procedures at the IM CN Subsystem ... 81
14.3.4 Procedures at the SCF ... 81
14.3.5 Procedures at the BMSC.UPF ... 81

15 PSS download service ... 81
15.1 General Description ... 81
15.2 Procedures at the UE ... 82
15.3 Procedures at the IM CN subsystem ... 83
15.4 Procedures at the SCF ... 83
15.5 Procedures at the HTTP/SIP adapter ... 83
15.6 Procedures at the HTTP server ... 84
15.7 Session termination ... 85
15.7.1 General description ... 85
15.7.1.1 UE-initiated PSS download session teardown ... 85

15.7.1.2 SCF-initiated PSS download session teardown ... 86
15.7.1.3 HTTP/SIP adapter-initiated PSS download session teardown ... 87
15.7.2 Procedures at the UE ... 87
15.7.2.1 UE-initiated PSS download session teardown ... 87
15.7.2.2 Network-initiated PSS download session teardown ... 87
15.7.3 Procedures at the IM CN Subsystem ... 87
15.7.4 Procedures at the SCF ... 88
15.7.4.1 UE-initiated PSS download session teardown ... 88
15.7.4.2 SCF-initiated PSS download session teardown ... 88
15.7.4.3 HTTP/SIP adapter-initiated PSS download session teardown ... 88
15.7.5 Procedures at the HTTP/SIP adapter ... 88
15.7.5.1 UE-initiated PSS download session teardown ... 88
15.7.5.2 SCF-initiated PSS download session teardown ... 88
15.7.5.3 HTTP/SIP adapter-initiated PSS download session teardown ... 88
15.7.6 Procedures at the HTTP server ... 88

16 Inter UE Session Transfer ... 88
16.0 Introduction ... 88
16.1 Push mode ... 89
16.2 Pull mode ... 90

17 Parental Control Service ... 92
17.1 Preventive Parental Control ... 92
17.1.1 Parental Control during PSS Session initialization ... 92
17.1.1.1 Procedure at UE ... 92
17.1.1.2 Procedure at SCF ... 93
17.1.1.3 Procedure at PSS Adapter ... 93
17.1.2 Parental Control during MBMS Session initialization ... 93
17.1.2.1 Procedure at UE ... 93
17.1.2.2 Procedure at SCF ... 93
17.2 Interactive Parental Control service ... 93
17.2.1 Blocking ... 93
17.2.1.1 General Description ... 93
17.2.1.2 Procedure at Parent UE ... 94
17.2.1.3 Procedure at SCF ... 94
17.2.2 Allowing ... 95
17.2.2.1 Allowing in PSS Session Initialization ... 95
17.2.2.1.1 General Description ... 95
17.2.2.1.2 Procedure at Child UE ... 96
17.2.2.1.3 Procedure at Parent UE ... 96
17.2.2.1.4 Procedure at SCF ... 96
17.2.2.2 Allowing in MBMS Session Initialization ... 97
17.2.2.2.1 General Description ... 97
17.2.2.2.2 Procedure at Child UE ... 97
17.2.2.2.3 Procedure at Parent UE ... 98
17.2.2.2.4 Procedure at SCF ... 98

18 Forced Playout Constraints ... 99
18.1 General Description ... 99
18.2 Procedures at the UE ... 99
18.3 Procedures at the IM CN Subsystem ... 99
18.4 Procedures at the SCF ... 100
18.5 Procedures at the PSS Adapter ... 100

19 3GP-DASH (Dynamic and Adaptive Streaming over HTTP) service ... 101
19.1 Session initiation and QoS reservation ... 101
19.1.1 General description ... 101
19.1.2 Procedures at the UE ... 101
19.1.3 Procedures at the IM CN subsystem ... 102
19.1.4 Procedures at the SCF ... 103
19.1.5 Procedures at the HTTP/SIP adapter ... 103
19.1.6 Procedures at the HTTP server ... 104
19.2 MPD Update ... 104

19.2.1 General description 104
19.2.2 Procedures at the UE 105
19.2.3 Procedures at the IM CN subsystem 105
19.2.4 Procedures at the SCF 106
19.2.5 Procedures at the HTTP/SIP adapter 106
19.2.6 Procedures at the HTTP server 106
19.3 Session termination 107
19.3.1 General description 107
19.3.1.1 UE-initiated session termination 107
19.3.1.2 SCF-initiated session termination 108
19.3.1.3 HTTP/SIP adapter-initiated session termination 109
19.3.2 Procedures at the UE 109
19.3.2.1 UE-initiated session termination 109
19.3.2.2 Network-initiated session termination 109
19.3.3 Procedures at the IM CN Subsystem 109
19.3.4 Procedures at the SCF 110
19.3.4.1 UE-initiated session termination 110
19.3.4.2 SCF-initiated session termination 110
19.3.4.3 HTTP/SIP adapter-initiated session termination 110
19.3.5 Procedures at the HTTP/SIP adapter 110
19.3.5.1 UE-initiated session termination 110
19.3.5.2 SCF-initiated session termination 110
19.3.5.3 HTTP/SIP adapter-initiated session termination 110
19.3.6 Procedures at the HTTP server 110

20 Network PVR 110
20.1 NPVR Recording procedure 110
20.1.1 General Description 110
20.1.2 Procedures at UE 112
20.1.3 Procedures at SCF 112
20.1.4 Procedures at PSS Adapter 113
20.1.5 Procedures at Recording server 114
20.2 NPVR Retrieving 115
20.2.1 Procedures at UE 115
20.2.2 Procedures at SCF 115
20.2.3 Procedures at PSS Adapter 115
20.2.4 Procedures at PSS server 115

21 Content Referral Service (CRS) 115
21.1 User Initiated CRS 115
21.1.1 General Description 115
21.1.2 Procedure at Initiated UE 116
21.1.3 Procedure at SCF 117
21.1.4 Procedure at Target UE 117
21.2 Service Provider Initiated CRS 118
21.2.1 General Description 118
21.2.2 Procedure at Initiated UE 118
21.2.3 Procedure at SCF 118

Annex A (normative): 3gpp_rtsp application 120

Annex B (informative): Examples 121

Annex C (normative): Void 122

Annex D (normative): XML Schema for PSS and MBMS commands 123

Annex E (normative): XML Schemas for the PSS content switch data 124

Annex F (normative): XML Schemas for the MBMS content switch data 125

Annex G (normative): XML Schema for PSS and MBMS UE Device Capabilities 126

Annex H (normative): XML Schema for Service Attachment Information 127

Annex I (normative): XML Schemas for SIP based MBMS security procedures 130

I.1 Bootstrapping transaction identifier 130

I.2 NAF key information 130

Annex J (normative): XML Schema for nBookmark 131

J.1 XML Schema 131

J.2 Syntax 132

Annex K (normative): XML Schema for Content Report Configuration 133

Annex L (normative): XML Schema for Parental Control Service 134

Annex M (normative): PSS&MBMS User Profile Extension 135

Annex N (normative): XML Schema for Network PVR 136

Annex O (normative): XML Schema for Service Provider Initiated Content Referral Service (CRS) 138

Annex P (informative): File Naming convention for XML schemas 139

Annex Q (normative): Content Reporting Configuration Info Package 140

Q.1 Overall Description 140

Q.2 Applicability 140

Q.3 Info Package Name 140

Q.4 Info Package Parameters 140

Q.5 SIP Option Tags 140

Q.6 INFO Message Body Parts 140

Q.6.1 General 140

Q.6.2 SIP Content-Type header field value 141

Q.6.3 SIP Content-Disposition header field value 141

Q.6.4 Message body syntax 141

Q.7 Info Package Usage Restrictions 141

Q.8 Rate of INFO Requests 141

Q.9 Info Package Security Considerations 141

Q.10 Implementation Details and Examples 141

Annex R (informative): Change history 142

Foreword

This Technical Specification has been produced by the 3rd Generation Partnership Project (3GPP).

The contents of the present document are subject to continuing work within the TSG and may change following formal TSG approval. Should the TSG modify the contents of the present document, it will be re-released by the TSG with an identifying change of release date and an increase in version number as follows:

Version x.y.z

where:

x the first digit:

1 presented to TSG for information;

2 presented to TSG for approval;

3 or greater indicates TSG approved document under change control.

y the second digit is incremented for all changes of substance, i.e. technical enhancements, corrections, updates, etc.

z the third digit is incremented when editorial only changes have been incorporated in the document.

Introduction

The 3GPP Packet Switch Streaming (PSS) provides a framework for Internet Protocol (IP) based streaming applications in by specifying protocols and codecs within the 3GPP system. Protocols for control signalling, capability exchange, media transport, rate adaptation and protection are specified. Codecs for speech, natural and synthetic audio, video, still images, bitmap graphics, vector graphics, timed text and text are specified.

The 3GPP Multimedia Broadcast and Multicast Service (MBMS) provides a framework for broadcast and Multicast streaming and download applications in 3GPP networks supporting the MBMS bearer service. The MBMS user services are enabled by a set of specified media codecs, formats and transport/application protocols. MBMS user services are built on top of the MBMS bearer service. There are two delivery methods for the MBMS user services: download and streaming.

The 3GPP IP Multimedia Subsystem (IMS) enables the deployment of IP multimedia applications. PSS and MBMS User Services are IP multimedia services but they were specified before IMS. IMS brings enablers and features to operators and subscribers that can enhance the experience of PSS and MBMS User Services.

The purpose of the present document is the specification of use of the IMS to initiate and control PSS and MBMS User Service. This should enable deployment of PSS and MBMS user services as IMS services. Note that the present specification uses components of the 3GPP PSS, 3GPP MBMS , ETSI TISPAN IPTV and Open IPTV Forum standards specifications.

1 Scope

The present document specifies the usage of IMS protocols to initiate and control PSS and MBMS Streaming and Download User Services based applications. It applies to IMS enabled UEs that also implement PSS and/or MBMS clients. Existing protocols that are used are described in reference to relevant specifications.

The present document is applicable to IP-based packet-switched networks over 3GPP systems.

The present document includes information applicable to network operators, service providers and manufacturers.

2 References

The following documents contain provisions which, through reference in this text, constitute provisions of the present document.

- References are either specific (identified by date of publication, edition number, version number, etc.) or non-specific.
- For a specific reference, subsequent revisions do not apply.
- For a non-specific reference, the latest version applies. In the case of a reference to a 3GPP document (including a GSM document), a non-specific reference implicitly refers to the latest version of that document *in the same Release as the present document*.

[1] 3GPP TR 21.905: "Vocabulary for 3GPP Specifications".

[2] 3GPP TS 22.146: "Multimedia Broadcast/Multicast Service; Stage 1".

[3] 3GPP TS 22.246: "Multimedia Broadcast/Multicast Service (MBMS) user services; Stage 1".

[4] 3GPP TS 23.246: "Multimedia Broadcast/Multicast Service (MBMS); Architecture and functional description".

[5] 3GPP TS 33.246: "3G Security; Security of Multimedia Broadcast/Multicast Service (MBMS)".

[6] 3GPP TS 23.228: "IP multimedia subsystem; Stage 2".

[7] 3GPP TS 24.229: "IP multimedia call control protocol based on Session Initiation Protocol (SIP) and Session Description Protocol (SDP); Stage 3".

[8] 3GPP TS 26.234: "Transparent end-to-end streaming service; Protocols and codecs".

[9] 3GPP TS 22.233: "Transparent End-to-End Packet-switched Streaming Service; Stage 1".

[10] 3GPP TS 26.233: "Transparent end-to-end packet switched streaming service (PSS); General description".

[11] 3GPP TS 26.346: "Multimedia Broadcast/Multicast Service (MBMS); Protocols and codecs".

[12] 3GPP TS 23.203: "Policy and charging control architecture".

[13] IETF RFC 4145 (September 2005): "TCP-Based Media Transport in the Session Description Protocol (SDP)".

[14] IETF RFC 4572 (July 2006) Connection-Oriented Media Transport over the Transport Layer Security (TLS) Protocol in the Session Description Protocol (SDP)

[15] void

[16] 3GPP TS 23.060: "General Packet Radio Service (GPRS); Service description; Stage 2".

[17] IETF RFC 2782: "A DNS RR for specifying the location of services (DNS SRV)".

[18] Void.

[19] Void.

[20] 3GPP TS 33.222: "Generic Authentication Architecture (GAA); Access to network application functions using Hypertext Transfer Protocol over Transport Layer Security (HTTPS)".

[21] 3GPP TS 24.423: "TISPAN; PSTN/ISDN simulation services; Extensible Markup Language (XML) Configuration Access Protocol (XCAP) over the Ut interface for Manipulating NGN PSTN/ISDN Simulation Services".

[22] 3GPP TS 24.109: "Bootstrapping interface (Ub) and network application function interface (Ua); Protocol details".

[23] Void.

[24] ETSI TS 183 063 V3.5.2 (2011-03): "Telecommunications and Internet converged Services and Protocols for Advanced Networking (TISPAN); IMS based IPTV Stage 3 Specification".

[25] IETF RFC 2326: "Real Time Streaming Protocol (RTSP)".

[26] 3GPP TS 33.220: "Generic Authentication Architecture (GAA); Generic bootstrapping architecture".

[27] OMA-TS-BCAST_Service_Guide-V1_0: "Method and Apparatus for Broadcast Signaling in a Wireless Communication System".

[28] IETF RFC 6080: "A Framework for Session Initiation Protocol User Agent Profile Delivery".

[29] 3GPP TS 23.003: "Numbering, addressing and identification".

[30] 3GPP TS 23.401: "General Packet Radio Service (GPRS) enhancements for Evolved Universal Terrestrial Radio Access Network (E-UTRAN) access”.

[31] 3GPP TS 33.203: "3G security; Access security for IP-based services".

[32] 3GPP TS 33.210: "3G security; Network Domain Security (NDS); IP network layer security".

[33] 3GPP TS 29.109: "Generic Authentication Architecture (GAA); Zh and Zn Interfaces based on the Diameter protocol; Stage 3".

[34] IETF RFC 2616: "Hypertext Transfer Protocol -- HTTP/1.1".

[35] 3GPP TS 23.141: "Presence Service; Architecture and functional description".

[36] 3GPP TS 24.141: "Presence Service using the IP Multimedia (IM) Core network (CN) subsystem".

[37] OMA-TS-Presence-SIMPLE-V1-00-20060725-A: “Open Mobile Alliance: Presence SIMPLE specification".

[38] 3GPP TS 26.114: “IP Multimedia Subsystem (IMS); Multimedia telephony; Media handling and interaction“.

[39] 3GPP TS 26.244:”Transparent end-to-end packet switched streaming service (PSS); 3GPP file format (3GP)”.

[40] 3GPP TS 23.237: “IP Multimedia Subsystem (IMS) Service Continuity; Stage 2“.

[41] 3GPP TS 24.237: “IP Multimedia Subsystem (IMS) Service Continuity; Stage 3“.

[42] IETF RFC 6086: “Session Initiation Protocol (SIP) INFO Method and Package Framework”.

[43] IETF RFC 3515: “The Session Initiation Protocol (SIP) Refer Method”.

[44] Open IPTV Forum, “Release 2 Specification, Volume 4 - Protocols” V2.1, June 2011.

3 Definitions and abbreviations

3.1 Definitions

For the purposes of the present document, the terms and definitions given in 3GPP TR 21.905 [1] and the following apply:

On Demand: users can select their required content, for example with the assistance of the Electronic Programme Guide (EPG), at the user preferred time.

NOTE: The content is then transmitted uniquely (unicast) to that consumer who can usually use trick-modes functionalities to control their viewing of the content. e.g. TV Content on Demand (CoD)

IMS registration: registration procedure for a public user identity initiated by the UE in the absence of any valid registration

Live: content is streamed and intended for reception by anyone where the consumer has no control over the content or timing of what he receives, apart from the ability to select a particular channel. e.g. linear TV.

"Non-IMS" BM-SC: BM-SC function as defined in 3GPP TS 23.246 [5] and 3GPP TS 26.346 [11] without any IMS support

Multimedia Broadcast/Multicast Service (MBMS): See 3GPP TS 22.146 [2].

MBMS User Services: MBMS User Service may use more than one Multimedia Broadcast/Multicast Service (bearer service) and more than one Broadcast and/or Multicast session
(See 3GPP TS 22.246 [3].)

MBMS user service discovery/announcement: user service discovery refers to methods for the UE to obtain the list of available MBMS user services along with information on the user service and the user service announcement refers to methods for the MBMS service provider to make the list of available MBMS user services along with information on the user service available to the UE

MBMS delivery method: mechanism used by a MBMS user service to deliver content
An MBMS delivery method uses MBMS bearers in delivering content and may make use of associated procedures.

MBMS download delivery method: delivery of discrete objects (e.g. files) by means of a MBMS download session

MBMS streaming delivery method: delivery of continuous media (e.g. real-time video) by means of a MBMS streaming session

MBMS streaming session: time, protocols and protocol state (i.e. parameters) which define sender and receiver configuration for the streaming of content

PSS client: client for the 3GPP packet switched streaming service based on the IETF RTSP/SDP and/or HTTP standards, with possible additional 3GPP requirements according to the present document

PSS server: server for the 3GPP packet switched streaming service based on the IETF RTSP/SDP and/or HTTP standards, with possible additional 3GPP requirements according to the present document

Trick Play: streaming playback mode during which the user can control playback by playing, seeking, pausing, fast forwarding and fast rewinding

3.2 Abbreviations

For the purposes of the present document, the abbreviations given in 3GPP TR 21.905 [1] and the following apply:

BM-SC	Broadcast-Multicast - Service Centre
CoD	Content on Demand
ESG	Electronic Service Guide
GGSN	Gateway GPRS Serving Node
IMPI	IMS Private Identity

IMPU	IMS Public Identity
IMS	IP Multimedia Subsystem
IUT	Inter UE Session Transfer
IP	Internet Protocol
MBMS	Multimedia Broadcast/Multicast Service
PSS	Packet Switch Streaming
PSI	Public Service Identity
RTP	Real-Time transport Protocol
RTSP	Real-Time Streaming Protocol
SCC	Service Centralization and Continuity
SCF	Service Control Function
SDF	Service Discovery Function
SDP	Session Description Protocol
SSF	Service Selection Function
UE	User Equipment
URI	Uniform Resource Identifier
USD	User Service Description

4 System description

4.1 Introduction

This clause describes the IMS initiated and controlled PSS and MBMS User Service system. It gives a description of the architecture, the role of each new and modified entity and interface.

The description of the PSS system is in 3GPP TS 22.233 [9] and 3GPP TS 26.233 [10]. The description of the MBMS system is in 3GPP TS 23.246 [4].

4.2 Architecture

4.2.1 Non IMS 3GPP PSS and MBMS User Service architecture

Figure 1 describes the Non IMS PSS and MBMS User Service architecture.

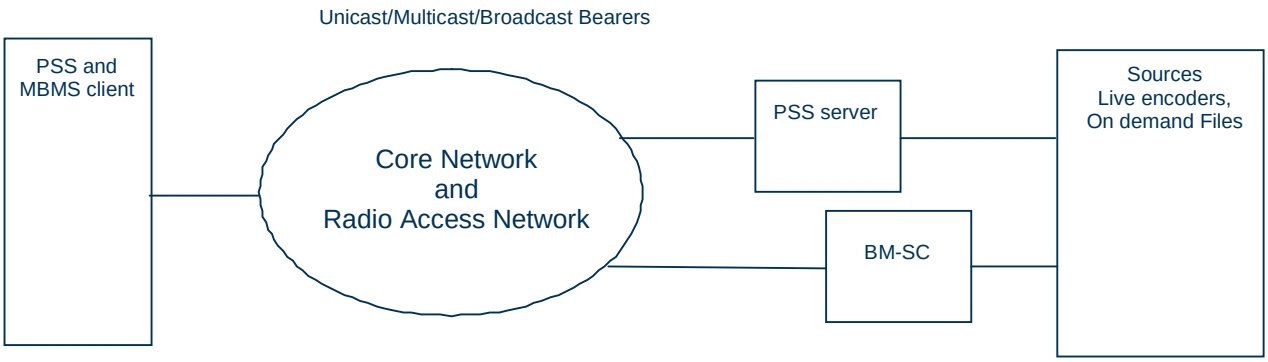

Figure 1: Non IMS PSS and MBMS User Service Architecture

The sources consist of all multimedia content in streaming or file form. E.g. live encoders processing in feeds from TV or Music Radio channels.

The PSS server performs control and streaming delivery functions on a Unicast access type.

The BM-SC performs control and streaming/download delivery functions in a hybrid Unicast/Multicast/Broadcast access type.

The core network and RAN enable the mobility, and provides IP connectivity over Unicast/Multicast/Broadcast bearers between the servers and the clients.

The PSS & MBMS client, located in the UE, performs service selection and initiation, receives and present the content to the user.

The PSS client interfaces to the PSS server transparently through the Packet Switch Network. The PSS client can discover the PSS services via multiple means like e.g. browsing. The session description protocol is SDP. The session control protocol is RTSP. The transport protocol is RTP.

The MBMS client interfaces to the BM-SC via layer 3 protocols defined between the UE and the GGSN and the GGSN with the BM-SC (Gmb).

The PSS and MBMS client interfaces via the Radio interface to the RAN and the CN.

The interface between the sources and the PSS server & BM-SC are outside the scope of the present document.

4.2.2 IMS based PSS and MBMS User Service architecture

Figure 2 describes the IMS based PSS and MBMS User Service functional architecture. In addition to PSS and MBMS User Service functions, the IMS core and various functions are added.

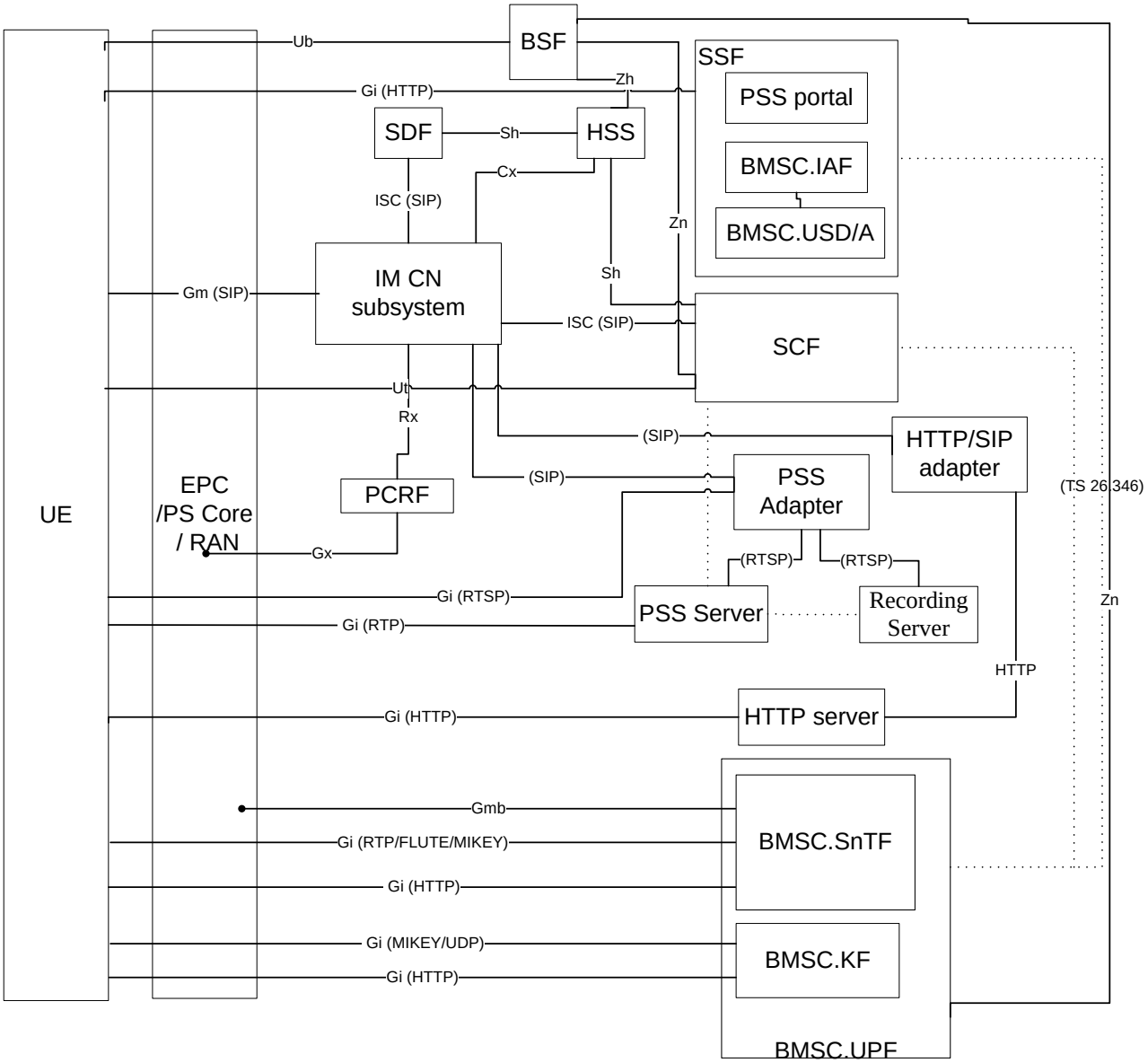

Figure 2: IMS based PSS and MBMS functional architecture

In figure 2:

- Solid lines are standard interfaces. E.g. interface between PSS server and UE4.
- Dotted lines are for interfaces for which the protocols in use is out of the scope of the present document. E.g. interface between SSF and BMSC.UPF.

Description of functional entities:

- IM CN Subsystem: IMS Core Network Subsystem as defined in 3GPP TS 23.228 [6].The IM CN Subsystem supports, user registration and authentication, mobility and roaming, control of multimedia sessions, QoS control, Policy control, charging and interworking with circuit switched.
- EPC/PS Core/RAN: Evolved Packet Core, Packet Switch Core Network and Radio Access Network. See 3GPP TS 23.060 [16] and TS 23.401 [30].

NOTE 0: the various packet core networks may offer different levels of support (e.g. the EPC does not support MBMS in 3GPP Release 8).

- UE: The UE contains an GBA/IMS/PSS/MBMS client, which performs service discovery and selection, handles service initiation, modification and termination, receives and present the content to the user. In addition to the procedures specified in this document, the UE shall support the procedures specified in 3GPP TS 24.229 [7] and 3GPP TS 24.109 [22] for the UE functional entity.
- SDF: Service Discovery Function (SDF): this function provides an entry point to SSF for the client to attach to the service provided by the service provider. In addition to the procedures specified in this document, the SDF shall support the procedures specified in 3GPP TS 24.229 [7] for the terminating UA functional entity.
- SSF: Service Selection Function (SSF): this function provides a list of available PSS and MBMS User Services and relevant User Service Description information. It can be personalized to the client's identity. The SSF shall support Service Announcement functions according to the Xa interface in TISPAN. The PSS portal is for formatting and delivery of PSS Service Description information. The BMSC.IAF and BMSC.USD/A functions are according to 3GPP TS 26.346 [11]. The interface between BMSC.IAF and UE is according to 3GPP TS 26.346 [11] and out of the scope of the present specification. If the User Service Description information exists in a BMSC.USD/A of a "Non-IMS" BM-SC, or in a PSS portal, the SSF takes USD information from them. The SSF may then reformat the USD information before delivery to the UE. The reformat may include information for the IMS UE to build a SIP URI to initiate PSS and MBMS user service.
- SCF: Service Control Function (SCF): it provides service logic and functions required to support execution of such logic. It does service authorization during session initiation and session modification, which includes checking PSS and MBMS user's service subscription in order to allow or deny access to the service. It selects the relevant PSS and MBMS media functions. In addition to the procedures specified in this document, the SCF shall support the procedures specified in 3GPP TS 24.229 [7]:
    - For PSS, the SCF acts as a proxy or B2BUA.
    - For MBMS, the SCF acts as a terminating UA.
- BSF: Bootstrapping Server Function (BSF) as defined in 3GPP TS 33.220 [26] and 3GPP TS 24.109 [22] to perform GBA/GAA procedures with the UE. The BSF supports procedures defined in 3GPP TS 33.220 [26] and 3GPP TS 29.109 [x] with the HSS and the BMSC.UPF (see clause 10.4.1) and with the HSS and the SCF (see clause 10.4.2) to enable GBA/GAA procedures.
- HSS: Home Subscriber Server as defined in 3GPP TS 23.002. Contains the IMS User Profile and optionally the GBA User Security Settings (GUSS) defined in 3GPP TS 33.220 [26] and 3GPP TS 29.109 [33]. It also may contain PSS and MBMS User Service specific User and UE data.
- PSS Adapter: this function performs bi-directional protocol translation between SIP and RTSP to offer control of PSS servers as defined in clause 8.2.3.5 and also control of Recording servers as defined in clause 20.1.4. It proxies RTSP messaging from the UE and SIP/RTSP translation towards the PSS server and Recording server. Note that these functions can be incorporated into the SCF, the PSS Server or a new stand-alone entity. In addition to the procedures specified in this document, the PSS Adapter shall support the procedures specified in 3GPP TS 24.229 [7] for the terminating UA functional entity.

- HTTP/SIP adapter: this function correlates SIP session with HTTP incoming requests. In addition to the procedures specified in this document, the HTTP/SIP adapter shall support the procedures specified in 3GPP TS 24.229 [7] for the terminating UA functional entity.
- PCRF: Policy and Charging Rules Function (3GPP TS 23.203 [12]). This function controls the charging and the establishment of resources in the RAN and PS core network.
- PSS Server: Packet Switch Streaming server function as described in 3GPP TS 26.234 [8]. It functionally contains media control and media delivery functions.
- Recording Server: Recording Server function performs live content recording. This function contains two part, to the content resource, it retrieves live streaming content; to PSS Adapter, it act as a RTSP client as defined in section X.1.5.
- HTTP server: this function is described in 3GPP TS 26.234 [8].
- BMSC.UPF: it contains all BMSC User Plane sub-functions.

NOTE 1: The BM-SC Membership function and Proxy and Transport function are defined in 3GPP TS 23.246 [4]. These functions are not described on the architecture in figure 2. The BM-SC Membership function is invoked for the establishment and release of Multicast bearers.

Description of interfaces:

The interface between the UE and the SSF is used to retrieve service selection information. It is part of the SGi/Gi interface and based on HTTP protocol.

Gm: This is a SIP based interface between the UE (IMS Client) and the P-CSCF. It is used to forward the SIP service request and response between UE and network.

The interface between the UE (PSS Client) and the PSS Adapter allows media flow control. It is part of the SGi/Gi interface and based on RTSP protocol.

The interface between the PSS Server and the UE is for delivery of streaming data. It is part of the SGi/Gi interface and based on RTP and RTCP protocols.

The interface between the HTTP server and the UE is for delivery of download data. It is part of Sgi/Gi interface and based on HTTP.

The interface between the BMSC.UPF and the UE is for delivery of streaming data and traffic keys. It is part of the SGi/Gi interface and based on (S)RTP, FLUTE and MIKEY protocols.

Gmb: This interface is between the BMSC.UPF and the GGSN. The Gmb interface is defined in 3GPP TS 23.246 [4].

The interface between the PSS Adapter and the PSS Server allows control of the PSS Server. This interface is based on RTSP protocol.

NOTE 2: This interface needs to be named.

The interface between the PSS Adapter and the Recording Server allows control of the Recording Server. This interface is based on RTSP protocol.

The interface between the PSS Server and the Recording Server is for delivery of recorded streaming content.

The interface between the HTTP/SIP adapter and the HTTP server is based on HTTP.

The interface between the IM CN subsystem and the SCF is an ISC (IMS Service Control) interface based on SIP. The interface between the IM CN subsystem and the PSS adapter is an interface based on SIP protocol.. Both interfaces are used to setup, modify and teardown PSS sessions.

NOTE 3: Under certain conditions this interface between the SCF and the PSS adapter can be implemented as a direct interface (i.e. not going via the IM CN subsystem).

NOTE 4: The interface between the IM CN subsystem and the PSS adapter needs to be named.

The interface between the IM CN subsystem and the SCF is an ISC (IMS Service Control) interface based on SIP. The interfaces between the IM CN subsystem and the HTTP/SIP adapter is an interface based on SIP.

NOTE 5: Under certain conditions this interface between the SCF and the PSS adapter can be implemented as a direct interface (i.e. not going via the IM CN subsystem).

This interface between the SSF and the BMSC.UPF is according to 3GPP TS 26.346 [11]. It may be used to carry USD over MBMS bearers.

The interface between the SDF and the IM CN subsystem is an ISC (IMS Service Control) interface based on SIP protocol.

The interface between the UE and SCF is used for PSS and MBMS User Service and User Profile configuration. It is equivalent to the Ut interface in TISPAN IPTV.

The interface between the SCF and the BMSC.UPF is used for security related functions (see clauses 10.4.1 and 10.4.2, respectively).

The interface between the SCF and the PSS Server is FFS.

The interface between the UE to the BMSC.SnTF is used for MBMS Associated Delivery procedures as defined in 3GPP TS 26.346 [11]. It is part of the SGi/Gi interface.

The interface between the UE and the BMSC.KF is used for delivery of the MSK as defined in 3GPP TS 33.246 [5]. It is part of the SGi/Gi interface and based on MIKEY/UDP protocols.

The interface between the UE and the BMSC.KF may be used for Key Request Functions (see clause 10.4.1).

The interface between the BSF and the UE is part of the Ub interface defined in 3GPP TS 33.220 [26] and 3GPP TS 24.109 [22] and used for security functionalities.

The interface between the BSF and the HSS is part of the Zh interface to fetch the Authentication Vectors (AV) and optionally the GBA User Security Settings (GUSS) and defined in 3GPP TS 33.220 [26] and 3GPP TS 29.109 [33].

The interface between the BSF and the BMSC.UPF (see clause 10.4.1) and between the BSF and the SCF (see clause 10.4.2) is part of the Zn interface to deliver the application security information and defined in 3GPP TS 29.109 [33] and 3GPP TS 33.220 [26].

4.3 IMS based PSS and MBMS US procedures overview

Figure 3 describes the IMS based PSS and MBMS procedures from connection establishment to User Service Description retrieval.

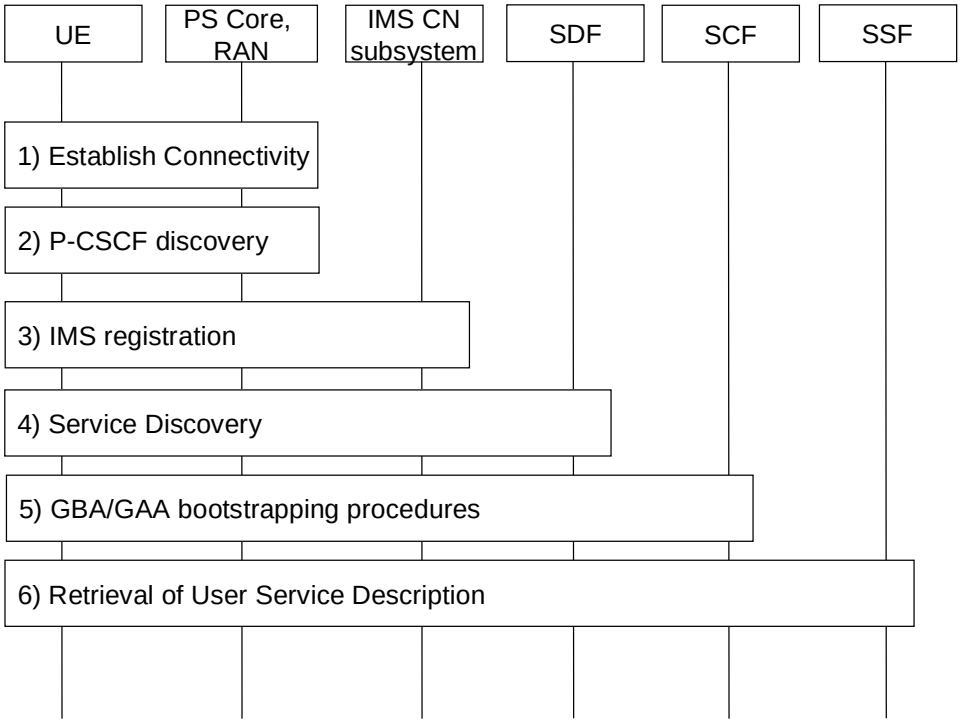

Figure 3: Procedures overview - part 1

Step 1 to 3: are outside the scope of the present document.

Step 4: Service discovery, allows the Client to be informed of the available Service Providers.

Step 5: GBA/GAA bootstrapping procedures, authenticates the User for signalling outside IMS and generates the Long Term Key that will be used during content key management procedures.

Step 6: Retrieval of User Service description, allows the client to obtain the service session information for the selected provider.

Figure 4 describes the IMS based PSS and MBMS procedures from session establishment to content key management.

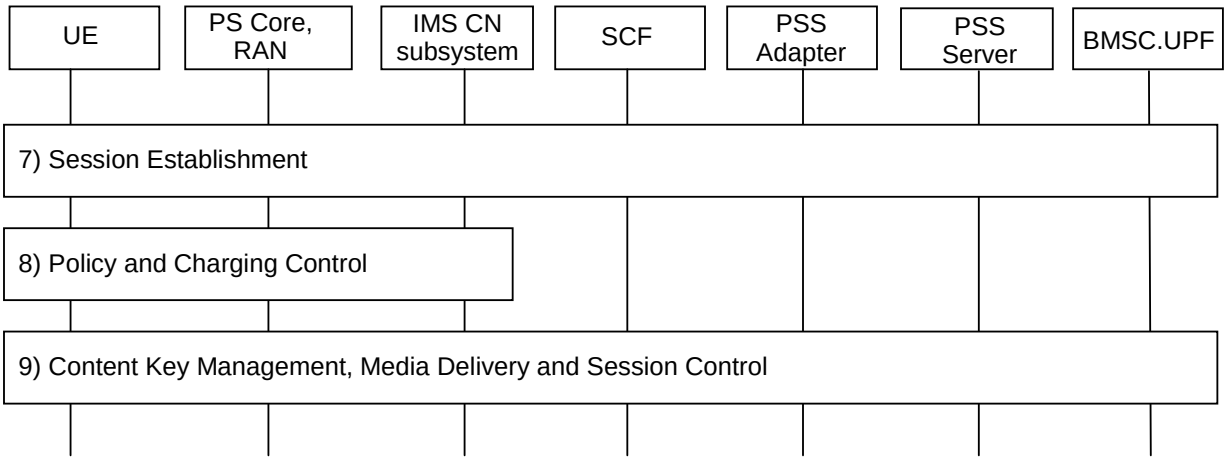

Figure 4: Procedures overview - part 2

Step 7: Session Establishment, allows the Client to initiate a PSS or MBMS User Service session to receive content.

Step 8: Policy and Charging Control, are procedures performed via the IMS core to setup relevant bearer QoS and charging functions.

Step 9: Content Key Management is necessary to generate and distribute the keys to allow secure delivery of content to the User. At this stage, the delivery session is established and content is delivered to the client.

4.4 PSS and MBMS user profile and UE capabilities

4.4.1 User profile description

The PSS and MBMS user profile data contains all information required to operate PSS and MBMS user services.

The part of the PSS & MBMS user profile used for On Demand (CoD in TISPAN) and Live (BC in TISPAN) services shall be as defined in TISPAN TS 183 063, Annex C.

The part of the PSS & MBMS user profile used for Parental Control Service shall be as defined in Annex M.

4.4.2 UE capabilities

A set of PSS and MBMS UE capabilities is required to personalize and operate PSS and MBMS user services. These capabilities are described in 2 documents:

- The PSS and MBMS UE Capabilities XML document defined in Annex G.
- The RDF/XML document for the PSS base vocabulary specified in Annex F of TS 26.234 [8].

These 2 documents are sent during the Service Discovery procedure. See clause 6.

4.4.3 Storage location

PSS and MBMS user profile and UE capabilities information may be stored in the following locations:

- Application Server functions.
- In a stand-alone server associated with one or more Application Server functions.
- In the HSS as transparent data associated to these Application Server functions.

The first and second options are recommended for data to be accessed by 3rd party application server functions. In the first and second case the Application Server function or the stand-alone server may exhibit the behaviour of an XDMS.

User data stored in the HSS can be accessed by Application Servers at the Sh reference point.

A subset of PSS and MBMS user-profile information may be accessed from the User Equipment at the Ut reference point.

For the purpose of personalized service selection, the SSF may need to access user data.

In the case when such user data is stored in the HSS, it can be accessed by the SSF at the Sh reference point when the SSF is in the same domain.

On the contrary, when such user data is stored in the AS or in a stand alone server associated with one or more application servers or if the SSF in not in the same domain as the HSS, the user data can be accessed by the SSF using an interface that is out of scope for this release.

The SSF may also request notification of user data updates.

5 Service Provider Discovery

5.1 Introduction

In order for the UE to access the PSS and MBMS User Service using IMS, it shall implement an IMS client that registers to the IM CN Subsystem [7]. This assumes that the UE has attached to a network and established PS connectivity through a PDP context according to 3GPP TS 23.060 [16] and has successfully completed the P-CSCF discovery procedure [7]. Once the UE is registered to the IM CN Subsystem, it can proceed to the Discovery of the PSS and MBMS User Service.

This clause specifies how the UE performs the PSS and MBMS Service Provider Discovery. This is equivalent to discovering the list of IMS PSI of the SDF and relative Service Providers. There are several means for the UE to acquire this information. The UE shall implement the DNS based Service Provider Discovery as defined in clause 5.2. Other methods are optional.

5.2 DNS

In this case, the SDFs are discovered using the DNS SRV mechanism in accordance with RFC 2782 [17], with the following input parameters:

- Service: Defined as "pss-mbms-user-service".

NOTE: to be registered with IANA.

- Protocol: Can take values "http" or "sip". Specifies the protocol to contain the particular service.
- Domain name: the domain for which the returned records are valid. The value can be derived from the ISIM. Without ISIM it can be derived from USIM together with MCC (Mobile Country Code) and MNC (Mobile Network Code) according to TS 23.003 [29]. If not possible, the domain name can be derived from network attachment phase (DHCP server). Manual configuration overrides these possibilities.

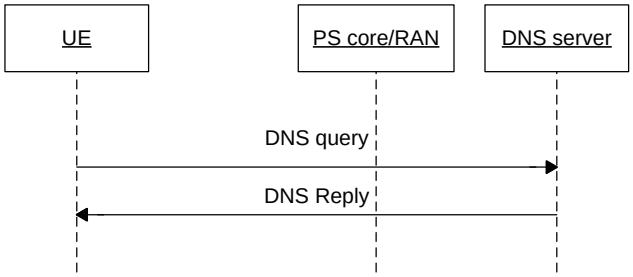

Figure 5: Service Provider Discovery with DNS

The output of the DNS SRV lookup is an ordered list of domain name, each pointing to a SDF server available within the specified Domain name.

5.3 Others

Alternatively, the SDF PSI may also be signalled to the UE by the following means:

- Manually provisioned in the UE.
- OMA Device Management.
- SMS.
- OMA Push.
- MBMS.

- DHCP.

6 User Service Discovery

6.1 Introduction

This clause specifies how the UE performs the PSS and MBMS User Service Discovery. This is equivalent to discovering the address of the SSF.

6.2 Subscribe/Notify

6.2.1 General description

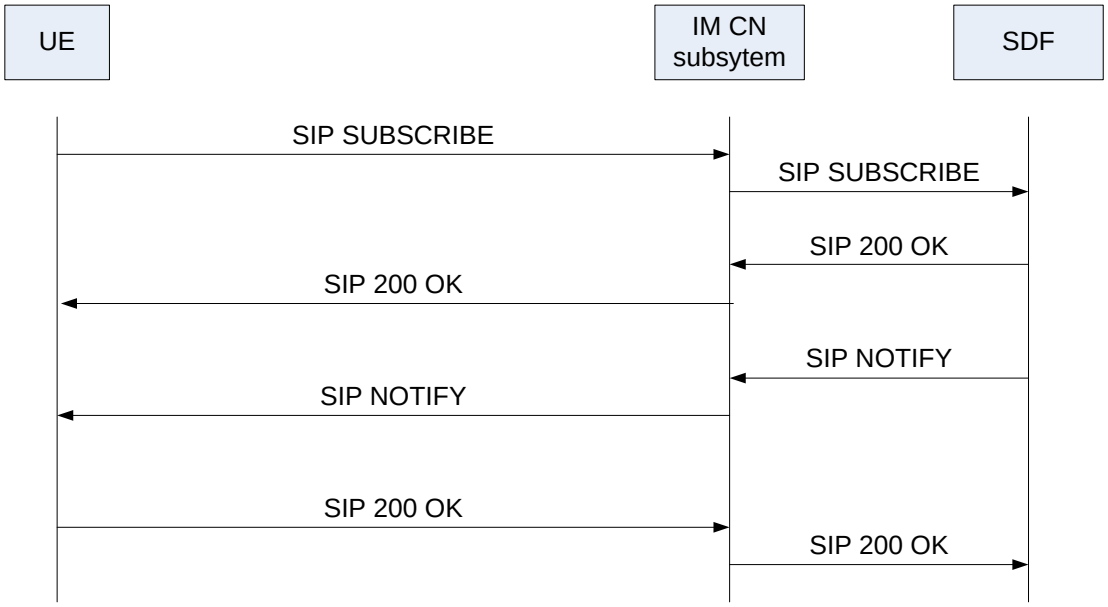

Figure 6: Service Discovery with Subscribe/Notify

1) The UE sends a SIP SUBSCRIBE message to the IM CN subsystem. It should indicate its capabilities in the message.

2) The IM CN subsystem forwards the request to the SDF, e.g. thanks to an iFC.

3) The SDF determines the proper service discovery information, e.g. according to the UE capabilities, the user's profile (Personalized Service Discovery). The user profile may be retrieved from the HSS or any other entity where it is stored.

4) The SDF sends a SIP 200 OK response to the IM CN subsystem, which forwards it to the UE.

5) The SDF sends a SIP NOTIFY message to the UE, with service discovery information that includes the SSF(s) address(es).

6) The IM CN subsystem relays the SIP NOTIFY message back to the UE, with the service discovery information related to PSS and MBMS user service.

7) The UE sends back a SIP 200 OK response to the IM CN subsystem.

8) The IM CN subsystem forwards the SIP 200 OK to the SDF.

6.2.2 Procedures at the UE

6.2.2.1 Introduction

The UE shall generate a SUBSCRIBE request. The behaviour of the UE when processing a SUBSCRIBE request shall conform to 3GPP TS 24.229 [7].

6.2.2.2 Subscription

When the UE intends to retrieve service attachment information from the SDF, it shall generate a SUBSCRIBE request for the "ua-profile" event package defined in [28] and extended as described in Annex Y of [24].

The contents of the SUBSCRIBE request shall be as follows:

- The value of the Request-URI shall be set to one of following:
  - the PSI of the SDF which is retrieved using SDF Discovery procedures in clause 5 Service Provider Discovery; or
  - the public user identity of the end user (when the UE does not know the PSI of the SDF).
- The From and To header shall be set to the public user identity of the user.
- The Accept header shall include the content-type identifier that corresponds to the registered MIME type of XML documents representing UE capabilities included in the body, See clause 4.4.2:
  - A first Content Type set to "application/3gpp-ims-pss-mbms-ue-capabilities+xml".
  - A second Content Type set to "application/rdf+xml".
- The Event header shall be set to the "ua-profile" event package.
- The Event parameters shall be set as follows:
  - The "profile-type" parameter shall be set to "application".
  - The "vendor", "model" and "version" parameter values shall be set to values specified by the implementer of the user equipment, as specified in 3GPP TS 24.229 [7].
  - The "appids" parameter shall be present and set to "urn:org:3gpp:applications:ims-pss-mbms-service-discovery".

The UE shall include a SIP SUBSCRIBE multipart/mixed content-type message body associated with the appid including the PSS and MBMS UE Device Capabilities defined in Annex G and the RDF/XML document describing the PSS base vocabulary defined in Annex F of TS 26.234 [8].

Upon receipt of a 2xx response to the SUBSCRIBE request, the UE shall store the information for the established dialog and the expiration time as indicated in the Expires header of the received response.

The UE shall automatically refresh the subscription, either 600 seconds before the expiration time if the initial subscription was for greater than 1 200 seconds, or when half of the time has expired if the initial subscription was for 1 200 seconds or less. If a SUBSCRIBE request to refresh a subscription fails with a non-481 response, the UE shall still consider the original subscription valid for the duration of the most recently known "Expires" value according to 3GPP TS 24.229 [7]. Otherwise, the UE shall consider the subscription invalid and start a new initial subscription according to 3GPP TS 24.229 [7].

6.2.2.3 Receiving notifications

Upon receipt of a NOTIFY request on the dialog which was generated during subscription, the application within the UE shall parse the XML document contained in the message body. The XML document schema is defined in Annex H. The definition of each parameter in the XML document is defined in 5.2.2.3 of [24]

The list of parameters in the XML document shall be used for service selection information retrieval according to clause 7.

When parsing the list of parameters the UE shall take the following action:

- information relates to an SSF with whom the UE has already an entry.
  - If the "@version" attribute is present and has not the same value or if not present, then the UE performs the following actions:
    - for parameters related to this SSF already present in the UE: the UE shall update these parameters with the new values sent by the SDF. If the Segment@Version has not the same value, the UE shall update user service selection information from the SSF before using it,
    - for parameters related to this SSF not present in the UE: the UE shall store the new parameters.
  - If the "@version" attribute is present and has the same value, the UE shall not update the stored SSF information.
- information relates to an SSF not known by the UE: the UE creates a new entry for this SSF with all indicated parameters.

After all elements have been processed, the UE shall return a 200 OK response to the NOTIFY request.

Failure to perform subscription refresh does not imply that there is a loss of communication to SSF or SCF. The UE has an option to continue using the lists of parameters from the last NOTIFY.

After deregistration, the UE may keep stored information on per user basis. As for subscription refresh, the UE may use the stored information if initial subscription fails after a new registration.

6.2.3 Procedures at the SDF

The SDF addresses are determined by the UE using any of the alternatives as defined in clause 5.

When the SDF receives a SUBSCRIBE request, it may perform user's identity verification as defined in 3GPP TS 24.229 [7]. After successful user identification, if a User Profile is available it is possible to perform personalization of the body (Service Attachment Information) of the NOTIFY request.

The SDF shall examine the parameters specified in the SIP SUBSCRIBE body and shall then record UE capabilities information as part of the user profile data.

NOTE: The UE capabilities that are recorded as part of the user profile may be used by the SSF for personalization purposes.

In case of successful subscription, the SDF shall generate a SIP 200 OK in response to the SUBSCRIBE request. The SDF shall then send a NOTIFY request immediately.

The contents of the NOTIFY request shall be as follows:

- The Event header shall be set to the "ua-profile" event package.
- The "effective-by" parameter for the event header shall be set to 0.
- The content type shall be set to "application/3gpp-ims-pss-mbms-service-discovery+xml";
- The message body shall contain an XML document listing SSF addresses and the means of connecting to the SSFs for retrieving service selection information defined in Annex H. The definition of each parameter in the XML document is defined in 5.2.2.3 of [24]. The "@technology" element name indicates the technology used to for delivering service selection information. It shall be set to the "openmobilealliance.org_bcast".

When any parameter of service configuration information has changed, the SDF may generate a NOTIFY request including new service configuration information.

7 User Service Description retrieval

7.1 Introduction

User Service Description retrieval can be done in several ways

- By retrieving OMA BCAST Service Guide information [27] from the SSF. See clause 7.2;
- By retrieving MBMS USD from the SSF as defined in 3GPP TS 26.346 [11] clause 5.2;
- By executing the Procedure for providing missing parameters before session initiation described in clauses 8.2.2 and 8.3.2 for PSS and MBMS user service respectively.

7.2 User Service Description retrieval for PSS and MBMS

7.2.1 Procedures at the UE

7.2.1.1 Procedure for Service Personalisation

For HTTP-based data retrieval, when sending the HTTP request to the SSFs, the UE may provide personalized information to enable a personalized answer. This shall be done by adding the X-3GPP-Intended-Identity HTTP header to the request to transmit the public identity.

The authentication shall follow 3GPP TS 33.222 [20].

The UE shall implement Transport Layer Security (TLS), as described in 3GPP TS 33.222 [20].

7.2.1.2 Request of OMA BCAST ESG

In the pull model of unicast delivery of an OMA BCAST ESG, the HTTP protocol shall be used conforming to OMA BCAST Service_Guide [27], clause 5.4.3.

7.2.1.3 Use of Service Description information

The UE shall use parameters received from the SSF for session initiation.

NOTE: There is no restriction on the UE to use any parameter received from SSF also for other purposes than session initiation, e.g. to present SSF information to the user.

The UE may store a part of the ESG information covering certain period of time and refresh this information periodically This avoid the UE to contact the SSF every time the user needs to consult the ESG.

If the UE is unable to contact any discovered SSF, it shall not delete stored information immediately.

7.2.2 Procedures at the SSF

7.2.2.1 Authentication and authorisation in case of personalized service description information

In case of service selection personalisation the SSF shall authenticate the user.

The authentication shall follow 3GPP TS 33.222 [20].

The SSF shall implement Transport Layer Security (TLS) as described in 3GPP TS 33.222 [20].

An authentication proxy (AP) may exist between the UE and the SSF in which case the behaviour of the AP is assumed to conform to 3GPP TS 24.423 [21].

If an Authentication Proxy (AP) is provided in the path of the HTTP request, then the SSF receives an HTTP request from a trusted source (the AP) and the request contains an HTTP X-3GPP-Asserted-Identity header (3GPP TS 24.109 [22]) that includes an asserted identity of the user. In this case the SSF does not need to authenticate the user, but just provide authorization to access the requested resource.

If an HTTP X-3GPP-Asserted-Identity header (3GPP TS 24.109 [22]) is not present in the HTTP request or if the request is received from a non-trusted source, then the SSF needs to authenticate the user prior to providing personalise information by applying the procedures defined in 3GPP TS 33.222 [20] and

authorize or deny authorization depending on the authenticated identity.

7.2.2.2 Procedure for Service Personalization

If the public user identity information is present in the query from the UE, the SSF shall extract it to customize/personalize the service information that is returned in the query response.

The SSF shall use the public user identity that is specified in the X-3GPP-Intended-Identity header or the X-3GPPAsserted-Identity header if an authentication proxy is used to fetch the corresponding user profile associated with the user. For instance, the Parental Control (if present) should be used to remove unsuitable elements from the COD listings that are returned to the UE.

7.2.2.3 Delivery of OMA BCAST ESG

The procedure for retrieving OMA BCAST service selection information is employed to retrieve one or more Service Guide Delivery Descriptors (SGDD) and/or Service Guide Delivery Units (SGDU). The SGDD describes service level information as well as access information to the Service Guide fragments. The SGDU is the transport-independent network structure for encapsulating Service Guide fragments.

When the ESG SSF receives a HTTP POST request, if personalization headers are presents (in the form of key-value pairs) it shall use those headers in order to build a personalized response. For instance, the ESG SSF may use the provided user identity to retrieve the associated Parental Control Level in the user profile. This Parental Control Level would then be used to remove non suitable elements from the ESG data that are sent back. The provided user identity may also be used to retrieve a personalized ESG using the method in OMA BCAST Service Guide [27], clause 5.4.3.3.The ESG SSF shall send an HTTP response conforming to OMA BCAST Service Guide [27], clause 5.4.3.1. The body of the HTTP response shall contain an XML document with SGResponse data, conforming to OMA BCAST Service Guide[27], clause 5.4.3.1.1.

8 Streaming session and media control

8.1 General

This clause specifies the procedures and protocols used for the IMS based initiation and control of streaming sessions on PSS or MBMS User Service.

The client shall use SIP to initiate and control PSS and MBMS streaming sessions. Once a PSS streaming session is established, the client shall use RTSP protocols to perform media control.

8.2 PSS Streaming

8.2.1 PSS Media codecs and formats

PSS Media codecs and formats defined in 3GPP TS 26.234 [8] are applicable to the present document for IMS initiated and controlled PSS services.

8.2.2 Procedure for providing missing parameters

8.2.2.1 Procedures at the UE

If the UE does not have all the information it needs to form an SDP offer, the UE shall send a SIP OPTIONS message:

- The "Request-URI" is related to the PSS session that the user wants to activate. The Request-URI shall be composed of a user and domain part as defined as follows:
  - The user part contains the content identifier, retrieved from user service description information from SSF.
    - For COD service, content identifier is constructed by “PSS_COD_<content-id>”, wherein content-id shall be globalContentID defined in [27].
    - For Live service, content identifier shall be globalServiceID defined in [27] or serviceId defined in [11].
  - The domain part is the Service Provider domain name, obtained from SSF.
- The TO header shall contain the same URI as in the "Request-URI" parameter.

The other headers shall be set according to TS 24.229 [7].

Upon reception of the 200 OK including SDP, the UE may initiate PSS session as described in clause 8.2.3.

8.2.2.2 Procedures at the SCF

When receiving the SIP OPTIONS message, the SCF shall select the appropriate PSS Adapter and forward the SIP request to the appropriate PSS Adapter by changing the "Request-URI" accordingly.

The SCF shall not change the user-part of the TO header in order to keep the content-id in the OPTIONS request.

8.2.2.3 Procedures at the PSS Adapter

When receiving SIP OPTIONS request, the PSS Adapter shall examine the content identifier present in the user-part of the TO header.

If the PSS adapter does not have the user service description information, it shall send an RTSP DESCRIBE message to the PSS server to retrieve the user service description information

Then, the PSS Adapter shall answer with the user service description information of the content delivery channel in SDP as requested by the request URI.

8.2.3 PSS Streaming Session initiation

8.2.3.1 General description

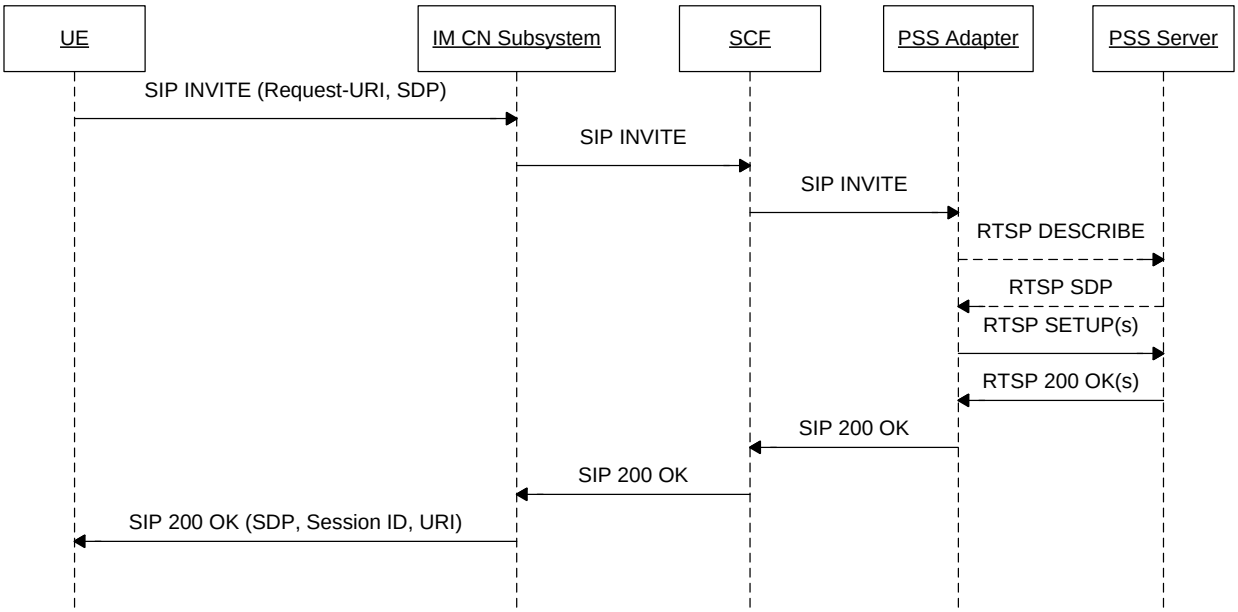

Figure 7: IMS based PSS initiation

NOTE 1: This sequence is simplified and does not e.g. show session progress messages and the ACK message from the UE in response to the reception of 200 OK.

NOTE 2: SIP messages between PSS adapter and SCF go through the IM CN Subsystem even if not indicated on the sequences.

8.2.3.2 Procedures at the UE

The UE shall generate an initial INVITE request according to TS 24.229 [7] with the following additions:

- The Request-URI is related to the PSS session that the user wants to activate.
  - For an On Demand service, it shall be composed of a user part and a domain part, as follows:
    - A user part containing the content identifier in a free string format.
      - Content identifier is constructed by “PSS_COD_<content-id>”, wherein content-id shall be globalContentID defined in [27].
    - A domain part containing the content provider domain name, obtained from the SSF.
  - For Live content, it shall contain the PSI (Public Service Identity) of the "Live stream@<domain name>", wherein the domain name is obtained from SSF".
- The To header shall contain the same URI as in the Request-URI.
- The Recv-Info header shall be empty [42].

The other headers shall be set according to TS 24.229 [7].

An SDP Offer shall be included in the initial INVITE request, in accordance with media capabilities and policies available for the PSS session and with the parameters received from the SSF during service selection procedure.

The SDP offer shall contain a media description for the RTSP content control channel and one for the content delivery channel. The RTSP content control media description shall be carried by TCP.

The SDP parameters for the RTSP content control channel shall be set as follows:

- a 'm' line for an RTSP stream of format: m=<media> <port> <transport> <fmt>
  - The media field shall have a value of "application".
  - The port field shall be set to a value of 9, which is the discard port. See RFC 4145 [13] and RFC 4572 [14].
  - The transport field shall be set to TCP or TCP/TLS. The former is used when RTSP runs directly on top of TCP and the latter is used when RTSP runs on top of TLS, which in turn runs on top of TCP.
  - The <fmt> parameter shall be included and shall be set to *3gpp_rtsp*.

NOTE: the *3gpp_rtsp* application format should have a new MIME subtype registered in IANA.

- An "a=setup" attribute shall be present and set to "active" indicating that the UE will initiate an outgoing TCP connection to the PSS Adapter [7] and [13].
- An "a= connection" attribute shall be present and set as "new" " indicating that the UE will establish a new outgoing TCP connection towards the PSS Adapter [7] and [13].
- A "c" line shall include the network type with the value set to IN, the address type set to IP4 or IP6 and IP address of the flow of the related RTSP content control (ex. `c=IN IP4 <IP_ADDRESS>`).
- For Live service, an “a=PSS_Live_service: ServiceID” line shall be include to indicate the PSS live service which the UE intends to initiate. The ServiceID shall be globalServiceID defined in [27] or serviceId defined in [11], which is retrieved from service selection information.

Example of RTSP ‘m' line offer from the UE:

```
m=application 9 TCP 3gpp_rtsp
c=IN IP4 192.0.2.2
a=setup:active
a=connection:new
```

For each media stream controlled by the RTSP content control channel, the SDP offer shall include a "receiver only" content delivery channel media description set as defined in 3GPP TS 26.234 [8], clause 5.3.3:

- the "m=" line indicates the type of the media, the transport protocol and the port of the related content delivery channel. It may also include a fmt parameter which shall indicate the format given by the SSF or by executing the procedure for providing missing parameters before session initiation described in clauses 8.2.2, a subset of them or the format offered by the UE if none is given by the SSF;
- the "c=" line shall include the network type with the value set to IN, the address type set to IP4 or IP6 and unicast address of the flow of the related content delivery channel;
  (ex. c=IN IP4 <IP_ADDRESS>)
- optionally a "b=" line may contain the proposed bandwidth. If the user has fetched the bandwidth required for this particular content delivery channel during service selection retrieval, the bandwidth attribute at media level shall be set to this value. Otherwise, this attribute shall be set to a pre-configured value;
  (ex. b=AS:15000)
- A "a=" line with a "recvonly".

The UE should receive a SIP 200 OK back containing the answer SDP.

8.2.3.3 Procedures at the IM CN Subsystem

The IM CN Subsystem handles the SIP dialog as defined in 3GPP TS 23.228 [6].

8.2.3.4 Procedures at the SCF

Upon receipt of SIP INVITE request, the SCF shall examine the Request-URI and SDP parameters to determine that it is a PSS session initiation request for Live Streaming or Content-On-Demand. According to the user subscription information, the SCF shall check the service rights of the requested PSS service.

If the Request-URI contains a content identifier in the user part and a domain name in the domain part, the SCF determines that the PSS streaming session is initiated for On Demand content. In this case, the SCF shall select a suitable PSS adapter and forwards the SIP INVITE to the selected PSS adapter by changing the Request-URI accordingly. The SCF shall not change the user part of the To header in order to keep the content identifier in the INVITE request.

When receiving a 301 or 302 response from the PSS adapter, the SCF shall not forward this message to the UE. It may check if the PSS adapter indicated in the Contact header belong to allowed destination. If allowed, the SCF shall use one of the PSS adapter URI indicated in the Contact header of this response and use it as a destination for the redirected INVITE.

If the request-URI contains the PSI " Live Stream", the SCF determines that the PSS streaming session is initiated for Live content. In this case, the SCF shall select a suitable PSS adapter and forwards the SIP INVITE to the selected PSS adapter. The SCF shall include the list of authorized Live content channels for the user in the SIP INVITE transmitted to the PSS adapter by including the package identifiers containing to the list of authorized Live content channels for the session and optionally transmitting the list of authorized RTSP URIs.

The Recv-Info header shall indicate the supported Info Package (“Content-Reporting”) for reception and processing by the SCF [42]. The “Content-Reporting” info package is defined in annex Q of [44].

Based on the Request-URI and SDP parameters, the SCF selects a suitable PSS Adapter and forwards the SIP INVITE to the selected PSS Adapter.

Once receiving a SIP 200 OK response from PSS Adapter, the SCF shall check the Recv-Info header and remove it from the response. Following that the SCF shall forward the revised response to UE.

8.2.3.5 Procedures at the PSS Adapter

The PSS Adapter shall be statefully aware of any sessions between the PSS Adapter and a UE, and the PSS Adapter and the PSS Server related to the same streaming session . This means that the RTSP session between the PSS Adapter and the PSS Server and the SIP & RTSP sessions between the PSS Adapter and the UE are associated at the PSS Adapter in order to keep session structure and alignment. This includes, but is not limited to, RTSP parameters such as sessionId, IP version, CSeq, etc.

The PSS Adapter shall support the following RTSP methods for PSS Server session establishment and teardown control:

- DESCRIBE (PSS Adapter to PSS Server).
- SETUP (PSS Adapter to PSS Server).
- TEARDOWN (PSS Adapter to PSS Server).

The PSS Adapter should support the "3gpp-pipelined" feature so as to be able to pipeline SETUP messages.

Upon receipt of a SIP INVITE message, the PSS Adapter performs the following actions:

- It shall resolve the RTSP URI based on the R-URI, the SDP parameters and the selected PSS Server.
- It may send a DESCRIBE message to the PSS Server to fetch the SDP file.
- It shall construct and send the RTSP SETUP message(s) to setup the relevant media streams.
- Return the answer SDP to the UE in the SIP 200 OK.

The PSS Adapter shall construct the RTSP SETUP message according to the SIP Invite as follows:

- The Request-Line shall be present of format: Request-Line = Method SP Request-URI SP RTSP-Version CRLF:
  - Method field is set to SETUP;

  - RTSP-Version field to be set of RTSP/1.0.

- The CSeq header field is set to a value allocated by PSS Adapter according to RFC 2326 [25]
- The transport header field:
  - the protocol and profile sub-fields together are set to a value of the protocol sub-field of the corresponding "m=" line in the SDP offer,
  - the unicast | multicast parameter is set to unicast.
  - The destination parameter is set to a value of the "c=" line of the corresponding media delivery channel in the SDP offer,
  - The RTP port value of client_port parameter is set to the value of the port sub-field of the corresponding "m=" line in the SDP offer, and the RTCP port value of client_port parameter is set to a value of the RTP port value plus 1.

An example of the RTSP SETUP message is:

PSS Adapter->PSS Server: SETUP rtsp://media.example.com/movie001/audiotrack RTSP/1.0
CSeq: 1
Transport: RTP/AVP/UDP; unicast; destination=<IP ADDRESS>; client_port=3400-3401

The PSS Adapter may send multiple RTSP SETUP messages if multiple media delivery channels are carried within the SDP offer. In this case, the pipeline of multiple RTSP SETUP messages may be supported.

When receiving a RTSP 200 OK response from the PSS Server, the PSS Adapter parses the response, constructs a SIP 200 OK response with the final SDP, and sends the SIP 200 OK response to the SCF. The final SDP shall describe the RTSP session established by the PSS Adapter and the TCP connection to be established by the UE.

The PSS Adapter shall construct the SIP 200 OK message according to RTSP 200 OK as follows:

- The Recv-Info header shall be set to “ContentReportConfig” [42].
- an 'm' line for an RTSP stream of format: m=<media> <port> <transport> <fmt>
  - The media field shall have a value of "application".
  - The port field shall be set to the value allocated by PSS Adapter for the UE to establish RTSP session, such as 554.
  - The transport field shall be set to TCP or TCP/TLS. The former is used when RTSP runs directly on top of TCP and the latter is used when RTSP runs on top of TLS, which in turn runs on top of TCP.
- a "c" line shall include the network type with the value set to IN, the address type set to IP4 or IP6 and IP address of PSS Adapter for the flow of the related RTSP content control (e.g. `c=IN IP4 <IP_ADDRESS>`).
- The "setup" attribute is set to 'passive' indicating that connection shall be initiated by the other endpoint (UE).
- An "a= connection" attribute shall be present and set as "new" indicating that the UE will establish a new outgoing TCP connection towards the PSS Adapter [7][13].
- An "a=control" attribute shall be present in the format of an absolute URI to be used for the UE in the subsequent RTSP requests.
- One or more a=fmtp lines representing RTSP specific attributes set as follows:
  - a "fmtp:3gpp_rtsp h-session" attribute representing the session identifier for the RTSP session to be established with the UE.

The PSS Adapter may include "fmtp: 3gpp_rtsp h-offset" attribute that indicates where the playback is to start from.

Example of RTSP ‘m' line answer from the PSS Adapter:

```
m=application 554 TCP 3gpp_rtsp
c=IN IP4 192.0.2.1
a=setup:passive
a=connection:new
a=control:rtsp://example.com/channel/content1.sdp
a=fmtp 3gpp_rtsp h-session=12345
a=fmtp 3gpp_rtsp h-offset=30
```

For each media stream controlled by the RTSP content control channel, the SDP answer shall include a content delivery channel media description set as follows:

- the "m=" line indicates the type of the media, the transport protocol and the port of the related content delivery channel.

- The port value shall be set to the RTP port value retrieved from the server_port parameter in the RTSP 200 OK message.
- If an fmt parameter is in the SDP offer it shall be completed with the supported format by the PSS Server;
- the "c=" line shall include the network type with the value set to IN, the address type set to IP4 or IP6 and the unicast address of the PSS Server for the flow related to the content delivery channel,
  (ex. c=IN IP4 <IP_ADDRESS>);
- the "b=" line shall contain the proposed bandwidth. Since the PSS media stream is unidirectional the bandwidth shall be set to 0, except for the case that the transport is RTP and RTCP is allowed.
  (ex. b=AS:0);
- an "a=" line with a value of "sendonly". (ex. a=sendonly).

8.2.4 PSS Streaming Playback Control

8.2.4.1 General Description

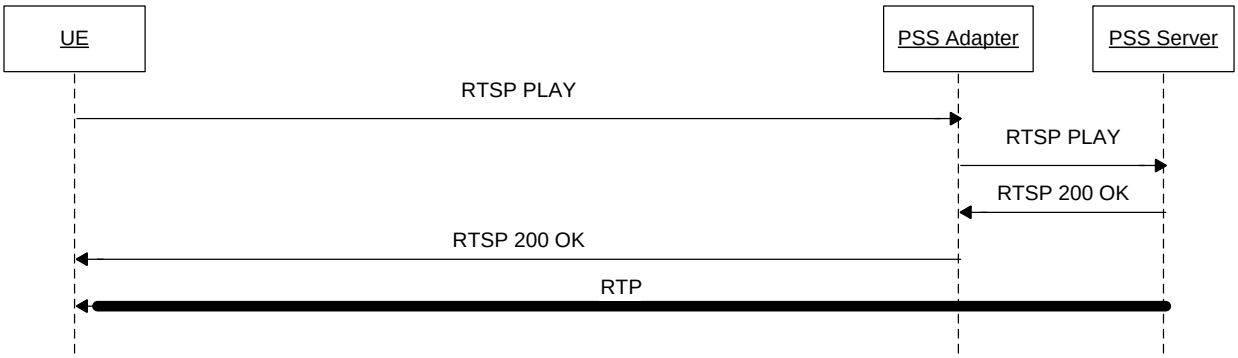

Figure 8: Initial Payback

8.2.4.2 Procedures at the UE

The UE shall support the following RTSP methods for RTSP playback control:

- PLAY (UE to PSS Adapter).
- PAUSE (UE to PSS Adapter).
- GET_PARAMETER (UE to PSS Adapter).
- SET_PARAMETER (UE to PSS Adapter).
- OPTIONS (UE to PSS Adapter).

When receiving any SIP response, the UE shall examine the media parameters in the received SDP: the UE shall immediately setup the TCP connection carrying RTSP. The UE shall fetch the RTSP session ID from the SDP answer contained in the SIP response. This RTSP session ID shall be used for RTSP media control messages.

After SIP session establishment, the UE can exchange RTSP messages to start to receive media streams. The UE shall send an RTSP PLAY message to the PSS adapter according to 3GPP TS 26.234 [8].

- The RTSP URL shall be set to the value retrieved from the SDP "a=control" attribute in the case of an absolute URI. If the value of "a=control" is a relative URI that is in the form of a media path, then the RTSP absolute

URL is constructed by the UE using the SDP IP address (from c-line) and port (from m-line) as the base followed by "a=control" value for the media path.

- The RTSP session ID in the h-session received in the SDP shall be used in RTSP media control messages.
- The version attribute shall be present in the SDP and its value shall be 1.0 in this version of the specification.
- If the h-offset attribute is present in the SDP, the Range parameter in the first RTSP PLAY message may be set to its value. E.g. Range: npt=<OFFSET>- (with OFFSET being the value of the h-offset attribute).

8.2.4.3 Procedures at the PSS Adapter

If the PSS Adapter supports the proxying of RTSP towards the PSS Server then the following methods shall be supported:

- PLAY;
- PAUSE;
- GET_PARAMETER;
- SET_PARAMETER;
- OPTIONS.

Upon receipt of a RTSP message from an UE, the PSS Adapter shall match the RTSP session with the RTSP sessions once established with PSS Server according to the Session ID carried in the received RTSP message. If there is a session match, PSS Adapter shall send the RTSP message to PSS Server on the matched RTSP session. If no session matches, PSS Adapter shall response with a RTSP error code 454 (Session Not Found).

When receiving a RTSP response message from a PSS Server, the PSS Adapter shall match the RTSP session with the RTSP sessions once established with UEs according to the Session ID carried in the received RTSP response message, and send the RTSP response message to UE on the matched RTSP session.

The PSS Adapter should send a SIP INFO message to the SCF indicating that playback has started. This SIP INFO message should be equal to the SIP INFO messages for PSS content switching defined in clause 8.2.5.

8.2.4.4 Procedures at the PSS Server

The procedures at the PSS Server shall conform to those defined in 3GPP TS 26.234 [8].

8.2.5 PSS content switching

8.2.5.1 PSS Streaming session modification

8.2.5.1.1 General description

NOTE 1: The specification assumes the UE will trigger a Re-INVITE procedure to change the QoS to fit the new channel requirements. It will be considered whether the network can trigger the QoS change without the UE taking management.

This procedure presents the generic PSS streaming session modification procedure. It can be referred in some cases for PSS Content Switching, when there is a change of media components and/or bandwidth.

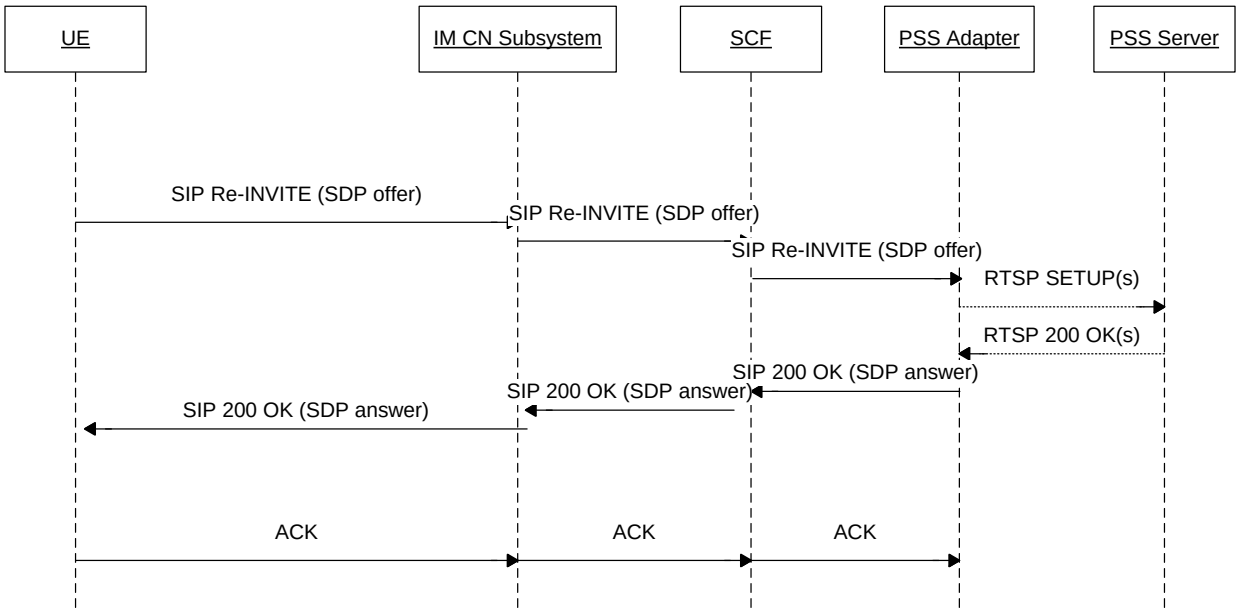

Figure 9: UE-initiated PSS session modification

NOTE 2: Like in other call-flows of the specification, the figure does not show that messages exchanged between the PSS adapter and the SCF are routed through the IM CN subsystem.

1) The UE sends the Re-INVITE request containing the SDP offer to the IM CN Subsystem to establish the content delivery channel. The IM CN Subsystem may require the PCRF to reserve additional resources for RTP streams according to the SDP in the Re-INVITE. The IM CN subsystem may also issue the PCRF to release resources for RTP streams.

2) The IM CN Subsystem forwards the Re-INVITE request to the SCF.

3) The SCF sends the Re-INVITE to the PSS adapter via the IM CN Subsystem.

4) The PSS adapter sends the according number of RTSP SETUP to the PSS server, if additional media components are described in the SDP.

5) The PSS server responds with RTSP 200 OK to the PSS adapter (only, if the PSS adapter has send SETUP messages to the PSS Server).

6) The PSS adapter sends one SIP 200 OK to the SCF with the SDP answer containing the new media descriptions of RTP streams to be used.

7) The SCF sends the SIP 200 OK to the IM CN Subsystem. The IM CN subsystem interacts with the PCRF to commit the reservation, and then forwards the SIP 200 OK to the UE.

8) The UE sends the SIP ACK to the IM CN subsystem, which forwards to the SCF. The SCF forwards the SIP ACK to the PSS adapter.

8.2.5.1.2 Procedures at the UE

To modify the session, the UE shall send a Re-INVITE or an UPDATE request as specified in TS 24.229 [7] for an originating UE.

The UE shall not modify RTSP channel m-line description in the SDP if the media delivery streams controlled by RTSP are not removed (port not set to 0 in the m lines) in the SDP.

8.2.5.1.3 Procedures at the IM CN subsystem

The IM CN subsystem handles the SIP dialog as defined in 3GPP TS 23.228 [6].

8.2.5.1.4 Procedures at the SCF

Upon receipt of a Re-INVITE request or an UPDATE request, the SCF shall follow the procedures defined in TS 24.229 [7] concerning the AS acting as a proxy or a B2BUA.

When receiving an SDP offer, the SCF may modify the SDP offer in accordance to the user subscription. If the SCF finds a media line not compatible with the user's subscription, it shall set the port of this media line to 0. If none of the media lines are acceptable, it shall reply with a 403 error response.

Then the SCF forwards the Re-INVITE message to the PSS adapter.

8.2.5.1.5 Procedures at the PSS adapter

Upon receipt of a Re-INVITE request or an UPDATE request, the PSS adapter shall modify the session as specified in TS 24.229 [7] if the request is acceptable to the PSS adapter in accordance with the user subscription.

The PSS adapter sets up new media components, if the SDP file contains additional components.

8.2.5.1.6 Procedures at the PSS server

Upon receipt of an RTSP setup, the PSS server executes the requested method and responds with an RTSP status code to the PSS adapter.

8.2.5.2 PSS Content switching with available SDP, no change of media component and bandwidth

8.2.5.2.1 General description

The UE has retrieved the SDP prior to the content switching. The procedure is as described as in 3GPP TS 26.234 [8], with the server role being played by the PSS adapter.

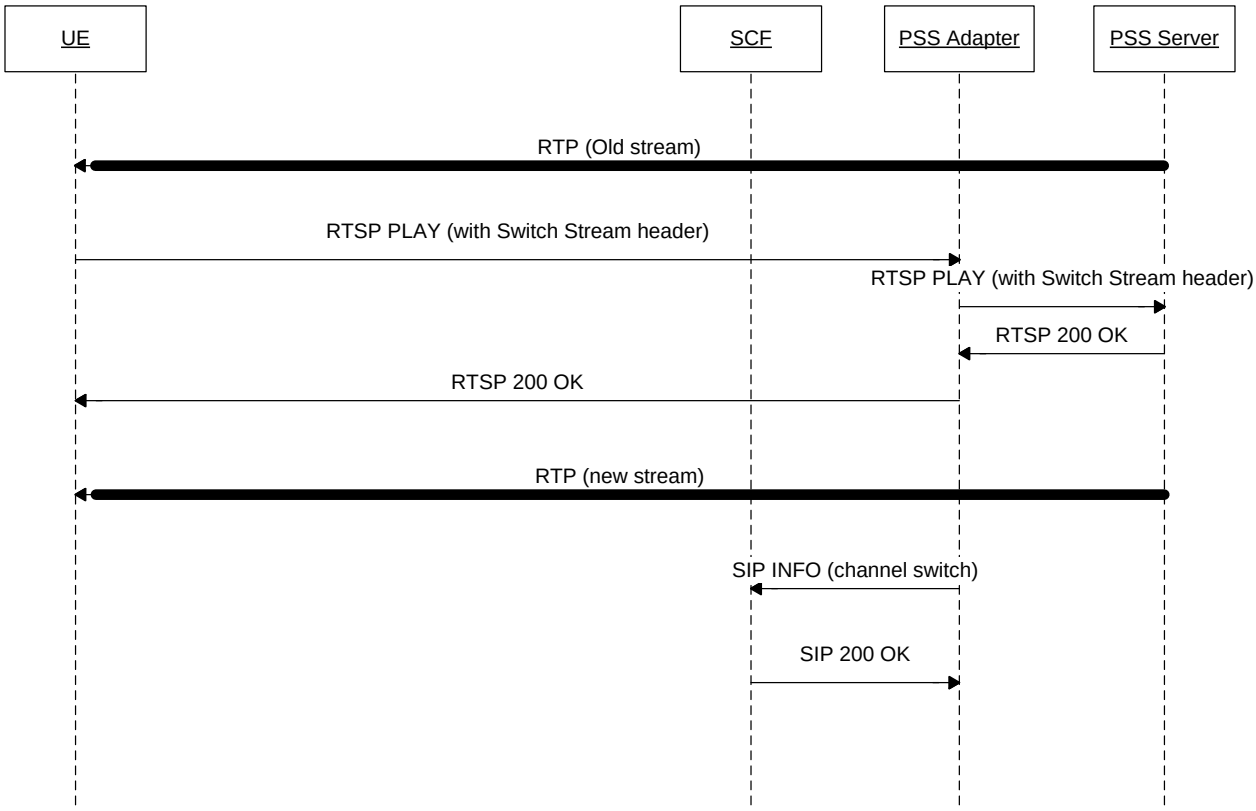

Figure 10: IMS PSS Content switching

1) The UE sends a PLAY request with the aggregated control URI of the new content to the PSS adapter. The PSS client adds the media control URIs of the new streams in the "Switch-Stream" header field to the RTSP PLAY method request as defined 3GPP TS 26.234 [8] clause 5.5.4.3.

2) The PSS Adapter sends the RTSP PLAY message to the PSS Server.

3) The PSS Server responses a RTSP 200 OK message to the PSS Adapter.

4) The PSS Adapter sends the RTSP 200 OK message to UE.

5) The PSS server delivers the switched content streams to the UE.

6) The PSS Adapter should send a SIP INFO message including the Info Package (Content Reporting) to the SCF with content switching information. See clause 8.2.5.2.5.

The SCF may utilize the content switching information for statistic, charging etc. purpose, and may initiate a SIP Re-INVITE request to the UE to adjust the QoS reservation if the transport resources changed before and after switching.

8.2.5.2.2 Procedures at the UE

To switch content of the PSS streaming session the UE shall send an RTSP PLAY request with the new content URI as defined in TS 26.234 [8] clause 5.5.4.

8.2.5.2.3 Procedures at the IM CN Subsystem

The IM CN subsystem handles the SIP dialog as defined in 3GPP TS 23.228 [6].

8.2.5.2.4 Procedures at the SCF

Upon receipt of a SIP INFO message the SCF shall send a SIP 200 OK to the PSS adapter.

8.2.5.2.5 Procedures at the PSS Adapter

Upon identification of a successful content switch, the PSS Adapter starts the content switching timer for a particular session. If another content switch occurs during the life of the timer, the timer is restarted. If the session is terminated during the life of the timer, the timer is stopped. After timer expiration, the PSS Adapter should send a SIP INFO message with the Info Package (Content Reporting) to the SCF. The Content Reporting Info Package shall contain an XML document as defined in Annex D and Annex E.

- ImsPssMbmsCommand shall be set to "PssSwitch".
- ContentID is set to the RTSP URI of the new content.
- DateTime is set to the current date and time.

The Content-Type header shall be set to "application/3gpp-ims-pss-mbms-command+xml".

8.2.5.2.6 Procedures at the PSS Server

The PSS Server reacts as defined in 3GPP TS 26.234 [8] clause 5.5.4.

8.2.5.3 PSS Content switching with available SDP, change of media components or QoS

8.2.5.3.1 General Description

Fast Content Switching as defined in 26.234 [8] Clause 5.5.4 allows also changing content when the new content channel requires a different number or characteristics of media components as the old content channel, or when the bandwidth needs to be modified.

For instance, the old content stream consists out of an audio and a video stream and the new content channel offers an audio, video and 3GPP Timed Text media component. Addition a media component to an ongoing stream is defined in 26.234 [8] clause 5.5.4.6 and removing a media component in 26.234 [8] clause 5.5.4.7.

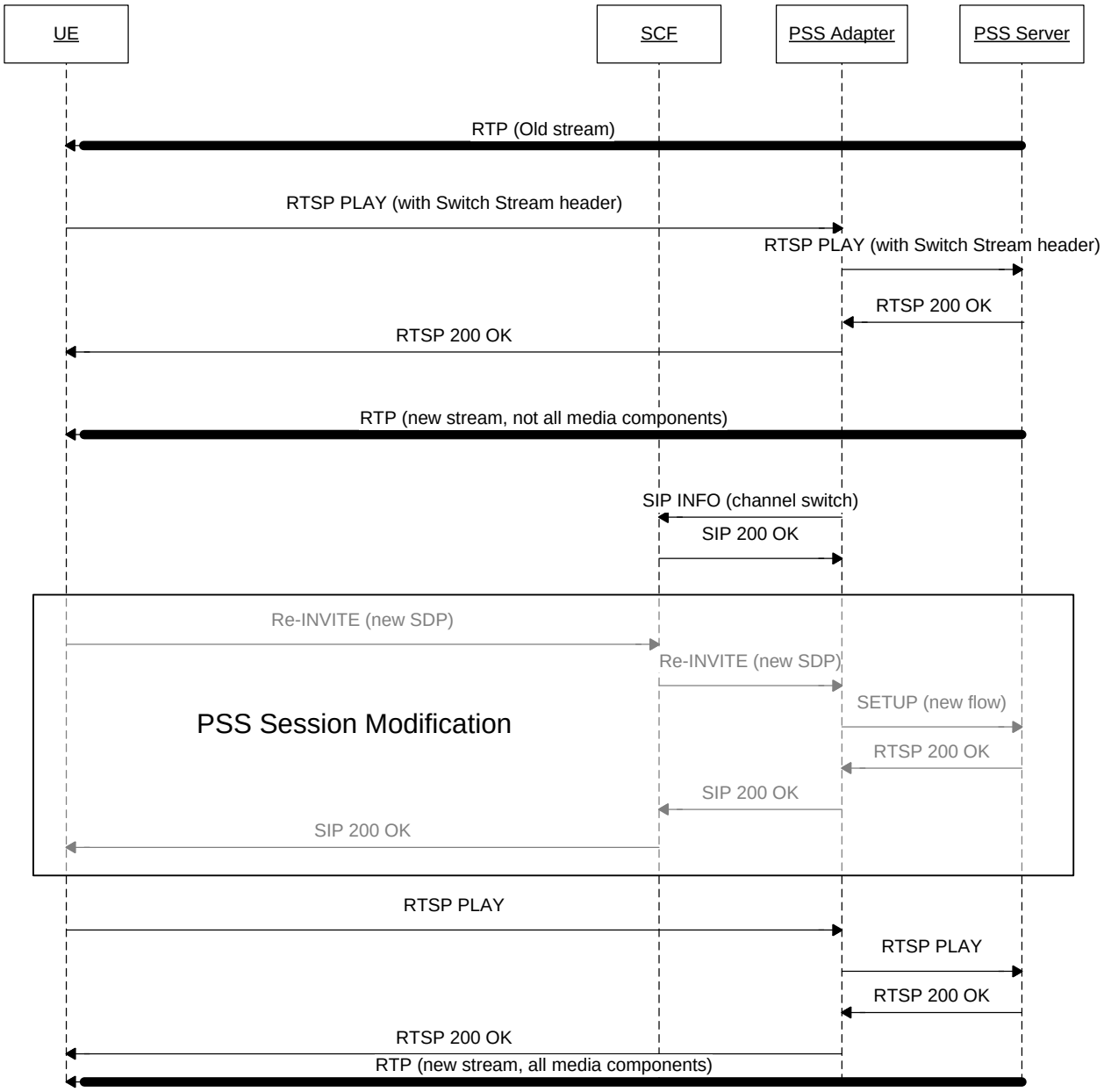

Figure 11: IMS PSS Content switching

NOTE 1: This sequence is simplified and does not e.g. show the ACK message from in response to the reception of 200 OK.

NOTE 2: The number of required RTSP SETUP interactions between the PSS Adapter and the PSS Server depend on the number of new media components in the SDP.

The UE determines that the new SDP file contains a different number of media components as the old SDP. The UE updates the streaming session by sending a Re-INVITE with the new SDP file, as described in clause 8.2.3.2. The Re-INVITE is sent either before, during or after the RTSP PLAY switch. As soon as the UE receives the 200 OK for the Re-INVITE, the UE initiates a PLAY to get the new synchronization information.

8.2.5.3.2 Procedures at the UE

The UE shall send an RTSP PLAY request with the new content URI as defined in TS 26.234 [8] clause 5.5.4. The UE changes the number of media components by sending a Re-INVITE message with the new SDP offer. After receiving the 200 OK for the Re-INVITE the UE initiates a PLAY to get the new synchronization information.

8.2.5.3.3 Procedures at the IM CN Subsystem

The IM CN subsystem handles the SIP dialog as defined in 3GPP TS 23.228 [6].

8.2.5.3.4 Procedures at the SCF

Upon receipt of a SIP INFO message the SCF shall send a SIP 200 OK to the PSS adapter.

8.2.5.3.5 Procedures at the PSS Adapter

Upon identification of a successful content switch, the PSS Adapter starts the content switching timer for a particular session. If another content switch occurs during the life of the timer, the timer is restarted. If the session is terminated during the life of the timer, the timer is stopped. After timer expiration, the PSS Adapter should send a SIP INFO message with the Info Package (Content Reporting) to the SCF. The Content Reporting Info Package shall contain an XML document as defined in Annex D and Annex E.

- ImsPssMbmsCommand shall be set to "PssSwitch".
- ContentID is set to the RTSP URI of the new content.
- DateTime is set to the current date and time.

The Content-Type header shall be set to "application/3gpp-ims-pss-mbms-command+xml".

When receiving the SIP Re-INVITE message from the SCF, if a new media component needs to be added or removed, the PSS adapter shall send the RTSP SETUP to the PSS server, indicating the new media component that needs to be added or removed.

8.2.5.3.6 Procedures at the PSS Server

The PSS Server behaves as defined in 3GPP TS 26.234 [8] clause 5.5.4

8.2.5.4 PSS Content switching with unavailable SDP, no change of media component and/or bandwidth

8.2.5.4.1 General description

In this case, the UE does not have the SDP for the streams it intends to switch to. The new content has same media and bandwidth characteristics.

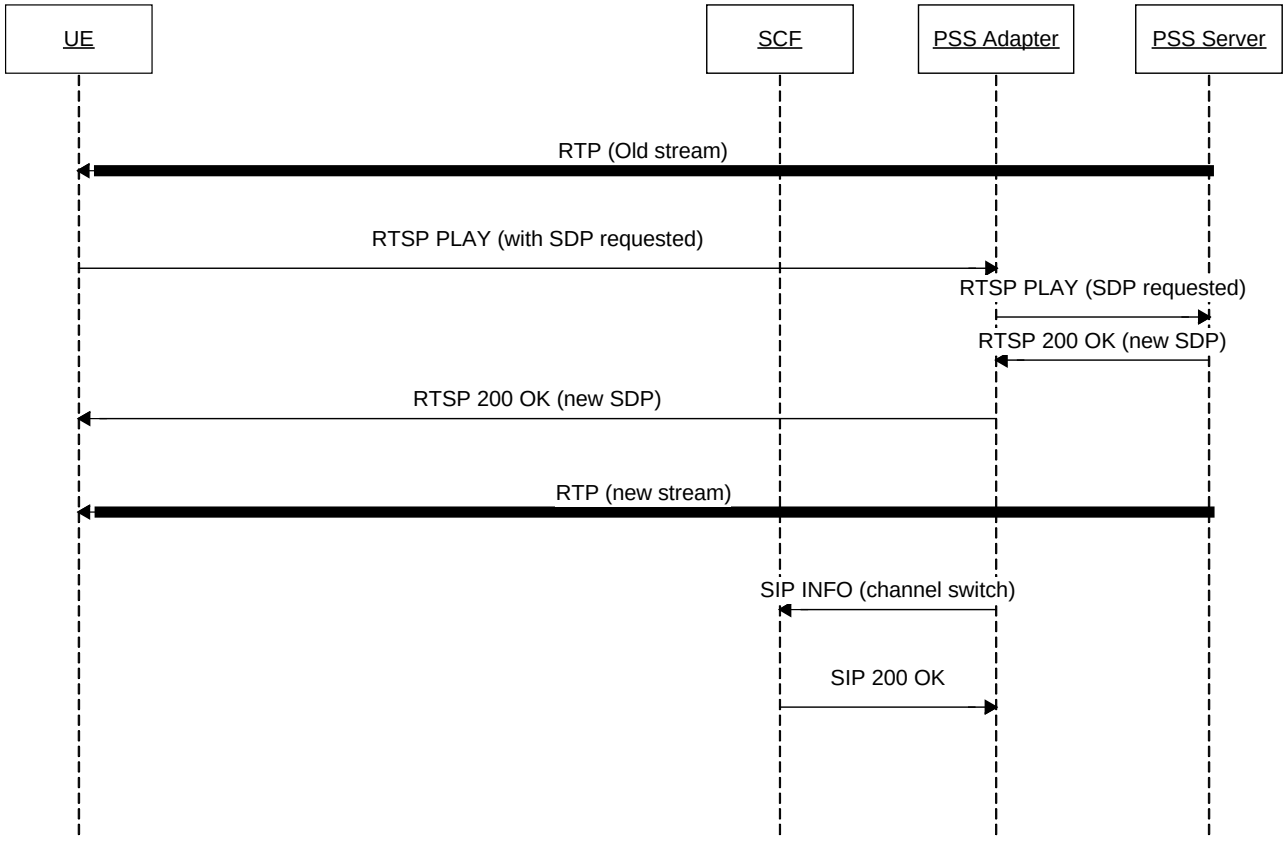

Figure 12: IMS PSS Content switching without available SDP, no change of media component and/or bandwidth

The UE sends a PLAY request to the PSS adapter indicating that it needs the SDP for the new streams. The PSS Adapter sends the RTSP PLAY message to the PSS Server.

The PSS Server responses a RTSP 200 OK message to the PSS Adapter, PSS Adapter sends the RTSP 200 OK message to UE containing the SDP for the new streams.

The PSS server starts streaming the switched content streams to the UE.

The PSS Adapter should send a SIP INFO message including the Info Package (Content Reporting) to the SCF according to clause 8.2.5.2.1.

8.2.5.4.2 Procedures at the UE

To switch content of the PSS streaming session the UE shall send an RTSP PLAY to request the new SDP as defined in TS 26.234 [8].

8.2.5.4.3 Procedures at the IM CN Subsystem

The IM CN subsystem handles the SIP dialog as defined in 3GPP TS 23.228 [6].

8.2.5.4.4 Procedures at the SCF

Upon receipt of a SIP INFO message the SCF shall send a SIP 200 OK to the PSS adapter.

8.2.5.4.5 Procedures at the PSS Adapter

Upon identification of a successful content switch, the PSS Adapter starts the content switching timer for a particular session. If another content switch occurs during the life of the timer, the timer is restarted. If the session is terminated during the life of the timer, the timer is stopped. After timer expiration, the PSS Adapter should send a SIP INFO

message with the Info Package (Content Reporting) to the SCF. The Content Reporting Info Package shall contain an XML document as defined in Annex D and Annex E.

- ImsPssMbmsCommand shall be set to "PssSwitch".
- ContentID is set to the RTSP URI of the new content.
- DateTime is set to the current date and time.

The Content-Type header shall be set to "application/3gpp-ims-pss-mbms-command+xml".

The PSS Adapter sends the RTSP 200 OK message to UE containing the SDP for the new stream.

8.2.5.4.6 Procedures at the PSS Server

The PSS Server behaves as defined in 3GPP TS 26.234 [8] clause 5.5.4.

8.2.5.5 PSS Content switching with unavailable SDP, change of media component and/or bandwidth

8.2.5.5.1 General description

In this case, the UE does not have the SDP for the streams it intends to switch to. And the new content has different media and/or bandwidth characteristics.

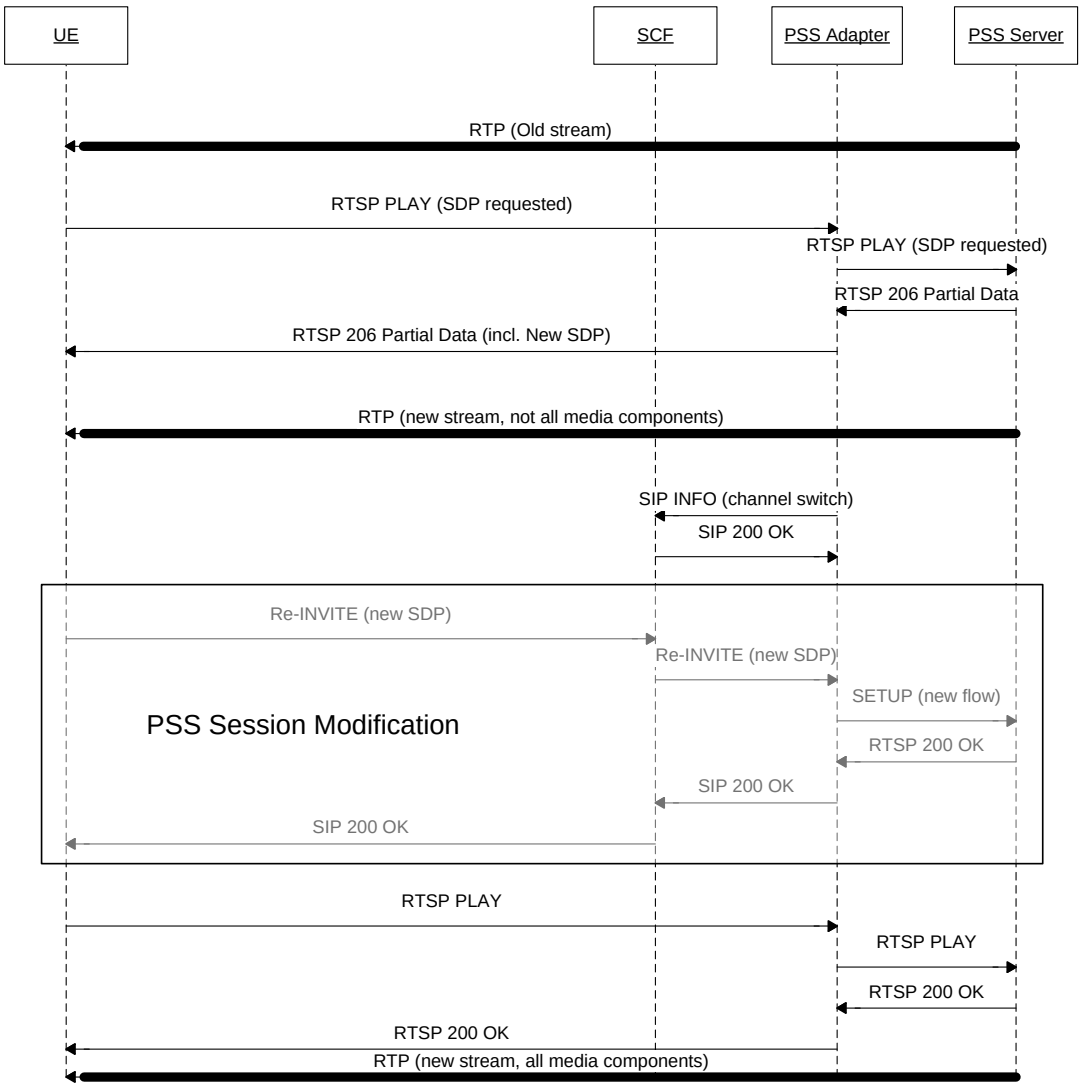

Figure 13: IMS PSS Content switching without available SDP, change of media component and/or bandwidth

The UE sends a PLAY request to the PSS adapter indicating that it needs the SDP for the new streams. The PSS Adapter sends the RTSP PLAY message to the PSS Server.. If the UE receives a "206 Partial Data" success status code, then the UE changes the number of media components and/or bandwidth by sending a RE-INVITE message with the new SDP file, as described in clause 8.2.5.1.

8.2.5.5.2 Procedures at the UE

If the UE receives a "206 Partial Data" success status code, then the UE changes the number of media components by sending a re-INVITE message with the new SDP file.

8.2.5.5.3 Procedures at the IM CN Subsystem

The IM CN subsystem handles the SIP dialog as defined in 3GPP TS 23.228 [6].

8.2.5.5.4 Procedures at the SCF

Upon receipt of a SIP INFO message the SCF shall send a SIP 200 OK to the PSS adapter.

8.2.5.5.5 Procedures at the PSS Adapter

Upon identification of a successful content switch, the PSS Adapter starts the content switching timer for a particular session. If another content switch occurs during the life of the timer, the timer is restarted. If the session is terminated during the life of the timer, the timer is stopped. After timer expiration, the PSS Adapter should send a SIP INFO message with the Info Package (Content Reporting) to the SCF. The Content Reporting Info Package shall contain an XML document as defined in Annex D and Annex E.

- ImsPssMbmsCommand shall be set to "PssSwitch".
- ContentID is set to the RTSP URI of the new content.
- DateTime is set to the current date and time.

The Content-Type header shall be set to "application/3gpp-ims-pss-mbms-command+xml".

When receiving the SIP RE-INVITE message from the SCF, if a new media component needs to be added, the PSS adapter shall send the RTSP SET-UP to the PSS server, indicating the new media component that needs to be added.

8.2.5.5.6 Procedures at the PSS Server

The PSS Server reacts as defined in 3GPP TS 26.234 [8] clause 5.5.4.

8.2.5.6 PSS content switching reporting update

8.2.5.6.1 General Description

If the SCF does not want to receive content switching information anymore or would like to start content switching reporting, the SCF should send a SIP UPDATE message to the PSS adapter with the Recv-Info header set appropriately.

Note: In this case, the SCF is acting as B2BUA.

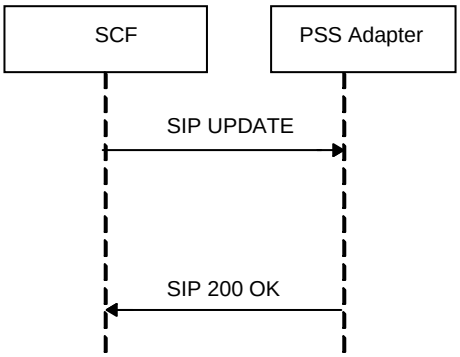

Figure 13a: PSS content switching reporting update

8.2.5.6.2 Procedures at the PSS adapter

After receiving a SIP UPDATE message from the SCF, the PSS adapter shall dependent on the Recv-Info header, stop or start the content switching reporting.

8.2.5.6.3 Procedures at the SCF

If the SCF does not want to receive content switching information anymore, it should send a SIP UPDATE message with the Recv-Info header set to nil to the PSS adapter.

If the SCF decides to start content switching reports, the SCF should send a SIP UPDATE message with the Recv-Info header set to content info to the PSS adapter.

8.2.5.7 PSS Content Report Configuration

8.2.5.7.1 General Description

During service consumption with PSS session, the SCF may request the PSS Adapter to re-config the content report behaviours e.g. report timer, etc. The following clauses describe how the SCF can reconfigure a PSS Adapter.

According to sub-clause 8.2.3, a PSS streaming session was initiated and the PSS Adapter has indicated his willing to accept Content Reporting Configuration Info-Package.

In order to send the updated content report configuration information, the SCF issues a SIP INFO request to the PSS Adapter, with the new configuration information.

After receiving SIP INFO request, the PSS Adapter responses with SIP 200 OK and config itself with the new configuration information.

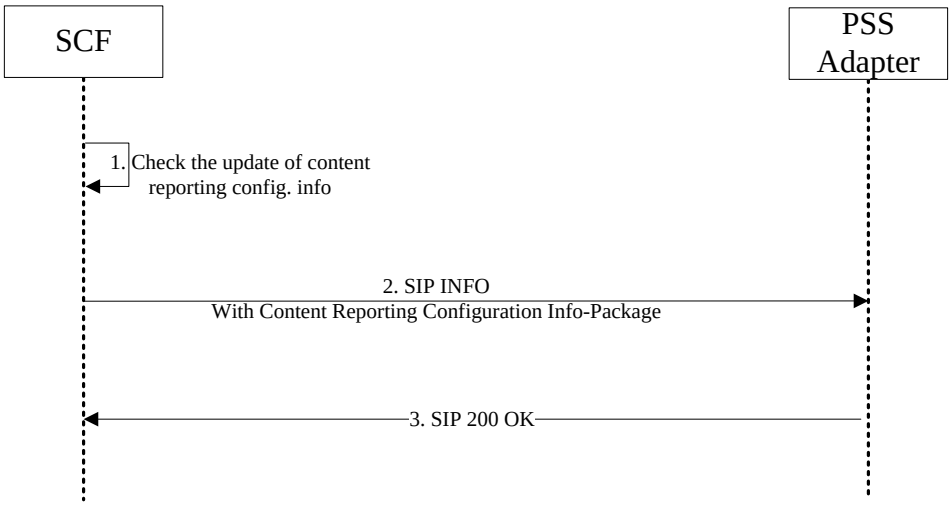

Figure 13b: Content Report Configuration Information Delivery to PSS Adapter

8.2.5.7.2 Procedures in SCF

Whenever the SCF wants to re-configure a PSS Adapter, the SCF shall issue a SIP INFO request to the PSS Adapter with the Info Package (Content Report Configuration). The Content Reporting Configuration Package shall contain an XML document as defined in Annex K.

- ReportTimer shall be set to the time value (in seconds) of the updated report timer;

8.2.5.7.3 Procedures at the IM CN Subsystem

The IM CN subsystem handles the SIP dialog as defined in 3GPP TS 23.228 [6].

8.2.5.7.4 Procedures in PSS Adapter

Upon receipt of a SIP INFO message the PSS Adapter shall send a SIP 200 OK to the SCF.

The PSS Adapter shall then parse the XML file in the message body, according the schema defined in Annex X. Following that the PSS Adapter shall configure itself according to the XML file:

- If the “ReportTimer” is different from the timer which is set for content report, then reset the timer with the value “ReportTimer”.

8.2.6 PSS Streaming Session Teardown

8.2.6.0 Introduction

Assuming the streaming session is established, the session can be terminated either by the UE or by the network. For the network-initiated PSS streaming session teardown, either the SCF or the PSS adapter can initiate the procedure.

8.2.6.1 General Description

8.2.6.1.1 UE-initiated PSS streaming session teardown

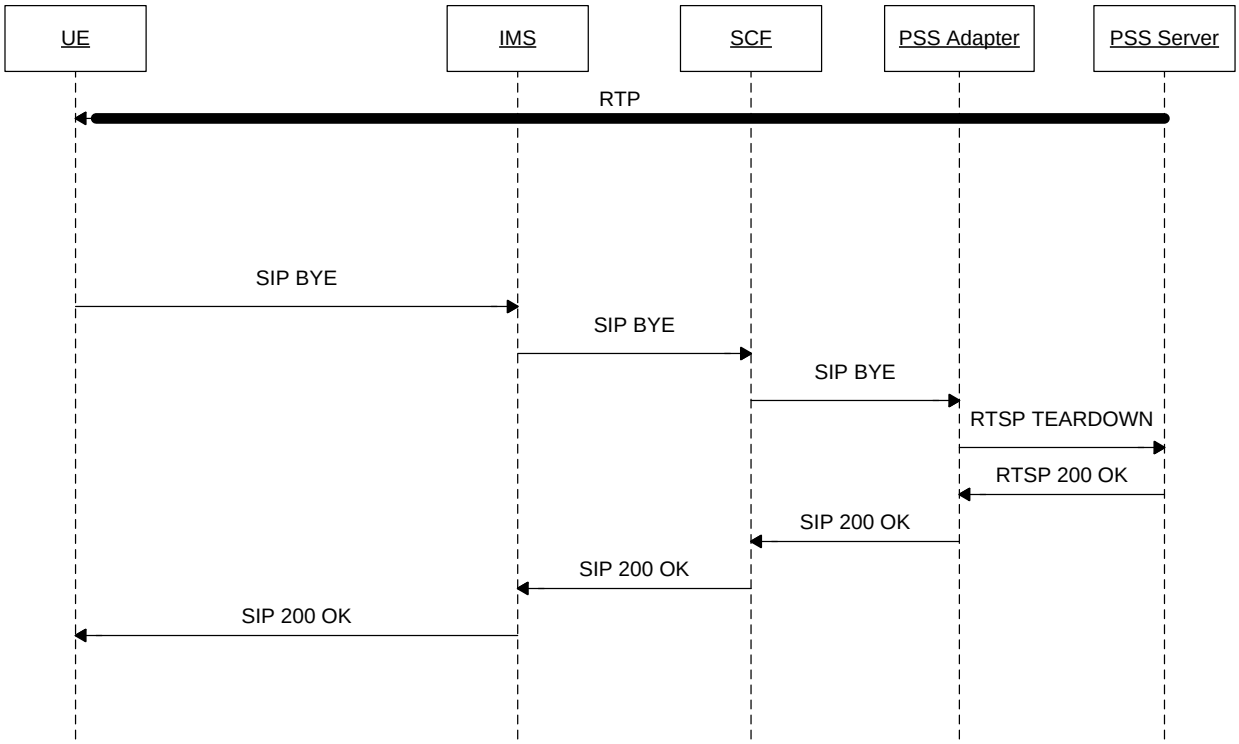

Figure 14a: UE-initiated IMS PSS Session termination

Here the case of UE termination is described. The following steps are carried out:

1) Note that the PSS Adapter should maintain the RTSP session to the PSS Server until after step 5.

2) The UE sends a SIP BYE message.

3) The IMS CN subsystem forwards the SIP BYE message to the SCF.

4) The SCF sends the SIP BYE message to the PSS adapter.

5) The PSS adapter sends a RTSP TEARDOWN to the PSS server.

6) In case the PSS Server is transmitting RTP data it stops sending RTP data for this session. The PSS server sends a RTSP 200 OK to the PSS adapter.

7) The PSS adapter sends a SIP 200 OK to the UE via SCF and IMS CN subsystem.

8.2.6.1.2 SCF-initiated PSS streaming session teardown

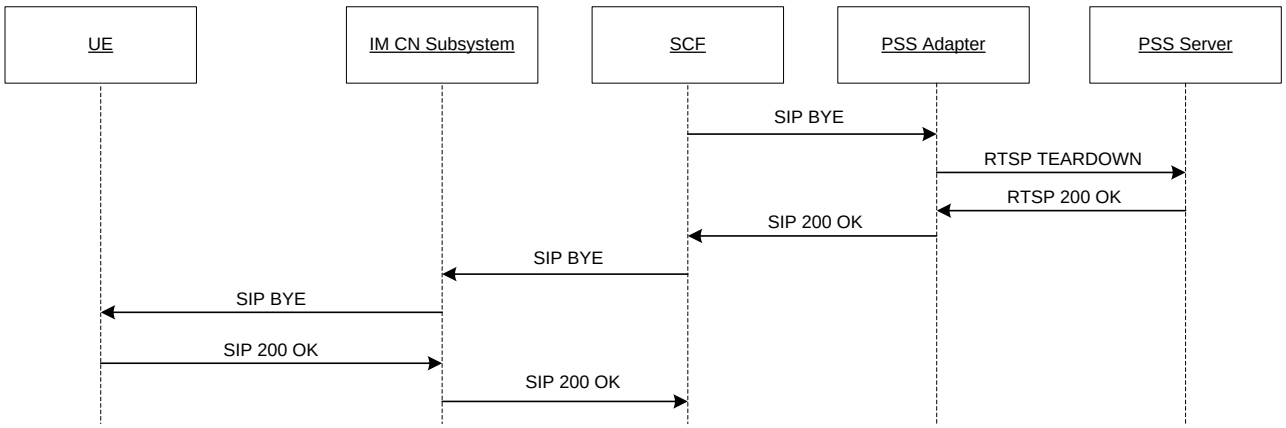

Figure 14b: SCF-initiated IMS PSS Session termination

Here the case of the SCF-initiated teardown procedure is described. The following steps are carried out:

1) The SCF sends a SIP BYE to the PSS adapter.
2) The PSS adapter sends the RTSP TEARDOWN message to the PSS server.
3) The PSS server sends the RTSP 200 OK message to the PSS adapter.
4) The PSS adapter sends the SIP 200 OK message to the SCF.
5) Upon receipt of the SIP 200 OK, the SCF sends the SIP BYE message to the IM CN subsystem.
6) The IM CN Subsystem forwards the SIP BYE message to the UE.
7) The UE sends a SIP 200 OK message to the IM CN Subsystem.
8) The IM CN Subsystem forwards the SIP 200 OK to the SCF.

8.2.6.1.3 PSS adapter-initiated PSS streaming session teardown

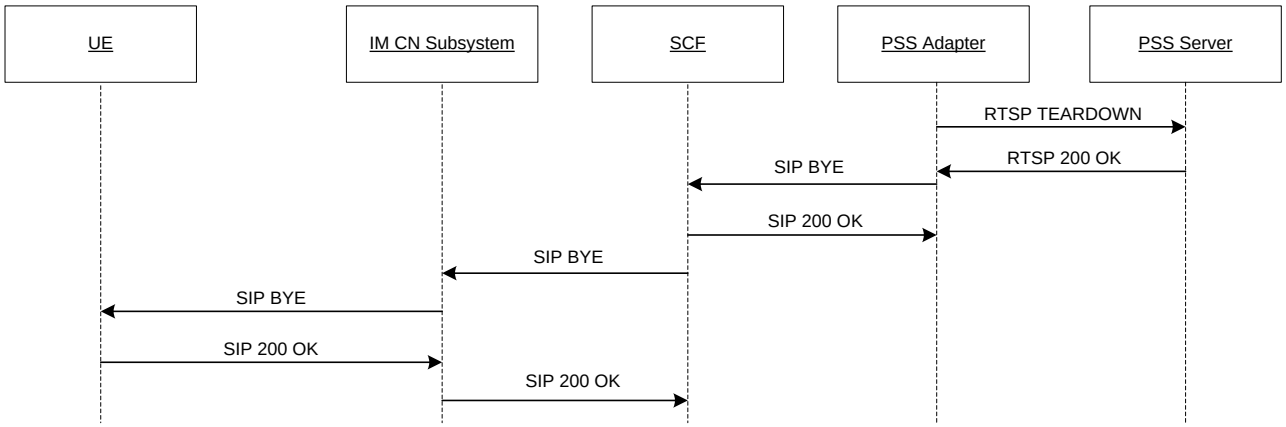

Figure 14c: PSS adapter-initiated IMS PSS Session termination

Here the case of the SCF-initiated teardown procedure is described. The following steps are carried out:

1) The PSS adapter sends the RTSP TEARDOWN to the PSS server.
2) The PSS server sends the RTSP 200 OK to the PSS adapter.

3) The PSS adapter sends the SIP BYE message to the SCF.

4) The SCF sends the SIP 200 OK message to the PSS adapter.

5) The SCF sends the SIP BYE message to the IM CN Subsystem.

6) The IM CN Subsystem forwards the SIP BYE message to the UE.

7) The UE sends a SIP 200 OK message to the IM CN Subsystem.

8) The IM CN Subsystem forwards the SIP 200 OK to the SCF.

8.2.6.2 Procedures at the UE

8.2.6.2.1 UE-initiated PSS streaming session teardown

To teardown the PSS streaming session the UE shall close the TCP connection for RTSP between UE and PSS Adapter, if existing. Further, the UE shall send a SIP BYE to the SCF.

8.2.6.2.2 Network-initiated PSS streaming session teardown

Upon receipt of the SIP BYE message, the UE shall the SIP 200 OK message to the SCF. The UE procedes to release the associated resources held for the PSS session.

8.2.6.3 Procedures at the IM CN Subsystem

The IM CN subsystem handles the SIP dialog as defined in 3GPP TS 23.228 [6].

8.2.6.4 Procedures at the SCF

8.2.6.4.1 UE-initiated PSS streaming session teardown

Upon receipt of a SIP BYE message the SCF shall forward it to the PSS adapter.

8.2.6.4.2 SCF-initiated PSS streaming session teardown

The SCF initiates the PSS streaming session teardown by sending a SIP BYE message to the PSS adapter. Upon receipt of the SIP 200 OK from the PSS adapter, the SCF shall send a SIP BYE message to the UE.

8.2.6.4.3 PSS adapter-initiated PSS streaming session teardown

Upon receipt of the SIP BYE message received from the PSS adapter, the SCF sends the SIP 200 OK message to the PSS adapter. Then the SCF forwards the SIP BYE message to the UE.

8.2.6.5 Procedures at the PSS Adapter

8.2.6.5.1 UE-initiated PSS streaming session teardown

Upon receipt of a SIP BYE message from the SCF the PSS adapter shall send a RTSP TEARDOWN message to the PSS Server.

Upon receipt of a RTSP 200 OK message from the PSS server, the PSS adapter shall send a SIP 200 OK message to the SCF.

The PSS Adapter shall not close the RTSP session to the PSS Server on receipt of a TCP close, but waits until it has received the SIP BYE message in step 4 of clause 8.2.6.1.1.

8.2.6.5.2 SCF-initiated PSS streaming session teardown

Upon receipt of the SIP BYE message, the PSS adapter sends the RTSP TEARDOWN message to the PSS server. Upon receipt of the RTSP 200 OK message from the PSS server, the PSS adapter sends the SIP 200 OK to the SCF.

8.2.6.5.3 PSS adapter-initiated PSS streaming session teardown

The PSS adapter sends the RTSP TEARDOWN to the PSS server. Upon receipt of the RTSP 200 OK, the PSS adapter sends the SIP BYE messge to the SCF.

8.2.6.6 Procedures at the PSS Server

Upon receipt of a RTSP TEARDOWN from the PSS adapter, the PSS server shall stop still on-going RTP transmissions and send a RTSP 200 OK message to the PSS adapter.

8.2.7 Supported procedures

Clause 8.2 specifies IMS initiated and controlled PSS streaming sessions. Protocols and procedures as defined in 3GPP TS 26.234 [8] are supported including

- Fast content switching and start-up (clause 5.5). In the case of fast content start-up, the pipelining takes place between the PSS adapter and the PSS server.
- Time-shifting support (clause 5.6)
- RTP and RTCP extensions (clause 6.2.3)
- Adaptation of continuous media (clause 10)
- Quality of Experience reporting (clause 11).

8.3 MBMS Streaming

8.3.1 MBMS Media codecs and formats

MBMS Media codecs and formats defined in 3GPP TS 26.346 [11] are applicable to the present document for IMS initiated and controlled MBMS User service.

8.3.2 Procedure for providing missing parameters

8.3.2.1 Procedures at the UE

If the UE does not have the all the information it needs to form an SDP offer, the UE shall send a SIP OPTIONS message.

The "Request-URI" is related to the MBMS service that the user wants to activate. The "Request-URI" shall be composed of a user and domain part as defined as follows:

- The user part contains the serviceId. The serviceId shall be globalServiceID defined in [27] or serviceId defined in [11], which is retrieved from service selection information.
- The domain part is the Service Provider domain name, obtained from SSF.

The TO header shall contain the same URI as in the "Request-URI" parameter.

The FROM header shall indicate the public user identity of the user.

Upon reception of the 200 OK including service access information encapsulated in multipart/MIME, the UE may initiate MBMS session as described in clause 8.3.3.

8.3.2.2 Procedures at the SCF

When receiving the SIP OPTIONS message, the SCF shall examine the serviceId present in the user-part of the TO header and lookup the requested User Service Description information.

The SCF shall answer with the user service description information of the content delivery channel (encapsulated in multipart/MIME) as requested by the serviceId.

8.3.3 MBMS Streaming Session initiation

8.3.3.1 General description

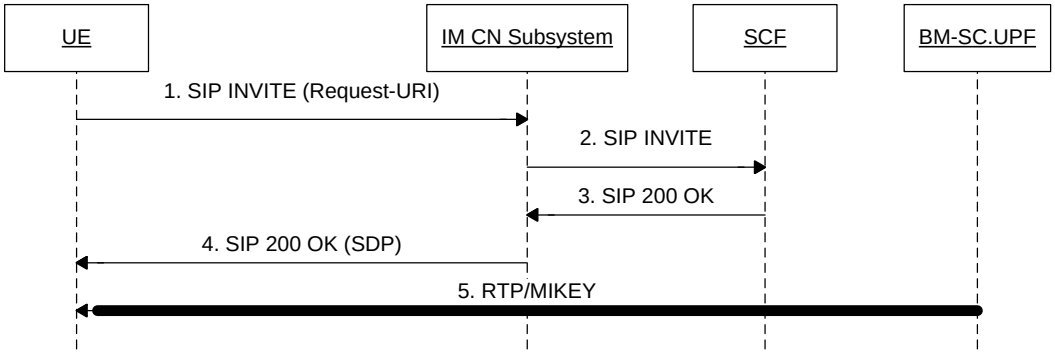

Figure 15: MBMS Streaming Session Initiation

It is assumed that the UE has already received the MBMS USD containing the SDP and associated fragments for the service from the SSF before initiating the MBMS session.

Step 1, 2: UE initiates a SIP INVITE message to SCF, indicating which MBMS Streaming User Service the user has chosen.

Step 3, 4: SCF responds UE with a SIP 200 OK message when the SIP INVITE is successfully handled. The SIP 200 OK contains an SDP files containing the Multicast address of the service. The UE then activates the MBMS bearers either using the MBMS Broadcast Service Activation procedure [4] or the MBMS Multicast Service Activation Procedure [4].

Step 5: The UE can start receiving the MBMS Streaming session data when transmitted by the BM-SC.UPF.

The construction of the SDP is not affected by the use of MBMS stream bundling, see section 8.2.2 of [11], nor are any of the procedures.

8.3.3.2 Procedures at the UE

The UE shall support the procedures specified in TS 24 229 [7] for originating sessions.

The UE shall generate an initial INVITE request:

- The Request-URI in the INVITE request shall be the well known PSI (Public Service Identifier) of the MBMS Service, i.e. Live Stream@<Domain name>.
- The To header shall contain the same URI as in the Request-URI.
- The From header shall indicate the public user identity of the user.
- The Recv-Info header shall be set to "ContentReportConfig" [42].

An SDP offer shall be included in the request. The SDP offer shall be done in accordance with the parameters received during UE service selection procedure and with media capabilities and required bandwidth available for the MBMS session. The SDP offer corresponds to the MBMS Streaming Session. See 3GPP TS 26.346 [11], clause 8.3.1. . The SDP offer at media level shall include the following elements:

- The m-line(s) shall be set to the media parameters retrieved via service selection procedures for the requested MBMS service.
- The c-line(s) shall be set according to the multicast address retrieved via service selection procedures for the requested MBMS service.
- An a=mbms_service:MBMS_ServiceId line to indicate the MBMS service which the UE intends to initiate first. The MBMS_ServiceId shall be globalServiceID defined in [27] or serviceId defined in [11], which is retrieved from service selection information.
- The a-attribute shall be set to the value of "recvonly".

Once the UE receives the SIP response, the UE shall examine the media parameters in the received SDP, and initiate the MBMS channel according to the a=mbms_service line. It can activate the corresponding MBMS User Service as described in the USDs. MBMS User Service reception initiation may correspond to the MBMS Broadcast Mode activations as described in 3GPP TS 23.246 [4], clause 8.12 or the MBMS Multicast Mode activation procedure as described in 3GPP TS 23.246 [4], clause 8.2.

The received SDP may contain an a=suggestedPresentationOffset:value line. The value of suggestedPresentationOffset specifies a delay offset from the time when the first octet of a data unit was generated at the sender that is suggested to be used for presentation of the first octet of the data unit. For a received RTP packet, if the wall-clock time corresponding to the RTP timestamp carried in the RTP packet is *T*, a UE may present the data contained in the first octet of the associated RTP packet to the user at *T*+ *suggestedPresentationOffset* in terms of the wall-clock time if synchronized playout with other UEs adhering to the same rule is desired.

8.3.3.3 Procedures at the IM CN Subsystem

The IM CN subsystem handles the SIP dialog as defined in 3GPP TS 23.228 [6]. The corresponding PCC procedures are performed as described in clause 9.

8.3.3.4 Procedures at the SCF

The SCF shall support the procedures specified in TS 24.229 [7] applicable to an AS acting as a terminating UA.

Upon receipt of SIP INVITE request, the SCF shall perform service authorization procedures to check the service rights of requested MBMS service according to the user subscription information, See clause 10.4.

The SCF shall examine the SDP parameters in the SDP offer.

- It shall examine the a=mbms_service parameter. This parameter contains the channel the UE intends to join. If the mbms_service parameter does not point to a channel that the UE is allowed to join the SCF shall not accept the offer and shall answer with a 403 error code.
- It shall examine the c-line(s) to determine that it is a multicast session. It may also check that it corresponds to the mbms_service parameter. If not, the SCF shall answer with a 403 error code.

If the SDP parameters are examined successfully, the SCF shall answer with a SIP 200 OK, indicating the SDP answer as follows:

- The c-lines and m-lines shall be identical to ones indicated in the SDP offer.
- It shall include an a=sendonly attribute.
- It may include an a= suggestedPresentationOffset:value line. The value of suggestedPresentationOffset provides a mapping of the presentation time of each data unit to the wall-clock time to enable synchronized playout of the UEs adhering to the same rule.

The SIP 200 OK shall indicate the supported Info Packages in the Recv-Info header (Content Reporting) [42].

8.3.3.5 Procedures at the BMSC.UPF

The MBMS session is already ongoing at the BMSC.UPF. No specific action is required.

8.3.4 MBMS content switching

8.3.4.1 General Description

It is assumed that MBMS streaming reception is already active and a stream is delivered to the UE via MBMS. In case of MBMS content switching, the UE tunes into a new content channel e.g. in case of MBMS multicast mode the UE leaves a multicast channel and joins another one.

The UE should sent a SIP INFO Message with the included Info Package (Content Reporting) to inform the SCF about which channel is being received unless the SCF prohibits it. A timer is started with a preconfigured value with default value of 10 seconds, when the channel switch is executed. After timer expiration the SIP INFO message is sent.

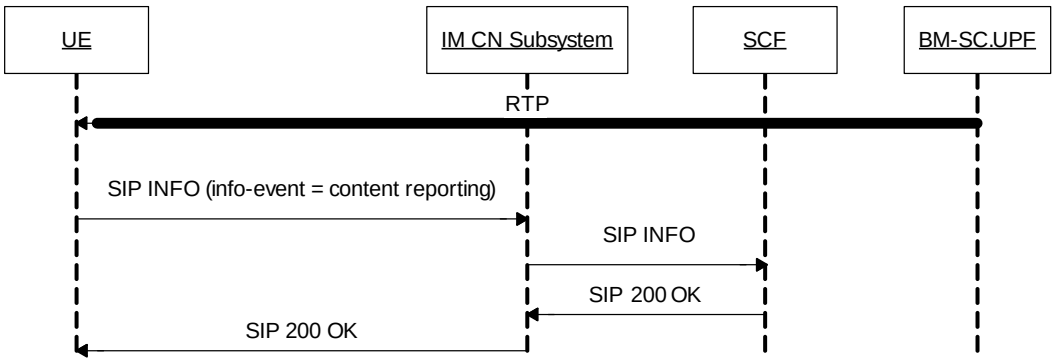

Figure 16: MBMS content switching reporting

The UE sends content switching information to the SCF.

The content switching information may include the serviceId after switching. The SCF may utilize the content switching information for statistical or charging purposes etc.

If the SCF does not want to receive content switching information anymore or would like to start content switching reporting, the SCF should send a SIP UPDATE message to the UE with the Recv-Info header set appropriately.

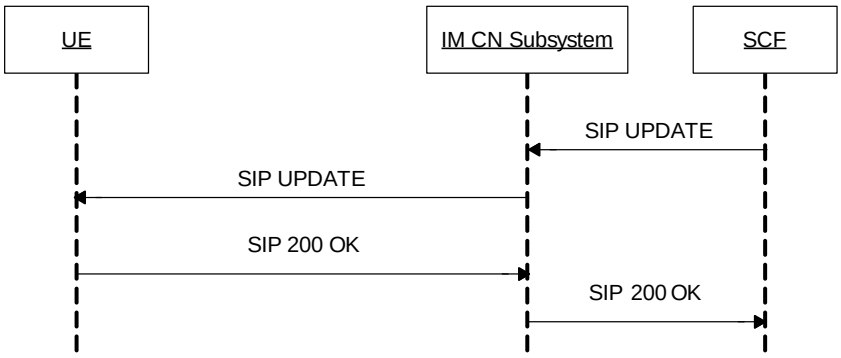

Figure 16a: MBMS content switching reporting update

8.3.4.2 Procedures at the UE

The UE performs MBMS content switching according to the deactivation/activation procedures defined in [4].

Upon identification of a successful content switch, the UE starts the content switching timer for a particular session. If another content switch occurs during the life of the timer, the timer is restarted. If the session is terminated during the life of the timer, the timer is stopped. After timer expiration, the UE should send a SIP INFO message with the Info Package (Content Reporting) to the SCF. The Content Reporting Info Package shall contain an XML document as defined in Annex D and Annex F.

- ImsPssMbmsCommand shall be set to "MbmsSwitch";
- ServiceId shall be set to the value of the new channel. If the OMA BCAST Service Guide [27] is used, this shall be set to Global Service ID, otherwise shall be set to the MBMS User Service Description serviceId.
- ProgrammeId may be present and if present shall be set to the identifier of the current programme of the new channel. If the OMA BCAST Service Guide [27] is used, this shall be set to service Name.
- DateTime shall be set to the date & time of the channel switch.

The Content-Type header shall be set to "application/3gpp-ims-pss-mbms-command +xml".

After receiving a SIP UPDATE message from the SCF, the UE shall dependent on the Recv-Info header, stop or start the content switching reporting.

8.3.4.2 Procedures at the IM CN Subsystem

The IM CN subsystem handles the SIP dialog as defined in 3GPP TS 23.228 [6].

8.3.4.3 Procedures at the SCF

Upon receipt of a SIP INFO message the SCF shall send a SIP 200 OK to the UE.

If the SCF does not want to receive content switching information anymore, it should send a SIP UPDATE message with the Recv-Info header set to nil.

If the SCF decides to start content switching reports, the SCF should send a SIP UPDATE message with the Recv-Info header set to Content Reporting to the UE.

8.3.4.4 Procedures at the BMSC.UPF

The BMSC.UPF transmits the RTP flows, and is not involved in the reporting of content switching information.

8.3.5 MBMS Streaming Session Teardown

8.3.5.1 General Description

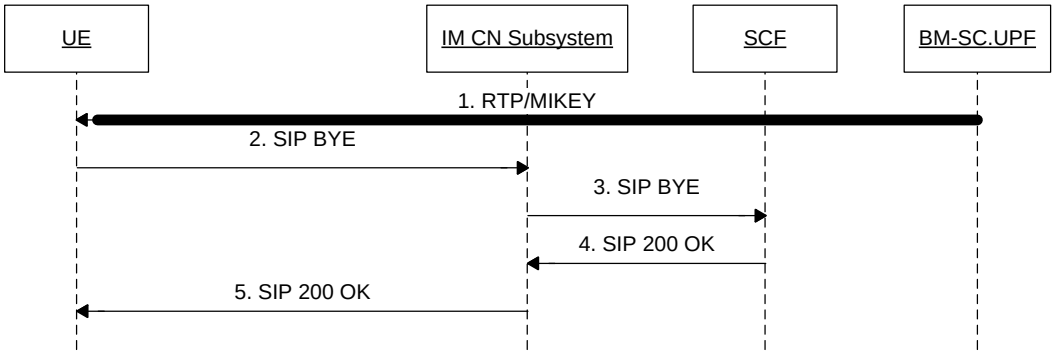

Figure 17: MBMS Streaming Session Termination

Step 1: UE receives Streaming content from the BM-SC.UPF.

Step 2, 3: UE initiates a SIP BYE message to SCF, indicating which MBMS Streaming session to close.

Step 4, 5: SCF responds UE with a SIP 200 OK message when the SIP BYE is successfully handled and session terminated. At this stage, the UE can stop receiving the MBMS Streaming session.

The UE may deactivate the according MBMS Bearer Service during steps 2 to 5 or after step 5. The deactivation is either according to the MBMS Broadcast Service deactivation (3GPP TS 23.246 [4]) or the MBMS Multicast Mode deactivation procedure (3GPP TS 23.246 [4]).

8.3.5.2 Procedures at the UE

The UE shall send a SIP BYE to the SCF.

The UE may deactivate the according MBMS Bearer Service during steps 2 to 5 or after step 5 of clause 8.3.5.1. The deactivation is either according to the MBMS Broadcast Service deactivation (3GPP TS 23.246 [4]) or the MBMS Multicast Mode deactivation procedure (3GPP TS 23.246 [4]).

8.3.5.3 Procedures at the IM CN Subsystem

The IM CN subsystem handles the SIP dialog as defined in 3GPP TS 23.228 [6].

8.3.5.4 Procedures at the SCF

The SCF responds to the UE with a SIP 200 OK message after handling of the SIP BYE message.

8.3.5.5 Procedures at the BMSC.UPF

The BMSC.UPF is acting as described in 3GPP TS 23.246 [4].

8.3.6 MBMS Content Report Configuration

8.3.6.1 General Description

During service consumption with MBMS session, the SCF may request the UE to re-config the content report behaviours e.g. report timer, etc. The following clauses describe how the SCF can reconfigure a UE.

According to sub-clause 8.3.3, a MBMS streaming session was initiated and the UE has indicated his willing to accept Content Reporting Configuration Info-Package.

In order to send the updated content report configuration information, the SCF issues a SIP INFO request to the UE, with the new configuration information.

After receiving SIP INFO request, the UE responses with SIP 200 OK and config itself with the new configuration information.

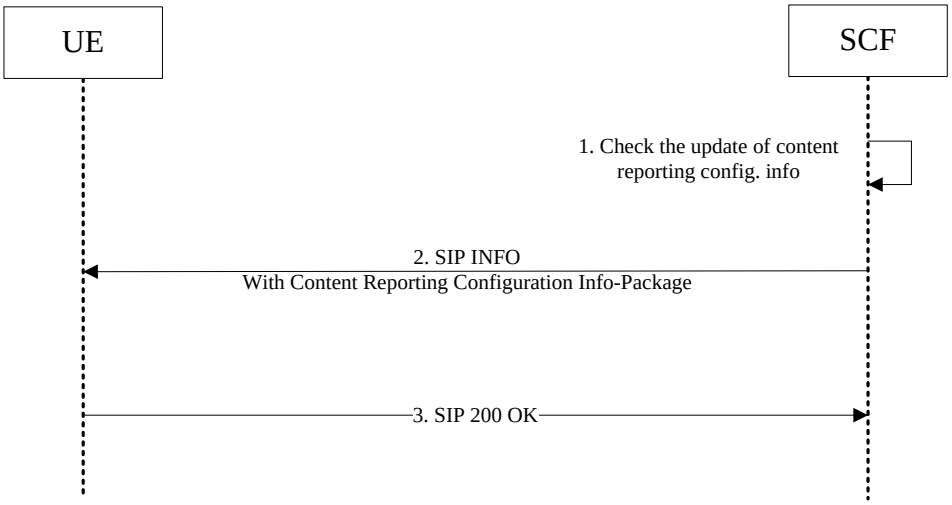

Figure 17a: Content Report Configuration Information Delivery to UE

8.3.6.2 Procedures in SCF

Whenever the SCF wants to re-configure an UE, the SCF shall issue a SIP INFO request to the UE with the Info Package (Content Report Configuration). The Content Reporting Configuration Package shall contain an XML document as defined in Annex K.

- ReportTimer shall be set to the time value (in seconds) of the updated report timer;

The Content-Type header shall be set to"application/3gpp-ims-pss-mbms-contentReportConfig+xml".

8.3.6.3 Procedures at the IM CN Subsystem

The IM CN subsystem handles the SIP dialog as defined in 3GPP TS 23.228 [6].

8.3.6.4 Procedures in UE

Upon receipt of a SIP INFO message the UE shall send a SIP 200 OK to the SCF.

The UE shall then parse the XML file in the message body, according the schema defined in Annex X. Following that the UE shall configure itself according to the XML file:

- If the “ReportTimer” is different from the timer which is set for content report, then reset the timer with the value “ReportTimer”.

8.4 Combined PSS and MBMS Streaming

8.4.1 Introduction

Combined PSS and MBMS streaming is important to ensure a consistent user experience. An UE may switch between one and the other depending on certain circumstances, e.g. changing between a PSS and MBMS coverage etc., or triggered by specific user action, e.g. trick play, etc.

It is assumed that the UE has an already established PSS or MBMS session and is capable of switching to the other delivery method.

Clause 8.4.2 gives the different cases and scenarios for switching between PSS and MBMS .

8.4.2 PSS - MBMS Switching

In the case of hybrid PSS-MBMS switching, it is distinguished between:

(a) switching from MBMS streaming to PSS streaming:

- Without channel change e.g. when a user is viewing an MBMS user service and moves out of MBMS coverage, or the user initiates trick play mode action, etc.
- With channel change e.g. changing to a channel only available on PSS.

(b) switching from PSS streaming to MBMS streaming:

- Without channel change e.g. the user returns back from trick play mode to a normal MBMS user service, etc.
- With channel change e.g. changing to a channel available on MBMS.

8.4.3 Switching from MBMS streaming to PSS streaming

According to clause 8.3.3 an MBMS streaming session was initiated and the UE is receiving the MBMS session from the BM-SC.UPF.

In order to switch from MBMS to unicast reception of a stream via PSS e.g. for allowing trick play mode, a SIP Re-INVITE is issued by the UE. An SDP offer and Request-URI shall be included according to clause 8.2.3.

After receiving the 200 OK, the UE leaves the multicast channel and starts playback.

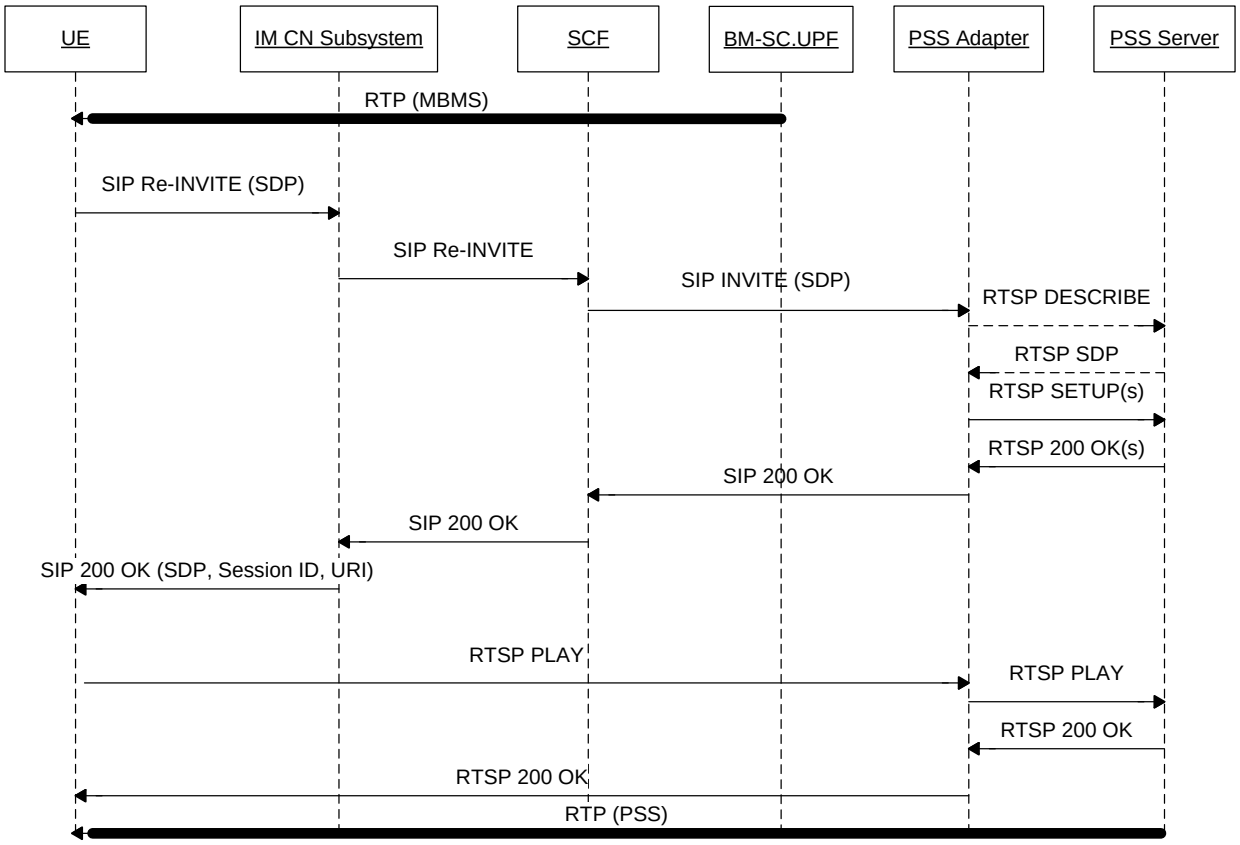

Figure 18: IMS Hybrid PSS-MBMS-to-PSS content switching

8.4.3.1 Combined Session establishment

8.4.3.1.1 Procedures at the UE

When the UE switches from an MBMS User Service to a PSS user service, the UE sends a session modification request, i.e. SIP re-INVITE, with an SDP Offer and Request-URI.

The Request-URI is related to the PSS session that the user wishes to activate. The Request-URI shall be composed of a user and domain part as defined in clause 8.2.3.2.

The SDP offer shall include previously negotiated media descriptions with the port set to zero and two or more additional media descriptions: one for media control channel (i.e. RTSP control channel) and one or more for media delivery channel (i.e. delivery channel for the unicast streams).

The RTSP control media descriptor shall follow TS 24.229 [7]. The SDP offer for media delivery shall be identical to the previous SDP offer done for broadcast in term of codecs and transport protocol.

The UE may record the media offset for the MBMS user service.

When receiving SIP 200 OK response, the UE shall setup a media control channel with the PSS Adapter, and setup a media delivery channel with PSS Server according to the SDP answer. The UE shall send RTSP PLAY message to start the delivery of the media streams.

8.4.3.1.2 Procedures at the IM CN Subsystem

The IM CN Subsystem handles the SIP dialog as defined in 3GPP TS 23.228 [6].

8.4.3.1.3 Procedures at the SCF

When receiving the SIP modification request, the SCF will determine if the programme currently broadcasted has MBMS to PSS switching support.

NOTE: The SCF may determine whether the SIP modification request is for MBMS to PSS switching according to the addition of the RTSP media control channel or unicast media delivery channel in the SDP offer.

If MBMS to PSS switching is not available for the UE, the session modification is rejected and the old MBMS session (along with the previous reserved resources) is maintained.

If MBMS to PSS switching is available for the UE, the SCF acting as a B2BUA, shall:

- Handle the SIP modification request as defined in clause 8.2.3.4;
- If the Request-URI contains a content identifier in the user part and a domain name in the domain part, the SCF shall select a suitable PSS adapter and generate a SIP INVITE request to the selected PSS adapter. The To header of the SIP INVITE request shall contain the same content identifier as in the Request-URI of the SIP modification request received from the UE;
- Send the SIP INVITE request to the PSS Adapter with the SDP parameters for the content control channel of RTSP, and for the media delivery channel of unicast streams. The SCF shall precise the content identifier in the user part of the Request-URI.

When sending the SIP INVITE message to PSS Adapter, SCF shall follow the procedures defined in TS 24.229 [7] concerning the AS acting as B2BUA.

8.4.3.1.4 Procedures at the PSS Adapter

When receiving a SIP INVITE request from SCF, as well as receiving RTSP 200 OK message from PSS Server, the PSS Adapter shall conform to clause 8.2.3.5.

Prior to replying, the PSS Adapter uses real time to calculate the media offset for the MBMS user service when replying with the offered media.

When receiving RTSP message from UE, the PSS Adapter shall conform to clause 8.2.4.2.

8.4.3.1.5 Procedures at the PSS Server

The procedures at the PSS Server shall conform to those defined in 3GPP TS 26.234 [8].

8.4.3.2 Combined session teardown

The combined session teardown shall conform to clause 8.2.6.

8.4.4 Switching from PSS streaming to MBMS streaming

According to clause 8.2.2 a PSS streaming session was initiated and the UE is receiving the PSS session from the PSS server.

In order to switch from PSS to MBMS reception of a stream, a SIP Re-INVITE is issued by the UE and sent to the SCF. The SCF shall act as a B2BUA, and send a SIP BYE messge to PSS Adapter to terminate the SIP session between them. The PSS Adapter shall send a RTSP TEARDOWN messag to PSS Server to release the RTSP session.

Once the UE receives the SIP 200 OK response, it can activate the corresponding MBMS User Service as described in the SDP as defined in clause 8.3.3.2.

After switching to MBMS reception, the PSS session shall be terminated.

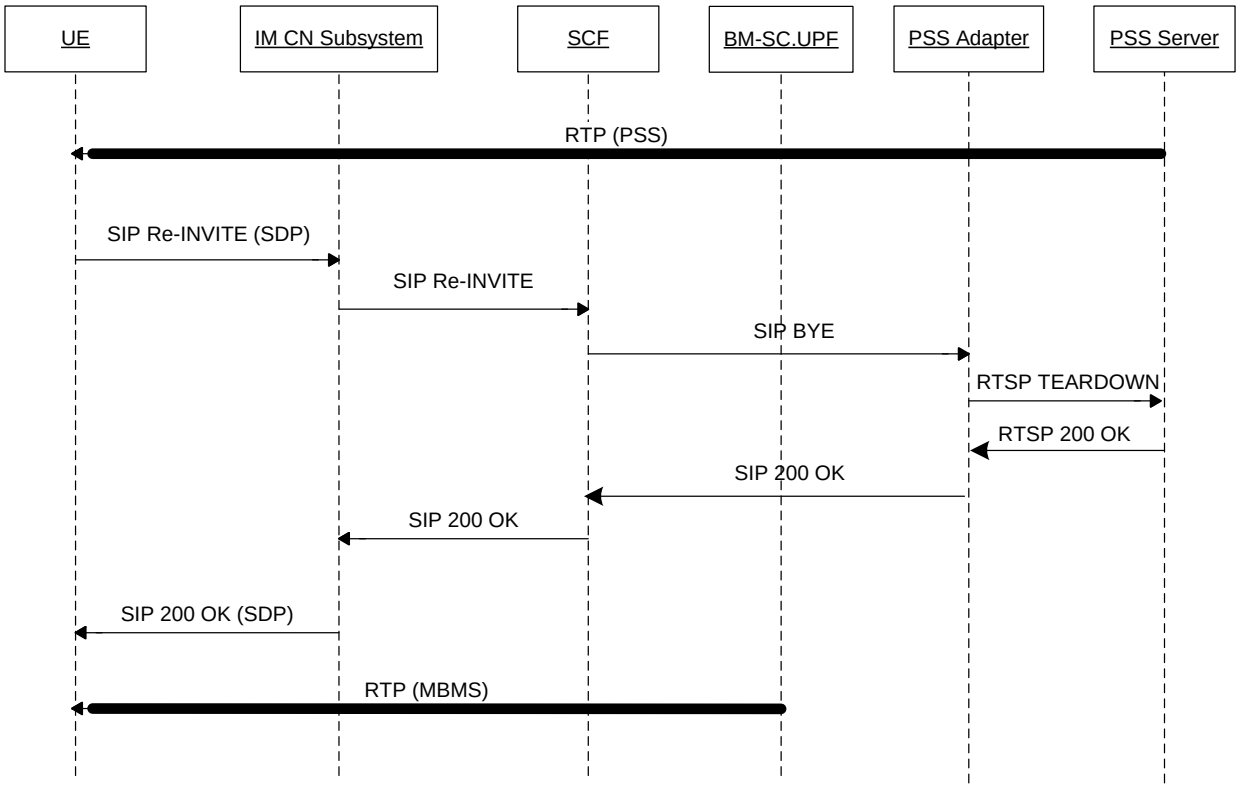

Figure 19: IMS PSS-to-MBMS content switching

8.4.4.1 Combined Session establishment

8.4.4.1.1 Procedures at the UE

When the UE switches from a PSS User Service to an MBMS user service, the UE sends a session modification request, i.e. SIP re-INVITE, an SDP offer shall be included according to clause 8.3.3. The SDP offer for media delivery shall be identical to the previous SDP offer done for PSS in term of codecs and transport protocol.

Once the UE receives the SIP 200 OK response, it can activate the corresponding MBMS User Service as described in the SDP as defined in clause 8.3.3.2. MBMS User Service reception initiation may correspond to the MBMS Broadcast Mode activation procedure as described in 3GPP TS 23.246 [4], clause 8.12 or the MBMS Multicast Mode activation procedure as described in 3GPP TS 23.246 [4], clause 8.2.

8.4.4.1.2 Procedures at the IM CN Subsystem

The IM CN Subsystem handles the SIP dialog as defined in 3GPP TS 23.228 [6].

8.4.4.1.3 Procedures at the SCF

When receiving the SIP modification request, the SCF will determine if the content currently delivered has PSS to MBMS switching support.

If PSS to MBMS switching is not available for the UE, the session modification is rejected and the old PSS session (along with the previous reserved resources) is maintained.

If PSS to MBMS switching is available for the UE, the SCF shall act as a B2BUA, and send a SIP BYE message to the PSS Adapter to terminate the SIP session between them. When sending the SIP BYE message to PSS Adapter, SCF shall follow the procedures defined in TS 24.229 [7] concerning the AS acting as B2BUA.

Once receiving a SIP 200 OK message from PSS Adapter, SCF sends a SIP 200 OK message to UE with a SDP answer as defined in clause 8.3.3.4.

8.4.4.1.4 Procedures at the PSS Adapter

When receiving a SIP BYE message from SCF, as well as receiving RTSP 200 OK message from PSS Server, the PSS Adapter shall conform to clause 8.2.6.5.

8.4.4.1.5 Procedures at the PSS Server

The procedures at the PSS Server shall conform to those defined in 3GPP TS 26.234 [8].

8.4.4.2 Combined session teardown

The combined session teardown shall conform to clause 8.3.5.

9 Policy and charging control

9.1 General

For the purpose of the present specification, the policy and charging control (PCC) is according to 3GPP TS 23.203 [12]. This clause is relevant when PCC is present. However, IMS based PSS and MBMS User Services can be realized without PCC. When PCC is not present, the UE is responsible for allocation of the resources based on Session Description information.

Service subscription control is performed by the SCF at registration and at PSS and MBMS session initiation.

QoS control is different for PSS and MBMS User Services.

9.2 QoS control

The P-CSCF is used as the Application Function in the PCC architecture. The PCRF decides how policy control of the QoS is performed for IMS initiated and controlled PSS and MBMS User Service.

In case of PSS, the PCRF shall use the SDP received from the P-CSCF during session establishment to calculate the proper QoS authorization. The way the QoS is enforced in this architecture is defined in 3GPP TS 23.203 [12].

In case of MBMS, the PCRF shall not initiate the establishment of a specific bearer.

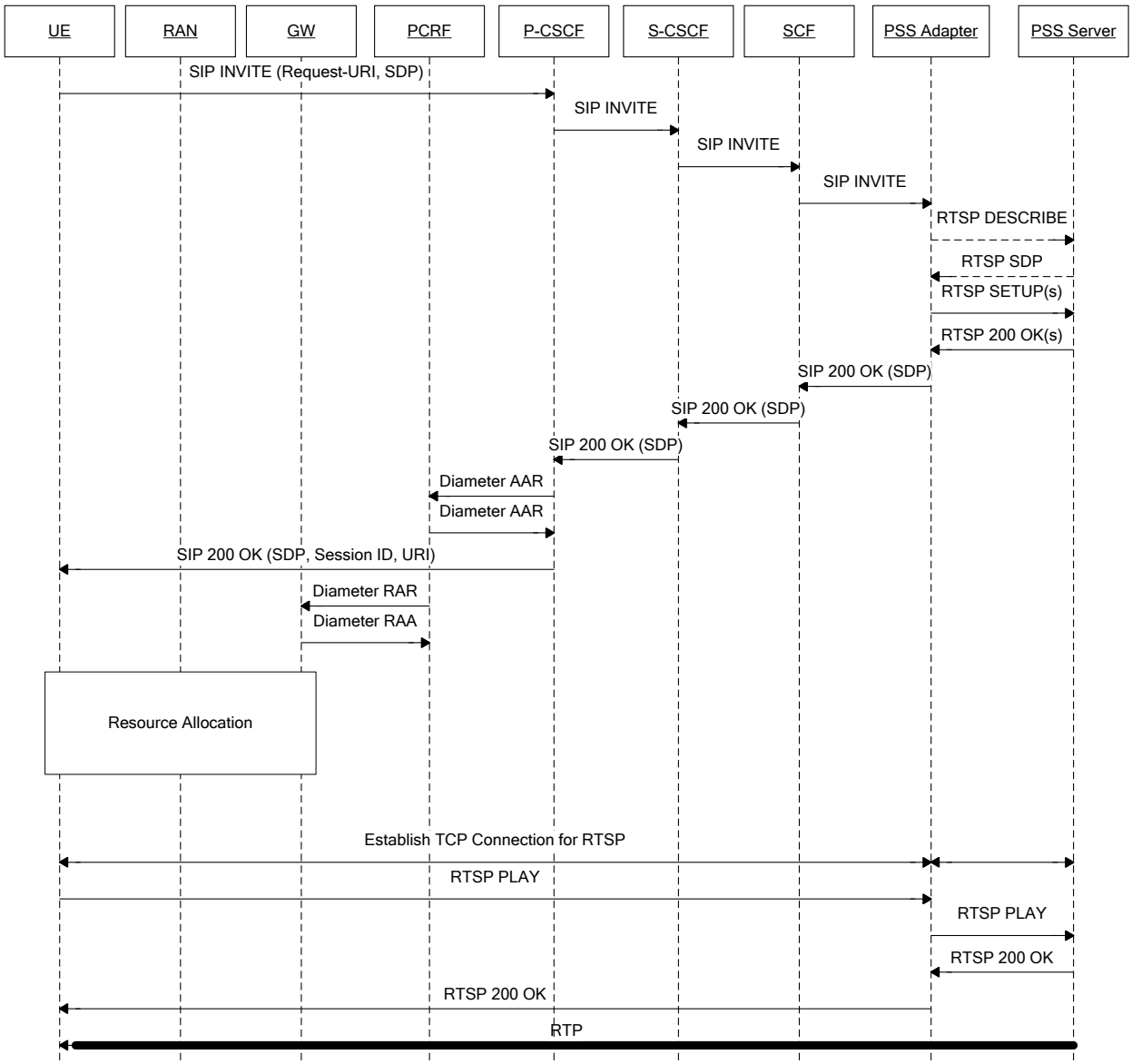

Figure 20: PSS QoS Policy Control

NOTE: The sequence shown is simplified and does not e.g. show session progress messages and the ACK message from the UE in response to the reception of 200 OK.

The PSS case of QoS control is shown on figure 20. The appropriate existing bearers are used or new required bearers are allocated. Network initiated bearer control and UE initiated bearer control are possible. When receiving the final SDP, the UE shall initiate the establishment of the required bearers unless a network initiated bearer allocation procedure is already ongoing, or the UE has been configured to use network initiated resource control.

10 Security Procedures

10.1 General

Different security procedures apply for IMS, MBMS and PSS.

IMS level authentication and access security is performed during IMS registration in accordance to [7].

PSS-Only: PSS defines an optional confidentiality protection of individual RTP payloads used in a streaming session. If PSS confidentiality protection as defined in 3GPP TS 26.234 [8], Annex K. is used, then the terminal initiates the GAA/GBA Bootstrapping procedure 3GPP TS 33.220 [26] after a successful IMS registration and Service discovery.

MBMS-only and combined PSS/MBMS service offerings: MBMS security is based on GAA/GBA [26]. The GAA/GBA Bootstrapping procedure is initiated by the UE after a successful IMS registration and Service discovery. It is necessary before any service description retrieval and session initiation.

GBA (see 3GPP TS 33.220 [26]) is used to generate a master key Ks from which NAF specific keys (e.g. Ks_NAF for ME based key management) can be derived when needed. It is also used to authenticate the user for signaling that is not performed via the IMS core network (e.g. HTTP based service description retrieval).

GBA is also used to generate and provision the NAF keys (e.g. Ks_NAF for ME based key management) - which is the Long Term Key that is used in content encryption/decryption procedures – and the B-TID – which is the corresponding bootstrapping transaction identifier.

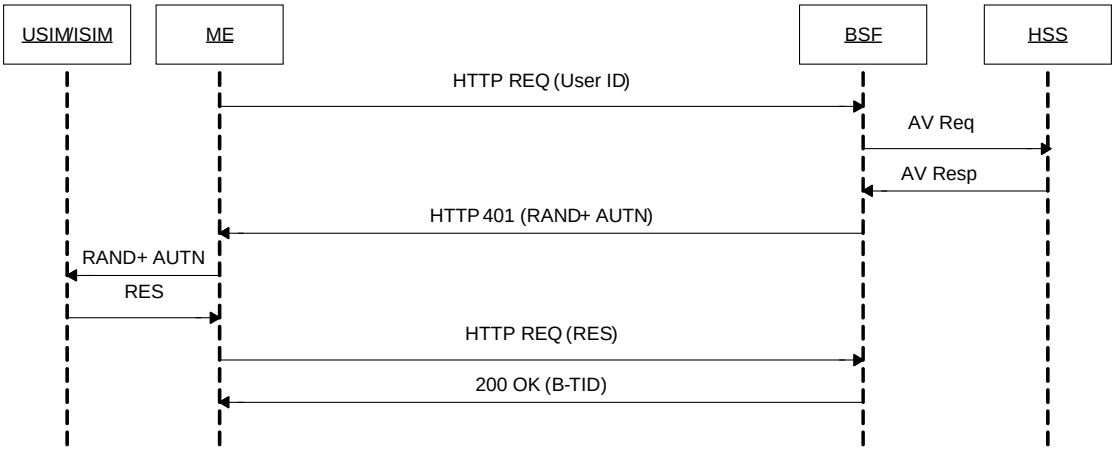

Figure 21: GBA/GAA Bootstrapping procedure

Figure 21 illustrates the GBA/GAA bootstrapping procedure. The following steps are performed. See [26] for details:

- The UE sends a request to the BSF with its IMPI as User ID. The UE discovers the address of the BSF as specified in [26].
- The BSF then acquires one Authentication Vector from the HSS and may acquire the User's GUSS (GBA User Security Settings) and forwards the RAND and AUTN to the UE in the HTTP 401 message.
- The UE checks AUTN to verify that the challenge is from an authorised network.
- The UE sends another HTTP request, containing the Digest AKA response (calculated using RES), to the BSF.
- The BSF authenticates the UE by verifying the Digest AKA response. The BSF shall send a 200 OK message, including a B-TID, to the UE to indicate the success of the authentication.

If UICC based MBMS key management is required, then USIM shall be used. Otherwise either USIM or ISIM may be used.

NOTE: The reason for this is that UICC based MBMS key management is currently specified only for USIM.

10.2 Secure Service Description Retrieval

The Service Description retrieval procedure allows the UE to acquire the necessary information to select and initiate PSS and/or MBMS sessions using IMS procedures. See clause 7 for more details on this procedure.

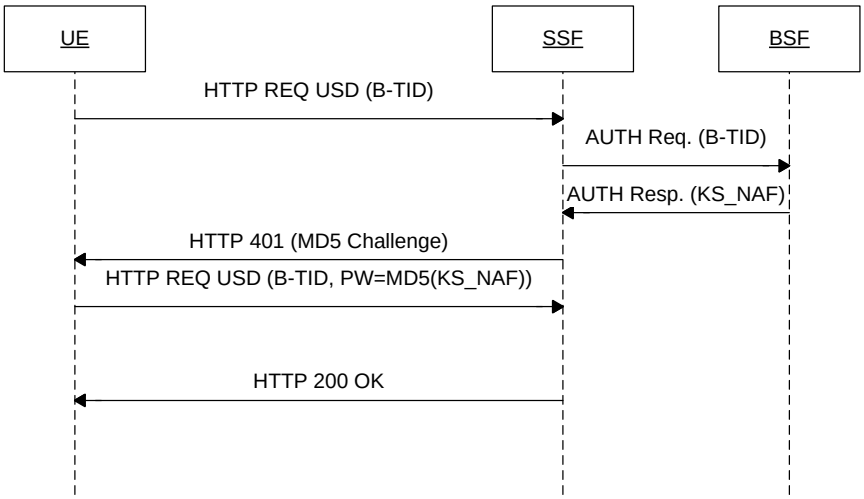

Figure 22: Service Description retrieval with authentication

Figure 22 describes the Service Description retrieval procedure with authentication.

The UE requesting a service description towards the SSF (acting as a GBA Network Application Function (NAF)) shall include the B-TID corresponding to the Ks established during the bootstrapping procedure. When the SSF receives the service description request, it shall trigger an authentication request towards the BSF to acquire the NAF keys (e.g. Ks_NAF for ME based key management) of the user if the SSF does not already have the NAF keys available. The SSF shall trigger HTTP digest authentication procedure towards the UE in accordance with 3GPP TS 33.222 [20].

The SSF shall use TLS to encrypt the Service Description during retrieval.

10.3 PSS Authentication and Content encryption

Void (TBD).

10.4 MBMS Security procedures

The IMS based MBMS user service security procedures shall fulfil the key management procedures defined in TS 33.246 [5], including MSKprocedures in clause 6.3.2 of TS 33.246 [5], and MTK procedures in clause 6.3.3 of TS 33.246 [5]. The MSK procedure further includes MBMS user service registration procedure, deregistration procedure, MSK request procedure and MSK delivery procedure.

Clause 10.4.1 describes MBMS security procedures where HTTP is used as described in TS 33.246 [5], and BMSC.UPF acts as NAF to interact with BSF and derives security keys.

Clause 10.4.2 describes MBMS security procedures where SIP is used and SCF act as a NAF to interact with BSF and derives security keys.

The procedures according to clause 10.4.1 and clause 10.4.2, respectively, are alternatives for MBMS security procedures. They are equal in terms of security provision. The UE shall support both alternatives for MBMS security procedures. The UE is informed about the supported MBMS security procedure by retrieval of the service attachment information from the SDF as defined in Annex H.

10.4.1 HTTP based MBMS security procedure

Clause 10.4.1 describes MSK procedures, and clause 10.4.2 describes MTK procedures.

10.4.1.1 MSK procedures

The IMS based MBMS user service registration procedure, deregistation procedure, MSK request procedure and MSK delivery procedure are defined in clause 10.4.1 to 10.4.4 respectively.

10.4.1.1.1 IMS based MBMS user service key registration procedure

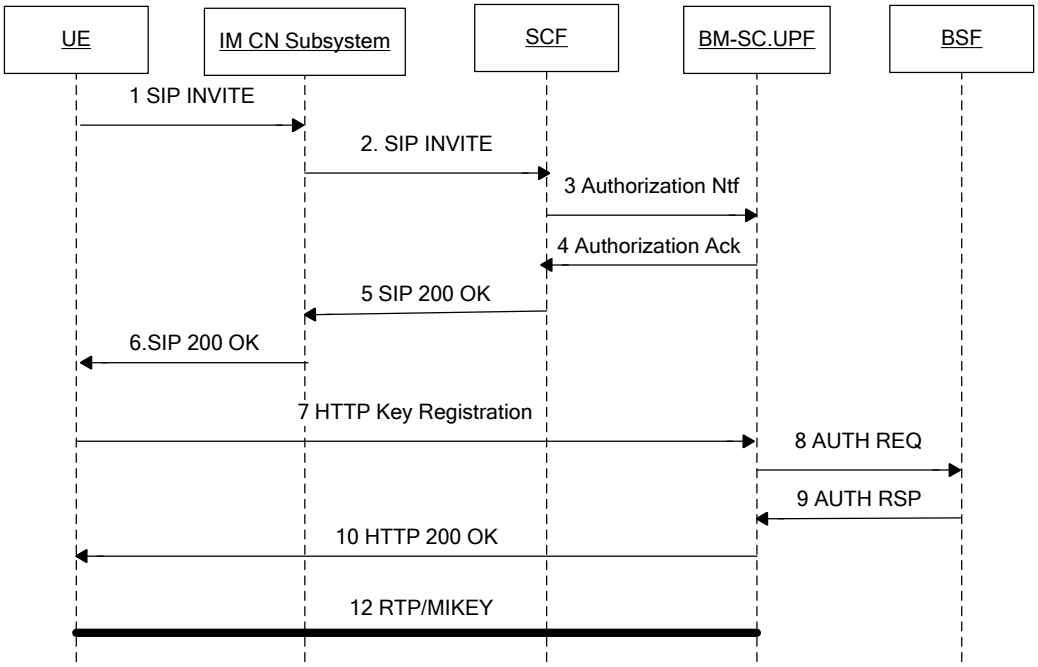

Figure 23: Security procedures for IMS based MSMS user service

10.4.1.1.1.1 Procedures at the UE

When the user indicates to view an MBMS user service, the UE shall send a SIP INVITE message to SCF via IM CN Subsystem, The SIP INVITE message shall include MBMS Service ID to indicate which service the user intends to watch, as defined in clause 8.3.3.2, and a P- Preferred –Identity header with the value set to the desired user public identity.

After receiving a SIP 200 OK message, the UE shall perform MSK registration procedure as defined in clause 6.3.2.1a of TS 33.246[5]. The HTTP POST message initiated by the UE and addressed to BMSC.UPF shall conform to TS 33.246[5], and include an HTTP X-3GPP- Intended -Identity header as defined in TS 24.109 [22] with the value set to the user's public identity.

10.4.1.1.1.2 Procedures at the IM CN Subsystem

The IM CN Subsystem handles the SIP dialog as defined in 3GPP TS 23.228 [6].

10.4.1.1.1.3 Procedures at the SCF

Upon receipt of a SIP INVITE request, the SCF shall perform service authorization procedure as defined in clause 8.3.3.4.

After successfully service authorization, the SCF shall send an Authorization Notification HTTP POST message to BMSC.UPF. The HTTP POST message shall be populated as follows:

- the HTTP version shall be 1.1 which is specified in RFC2616 [34];

- the base of the Request-URI shall contain the full BM-SC key management URI (e.g. http://bmsc.home1.net:1234);
- the Request-URI shall contain an URI parameter "requesttype" that shall be set to "authorize", i.e. Request-URI takes the form of "/keymanagement?requesttype= authorize";
- the HTTP X-3GPP-Asserted-Identity header shall be the IMPU of the user retrieved from the SIP INVITE message.
- the HTTP header Content-Type shall be the MIME type of the payload, i.e. "application/mbms-authorize+xml".
- the HTTP payload shall contain request including the authorized MBMS Service ID ServiceId carried in the SIP INVITE message;

After receiving an authorization acknowledgement, the SCF shall send a SIP 200 OK message to the UE as defined in clause 8.3.3.4.

10.4.1.1.1.4 Procedures at the BM-SC.UPF

Upon receiving an Authorization Notification message from SCF, the BMSC.UPF shall store the received message, and respond an Authorization Acknowledgment HTTP 200 OK message.

Upon receiving MSK registration message from a UE, the BMSC.UPF shall act as a NAF and perform GBA usage procedure with BSF to get GBA keys to derive MUK. The MUK is used for BM-SC.UPF to protect the transfer of MSK.

The BMSC.UPF shall authorize the UE according to the stored information. The BMSC.UPF shall send MSKs to the UE corresponding to the service IDs in the received message via MIKEY, as defined in clause 6.3.2.1a of TS 33.246[5].

10.4.1.1.2 IMS based MBMS user service key deregistration procedure

The IMS based MBMS user service MSK request procedure conforms to clasue 6.3.2.1B of TS 33.246[5]. Additionaly, The HTTP POST message initiated by the UE and addressed to BMSC.UPF shall include an HTTP X-3GPP- Intended -Identity header as defined in TS 24.109 [22] with the value set to the user’s public identity.

10.4.1.1.3 IMS based MBMS user service MSK request procedure

The IMS based MBMS user service MSK request procedure conforms to clasue 6.3.2.2 of TS 33.246[5]. Additionaly, The HTTP POST message initiated by the UE and addressed to BMSC.UPF shall include an HTTP X-3GPP- Intended -Identity header as defined in TS 24.109 [22] with the value set to the user’s public identity.

10.4.1.1.4 IMS based MBMS user service MSK delivery procedure

The IMS based MBMS user service MSK delivery procedure conforms to clause 6.3.2.3 of TS 33.246[5].

10.4.1.2 MTK procedure

The IMS based MBMS user service MTK procedure conforms to clause 6.3.3 of TS 33.246[5].

10.4.2 SIP based MBMS security procedures

10.4.2.0 General

Clause 10.4.2 describes an alternative to clause 10.4.1 for MBMS security procedures, where the NAF for the MBMS User Services is implemented in the SCF and interacts with the BSF. The procedures apply for both ME and UICC based key management.

The MBMS Security specification 3GPP TS 33.246 [5] defines a set of security procedures. The following list describes how these procedures are applied in the context of IMS based MBMS user services when using SIP based MBMS security procedures.

- “MBMS User Service Registration procedure”.

  - In the context of SIP based MBMS security procedure, this procedure is applied as specified in clause 10.4.2.1 in the present document.

- “MBMS User Service Deregistration procedure”.
  - In the context of SIP based MBMS security procedure, this procedure is applied as specified in clause 10.4.2.1A in the present document.

- “Basic MSK request procedure”.
  - In the context of SIP based MBMS security procedure, this procedure is applied as specified in clause 10.4.2.2 in the present document.

- “Missed key update procedure”.
  - This procedure is equivalent to Basic MSK request procedure.

- “BM-SC solicited pull procedure”.
  - In the context of SIP based MBMS security procedure, this procedure is applied as specified in clause 10.4.2.4 in the present document.

- “MSK delivery procedure”
  - In the context of SIP based MBMS security procedure, this procedure is applied as defined TS 33.246 [5] with exception that SCF FQDN is sent instead of BM-SC FQDN.

- “MTK update procedure”
  - In the context of SIP based MBMS user services this procedure is applied as defined TS 33.246 [5].

10.4.2.1 SIP based MBMS User Service Registration

This procedure is used to register a UE with one or more MBMS User Services.

It is assumed that the UE has received the service description (cf. clause 10.2). The service description includes, e.g. the service protection description. The service protection description is similar as defined in 3GPP TS 33.246 [5] with the following exception: the FQDN of the BM-SC is not included in the service protection description. Instead, the service protection description for the service shall include an FQDN belonging to the SCF as the SCF acts as a NAF.

NOTE 1: This is to ensure consistent NAF key derivation in the UE and in the BSF as the SCF acts as a NAF and as the FQDN of the NAF is used as input in NAF key derivation.

In case more than one BM-SCs are connected to the SCF, the SCF shall locally associate a different one of its FQDNs to each connected BM-SC. As there is one NAF FQDN indicated in the service protection description for each service, the SCF (NAF) will know from the userServiceId indicated by the UE which NAF FQDN to be used for NAF key derivation.

NOTE 2: This will ensure that each connected BM-SC will get different NAF key, and consequently will get different MUK. GBA TS 33.220 [26] allows the NAF to be known in DNS under several FQDNs if it is ensured that the correct NAF FQDN is used in NAF key derivation.

It is also assumed that the UE has been registered and authenticated to IMS and the SIP procedures are protected according to 3GPP TS 33.203 [31], and that the UE has run GBA bootstrapping with the BSF as defined in 3GPP TS 33.220 [26]. It is also assumed that the network interfaces are protected with Network Domain Security (NDS/IP) as defined in 3GPP TS 33.210 [32].

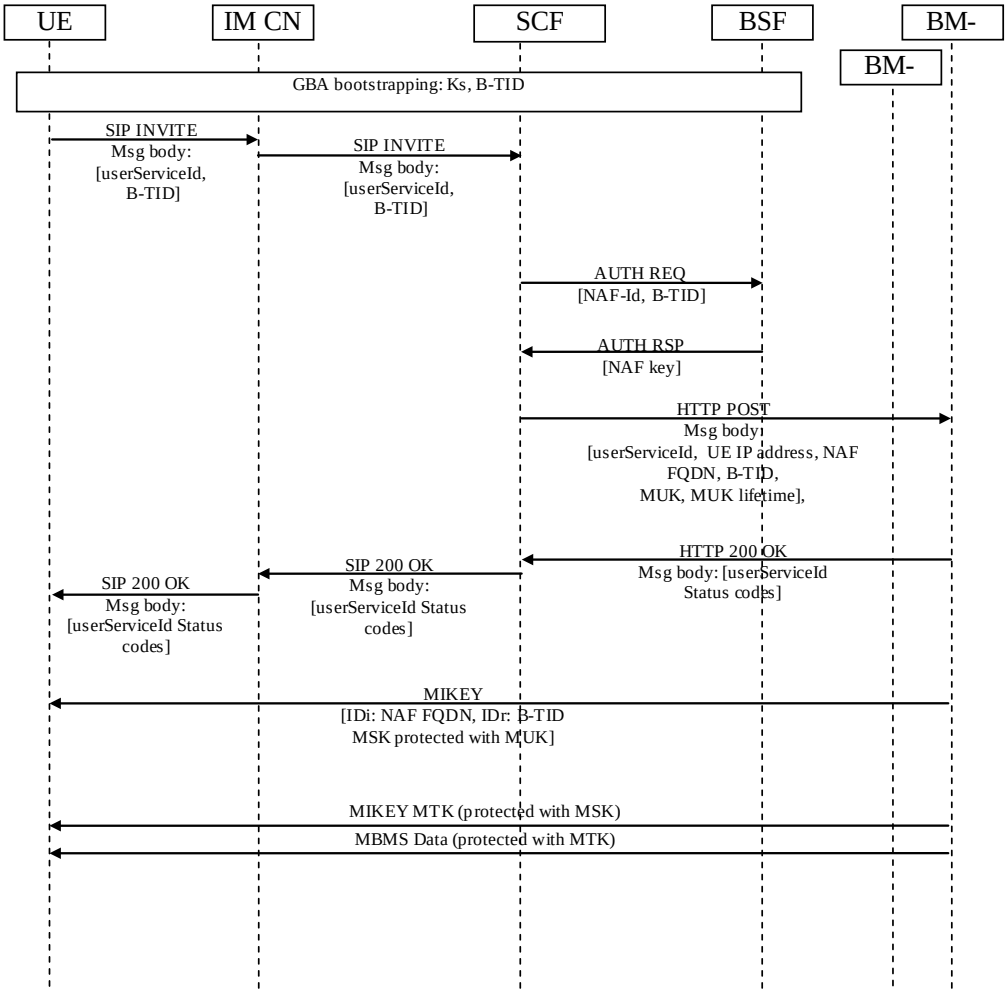

Figure 24: SIP based MBMS User Service Registration

The procedure is as follows (cf. figure 24 which is simplified as it does not show all parameters):

- The UE sends a SIP INVITE to the SCF via the IM CN subsystem. The INVITE indicates SCF in the Request-URI and the message includes the identities of the requested MBMS user services (userServiceIds) for which the UE wants to register and the bootstrapping transaction identifier (B-TID) in the body of the SIP INVITE. The XML schema for the list of MBMS user service IDs is defined in TS 26.346 [11] and the XML schema for the B-TID is defined in annex I.1.

- The SCF receives the IP address of the UE and the asserted identitie(s) of the UE from the headers of the SIP INVITE message. The SCF performs a check based on stored subscription information whether the UE is authorized to access the requested MBMS user services. If yes, the procedure continues. If not, the procedure is terminated.

- If there is no B-TID stored for the UE or if the received B-TID is different than the one stored for the UE, the SCF runs GBA usage procedure with the BSF over Zn to fetch the NAF keys corresponding to the UE as defined in 3GPP TS 33.220 [26]. The NAF-Id which the SCF uses over Zn is constructed from the NAF FQDN indicated in the service protection description for this service and Ua security protocol identifier specified in 3GPP TS 33.220 [26]. As there is one NAF FQDN indicated in the service protection description for each service, the SCF will know from the userServiceId indicated by the UE which FQDN to be used as NAF FQDN. Upon receiving the NAF keys from the BSF, the SCF derives MBMS User Key (MUK) as defined in TS 33.246 [5].
  If the received B-TID is not valid or if the SCF desires the UE to make a new GBA bootstrapping, the SCF shall response to the UE with an appropriate error message. The error message will trigger the UE to run new GBA bootstrapping.

- The SCF sends a HTTP POST message to the BM-SC. The SCF populates the HTTP POST as follows:

  - the HTTP version shall be 1.1 which is specified in RFC 2616 [34];
  - the base of the Request-URI shall contain the full BM-SC key management URI (e.g. http://bmsc.home1.net:1234);
  - the Request-URI shall contain an URI parameter "requesttype" that shall be set to "sip-based-register", i.e. Request-URI takes the form of "/keymanagement?requesttype= sip-based-register ";
  - the SCF may add additional URI parameters to the Request-URI;
  - X-3GPP-Asserted-Identity header which includes the identitie(s) of the UE;
  - the HTTP header Content-Type shall be the MIME type of the payloads;
  - the HTTP payload shall contain an XML document including a list of one or more userServiceIds of MBMS User Services to which the UE wants to register, IP address of the UE, MBMS user key (MUK), lifetime of MUK, NAF FQDN and B-TID. NAF FQDN and B-TID are included as they are further included in the MIKEY MSK messages from the BM-SC to the UE to identify the used MUK (i.e. NAF key). The XML schema for the list of MBMS user service IDs is defined in TS 26.346 [11] and the XML schema for carrying IP address, MUK, MUK lifetime, NAF FQDN and BTID is defined in annex x.2.
  - the SCF may add additional HTTP headers to the HTTP POST request.

- Upon receiving the HTTP POST message, the BM-SC checks that the HTTP POST is valid, and extracts the request for further processing. As the HTTP POST message came from SCF with asserted identitie(s), the BM-SC does not need to authenticate the UE as the UE has been authenticated by the IMS. Also, the HTTP POST message also implicitly indicates to the BM-SC that the SCF has authorized the UE to register to the indicated MBMS User Service(s).

  The BM-SC stores the received information and returns HTTP 200 OK to the SCF. The BM-SC shall populate HTTP response as follows:

  - the HTTP status code in the HTTP status line shall be 200;
  - the HTTP header Content-Type shall be the MIME type of the payload, i.e. "application/mbms-register-response+xml ";
  - the HTTP payload shall contain an XML document including a list including one status code for each MBMS User Service. The XML schema of the payload is the same that is used for MBMS Registration in 3GPP TS 33.246 [5] and it is specified in 3GPP TS 26.346 [11].

- Upon receiving the HTTP 200 OK., the SCF then includes the XML body from the HTTP 200 OK message into a SIP 200 OK message and sends the SIP 200 OK message to the UE via the IM CN subsystem.

- Upon receiving the 200 OK the UE derives NAF keys corresponding to the NAF-Id. The NAF-Id is constructed from the NAF FQDN indicated in the service description and Ua security protocol identifier specified in 3GPP TS 33.220 [26]. The UE derives MBMS User Key (MUK) from the NAF key as defined in 3GPP TS 33.246 [5].

BM-SC can now start sending MIKEY MSK messages (protected with MUK) to the UE as defined in 3GPP TS 33.246 [5]. In MIKEY MSK messages the BM-SC shall include the NAF FQDN and B-TID received from the SCF as they are used to identify the used MUK (i.e. NAF keys).

10.4.2.1a SIP based MBMS User Service De-registration

This procedure is used to de-register a UE from one or more MBMS User Services.

The same assumptions apply as in SIP based MBMS User Service Registration in clause 10.4.2.1.

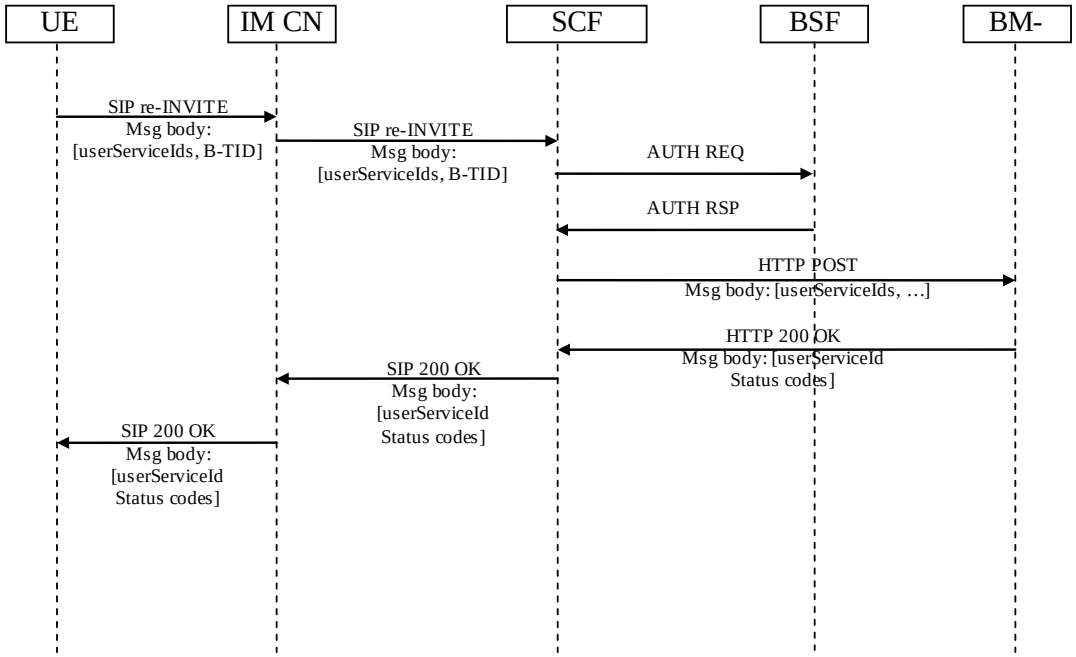

Figure 24a: SIP based MBMS User Service De-registration

The procedure is as follows (cf. figure 24a which is simplified as it does not show all parameters):

- UE sends a SIP re-INVITE to the SCF via the IM CN subsystem. The re-INVITE indicates SCF in the Request-URI and the message includes the identities of the requested MBMS user services (userServiceIds) from which the UE wants to de-register and the bootstrapping transaction identifier (B-TID) in the body of the SIP INVITE.. The XML schema for the list of MBMS user service IDs is defined in TS 26.346 [11] and the XML schema for the B-TID is defined in annex x.1.

- The SCF receives the asserted identitie(s) of the UE from the headers of the SIP re-INVITE message.

- If there is no B-TID stored for the UE or if the received B-TID is different than the one stored for the UE, the SCF runs GBA usage procedure with the BSF over Zn to fetch the NAF keys corresponding to the UE as defined in 3GPP TS 33.220 [26]. The NAF-Id which the SCF uses over Zn constructed from the NAF FQDN indicated in the service protection description for this service and Ua security protocol identifier specified in 3GPP TS 33.220 [26]. Upon receiving the NAF key from the BSF, the SCF derives MBMS User Key (MUK) as defined in 3GPP TS 33.246 [5].
  If the received B-TID is not valid or if the SCF desires the UE to make a new GBA bootstrapping, the SCF shall response to the UE with an appropriate error message. The error message will trigger the UE to run new GBA bootstrapping.

- The SCF sends a HTTP POST message to the BM-SC. The SCF populates the HTTP POST as follows:

  - the HTTP version shall be 1.1 which is specified in RFC 2616 [34];

  - the base of the Request-URI shall contain the full BM-SC key management URI (e.g. http://bmsc.home1.net:1234);

  - the Request-URI shall contain an URI parameter "requesttype" that shall be set to "sip-based-deregister", i.e. Request-URI takes the form of "keymanagement?requesttype= sip-based-deregister";

  - the SCF may add additional URI parameters to the Request-URI;

  - X-3GPP-Asserted-Identity header which includes the identities of the UE;

  - the HTTP header Content-Type shall be the MIME type of the payloads;

- the HTTP payload shall contain the request an XML document including a list of one or more userServiceIds of MBMS User Services from which the UE wants to deregister. If new NAF keys were created in the previous step, then the SCF shall also include MBMS user key (MUK), lifetime of MUK, NAF FQDN and B-TID. E.g. the BM-SC may send an MSK message to invalidate the MSKs in the UE as defined in 3GPP TS 33.246 [5]. The XML schema for the list of MBMS user service IDs is defined in 3GPP TS 26.346 [11] and the XML schema for carrying MUK, MUK lifetime, NAF FQDN and BTID is defined in annex x.2;
- the SCF may add additional HTTP headers to the HTTP POST request.

- The BM-SC receives the HTTP POST message. The BM-SC checks that the HTTP POST is valid, and extracts the request for further processing. As the HTTP POST message came from SCF with asserted identities, the BM-SC does not need to authenticate the UE as the UE has been authenticated by the IMS.

  The BM-SC returns HTTP 200 OK to the SCF. The BM-SC shall populate HTTP response as follows:

  - the HTTP status code in the HTTP status line shall be 200;
  - the HTTP header Content-Type shall be the MIME type of the payload, i.e. "application/mbms-register-response+xml". XML document is the same that is used for MBMS De-registration in 3GPP TS 33.246 [5] and it is specified in 3GPP TS 26.346 [11];
  - the HTTP payload shall contain a list including one status code for each MBMS User Service.

- Upon receiving the HTTP 200 OK, the SCF then includes the XML body from the HTTP 200 OK message into a SIP 200 OK message and sends the SIP 200 OK message to the UE via the IM CN subsystem.

10.4.2.2 SIP based Basic MSK Request

This procedure is used to by the UE to request one or more MSKs.

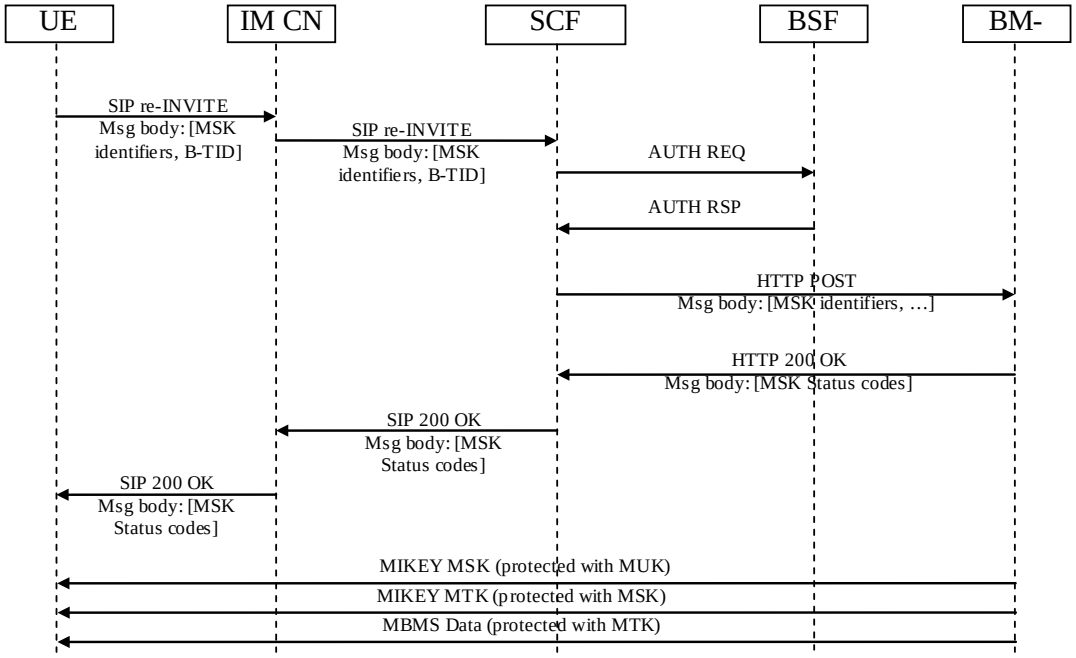

Figure 25: SIP based MBMS MSK request

The same assumptions apply as in IMS based MBMS User Service Registration in clause 10.4.2.1.

The procedure is as follows (cf. figure 25 which is simplified as it does not show all parameters):

- UE sends a SIP re-INVITE to the SCF via the IM CN subsystem. The re-INVITE indicates SCF in the Request-URI and the message includes a list of one or more Key Domain ID - MSK ID pair(s) of the MSKs that the UE

wants to receive and the bootstrapping transaction identifier (B-TID) in the body of the SIP INVITE. The XML schema for the list of MBMS user service IDs is defined in TS 26.346 [11] and the XML schema for the B-TID is defined in annex x.1.

- The SCF receives the asserted identitie(s) of the UE from the headers of the SIP re-INVITE message. The SCF performs a check based on stored subscription information whether the UE is authorized to receive the specified MSK(s). If yes, the procedure continues. If not, the procedure is terminated.

- If there is no B-TID stored for the UE or if the received B-TID is different than the one stored for the UE, the SCF runs GBA usage procedure with the BSF over Zn to fetch the NAF keys corresponding to the UE as defined in 3GPP TS 33.220 [26]. The NAF-Id which the SCF uses over Zn is constructed from the NAF FQDN indicated in the service protection description for this service and Ua security protocol identifier specified in 3GPP TS 33.220 [26]. Upon receiving the NAF keys from the BSF, the SCF derives MUK from the NAF key as defined in 3GPP TS 33.246 [5].
  If the received B-TID is not valid or if the SCF desires the UE to make a new GBA bootstrapping, the SCF shall response to the UE with an appropriate error message. The error message will trigger the UE to run new GBA bootstrapping.

- The SCF sends a HTTP POST message to the BM-SC. The SCF populates the HTTP POST as follows:

  - the HTTP version shall be 1.1 which is specified in RFC 2616 [34];

  - the base of the Request-URI shall contain the full BM-SC key management URI (e.g. http://bmsc.home1.net:1234);

  - the Request-URI shall contain an URI parameter "requesttype" that shall be set to "sip-based-msk-request", i.e. Request-URI takes the form of "/keymanagement?requesttype= sip-based-msk-request";

  - the SCF may add additional URI parameters to the Request-URI;

  - X-3GPP-Asserted-Identity header which includes the identities of the UE;

  - the HTTP header Content-Type shall be the MIME type of the payloads;

  - the HTTP payload shall contain a list of one or more Key Domain ID - MSK ID pair(s) of the MSKs that the UE wants to receive. If new NAF keys were created in the previous step, then the SCF shall also include MBMS user key (MUK), lifetime of MUK, NAF FQDN and B-TID. NAF FQDN and B-TID are included as they may be further included in the MIKEY MSK messages from the BM-SC to the UE, The XML schema for the list of Key Domain ID - MSK ID pair(s) is defined in 3GPP TS 26.346 [11] and the XML schema for carrying IP address, MUK, MUK lifetime, NAF FQDN and BTID is defined in annex x.2.

  - the UE may add additional HTTP headers to the HTTP POST request.

- The BM-SC receives the HTTP POST message. The BM-SC checks that the HTTP POST is valid, and extracts the request for further processing. As the HTTP POST message came from SCF with asserted identities, the BM-SC does not need to authenticate the UE as the UE has been authenticated by the IMS. Also, the HTTP POST message also implicitly indicates to the BM-SC that the SCF has authorized the UE to receive the specified MSK(s).

  The BM-SC stores the received information and returns HTTP 200 OK to the SCF. The BM-SC shall populate HTTP response as follows:

  - the HTTP status code in the HTTP status line shall be 200;

  - the HTTP header Content-Type shall be the MIME type of the payload, i.e. "application/mbms-msk-response+xml";

  - the HTTP payload shall contain a list including one status code for each MSK. The XML schema of the payload is the same that is used for MBMS MSK request in 3GPP TS 33.246 [5] and it is specified in 3GPP TS 26.346 [11].

- The SCF receives the HTTP 200 OK. The SCF then includes the XML body from the HTTP 200 OK message into a SIP 200 OK message and sends the SIP 200 OK message to the UE via the IM CN subsystem.

10.4.2.3 Updating MUK

The GBA session (i.e. key Ks derived NAF specific keys, e.g. MUK) has a limited lifetime. The GBA session may expire during service consumption. In this case the UE shall run GBA bootstrapping again to create a new Ks. The UE shall then re-register to the services with the SIP based MBMS registration procedure defined in clause 10.4.2.1 with re-INVITE and the new B-TID. This will create a new MUK in the UE and network.

10.4.2.4 SIP based BM-SC solicited pull

According to 3GPP TS 33.246 BM-SC solicited pull procedure is triggered by the BM-SC by sending an MSK message with a specific MSK-ID value. This will trigger the UE to perform MSK request. IMS based MBMS uses the BM-SC solicited pull procedure as defined in TS 33.246 to trigger the UE to perform SIP based basic MSK request procedure which is specified in clause 10.4.2.2.

11 Blending of Presence and PSS/MBMS user services

11.1 General description

This clause describes the mechanisms that apply when IMS based PSS and MBMS user services are combined with presence service.

The architecture and functional description of the presence service when used in relation to the IMS based PSS & MBMS services shall conform to [37].

The protocol details for the presence service when used in relation to the IMS based PSS & MBMS services shall conform to [36].

The following call flow gives a high-level description for presence service used in the context of IMS based PSS and MBMS. In this example, the UE 1 is the watcher and the UE 2 is the presentity. The UE 2 is in the UE 1's list of contacts and wants to publish on-demand content currently watching.

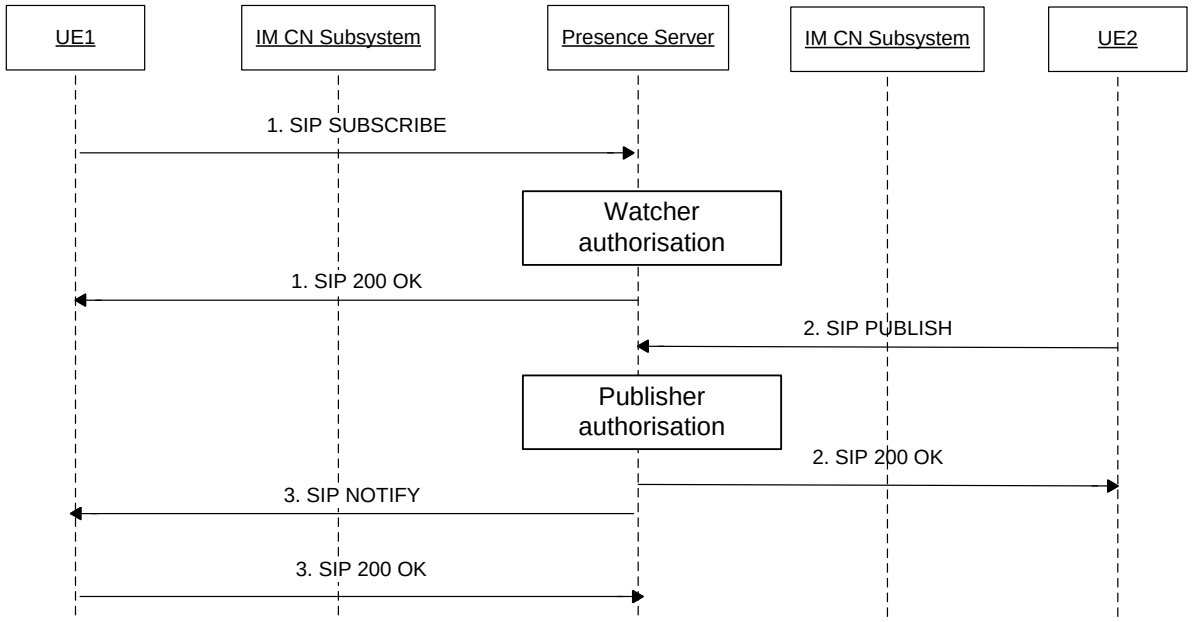

Figure 26: High-level description for presence service used in the context of IMS based PSS and MBMS

1. The UE 1 subscribes for presence information for a list of contacts which includes the UE 2, by sending a SIP SUBSCRIBE message to the Presence Server as defined in [36].

2. After having initiated the PSS or MBMS session, or after a content switching, the UE 2 decides to publish what content is being consumed. The UE 2 sends a SIP Publish message to the Presence Server, as defined in [36], including additional attributes specific to PSS and MBMS such as the content being consumed.

3. On reception of the SIP Publish, the Presence server notifies the UE 1 of what the UE 2 is doing, by sending a SIP NOTIFY message as defined in [36].

11.2 Procedures at the UE acting as presentity

The UE acting as presentity may send a SIP PUBLISH in the following cases:
- On receipt of a final SIP 200 OK concerning a PSS streaming session initiation procedure;
- On receipt of a final SIP 200 OK concerning a MBMS streaming session initiation procedure;

During a streaming session, the UE may also send a PUBLISH request after having performed content switching. This includes the cases of:
- PSS content switching,
- MBMS content switching,
- Switching from PSS to MBMS streaming with channel change,
- Switching from MBMS to PSS streaming with channel change.

The content of the PUBLISH request shall be set as follows:

- The request-URI, the To and the From headers shall be set to the public user identity of the user,
- The Event header shall be set to the "presence" event package,
- The content type shall be set to "application/pidf+xml"

The SIP PUBLISH generated by the UE acting as presentity shall conform to [36].

The presence XML document included in the PUBLISH body shall conform to [36] and [37].

Additional elements specific to PSS and MBMS services shall be included in the XML document. In case of a Live TV service, these specific additional elements are the Live TV channel currently watched, and the current TV program. In case of an on-demand service, specific additional element is the on-demand content.

The XML schema used when the presence documents are published by the UE is described in Annex E of [24], with the following conformity:
- the "currentBCServiceID" refers to the LiveTV channel delivered in PSS or MBMS,
- the "currentBCProgramID" refers to the currently watched program delivered in PSS or MBMS,
- the "currentCoDContentID" refers to the currently watched on-demand content delivered in PSS.

11.3 Procedures at the UE acting as watcher

The SIP SUBSCRIBE generated by the UE acting as a watcher shall conform to [36].

The UE acting as a watcher may then receive a SIP NOTIFY message including the content consumed by the UE acting as presentity.

12 Networked Bookmark Service

Bookmarking allows a user receiving a content item at an UE to mark a point in time in the streamed content which he can access at a later time. The content item is CoD delivered by a PSS server.

The user can later retrieve the bookmark from any device on which he is registered.

The XML schema used for networked bookmark service is defined in Annex J.

12.1 Bookmarking Creation and Storage

The call flow in Figure 27 depicts the sequence for creating a bookmark for a CoD item and storing it in the user's service profile for later retrieval.

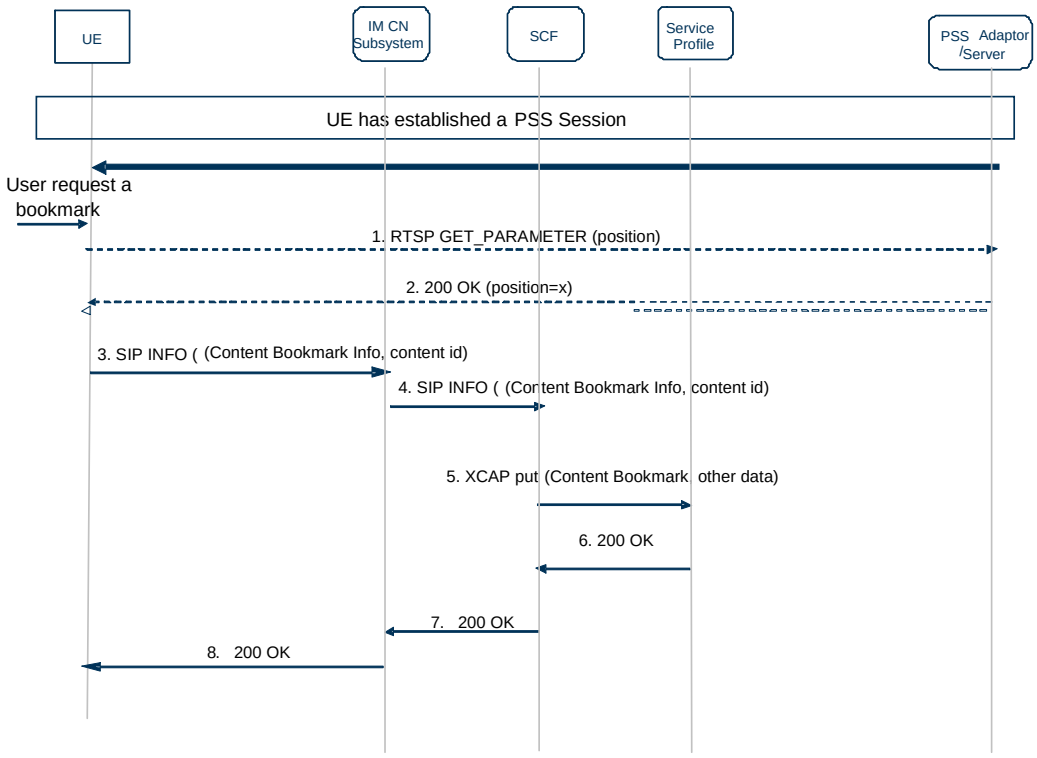

Figure 27: IMS-based Content Bookmark creation and Storage

The following is a brief description of the steps:

1. The UE has established a CoD session. At some point in time, the user decides he wants to create a bookmark. If the UE does not have the current play out position, it sends an RTSP GET-PARAMETER request to the PSS server to request it.

2. The response to the RTSP GET-PARAMETER request is returned by the PSS server in an RTSP 200 OK.

3. The UE sends to the IM CN Subsystem a SIP INFO Message that includes the Content-Bookmark Info package as well as the CoD content id. The Content Type shall include the registered MIME type of XML documents representing bookmarking data, and shall be set to "application/3gpp-ims-pss-mbms-bookmark+xml" (see Annex J).

4. The IM CN Subsystem forwards the SIP INFO Message to the SCF.

5. The SCF issues an XCAP request, on behalf of the user, to update the service profile with the Content-Bookmark Info data.

6. The Service Profile returns the response to the SCF.

7. The SCF returns a SIP 200 OK to the IM CN Subsystem.

8. The IM CN Subsystem forwards the SIP 200 OK to the UE.

12.2 Bookmarking Retrieval

Once a bookmark is created, a user can later retrieve the bookmark anytime, e.g. prior to or during PSS session establishment procedure, from any device on which he is registered.

Clause 12.2.1 depicts the bookmarking retrieval procedure which is independent to PSS session establishment procedure, and clause 12.2.2 depicts the bookmarking retrieval procedure during a PSS session establishment process.

12.2.1 Bookmarking Retrieval independent to session establishment

The call flow in Figure 28 depicts the bookmark retrieval procedure for retrieving bookmarks stored in the user's service profile.

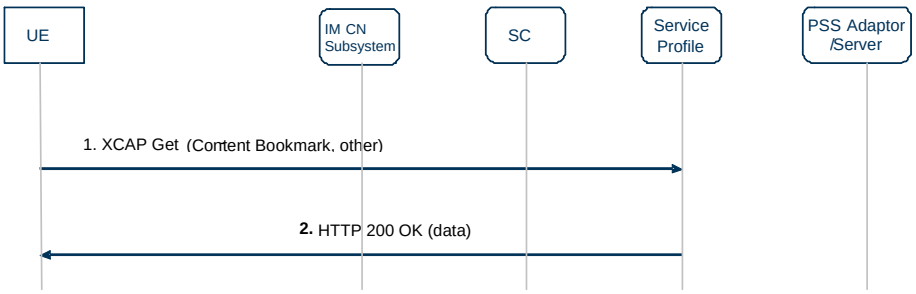

Figure 28: Bookmark retrieval independent to session establishment

The following is a brief description of the steps:

1. The UE issues an XCAP GET request to the Service Profile to request the bookmarks.
2. The bookmarks are returned in an HTTP 200 OK response.

12.2.2 Bookmarking Retrieval during session establishment

The call flow in Figure 29 depicts the bookmark retrieval procedure for retrieving bookmarks stored in the user's service profile during a PSS session establishment process.

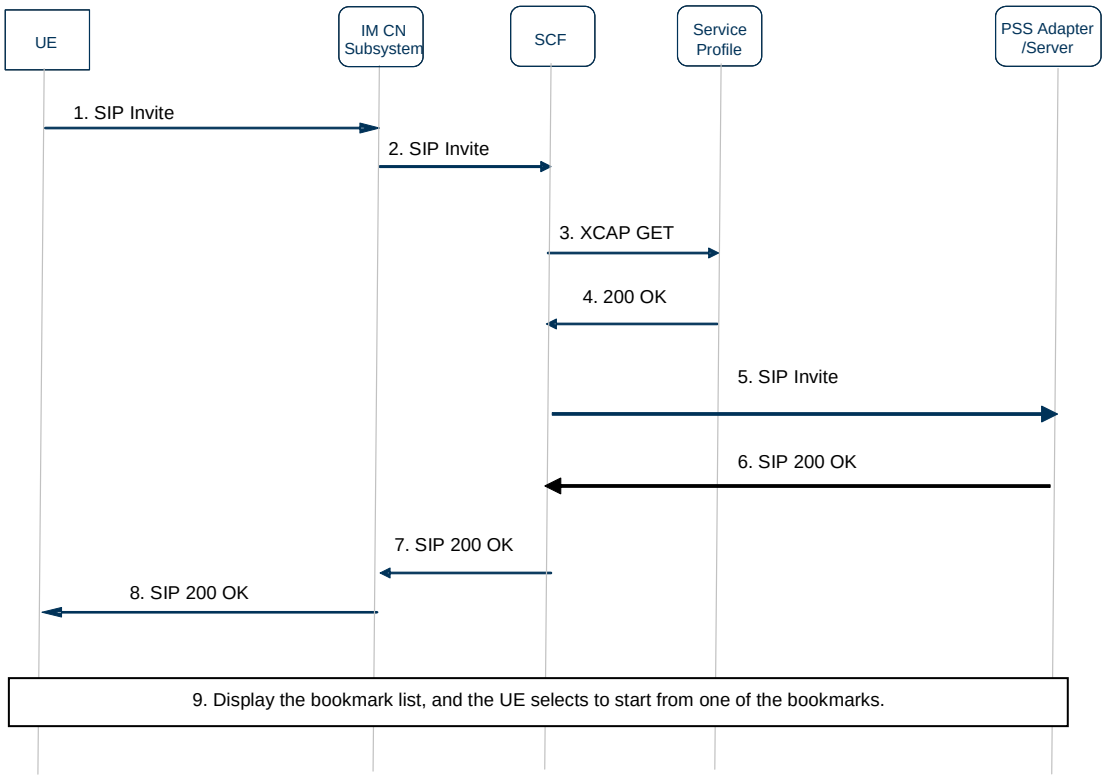

Figure 29 Bookmark Retrieval during session establishment

1. The UE sends an SIP INVITE to the SCF via the IM CN Subsystem.
2. The IM CN Subsystem forwards the SIP INVITE to the SCF.
3. The SCF validates the SIP INVITE request, and checks the rights of user for the requested content by sending an XCAP GET with the user ID and content identifier to the Service Profile.
4. The Service Profile authorizes the user, and returns the user's service profile with the bookmark list if it is set before. Each bookmark in the list should contain at least the content ID and the time reference.
5. The SCF selects the appropriate PSS Adapter for the requested content, and sends the SIP INVITE to the PSS Adapter via the IM CN Subsystem. The PSS Adapter then selects the PSS Server and sends the RTSP SETUP to the PSS Server.
6. The PSS Server returns an RTSP 200 OK to PSS Adapter, which returns a SIP 200 OK to the SCF via the IM CN Subsystem.
7. The SCF returns the SIP 200 OK to the UE via the IM CN Subsystem, with the bookmark list.
8. The IM CN Subsystem forwards the SIP 200 OK to UE.
9. The UE plays out the bookmark list to the user, and the user selects the bookmark from which they wish to start viewing the content.

13 User generated content service

This clause defines the provision and distribution procedures of user generated content (UGC) for IMS based PSS and MBMS User Services.

User generated content refers to content that is provided by an UE e.g. video or audio captured by an in-built camera or microphone. In the following this UE is noted as providing UE, and the UE receiving UGC by PSS or MBMS is noted as receiving UE.

The UGC provision procedure allows a providing UE to declare and upload/upstream UGC content to the network, which is defined in clasue 13.1. The UGC distribution procedrue allows a receiving UE to select and watch User Generated Content which is defined in clause 13.2.

13.1 UGC content provision procedure

UGC provision procecure is carried out in four steps as shown in figure 30:

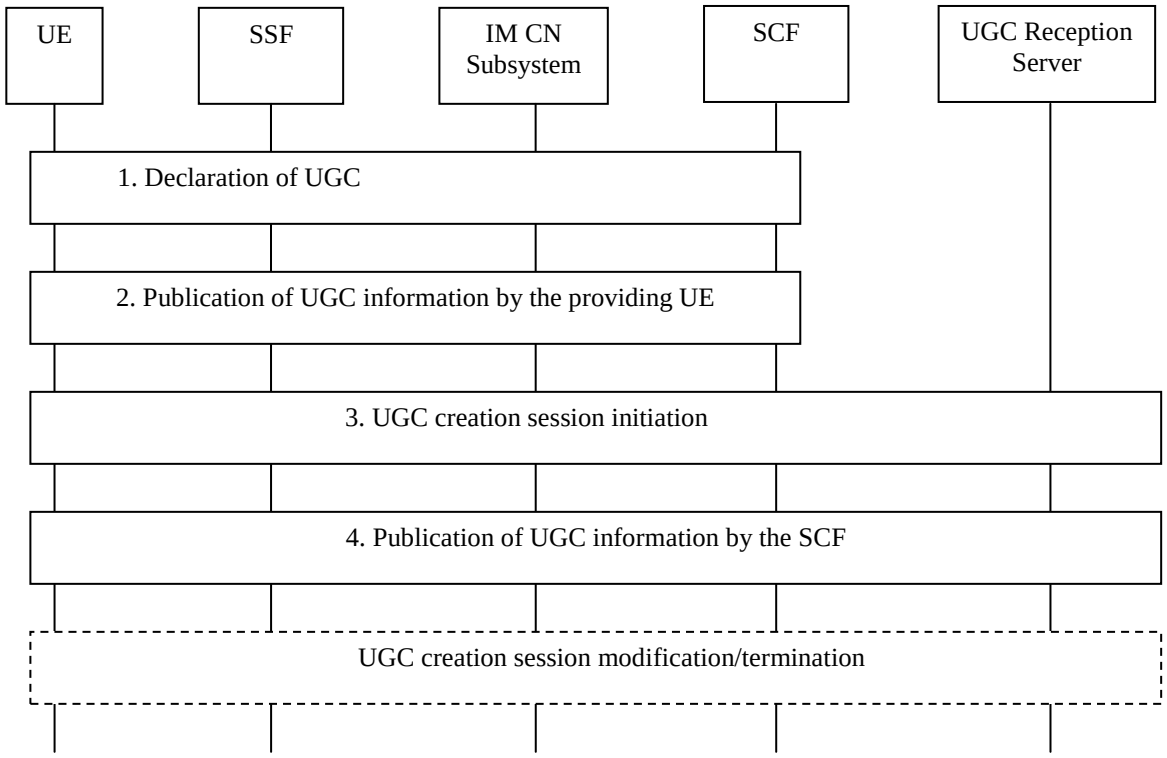

Figure 30 : IMS Based UGC Provision Procedures

NOTE: The UGC reception server can be implemented independent to, or within PSS Server, or BMSC.UPF.

Step 1: Declaration of UGC:

The providing UE sends a UGC declaration request to the SCF. The SCF records the UGC information, generates a unique UGC content ID and sends a UGC declaration response with the content ID to the providing UE.

NOTE: The content ID that should be used is out of scope of this release.

Step 2: Publication of UGC information by the providing UE:

The providing UE sends to the SCF a UGC description request including a UGC description, e.g. name, type, restriction, textual description, special group users etc. together with the UGC content ID.

The SCF records the UGC description, establishes the relationship between UGC content ID and UGC description, and sends UGC description response to the providing UE.

NOTE: Step 1 is always the first step. Step 2 may happen at any time during the UGC provision procedure and can be repeated during the lifetime of the content, e.g. for updating of the UGC description.

NOTE: The messages supporting steps 1 and 2 may be embedded in the messages supporting step 3.

Step 3: Creation of UGC:

User generated content could be provided for distribution by different means i.e. uploading and upstreaming from the providing UE.

Uploading should be used for user generated content that is stored at the UE. For uploading, HTTP should be used. 3GPP file format according to [39] should be supported.

Upstreaming should be used for live content that is continuously generated during upstreaming. For upstreaming, multimedia telephony service over IMS (MTSI) as defined in [38] should be used.

The SCF should signal the address of the UGC reception server to the providing UE.

In case of uploading, a HTTP connection is established and UGC is uploaded to a UGC upload reception server. In this case the upload reception server must support HTTP.

In case of upstreaming, the providing UE initiates a MTSI session and upstreams the UGC to the UGC upstreaming reception server. In this case, the upstreaming reception server must support MTSI specifications [38].

Step 4: Publication of UGC information by the SCF:

The SCF establishes the relationship between UGC content ID, UGC description and optionally UGC location (address), and publishes the UGC description information.

Step 4 may take place before, during or after step 3. In case of upstreaming, step 4 is carried out before step 3.

The UE can modify or terminate the established UGC creation session later on.

NOTE: Updating the SSF for UGC information from the SCF is required, but the method for achieving this is out scope of this specification.

13.2 UGC distribution procedure

The UGC reception server is responsible for repackaging and/or transcoding the uploaded or upstreamed content into such a form that can be served to legacy PSS servers and BMSCs. The UGC reception server is responsible for serving received UCG to legacy PSS Servers and BMSC in live and pre-recorded forms. This interface is out of scope for this release.

Content distribution is carried out using either PSS or MBMS. In case of PSS, UGC is distributed by the PSS server. In case of MBMS, UGC is distributed via the BMSC.UPF.

Distribution of user generated content to PSS and MBMS clients (receiving UEs) uses the same procedures for service provider discovery (clause 5), user service discovery (clause 6) and description retrieval (clause 7), streaming (clause 8) and download delivery as content that is provided in a different way.

14 MBMS Download Service

This section depicts the procedures for retrieval of missing parameters before session initiation in clause 14.1, the MBMS download session initiation, file repair and reception report procedures in clause 14.2, and session teardown procedure in clause 14.3.

14.1 Missing parameters before session initiation

14.1.1 Procedures at the UE

If the UE does not have the all the information it needs to form an SDP offer, the UE shall send a SIP OPTIONS message.

The "Request-URI" is related to the MBMS service that the user wants to activate. The "Request-URI" shall be composed of a user and domain part as defined as follows:

- The user part contains the serviceId.
- The domain part is the Service Provider domain name, obtained from SSF.

The TO header shall contain the same URI as in the "Request-URI" parameter.

The FROM header shall indicate the public user identity of the user.

Upon reception of the 200 OK including service access information encapsulated in multipart/MIME, the UE shall initiate MBMS download session as described in 14.2.

14.1.2 Procedures at the SCF

When receiving the SIP OPTIONS message, the SCF shall examine the serviceId present in the user-part of the TO header and lookup the requested User Service Description information.

The SCF shall answer with the user service description information of the content delivery channel (encapsulated in multipart/MIME) as requested by the serviceId.

14.2 MBMS Download Session Initiation, File Repair and Reception Report

14.2.1 General description

Figure 31 gives an overview about the procedures for an IMS based MBMS Download Session initiation, File-Repair and reception report.

If an associated delivery procedure description for File-Repair operations is available, then the UE receiver may use the File-Repair service as specified in [11] sub-clause 9.3.

If an associated delivery procedure description for reception reporting is available, then the UE shall provide reception reports as specified in [11] sub-clause 9.4.

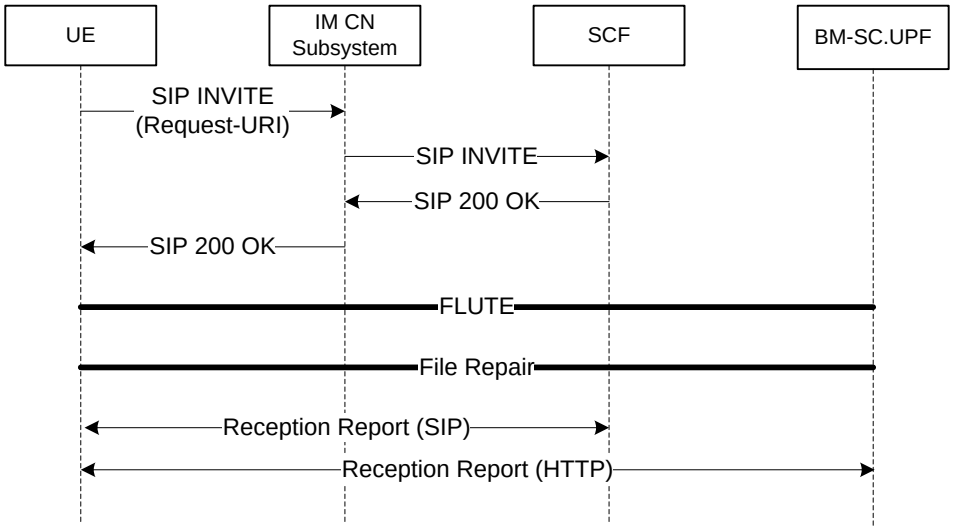

Figure 31 Procedures for IMS based MBMS Download

Step 1, 2: The UE generates an initial SIP INVITE message sent to the SCF, indicating the chosen MBMS Download Service. A SDP offer is included in the SIP INVITE message.

Step 3, 4: Upon receipt of SIP INVITE the SCF examine the SDP parameters in the SDP offer. In case of a successful examination, the SCF answers with a SIP 200 OK including the SDP answer.

Step 5: The UE receives the MBMS download data using FLUTE.

Step 6: In case of incomplete download, file repair procedures are executed.

Step 7, 8: The UE reports the reception statistics using either HTTP or SIP INFO message.

14.2.2 Procedures at the UE

The UE shall support the procedures specified in TS 24 229 [7] for originating sessions.

The UE shall generate an initial INVITE request:

- The Request-URI in the INVITE request shall be the well known PSI (Public Service Identifier) of the MBMS Download Service.
- The To header shall contain the same URI as in the Request-URI.
- The From header shall indicate the public user identity of the user.

An SDP offer shall be included in the request. The SDP offer shall be done in accordance with the parameters received during UE service selection procedure and with media capabilities and required bandwidth available for the MBMS download service. The SDP offer shall include the following elements:

- An a=source-filter line to indicate the IP source address of the FLUTE session.
- An a=flute-tsi line to indicate Transport Session ID (TSI) of the FLUTE session.

NOTE: The combination of the TSI and the IP source address identifies the FLUTE session.

- The m-line(s) shall be set to the media parameters retrieved via service selection procedures for the requested MBMS download service.
- The c-line(s) shall be set according to the multicast address retrieved via service selection procedures for the requested MBMS download service.

The descriptions of above parameters conform to section 7.3 of 3GPP TS 26.346[11].

- An a=mbms_download_service:ServiceId line to indicate the MBMS download service which the UE intends to initiate.

Once the UE receives the SIP response, the UE shall examine the FLUTE session parameters in the received SDP, and receive the MBMS download data accordingly.

In case the FDT is unavailable, the UE shall get the FDT according to fdt_address attribute in the SDP Answer. The FDT contains content description information for the files delivered in the FLUTE session.

In case of incomplete download, the UE shall execute the file repair procedures towards the repair server indicated by repair-server-address attribute in the SDP Answer. In the case the file repair procedures are to be conducted over broadcast/multicast delivery, the repair-server-address:uri should instead indicate the Session Description (SDP file) for the broadcast/multicast repair session and UE shall then use this URI to fetch the SDP and join the corresponding broadcast/multicast repair session.

The UE shall report the reception statistics using either HTTP or SIP INFO message according to report-channel parameter of the SDP Answer. The XML contents in the report message refer to section 9.5.3.2 of 3GPP TS 26.346[11].

14.2.3 Procedures at the IM CN Subsystem

The IM CN subsystem handles the SIP dialog as defined in 3GPP TS 23.228 [6].

14.2.4 Procedures at the SCF

The SCF shall support the procedures specified in TS 24.229 [7] applicable to an AS acting as a terminating UA.

Upon receipt of SIP INVITE request, the SCF shall perform service authorization procedures to check the service rights of requested MBMS download service according to the user subscription information, See clause 10.4.

The SCF shall examine the SDP parameters in the SDP offer.

- It shall examine the a=mbms_download_service parameter. This parameter contains the channel the UE intends to join. If the mbms_download_service parameter does not point to a channel that the UE is allowed to join the SCF shall not accept the offer and shall answer with a 403 error code.
- It shall examine the c-line(s) to determine that it is a multicast session. It may also check that it corresponds to the mbms_download_service parameter. If not, the SCF shall answer with a 403 error code.

If the SDP parameters are examined successfully, the SCF shall answer with a SIP 200 OK, indicating the SDP answer as follows:

- The m-line(s) and c-line(s) shall be identical to ones indicated in the SDP offer.
- The source-filter and flute-tsi attributes shall be identical to ones indicated in the SDP offer.
- An a=fdt_address:uri to indicate the address of the File Delivery Table.
- An a=repair-server-address:uri to indicate the address of the repair server. In the case the file repair procedures are to be conducted over broadcast/multicast delivery, the repair-server-address:uri should instead be the URI of the Session Description (SDP file) of the broadcast/multicast repair session.
- An a=report-channel:SIP/HTTP line to indicate to the UE that the reception report procedure should be performed by SIP or HTTP channel.
- It shall include an a=recvonly attribute.

14.2.5 Procedures at the BMSC.UPF

The MBMS FLUTE session is already ongoing at the BMSC.UPF. No specific action is required.

14.3 MBMS Download Session Teardown

14.3.1 General Description

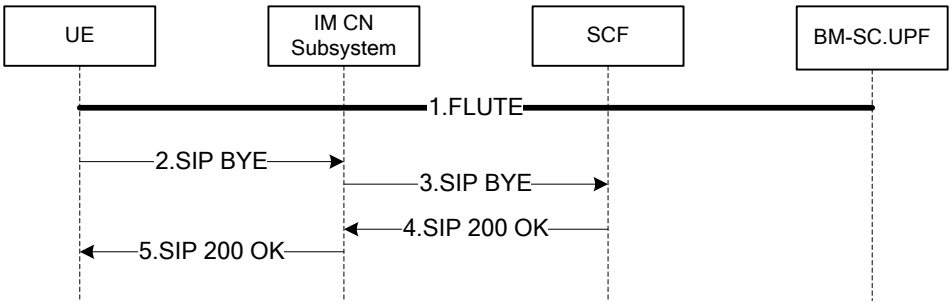

Figure 32: MBMS Download Session Termination

Step 1:UE receives download content from the BM-SC.UPF.

Step 2, 3: UE initiates a SIP BYE message to SCF, indicating which MBMS download session to close.

Step 4, 5: SCF responds UE with a SIP 200 OK message when the SIP BYE is successfully handled and session terminated. At this stage, the UE can stop receiving the MBMS download session.

The UE may deactivate the according MBMS Bearer Service during steps 2 to 5 or after step 5. The deactivation is either according to the MBMS Broadcast Service deactivation (3GPP TS 23.246 [4]) or the MBMS Multicast Mode deactivation procedure (3GPP TS 23.246 [4]).

14.3.2 Procedures at the UE

The UE shall send a SIP BYE to the SCF.

The UE may deactivate the according MBMS Bearer Service during steps 2 to 5 or after step 5 of clause 8.3.5.1. The deactivation is either according to the MBMS Broadcast Service deactivation (3GPP TS 23.246 [4]) or the MBMS Multicast Mode deactivation procedure (3GPP TS 23.246 [4]).

14.3.3 Procedures at the IM CN Subsystem

The IM CN subsystem handles the SIP dialog as defined in 3GPP TS 23.228 [6].

14.3.4 Procedures at the SCF

The SCF responds to the UE with a SIP 200 OK message after handling of the SIP BYE message.

14.3.5 Procedures at the BMSC.UPF

The BMSC.UPF is acting as described in 3GPP TS 23.246 [4].

15 PSS download service

15.1 General Description

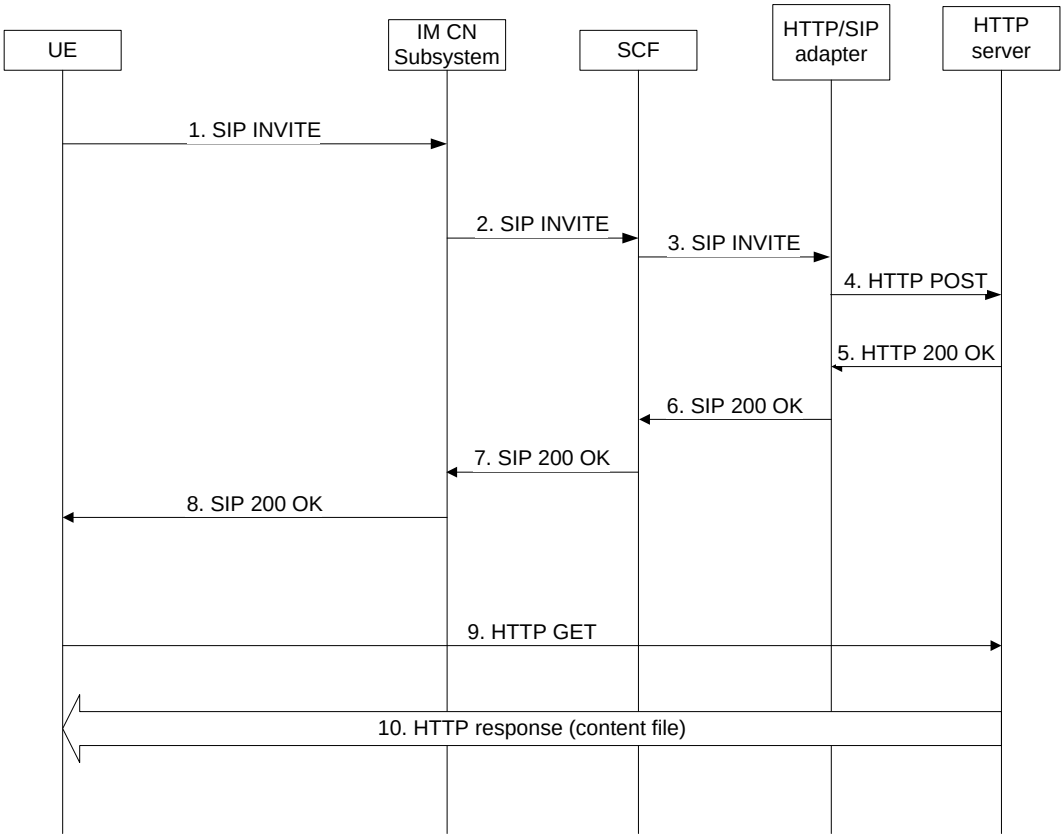

Figure 33: IMS based session set-up for progressive download

1. The UE initiates the progressive download session by sending SIP INVITE to the IM CN subsystem, including an SDP offer.
2. The IM CN subsystem forwards the SIP INVITE message to the SCF.

3. The SCF verifies the user rights for the requested content, selects a HTTP/SIP adapter, and forwards the SIP INVITE message to the HTTP/SIP adapter.
4. The HTTP/SIP adapter selects a HTTP Server, and sends an HTTP POST message to the HTTP server, including the IP address of the UE.
5. The HTTP server answers to the HTTP/SIP adapter with a HTTP 200 OK response.
6. The HTTP/SIP adapter sends the SIP 200 OK answer to the SCF, including download URL of the requested content file in the SDP answer.
7. The SCF forward the SIP 200 OK to the IM CN subsystem.
8. The IM CN subsystem forwards the SIP 200 OK to the UE.
9. The UE sends HTTP request to the URL obtained from the SIP 200 OK message.
10. The HTTP server delivers the content file in the HTTP response to the UE.

15.2 Procedures at the UE

The UE initiates the progressive download session by sending SIP INVITE to the IM CN subsystem. The content of the SIP INVITE shall be as follows:

- The Request URI is related to the session the user wants to activate The Request-URI shall be composed of a user and domain part as defined as follows:
  - The user part contains the content identifier, retrieved from user service description information from SSF
  - The domain part is the Service Provider domain name, obtained from SSF.
- The To header shall contain the same URI as in the Request URI.
- The From header shall indicate the public user identity of the user.

The content identifier shall be retrieved from service selection information.

The other headers shall be set according to 24.229 [7].

An SDP offer shall be included in the initial INVITE request, in accordance with media capabilities and policies available for the PSS session and with the parameters received from the SSF during service selection procedure or during the procedure for retrieving missing parameters by SIP OPTIONS.

The SDP media parameters should describe the HTTP progressive download session. The differences with the SDP offer defined for streaming is the absence of media line corresponding to the control protocol (RTSP), and the indication of TCP transport and HTTP progressive download method instead of streaming in "m" line.

The SDP parameters for the HTTP progressive download channel shall be set as follows:

- a 'm' line for an HTTP progressive download channel of format: m=<media> <port> <transport> <fmt>
  - The media field shall have a value of "application".
  - The port field shall be set to a value of 9, which is the discard port. See RFC 4145 [13] and RFC 4572 [14].
  - The transport field shall be set to TCP or TCP/TLS. The former is used when HTTP runs directly on top of TCP and the latter is used when HTTP runs on top of TLS, which in turn runs on top of TCP.
  - The <fmt> parameter shall be included and shall be set to *3gpp_http*.

NOTE: the *3gpp_http* application format should have a new MIME subtype registered in IANA.

  - An "a=setup" attribute shall be present and set to "active" indicating that the UE will initiate an outgoing TCP connection to the HTTP Server.

- An "a= connection" attribute shall be present and set as "new" indicating that the UE will establish a new outgoing TCP connection towards the HTTP Server.
- A "c" line shall include the network type with the value set to IN, the address type set to IP4 or IP6 and IP address of the flow of the related HTTP progressive download channel (ex. `c=IN IP4 <IP_ADDRESS>`).
- Optionally a "b=" line may contain the proposed bandwidth. If the user has fetched the bandwidth required for this particular content delivery channel during service selection retrieval, the bandwidth attribute at media level shall be set to this value. Otherwise, this attribute shall be set to a pre-configured value; (ex. b=AS:15000)

An example of the SDP offer for IMS-based PSS progressive download is:

```
v=0
o=bob 2890844527 2890844527 IN IP4 192.0.2.2
s=Download Session
i=A download session declared within the session description protocol
t=0 0
m=application 9 TCP 3gpp_http
a=connection:new
a=setup:active
c= IN IP4 192.0.2.2
b=AS:15000
```

Once the UE has received the SIP 200 OK from the HTTP/SIP adapter, it sends the HTTP GET request to the URL obtained in download session description. The HTTP “Connection” header shall be set to “Keep-Alive” to require persistent TCP connection.

An example of the HTTP GET request sent by the UE is:

HTTP GET http://123.23.23.23/ movie1.mpeg

15.3 Procedures at the IM CN subsystem

The IM CN subsystem shall forward the SIP INVITE to the SCF.

Upon reception of the SIP 200 OK from the SCF, the IM CN subsystem forwards the SIP 200 OK to the UE.

The IM CN Subsystem handles the SIP dialog as defined in 3GPP TS 23.228 [6].

15.4 Procedures at the SCF

Upon reception of the SIP INVITE from the UE, the SCF checks the user rights for the requested content, identifies that the request is for progressive download, selects and forwards the SIP request to the HTTP/SIP adapter which is in charge of the download service by changing the "Request-URI" accordingly.

When receiving a 301 or 302 response from the HTTP/SIP adapter, the SCF shall not forward this message to the UE.

15.5 Procedures at the HTTP/SIP adapter

Upon reception of the download session initiation request, the HTTP/SIP adapter shall examine the content identifier present in the user-part of the To header and the media parameters in the SDP, selects a HTTP Server according to the Request URI, and sends a HTTP POST message to the HTTP server including the IP address of the UE.

The HTTP/SIP adapter may decide to redirect the request to another HTTP/SIP adapter server. In this case the HTTP/SIP adapter shall return a 301 response if the content is not managed by this HTTP/SIP adapter or 302 response for any other reasons (e.g. load balancing). The redirecting HTTP/SIP adapter indicates one or more destination HTTP/SIP adapter addresses in the Contact header.

The HTTP/SIP adapter returns the SIP 200 OK message to the SCF, including the SDP answer. The SDP answer should describe the HTTP progressive download session. The differences with the SDP answer defined for streaming is the

absence of media line corresponding to the control protocol (RTSP), the indication of TCP transport and HTTP progressive download method instead of streaming in "m" line, the indication of HTTP URL instead of RTSP URI.

If the content that the user has selected cannot be found the HTTP/SIP adapter shall reply with appropriate, SIP error code 404 Not Found response.

The HTTP/SIP adapter shall construct the SIP 200 OK message as follows:

- an 'm' line for an HTTP progressive download channel of format: m=<media> <port> <transport> <fmt>
  - The media field shall have a value of "application".
  - The port field shall be set to the value of HTTP Server for the progressive download channel, such as 80.
  - The transport field shall be set to TCP or TCP/TLS. The former is used when HTTP runs directly on top of TCP and the latter is used when HTTP runs on top of TLS, which in turn runs on top of TCP.
  - The fmt field shall be identical to the one received in the SDP offer.
- a "c" line shall include the network type with the value set to IN, the address type set to IP4 or IP6 and IP address of HTTP Server for the flow of the related HTTP progressive download channel (e.g. `c=IN IP4 <IP_ADDRESS>`).
- The "a=setup" attribute shall be present and set to 'passive' indicating that connection shall be initiated by the other endpoint (UE).
- An "a= connection" attribute shall be present and set as "new" indicating that the UE will establish a new outgoing TCP connection towards the HTTP Server.
- One or more a=fmtp lines representing HTTP specific attributes set as follows:
  - a "fmtp:3gpp_http http-url" attribute in the format of an absolute URI to be used for the UE in the subsequent HTTP requests. The h-uri can be in form of absolute or relative URI. If absolute URI is specified then it is used as-is in subsequent HTTP requests. If relative URI is specified in form of a media path, then the HTTP absolute URI could be constructed by the UE using the IPAddress (from c-line) and port (from m-line) as the base followed by h-uri value for the content path.
- the "b=" line shall contain the proposed bandwidth. Since the content download is unidirectional the bandwidth shall be set to 0.`(ex. b=AS:0)`.

An example of the SDP answer in the SIP 200 OK response is:

```
v=0
o=bob 2890844527 2890844527 IN IP4 192.0.2.1
s=Download Session
i=A download session declared within the session description protocol
t=0 0
m=application 80 TCP 3gpp_http
a=connection:new
a=setup:passive
a=fmtp 3gpp_http h-url http://operator.com/movie1.mpeg
c=IN IP4 192.0.2.1
b=AS:0
```

15.6 Procedures at the HTTP server

Upon reception of the HTTP POST message received from the HTTP/SIP adapter, the HTTP server answers with an HTTP 200 OK message to the HTTP/SIP adapter.

Upon reception of the HTTP GET received from the UE, the HTTP server delivers in the HTTP response the content file corresponding to the URL obtained in the received HTTP GET. The HTTP “Connection” header shall be set to “Keep-Alive” to indicate it is a persistent TCP connection.

15.7 Session termination

15.7.1 General description

15.7.1.1 UE-initiated PSS download session teardown

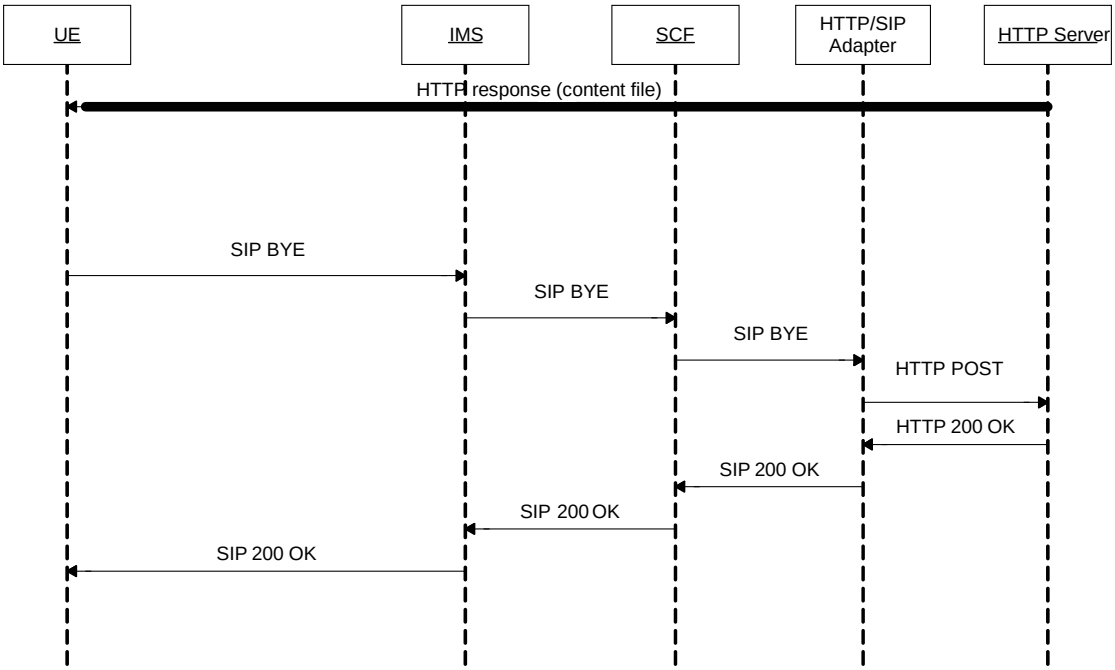

Figure 33a: UE-initiated IMS PSS download session termination

Here the case of UE termination is described. The following steps are carried out:

1. The UE sends a SIP BYE message.
2. The IM CN subsystem forwards the SIP BYE message to the SCF.
3. The SCF sends the SIP BYE message to the HTTP/SIP adapter.
4. The HTTP/SIP adapter sends an HTTP POST to the HTTP server.
5. In case the HTTP Server is transmitting the content file, it stops sending data for this session. The HTTP server sends a HTTP 200 OK to the HTTP/SIP adapter.
6. The HTTP/SIP adapter sends a SIP 200 OK to the UE via SCF and IM CN subsystem.

15.7.1.2 SCF-initiated PSS download session teardown

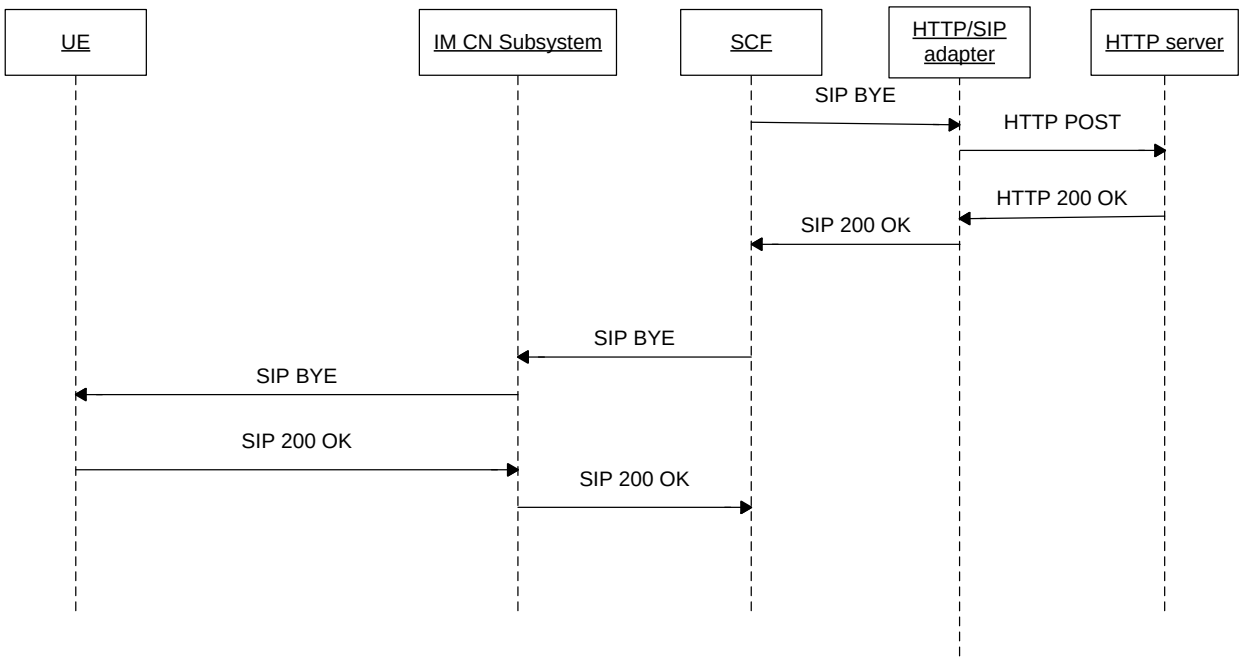

Figure 33b: SCF-initiated IMS PSS download session termination

Here the case of the SCF-initiated teardown procedure is described. The following steps are carried out:

1) The SCF sends a SIP BYE to the HTTP/SIP adapter.

2) The HTTP/SIP adapter sends HTTP POST message to the HTTP server.

3) The HTTP server sends the HTTP 200 OK message to the HTTP/SIP adapter.

4) The HTTP/SIP adapter sends the SIP 200 OK message to the SCF.

5) Upon receipt of the SIP 200 OK, the SCF sends the SIP BYE message to the IM CN subsystem.

6) The IM CN Subsystem forwards the SIP BYE message to the UE.

7) The UE sends a SIP 200 OK message to the IM CN Subsystem.

8) The IM CN Subsystem forwards the SIP 200 OK to the SCF.

15.7.1.3 HTTP/SIP adapter-initiated PSS download session teardown

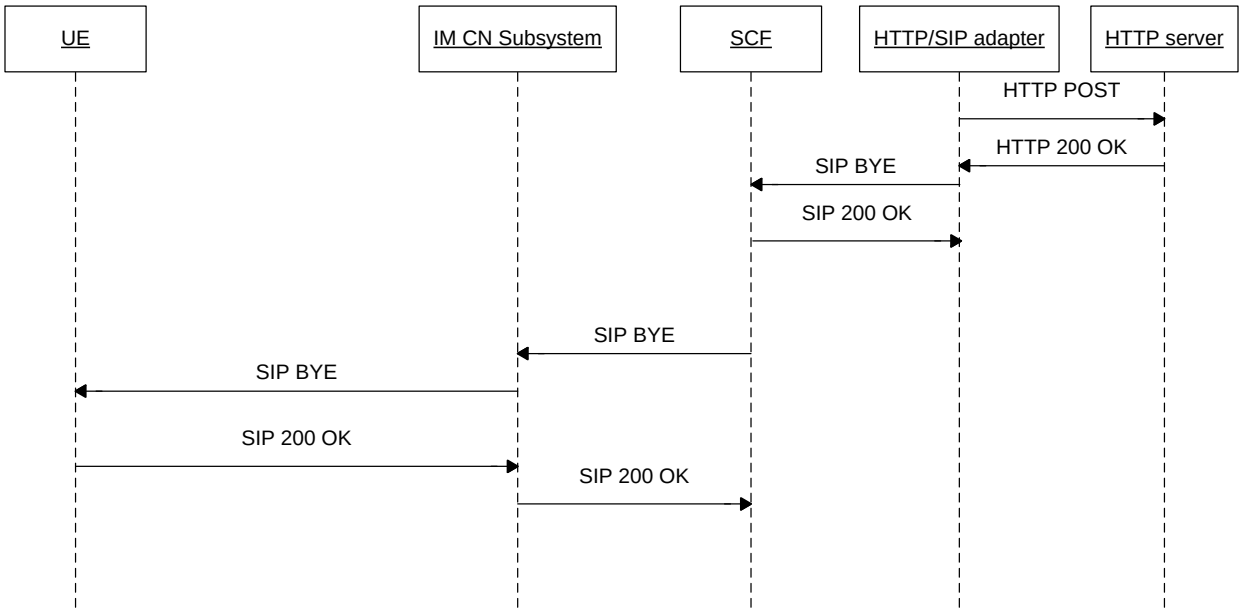

Figure 33c: HTTP/SIP adpater-initiated IMS based session teardown for PSS download

Here the case of the SCF-initiated teardown procedure is described. The following steps are carried out:

1) The HTTP/SIP adapter sends the HTTP POST to the HTTP server.

2) The HTTP server sends the HTTP 200 OK to the HTTP/SIP adapter.

3) The HTTP/SIP adapter sends the SIP BYE message to the SCF.

4) The SCF sends the SIP 200 OK message to the HTTP/SIP adapter.

5) The SCF sends the SIP BYE message to the IM CN Subsystem.

6) The IM CN Subsystem forwards the SIP BYE message to the UE.

7) The UE sends a SIP 200 OK message to the IM CN Subsystem.

8) The IM CN subsystem forwards the SIP 200 OK message to the SCF.

15.7.2 Procedures at the UE

15.7.2.1 UE-initiated PSS download session teardown

To teardown the PSS download session, the UE shall send a SIP BYE message to the SCF.

15.7.2.2 Network-initiated PSS download session teardown

Upon receipt of the SIP BYE message, the UE shall the SIP 200 OK message to the SCF. The UE procedes to release the associated resources held for the PSS session.

15.7.3 Procedures at the IM CN Subsystem

The IM CN subsystem handles the SIP dialog as defined in [6].

15.7.4 Procedures at the SCF

15.7.4.1 UE-initiated PSS download session teardown

Upon receipt of a SIP BYE message the SCF shall forward it to the HTTP/SIP adapter.

15.7.4.2 SCF-initiated PSS download session teardown

The SCF initiates the PSS download session teardown by sending a SIP BYE message to theHTTP/SIP adapter. Upon receipt of the SIP 200 OK from the HTTP/SIP adapter, the SCF shall send a SIP BYE message to the UE.

15.7.4.3 HTTP/SIP adapter-initiated PSS download session teardown

Upon receipt of the SIP BYE message received from the HTTP/SIP adapter, the SCF sends the SIP 200 OK message to the HTTP/SIP adapter. Then the SCF forwards the SIP BYE message to the UE.

15.7.5 Procedures at the HTTP/SIP adapter

15.7.5.1 UE-initiated PSS download session teardown

Upon receipt of a SIP BYE message from the SCF the HTTP/SIP adapter shall send a HTTP POST message to the HTTP Server.

Upon receipt of a HTTP 200 OK message from the HTTP server, the HTTP adapter shall send a SIP 200 OK message to the SCF.

15.7.5.2 SCF-initiated PSS download session teardown

Upon receipt of the SIP BYE message, the HTTP/SIP adapter sends the HTTP POST message to the HTTP server. Upon receipt of the HTTP 200 OK message from the HTTP server, the HTTP/SIP adapter sends the SIP 200 OK to the SCF.

15.7.5.3 HTTP/SIP adapter-initiated PSS download session teardown

The HTTP/SIP adapter sends the HTTP POST to the HTTP server. Upon receipt of the HTTP 200 OK, the HTTP/SIP adapter sends the SIP BYE messge to the SCF.

15.7.6 Procedures at the HTTP server

Upon receipt of a HTTP POST from the HTTP/SIP adapter, the HTTP server shall stop still on-going data transmissions and send a HTTP 200 OK message to the HTTP/SIP adapter.

16 Inter UE Session Transfer

16.0 Introduction

Inter UE Session transfer (IUT) is used for the transfer or replication of an ongoing PSS session from a transferor UE (UE-1) to a transferee UE (UE-2). IUT includes the transfer of the session control as well as the media flows.

UE-1 and UE-2 are under the same user subscription and are served by the same SCF.

Inter UE Session transfer follows the general Inter UE session transfer procedures as defined in [40] and [41].

NOTE 1: Functionality of SCC AS [40] for Inter UE transfer can be implemented by the SCF.

In the push mode, the session transfer is initiated by UE-1. In the pull mode, the session transfer is initiated by UE-2.

16.1 Push mode

UE-1 is involved in an IMS session with the PSS server. The information flow in Figure 34 shows the transfer of the session from UE-1 to UE-2. The grey boxes refer to the session transfer procedures as defined in clause 15 of [41].

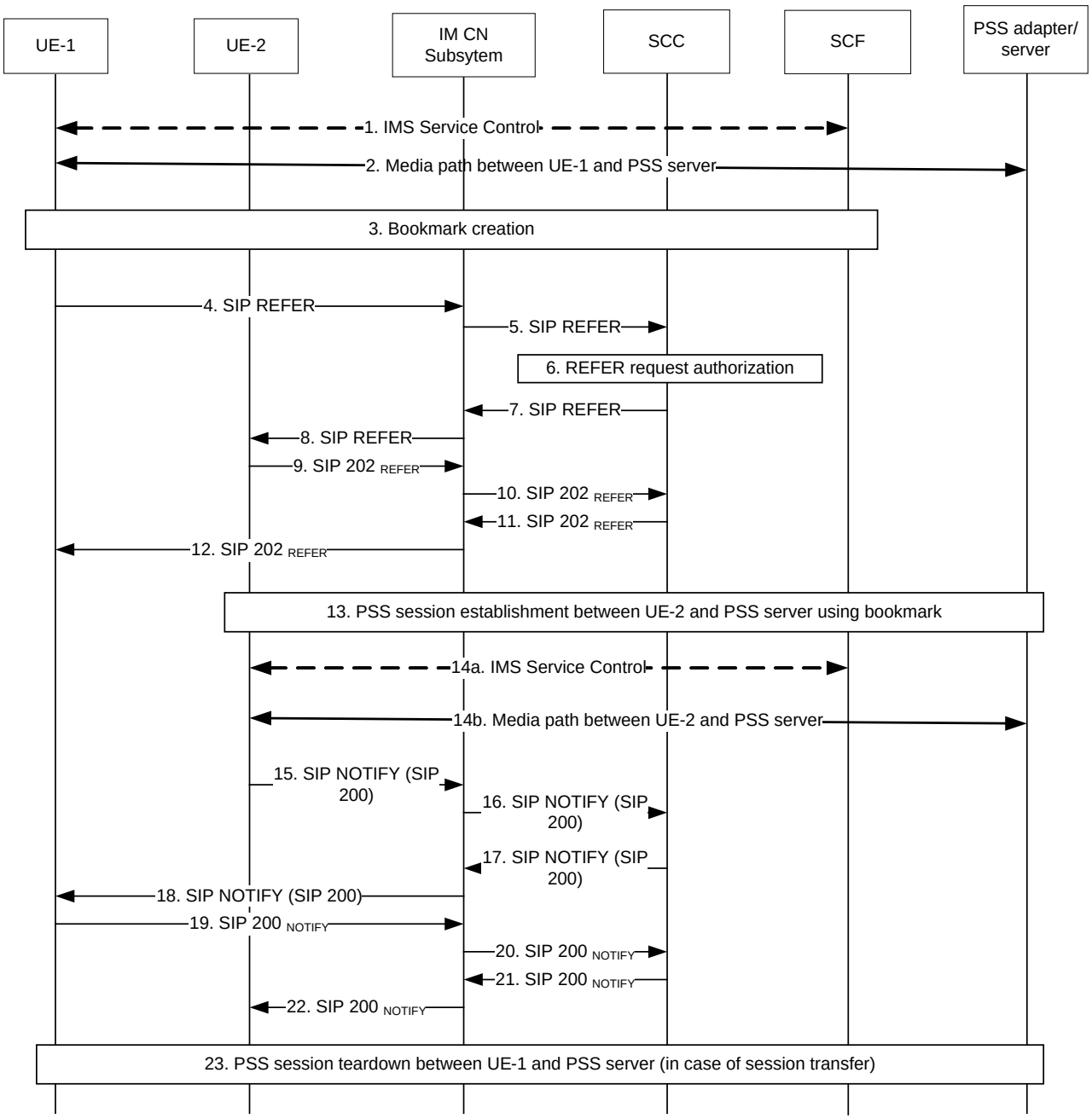

Figure 34: Inter UE session transfer (push mode)

Note: This sequence is simplified and does not e.g. show session progress messages

1.-2. UE-1 is in a IMS controlled PSS session with PSS server receiving a media stream.

3. UE-1 may initiate nBookmark procedure according to clause 12.1.

NOTE: When a media session is replicated from UE-1 to UE-2, it may be needed that the media presentation on the two UEs is synchronized for good user quality of experience. In order to obtain synchronized playout with UE-2, UE-1 may include "suggestedPresentationOffset" in the bookmark. "suggestedPresentationOffset" specifies an offset in time from the bookmark created time to the bookmark presentation time at UE1.

4.-5. SIP REFER request initiating the inter UE transfer to UE-2 is sent from UE-1 to SCC

The SIP REFER request shall follow the procedures in [41] section 15.

Additionally, the Refer-To header shall be extended by a To header field which includes the original content identifier copied from the Request URI of the original SIP INVITE request initiated from the transferor.

Further a body header that contains the SDP body to be included in the PSS session initiation request initiated from the transferee UE. The SDP body shall contain the same number of media lines as the SDP used in the original PSS session from the transferor. Each media line shall indicate the same media type as its corresponding media component in the SDP used in the original session by the transferor UE.

The body of the REFER request shall include the bookmark as defined in Annex J.

If step 3 is carried out, the bookmark may be not present. In this case, an identifier of the stored bookmark is included.

NOTE: Before initiation of IUT, UE 1 may discover UE-2, e.g. by presence service, which is out of scope of TS 26.237.

6. The SCC authorizes the request and if authorization is passed successfully, the SCC forwards the SIP REFER request further.

7.-8. SIP REFER request (SCC to UE-2).

9.-12. SIP 202 response to the SIP REFER request (UE-2 to UE-1).

13. PSS session initiation using the bookmark according to clause 12.2.2.

NOTE: In order to obtain synchronized media playout with UE-1, when the media session is replicated on UE-2, at time *T* (in the wall-clock time), UE-2 may present the media unit with an offset equal to *T – bookmarkcreated time + bookmark offset - suggestedPresentationOffset* from the beginning of the program.

14. UE-2 is in an IMS controlled PSS session with PSS server.

The media path is now established between UE-2 and PSS server and the IMS service control between UE-2 and SCC AS.

15.-18. SIP NOTIFY request (UE-2 to UE-1 over intermediate IM CN subsystem entities and SCC).

The UE-2 generates the SIP NOTIFY request carrying the message/sipfrag body and sends it towards UE-1.

19.-22.SIP 200 OK response to the SIP NOTIFY request (UE-1 to UE-2 over intermediate IM CN subsystem entities and SCC).

23. In case of session transfer, a PSS session teardown between UE-1 and PSS server according to clause 8.2.6.1.1 is executed. In case of session replication, no PSS session teardown between UE-1 and PSS server is executed. The streaming session between UE-1 and PSS server should be still ongoing.

16.2 Pull mode

UE-1 is involved in an IMS session with the PSS server. The information flow in Figure X shows the transfer of the session from UE-1 to UE-2. The grey boxes refer to the session transfer procedures as defined in sub-clause 27.2 of [41].

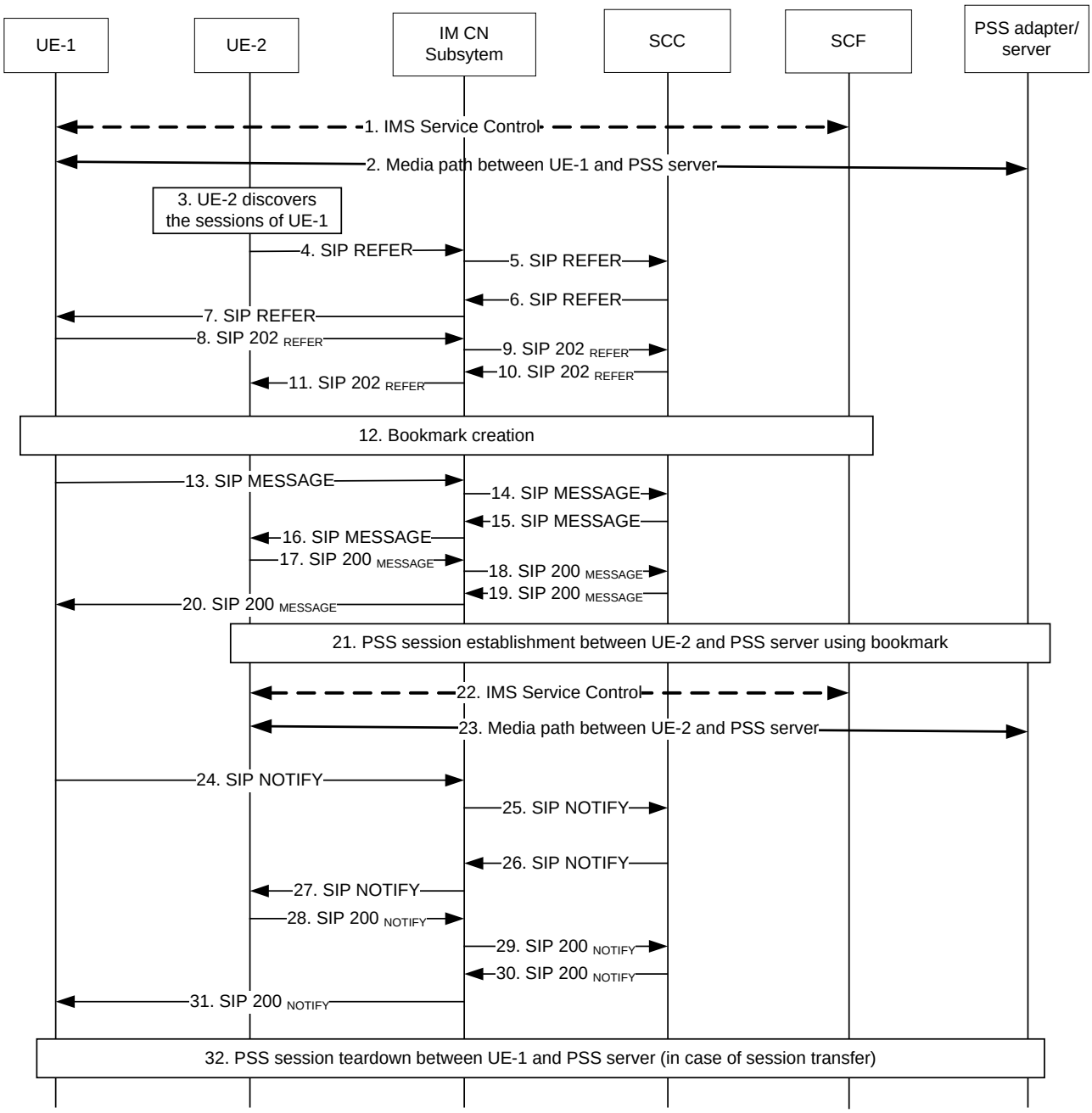

Figure 35: Inter UE session transfer (pull mode).

NOTE: This sequence is simplified and does not e.g. show session progress messages

1.-2. UE-1 is in a IMS controlled PSS session with PSS server receiving a media stream.

3. UE-2 discovers the sessions of UE-1 as defined in clause 21 of [41].

4.-7. SIP REFER request (UE-2 to UE-1)

The UE-2 sends SIP REFER request to UE-1 to request a bookmark.

8.-11. SIP 202 (Accepted) response for the SIP REFER request (UE-1 to UE-2)

12. UE-1 may initiate nBookmark procedure according to clause 12.1.

NOTE: When a media session is replicated from UE-1 to UE-2, it may be needed that the media presentation on the two UEs is synchronized for good user quality of experience. In order to obtain synchronized playout with UE-2, UE-1 may include "suggestedPresentationOffset" in the bookmark. "suggestedPresentationOffset" specifies an offset in time from the bookmark created time to the bookmark presentation time at UE1.

13.-16. SIP MESSAGE request (UE-1 to UE-2)

Based on the received SIP REFER request, the UE-1 generates a SIP MESSAGE request.

The body of the MESSAGE request shall include the bookmark as defined in Annex J.

If step 3 is carried out, the bookmark may be not present. In this case, an identifier of the stored bookmark is included.

17.-20. SIP (200) OK response to SIP MESSAGE request (UE-2 to UE-1)

21. PSS session initiation using the bookmark according to clause 12.2.2. The timestamp information in the bookmark may be ignored in case of live session initiation.

NOTE: In order to obtain synchronized media playout with UE-1, when the media session is replicated on UE-2, at time *T* (in the wall-clock time), UE-2 may present the media unit with an offset equal to *T – bookmarkcreated time + bookmark offset - suggestedPresentationOffset* from the beginning of the program.

22.-23. UE-2 is in a IMS controlled PSS session with PSS server receiving a media stream.

24.-27. SIP NOTIFY request (UE-1 to UE-2)

The UE-1 informs the UE-2 that the action triggered by SIP REFER request was successfully completed.

28.-31. SIP 200 (OK) response to SIP NOTIFY request (UE-2 to UE-1)

32. In case of session transfer, a PSS session teardown between UE-1 and PSS server according to clause 8.2.6.1.1 is executed. In case of session replication, no PSS session teardown between UE-1 and PSS server is executed. The streaming session between UE-1 and PSS server should be still ongoing.

17 Parental Control Service

Parental Control provides parents the method to help protect their children and set restrictions while consuming PSS/MBMS user services. During PSS/MBMS Session initialization, Preventive Parental Control is executed either based on the user's (child's) profile and the minimum allowed age for the content, as specified in section 17.1. The parents can also temporarily block or allow a program for his/her child, as specified in section 17.2, referred as Interactive Parental Control.

The user's profile contains the user's age and the parents' parental control policy. The parental control policy includes allowed program list (white list) and forbidden program list (black list). The minimum allowed age for the content is the minimum age of the user who is allowed to watch the said content. The minimum allowed age is signalled in the service selection information by various content rating schemas.

17.1 Preventive Parental Control

17.1.1 Parental Control during PSS Session initialization

17.1.1.1 Procedure at UE

The UE SHALL support the procedure specified in sub-clause 8.2.3.2.

Upon receiving a 403 response from SCF, the UE may issue an SIP request to get the program allowed by his/her parents, as specified in sub-clause 17.2.2.

17.1.1.2 Procedure at SCF

The SCF SHALL support the procedure specified in sub-clause 8.2.3.4, with the following additions:

After checking the rights of the requested PSS service, the SCF shall further check the parental control information of the requester, by comparing the user's profile and the minimum allowed age of the request program:

- If the minimum allowed age is lower or equal to the child's age and the program is not in the list of forbidden programs, then the SCF shall continue the PSS session initialization as specified in sub-clause 8.2.3.4;
- If the minimum allowed age is higher than the child's age but the program is in the list of allowed programs, then the SCF shall continue the PSS session initialization as specified in sub-clause 8.2.3.4;
- If the minimum allowed age is higher than the child's age and the program is not in the list of allowed programs then the SCF shall respond the UE with a 403 error code;
- If the program is in the list of forbidden programs then the SCF shall respond the UE with a 403 error code.

17.1.1.3 Procedure at PSS Adapter

The PSS Adapter shall support the procedure specified in sub-clause 8.2.3.5.

17.1.2 Parental Control during MBMS Session initialization

17.1.2.1 Procedure at UE

The UE shall support the procedure specified in sub-clause 8.3.3.2.

Upon receiving a 403 response from SCF, the UE may issue an SIP request to get the program allowed by his/her parents, as specified in sub-clause 17.2.2.

17.1.2.2 Procedure at SCF

The SCF shall support the procedure specified in sub-clause 8.3.3.4, with the following additions:

After performing service authorization procedures to check the service rights of requested MBMS service, the SCF shall further check the parental control information of the requester, by comparing the user's profile and the minimum allowed age of the request program:

- If the minimum allowed age is lower or equal to the child's age and the program is not in the list of forbidden programs, then the SCF shall continue the MBMS session initialization as specified in sub-clause 8.3.3.4;
- If the minimum allowed age is higher than the child's age but the program is in the list of allowed programs, then the SCF shall continue the MBMS session initialization as specified in sub-clause 8.3.3.4;
- If the minimum allowed age is higher than the child's age and the program is not in the list of allowed programs then the SCF shall respond the UE with a 403 error code;
- If the program is in the list of forbidden programs then the SCF shall respond the UE with a 403 error code.

17.2 Interactive Parental Control service

17.2.1 Blocking

17.2.1.1 General Description

Following is a general call flow for blocking the child from a program:

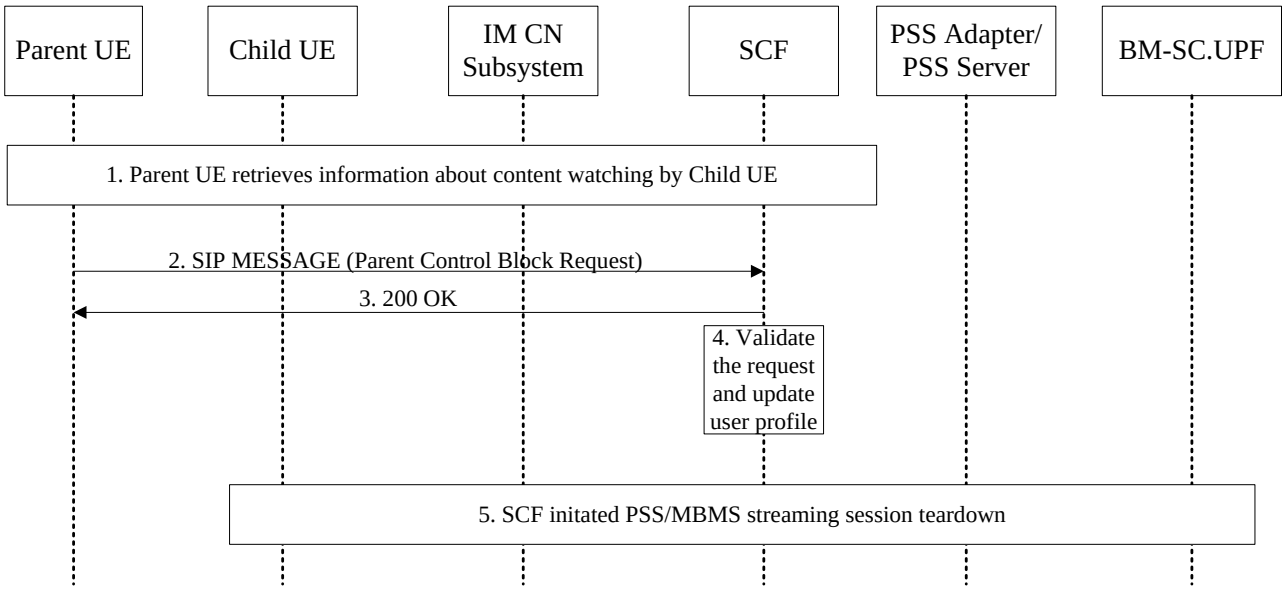

Figure 36: Interactive Parental Control Service--Blocking

1 The Parent UE retrieves information about the content which is being watched by Child UE. This is achieved by the procedure defined in section 11, Blending of Presence and PSS/MBMS user services.

2 When the parent identifies that the watched content is not suitable for the child, the Parent UE issue a SIP MESSAGE to SCF, including necessary information (content identity, identities of parent and child).

3 The SCF feedback with 200 OK.

4 The SCF validates the parental control request. If the request is valid, the SCF then update the controlled use's profile

5 If the request is valid, the SCF initiates the PSS/MBMS streaming session teardown procedure.

17.2.1.2 Procedure at Parent UE

When the parent wants to block the program the child is watching, the UE of the parent shall issue a SIP MESSAGE request for Parental Control. The content of the parental control request is:

- The request-URI shall be set to the well-known PSI for parental control service;
- The From header shall be set to the public user identity of the parent;
- The To header shall be set to the public user identity of the child;
- The content-type shall be set to "application/3gpp-ims-pss-mbms-parental-control+xml";
- The message body shall include a XML document conforming to the schema defined in Annex L, wherein the PCBlockRequest shall be presented with the following parameters:
    - ChildUserID: the public user identity of the child, whom will be blocked.
    - PatentUserID: the public user identity of the parent, who initiates the blocking.
    - ProgramID: the identifier of the content being blocked by the parent.

17.2.1.3 Procedure at SCF

Upon receipt of a SIP MESSAGE request for Parental Control from the UE via the IM-CN Subsystem, the SCF shall identify the Content-Type associated with the MESSAGE request to determine that it is a Parental Control request.

Following that the SCF shall extract the parental control information and check whether the parent has the rights to perform Parental Control on the child.

If the parent has the rights to perform Parental Control on the child, the SCF shall update the child's profile with adding a forbidden program. Following that, the SCF initiates the PSS streaming teardown procedure as specified in section 8.2.6.1 or MBMS streaming teardown procedure as specified in sub-clause 8.3.5.

17.2.2 Allowing

17.2.2.1 Allowing in PSS Session Initialization

17.2.2.1.1 General Description

Following is a general call flow for allowing a PSS user service requested by the child:

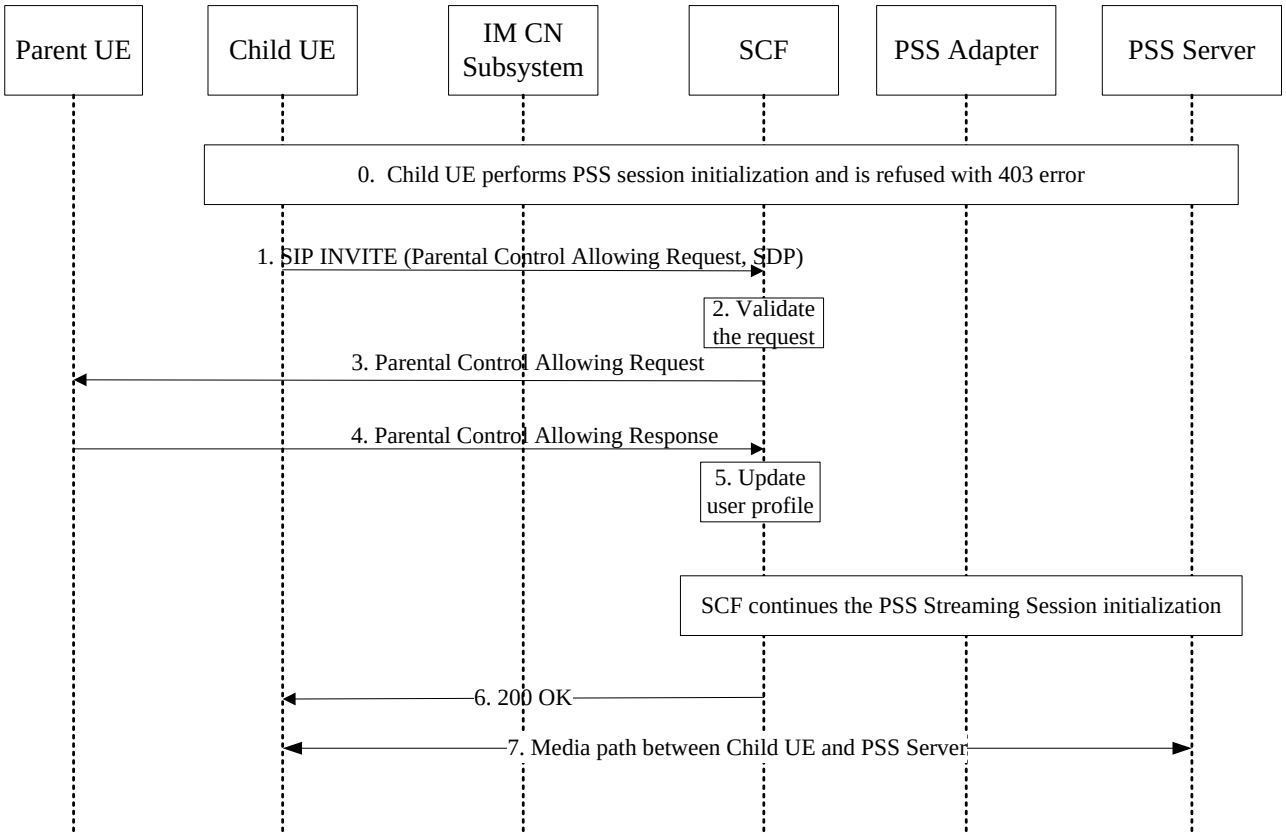

Figure 37: Interactive Parental Control Service—Allowing a PSS user service

0 (Optional) the Child UE initiates a PSS session and is refused with 403 error.

1 The Child UE performs PSS session initialization with Parental Control Allowing Request, to request the Parent UE to allow him watching the program.

2 Upon receiving a PSS session initialization request as well as a Parental Control Allowing Request, the SCF shall validate the request.

3~4 The SCF send a Parental Control Allowing Request to the parents and the parent feedback its decision. The parent should make his decision based on service selection information related the program. Notes that this step can be done by either SIP MESSAGE message over IMS, or other means like SMS over mobile network.

5 Upon receiving the Parental Control Allowing response, the SCF shall update the user's (child's) profile according to the parents' decision.

6 If the parents decide to allow the child to watch the requested program, the SCF performs PSS session initialization; otherwise the SCF shall reject the session initialization request with a 403 error.

7 Upon receiving 200 OK, the Parent UE setup the media path between the PSS server accordingly.

17.2.2.1.2 Procedure at Child UE

The Child UE shall support the procedure specified in section 8.2.3.2.

To acquire parents' permission to watch the program, the message body of session initialization request shall also include a XML document as Parental Control Allowing Request. The XML document shall conform to the schema as defined in Annex L, with the following additions:

- The XML document shall be "application/3gpp-ims-pss-mbms-parental-control+xml"
- In the XML document, the PCAllowingRequest shall be presented with the following parameters:
    - ChildUserID: the public user identity of the child, whom will be blocked.
    - PatentUserID: the public user identity of the parent, who initiates the blocking.
    - ProgramID: the identifier of the content being blocked by the parent.

17.2.2.1.3 Procedure at Parent UE

Upon receiving a SIP MESSAGE, the Parent UE shall identify it is a parental control request by the Content Type in the message header and feedback 200 OK response immediately. Following that the Parent UE shall extract the parent control request information.

To accept the Parent Control Allowing Request, the Parent UE shall not change the XML document and send it back in a SIP MESSAGE message to the SCF.

To refuse the Parent Control Allowing Request, the Parent UE shall delete the ProgramID in the XML document and send it back in a SIP MESSAGE message to the SCF.

17.2.2.1.4 Procedure at SCF

The SCF shall support the procedure specified in section 17.1.1.3, with the following addition:

If there is a Parent Control Allowing request XML document, the SCF shall extract the parental control information. Following that, the SCF shall forward the request to the Parent UE according to the request and waiting for the response. This can be done either by SIP MESSAGE exchange, or by other means like SMS over mobile network which is out of scope of this specification.

For the former case, the SCF shall issue a SIP MESSAGE to the Parent UE and waiting for response. The SIP MESSAGE shall be built as following:

- Request URI shall be set to the well know PSI for parental control service.
- To header shall be set to the public user identity of the parent;
- From header shall be set to the public user identity of the child;
- Content Type shall be set to "application/3gpp-ims-pss-mbms-parental-control+xml"
- The message body shall include the XML document received from the child.

Upon receiving a SIP MESSAGE, the SCF shall identify it is a parental control request by the Content Type in the message header and feedback 200 OK response immediately. Following that the SCF shall extract the parent control request information and check the rights of the parent and then update the child's profile accordingly.

After that the SCF shall perform the session initialization and respond the Parent UE as per sub-clause 8.2.3.4.

17.2.2.2 Allowing in MBMS Session Initialization

17.2.2.2.1 General Description

Following is a general call flow for allowing a MBMS user service requested by the child:

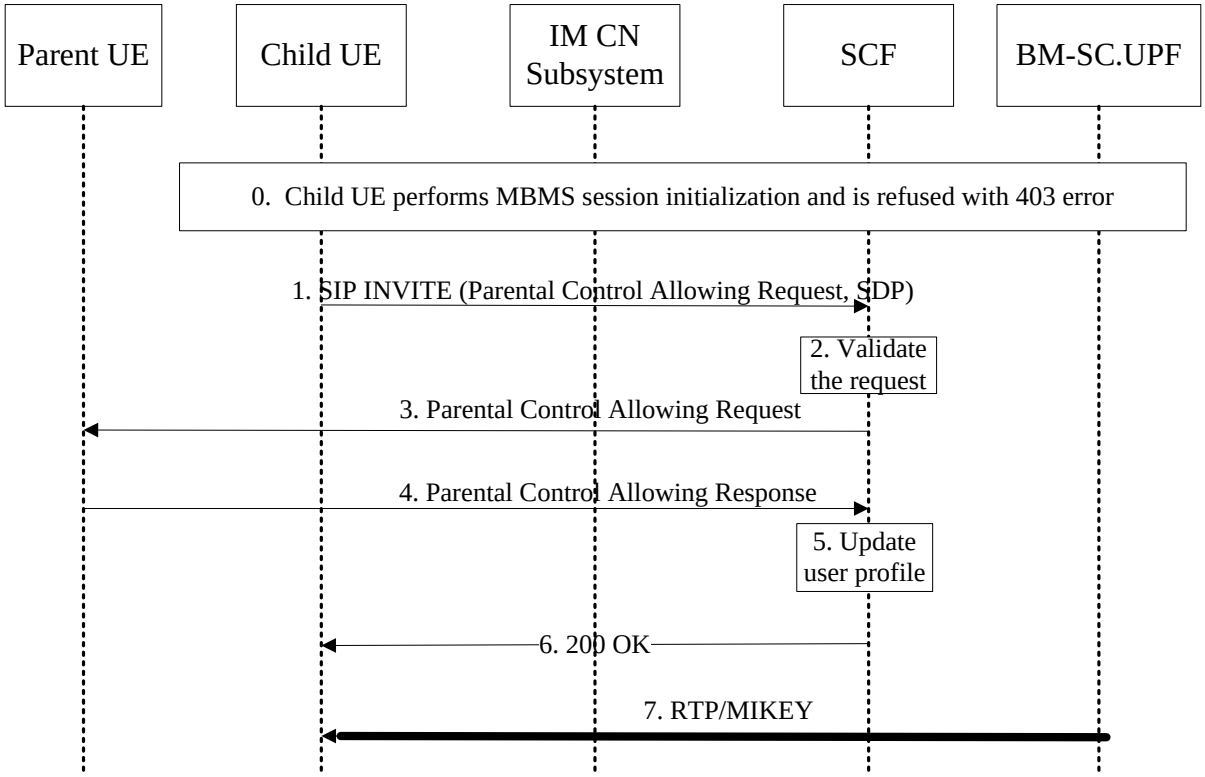

Figure 38: Interactive Parental Control Service—Allowing a MBMS user service

0 (Optional) the Child UE initiates a MBMS session and is refused with 403 error.

1 The Child UE performs MBMS session initialization with Parental Control Allowing Request, to request the Parent UE to allow him watching the program.

2 Upon receiving a PSS session initialization request as well as a Parental Control Allowing Request, the SCF shall validate the request.

3~4 The SCF send a Parental Control Allowing Request to the parents and the parent feedback its decision. The parent should make his decision based on service selection information related the program. Notes that this step can be done by either SIP MESSAGE message over IMS, or other means like SMS over mobile network.

5 Upon receiving the Parental Control Allowing response, the SCF shall update the user's (child's) profile according to the parents' decision.

6 If the parents decide to allow the child to watch the requested program, the SCF performs MBMS session initialization; otherwise the SCF shall reject the session initialization request with a 403 error.

7 Upon receiving 200 OK, the Parent UE can start receiving the MBMS Streaming session data when transmitted by the BM-SC.UPF.

17.2.2.2.2 Procedure at Child UE

The Child UE shall support the procedure specified in sub-clause 8.3.3.2.

To acquire parents' permission to watch the program, the message body of session initialization request shall also include a XML document as Parental Control Allowing Request. The XML document shall conform to the schema as defined in Annex L, with the following additions:

- The XML document shall be “application/3gpp-ims-pss-mbms-parental-control+xml”
- In the XML document, the PCAllowingRequest shall be presented with the following parameters:
    - ChildUserID: the public user identity of the child, whom will be blocked.
    - PatentUserID: the public user identity of the parent, who initiates the blocking.
    - ProgramID: the identifier of the content being blocked by the parent.

17.2.2.2.3 Procedure at Parent UE

Upon receiving a SIP MESSAGE, the Parent UE shall identify it is a parental control request by the Content Type in the message header and feedback 200 OK response immediately. Following that the Parent UE shall extract the parent control request information.

To accept the Parent Control Allowing Request, the Parent UE shall not change the XML document and send it back in a SIP MESSAGE message to the SCF.

To refuse the Parent Control Allowing Request, the Parent UE shall delete the ProgramID in the XML document and send it back in a SIP MESSAGE message to the SCF.

17.2.2.2.4 Procedure at SCF

The SCF shall support the procedure specified in section 17.2.1.3, with the following addition:

If there is a Parent Control Allowing request XML document, the SCF shall extract the parental control information. Following that, the SCF shall forward the request to the Parent UE according to the request and waiting for the response. This can be done either by SIP MESSAGE exchange, or by other means like SMS over mobile network which is out of scope of this specification.

For the former case, the SCF shall issue a SIP MESSAGE to the Parent UE and waiting for response. The SIP MESSAGE shall be built as following:

- Request URI shall be set to the well know PSI for parental control service.
- To header shall be set to the public user identity of the parent;
- From header shall be set to the public user identity of the child;
- Content Type shall be set to “application/3gpp-ims-pss-mbms-parental-control+xml”
- The message body shall include the XML document received from the child.

Upon receiving a SIP MESSAGE, the SCF shall identify it is a parental control request by the Content Type in the message header and feedback 200 OK response immediately. Following that the SCF shall extract the parent control request information and check the rights of the parent and then update the child’s profile accordingly.

After that the SCF shall perform the session initialization and respond the Parent UE as per sub-clause 8.3.3.4.

18 Forced Playout Constraints

18.1 General Description

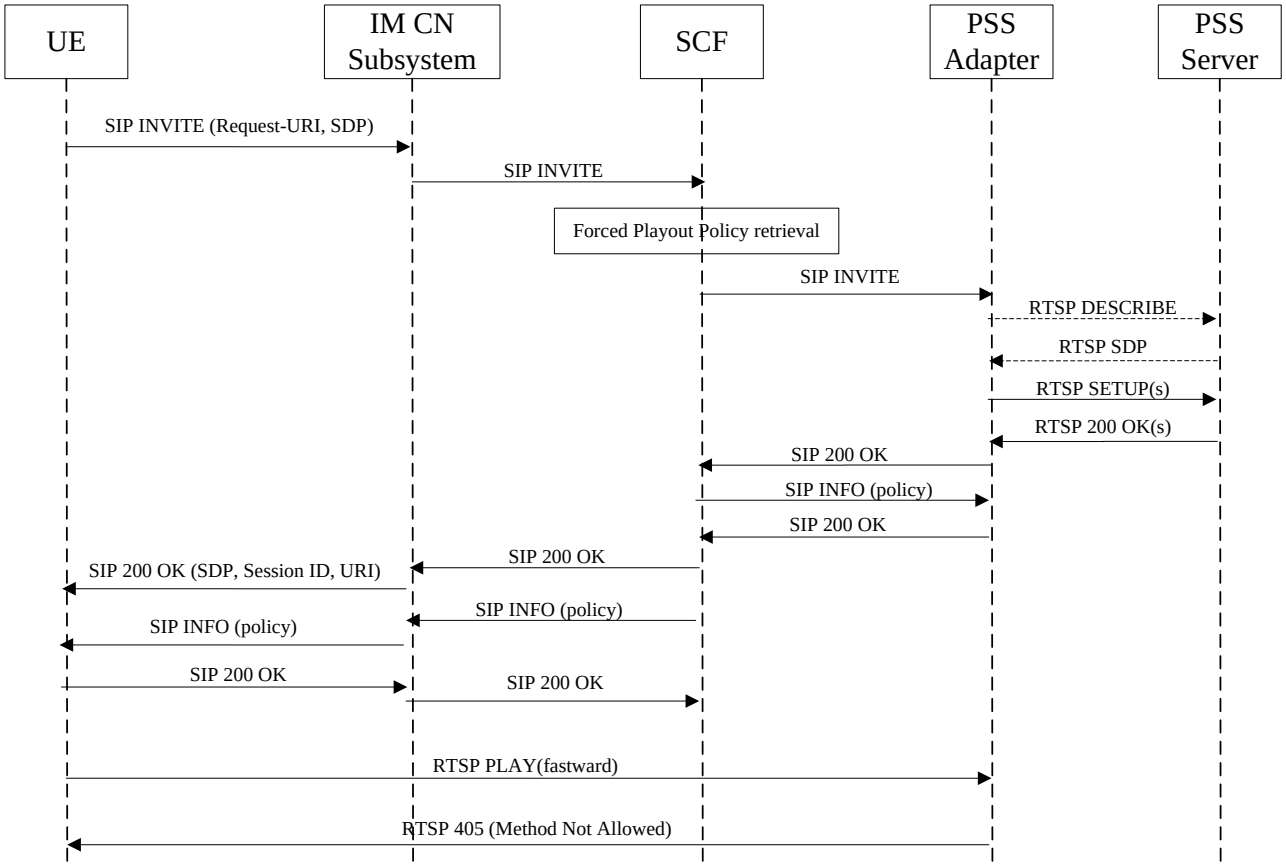

Figure 39: Forced Playout Constraints policy delivery and execution

NOTE 1: This sequence is simplified and does not e.g. show session progress messages and the ACK message from the UE in response to the reception of 200 OK.

NOTE 2: SIP messages between PSS adapter and SCF go through the IM CN Subsystem even if not indicated on the sequences.

18.2 Procedures at the UE

The UE shall perform PSS session initialization as per procedure defined in sub-clause 8.2.3.2 and playback control as defined in sub-clause 8.2.4.2.

When receiving a SIP INFO message, within a PSS service, the UE shall identify it contains forced playout constraints policy by checking whether the content-type in the message header. Following that, the UE shall then extract the policy from the SIP message body and store it.

During the playback of the PSS service, the UE should not issue any RTSP request message when it is not supported as indicated in the policy document.

18.3 Procedures at the IM CN Subsystem

The IM CN Subsystem handles the SIP dialog as defined in 3GPP TS 23.228 [6].

18.4 Procedures at the SCF

The SCF shall perform PSS session initialization as per procedure defined in sub-clause 8.2.3.4.

To support Forced Playout Constraints, the following shall apply:

- The SCF shall acquire information about the playout constraints policy from the content provider. This information shall include the start and end time of controlled content and a list of RTSP operations that are to be controlled. The SCF then uses this information to generate the Policy. When a user requests to consume the content, the SCF shall check the user's service rights and based upon this shall decide whether to issue the policy or not.

- Once receiving a SIP 200 OK response from PSS Adapter, the SCF shall check whether it has a forced playout constraints policy applicable to the selected content. If yes, the SCF shall save the response and :

  - Issue a SIP INFO message contains the policy to the PSS Adapter selected for the session. Upon receiving a SIP 200 OK, the SCF shall forward the saved response to UE;

  - Then the SCF shall further issue a SIP INFO message contains the policy to the UE.

The SIP INFO message SHALL include a XML body to describing the forced playout constraints policy. The XML body shall conform to the XML schema defined in Annex T of TISPAN [24]. The parameters shall be included as follows:

ContentID: the identifier for a content that SHALL be controlled by the forced playout constraints policy.

StartTime: the start time that the forced playout constraints SHALL be enforced.

EndTime: the end time that the forced playout constraints SHALL be enforced.

RTSPOperation: the RTSP operations that are not permitted.

18.5 Procedures at the PSS Adapter

The PSS Adapter shall perform PSS session initialization as per procedure defined in sub-clause 8.2.3.5 and playback control as defined in sub-clause 8.2.4.3.

To support Forced Playout Constraints, when receiving a SIP INFO message ,within a PSS service, the PSS Adapter shall identify it contains forced playout constraints policy by checking whether the content-type in the message header is "application/3gpp-ims-pss-mbms-forced-playout+xml". Following that, the PSS Adapter shall extract the forced playout constraints policy from the SIP message body and store it for enforcement against the content in the concerned session.

If the PSS Adapter received any forced playout constraints policy document during session setup, the PSS Adapter shall save the policy. Upon receiving a RTSP request from UE during the playback, the PSS Adapter shall check whether the requested operation is permitted as per the policy. If the requested operation is forbidden by the policy, the PSS Adapter shall disable the request and respond with a RTSP 405(Method Not Allowed) message.

19 3GP-DASH (Dynamic and Adaptive Streaming over HTTP) service

19.1 Session initiation and QoS reservation

19.1.1 General description

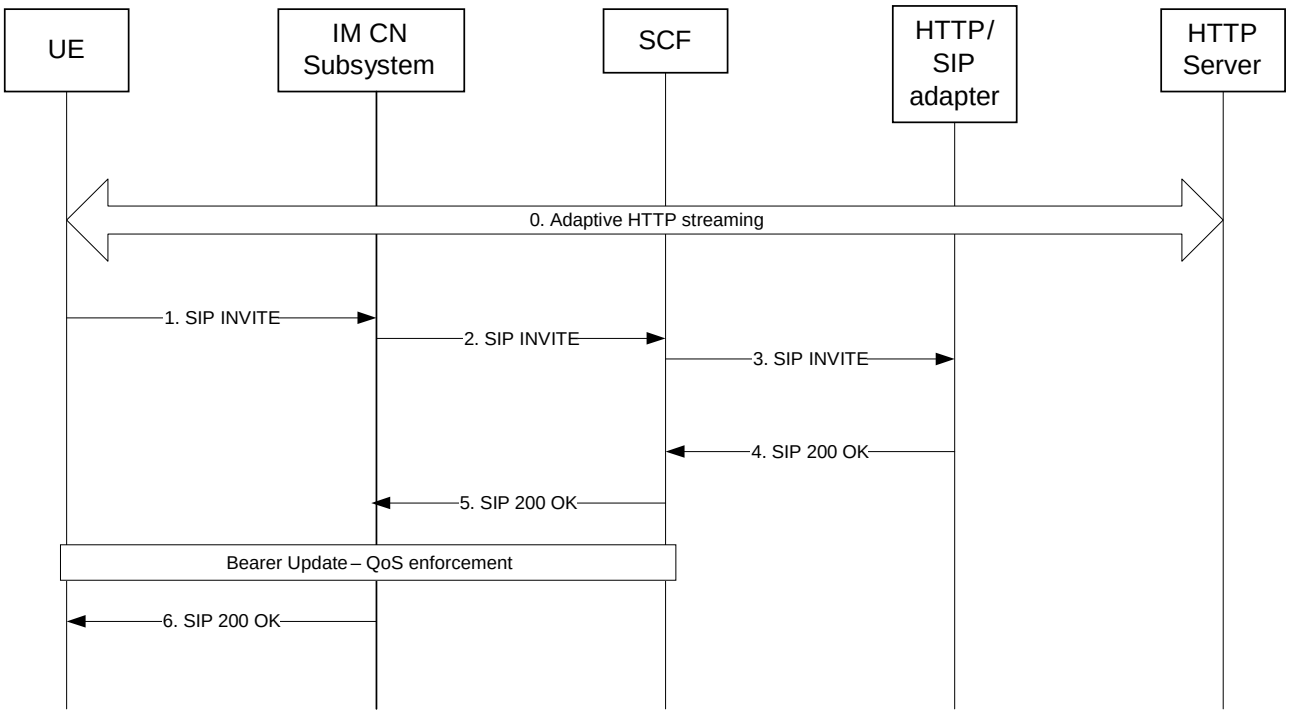

Figure 40: IMS based session initiation and QoS reservation for 3GP-DASH

1. HTTP streaming has started by fetching media segments from the HTTP server after obtaining the MPD
2. The UE initiates the streaming session by sending SIP INVITE to the IM CN subsystem, including an SDP offer.
3. The IM CN subsystem forwards the SIP INVITE message to the SCF.
4. The SCF selects a HTTP/SIP adapter, and forwards the SIP INVITE message to the HTTP/SIP adapter.
5. The HTTP/SIP adapter sends the SIP 200 OK answer to the SCF with the SDP answer.
6. The SCF forwards the SIP 200 OK to the IM CN subsystem. The IM CN subsystem interacts with the PCRF to commit the QoS reservation, and then forwards the SIP 200 OK to the UE
7. The IM CN subsystem forwards the SIP 200 OK to the UE.

Afterwards, media segments are delivered to the UE using the reserved QoS.

19.1.2 Procedures at the UE

The UE initiates the HTTP streaming session by sending SIP INVITE to the IM CN subsystem. The content of the SIP INVITE shall be as follows:

- The Request URI is related to the session the user wants to activate. The Request-URI shall be composed of a user and domain part as defined as follows:
  - The user part contains the content identifier, retrieved from user service description information from SSF
  - The domain part is the Service Provider domain name, obtained from SSF.
- The To header shall contain the same URI as in the Request URI.
- The From header shall indicate the public user identity of the user.

The content identifier shall be retrieved from service selection information.

The other headers shall be set according to 24.229 [7].

An SDP offer shall be included in the initial INVITE request, in accordance with media capabilities and policies available for the HTTP streaming session and with the parameters received from the SSF during service selection procedure or during the procedure for retrieving missing parameters by SIP OPTIONS or by MPD analysis.

The SDP media parameters should describe the HTTP streaming session. The differences with the SDP offer defined for RTP streaming is the absence of media line corresponding to the control protocol (RTSP), and the indication of TCP transport and HTTP download method instead of streaming in "m" line.

The SDP parameters for the HTTP download channel shall be set as follows:

- a 'm' line for an HTTP download channel of format: m=<media> <port> <transport> <fmt>
  - The media field shall have a value of "application".
  - The port field shall be set to a value of 9, which is the discard port. See RFC 4145 [13] and RFC 4572 [14].
  - The transport field shall be set to TCP or TCP/TLS. The former is used when HTTP runs directly on top of TCP and the latter is used when HTTP runs on top of TLS, which in turn runs on top of TCP.
  - The <fmt> parameter shall be included and shall be set to *3gpp_http*.

  NOTE: the *3gpp_http* application format should have a new MIME subtype registered in IANA.

  - An "a=setup" attribute shall be present and set to "active" indicating that the UE will initiate an outgoing TCP connection to the HTTP Server.
  - An "a= connection" attribute shall be present and set as "existing".
  - A "c" line shall include the network type with the value set to IN, the address type set to IP4 or IP6 and IP address of the flow of the related HTTP download channel (ex. `c=IN IP4 <IP_ADDRESS>`).
  - A "b=" line contains the proposed bandwidth. If the user has fetched the bandwidth required for this particular content delivery channel by MPD analysis, the bandwidth attribute at media level shall be set to this value. Otherwise, this attribute shall be set to a pre-configured value; (ex. b=AS:15000)

An example of the SDP offer for IMS-based HTTP streaming is:

```
v=0
o=bob 2890844527 2890844527 IN IP4 192.0.2.2
s=HTTP Streaming Session
i=A HTTP Streaming session declared within the session description protocol
t=0 0
m=application 9 TCP 3gpp_http
a=connection:existing
a=setup:active
c= IN IP4 192.0.2.2
b=AS:15000
```

19.1.3 Procedures at the IM CN subsystem

The IM CN subsystem shall forward the SIP INVITE to the SCF.

Upon reception of the SIP 200 OK from the SCF, the IM CN subsystem forwards the SIP 200 OK to the UE.

The IM CN Subsystem handles the SIP dialog as defined in 3GPP TS 23.228 [6].

QoS reservation is carried out according to clause 9.

19.1.4 Procedures at the SCF

Upon reception of the SIP INVITE from the UE, the SCF checks the user rights for the requested content, identifies that the request is for HTTP streaming, selects and forwards the SIP request to the HTTP/SIP adapter which is in charge of the HTTP streaming service by changing the "Request-URI" accordingly.

When receiving a 301 or 302 response from the HTTP/SIP adapter, the SCF shall not forward this message to the UE.

19.1.5 Procedures at the HTTP/SIP adapter

Upon reception of the HTTP streaming session initiation request, the HTTP/SIP adapter shall examine the content identifier present in the user-part of the To header and the media parameters in the SDP and selects a HTTP Server according to the Request URI.

The HTTP/SIP adapter may decide to redirect the request to another HTTP/SIP adapter server. In this case the HTTP/SIP adapter shall return a 301 response if the content is not managed by this HTTP/SIP adapter or 302 response for any other reasons (e.g. load balancing). The redirecting HTTP/SIP adapter indicates one or more destination HTTP/SIP adapter addresses in the Contact header.

The HTTP/SIP adapter returns the SIP 200 OK message to the SCF, including the SDP answer. The SDP answer should describe the HTTP streaming session. The differences with the SDP answer defined for RTP streaming is the absence of media line corresponding to the control protocol (RTSP), the indication of TCP transport and HTTP download method instead of streaming in "m" line.

If the content that the user has selected cannot be found the HTTP/SIP adapter shall reply with appropriate, SIP error code 404 Not Found response.

The HTTP/SIP adapter shall construct the SIP 200 OK message as follows:

- an 'm' line for an HTTP streaming channel of format: m=<media> <port> <transport> <fmt>
  - The media field shall have a value of "application".
  - The port field shall be set to the value of HTTP Server for the HTTP streaming channel, such as 80.
  - The transport field shall be set to TCP or TCP/TLS. The former is used when HTTP runs directly on top of TCP and the latter is used when HTTP runs on top of TLS, which in turn runs on top of TCP.
  - The fmt field shall be identical to the one received in the SDP offer.
- a "c" line shall include the network type with the value set to IN, the address type set to IP4 or IP6 and IP address of HTTP server for the flow of the related HTTP download channel (e.g. `c=IN IP4 <IP_ADDRESS>`).
- The "a=setup" attribute shall be present and set to 'passive' indicating that connection shall be initiated by the other endpoint (UE).
- An "a= connection" attribute shall be present and set as "existing".
- the "b=" line shall contain the proposed bandwidth. Since the content download is unidirectional the bandwidth shall be set to 0.`(ex. b=AS:0)`.

An example of the SDP answer in the SIP 200 OK response is:

```
v=0
o=bob 2890844527 2890844527 IN IP4 192.0.2.1
s=Download Session
i=A download session declared within the session description protocol
t=0 0
m=application 80 TCP 3gpp_http
a=connection:existing
a=setup:passive
c=IN IP4 192.0.2.1
```

```
b=AS:0
```

19.1.6 Procedures at the HTTP server

Upon reception of the HTTP GET message received from the UE, the HTTP server shall deliver the requested media segments.

19.2 MPD Update

19.2.1 General description

A SIP event frame work is used in order to inform the UE about a MPD update. This avoids direct polling of the HTTP server by the UE and reduces the signalling overhead.

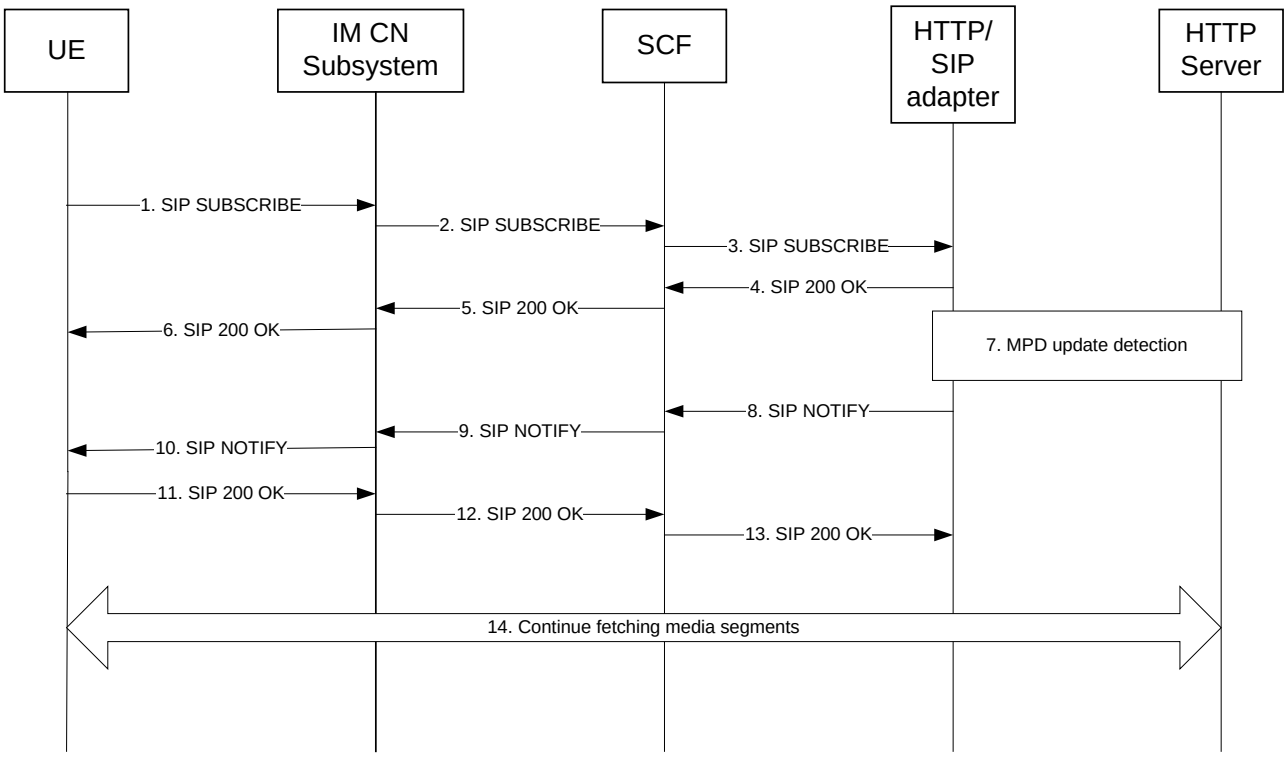

Figure 41: MPD Update

1. The UE sends a SIP SUBSCRIBE message towards the IM CN subsystem.
2. The IM CN subsystem forwards the request to the SCF.
3. The SCF forwards the request to the HTTP/SIP adapter.
4. The HTTP/SIP adapter sends a SIP 200 OK response to the SCF.
5. The SCF forwards the SIP 200 OK response to the IM CN subsystem.
6. The IM CN subsystem forwards the SIP 200 OK response to the UE.
7. The HTTP/SIP adapter detects an updated MPD e.g by polling towards the HTTP server and recognizing a change of the MPD
8. The HTTP/SIP adapter sends a SIP NOTIFY message including the updated MPD to the SCF.
9. The SCF forwards the SIP NOTIFY message to the IM CN subsystem.

10. The IM CN subsystem forwards the message to the UE.
11. The UE sends a SIP 200 OK to the IM CN subsystem.
12. The IM CN subsystem forwards the response to the SCF.
13. The SCF forwards the SIP 200 OK to the HTTP/SIP adapter.
14. Adaptive HTTP streaming is continued by fetching media segments as described in the updated MPD.

19.2.2 Procedures at the UE

19.2.2.1 Subscription

When the UE intends to retrieve MPD Update information from the SDF, it shall generate a SUBSCRIBE request for the "MPD-Update" event package.

The contents of the SUBSCRIBE request shall be as follows:

- The value of the Request-URI shall be set to one of following:
  - the PSI of the SCF; or
  - the public user identity of the end user (when the UE does not know the PSI of the SCF).
- The From and To header shall be set to the public user identity of the user.
- The Event header shall be set to the "MPD-Update" event package.
- The message body shall include the MPD URL.

A UE that doesn't subscribe for MPD updates may still get new MPD by regular MPD update procedures as specified in TS 26.247.

19.2.2.2 Receiving Notifications

Upon receipt of a NOTIFY request on the dialog which was generated during subscription, the application within the UE shall extract the MPD contained in the message body.

In case the UE does not understand the NOTIFY request or detects errors in the MPD, the UE shall return a 400 Bad Request to the NOTIFY request. In addition, the UE should behave in the same way as if erroneous MPD is received directly from the HTTP server.

Otherwise, the UE shall return a 200 OK response to the NOTIFY request.

19.2.3 Procedures at the IM CN subsystem

The IM CN subsystem shall forward the SIP SUBSCRIBE to the SCF.

Upon reception of the SIP 200 OK from the SCF, the IM CN subsystem forwards the SIP 200 OK to the UE.

The IM CN subsystem shall forward the SIP NOTIFY to the UE.

Upon reception of the SIP 200 OK from the UE, the IM CN subsystem forwards the SIP 200 OK to the SCF.

The IM CN Subsystem handles the SIP dialog as defined in 3GPP TS 23.228 [6].

19.2.4 Procedures at the SCF

Upon reception of the SIP SUBSCRIBE from the UE, the SCF identifies that the request is for HTTP streaming, selects and forwards the SIP request to the HTTP/SIP adapter which is in charge of the HTTP streaming service by changing the "Request-URI" accordingly.

When receiving a 301 or 302 response from the HTTP/SIP adapter, the SCF shall not forward this message to the UE.

19.2.5 Procedures at the HTTP/SIP adapter

When the HTTP/SIP adapter receives a SUBSCRIBE request, it shall examine the parameters specified in the SIP SUBSCRIBE body and extract the MPD URL.

The HTTP/SIP adapter shall generate a SIP 200 OK in response to the SUBSCRIBE request.

The HTTP/SIP adapter shall be able to detect an updated MPD at the HTTP server and to download it. The exact procedure for MPD update detection is out of scope of this specification.

NOTE1: MPD update detection may be done by the following procedures: the HTTP/SIP adapter may send a HTTP GET message to the HTTP server requesting the MPD. Upon reception of the HTTP 200 OK the HTTP/SIP adapter may store the received MPD. The newly received MPD is compared with previously received and stored MPD. In case of a difference between these two MPD files, an MPD update is detected. The HTTP “Connection” header shall be set to “Keep-Alive” to indicate it is a persistent TCP connection.

NOTE2: In order to avoid the complete download of the MPD at each request HTTP, conditional GET including an If-Modified-Since header field may be used.

In case of a detected MPD update a SIP NOTIFY message is sent to the SCF. The contents of the NOTIFY request shall be as follows:

- The Event header shall be set to the "MPD-Update" event package.
- The content type shall be set to “video/vnd.3gpp.mpd”.
- The message body shall contain the updated MPD.

In case of receiving a 400 Bad Request status code after sending the SIP NOTIFY message, the HTTP/SIP adapter shall repeat the MPD update detection procedure.

19.2.6 Procedures at the HTTP server

Procedures for MPD update detection at the server depend on the selected method. The exact procedure for MPD update detection is out of scope of this specification.

NOTE: In case of HTTP polling from the HTTP/SIP adapter and upon reception of the HTTP GET received from the HTTP/SIP adapter, the HTTP server delivers in the HTTP response the MPD file corresponding to the URL obtained in the received HTTP GET. The HTTP “Connection” header is set to “Keep-Alive” to indicate it is a persistent TCP connection.

Upon reception of the HTTP GET message received from the UE, the HTTP server shall deliver the requested media segments.

19.3 Session termination

19.3.1 General description

19.3.1.1 UE-initiated session termination

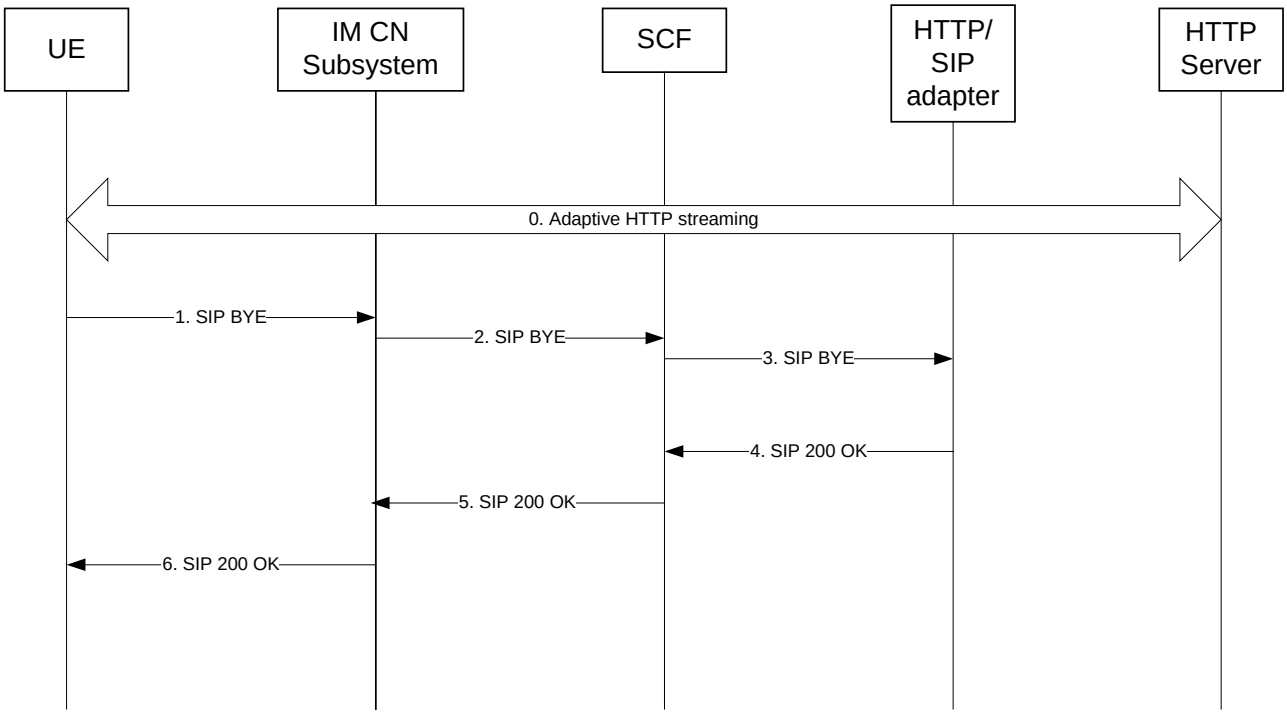

Figure 42: UE-initiated session termination

Here the case of UE termination is described. The following steps are carried out:

7. The UE sends a SIP BYE message.
8. The IM CN subsystem forwards the SIP BYE message to the SCF.
9. The SCF sends the SIP BYE message to the HTTP/SIP adapter.
10. The HTTP/SIP adapter sends a SIP 200 OK to the SCF.
11. The SCF sends the SIP 200 OK to the IM CN subsystem.
12. The IM CN subsystem forwards the SIP 200 OK to the UE.

The UE may stop fetching media segments and close the HTTP connection before the SIP Bye procedure is initiated. The UE shall stop fetching media segments and close the HTTP connection at the latest immediately after step 6.

19.3.1.2 SCF-initiated session termination

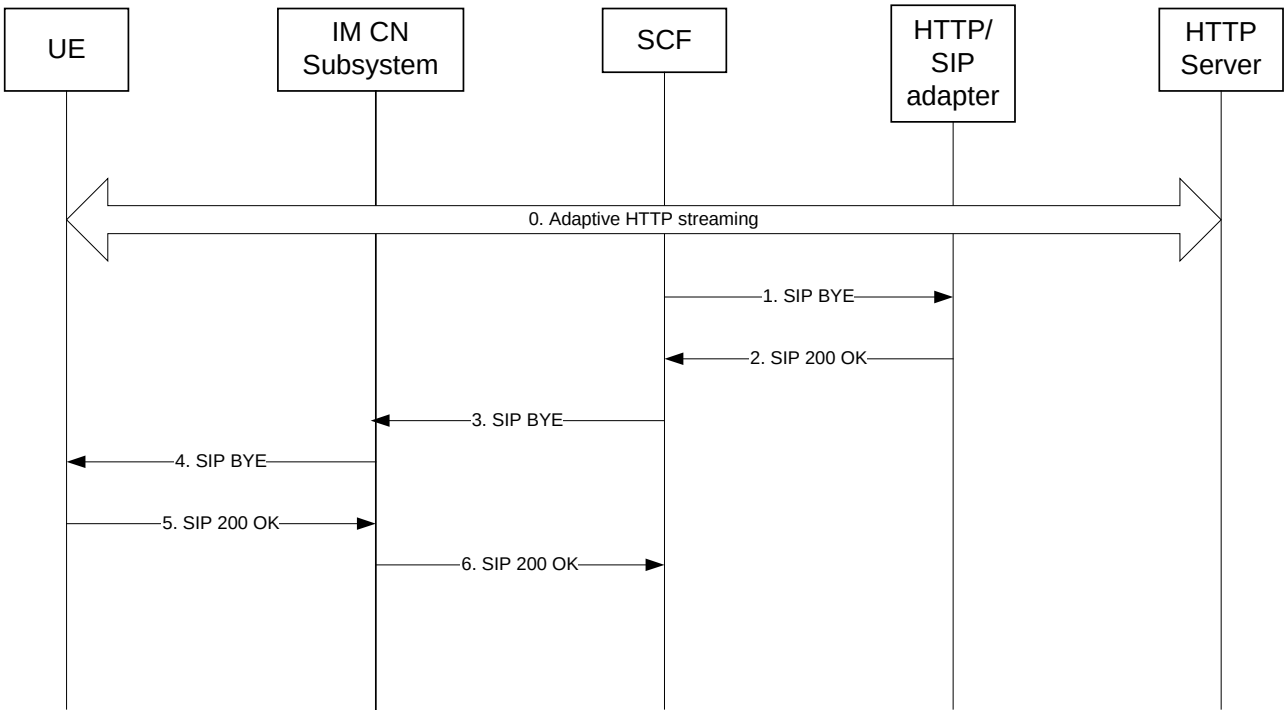

Figure 43: SCF-initiated session termination

Here the case of the SCF-initiated termination procedure is described. The following steps are carried out:

1. The SCF sends a SIP BYE to the HTTP/SIP adapter.
2. The HTTP/SIP adapter sends the SIP 200 OK message to the SCF.
3. Upon receipt of the SIP 200 OK, the SCF sends the SIP BYE message to the IM CN subsystem.
4. The IM CN Subsystem forwards the SIP BYE message to the UE. The UE stops fetching media segments and closes the HTTP connection.
5. The UE sends a SIP 200 OK message to the IM CN Subsystem.
6. The IM CN Subsystem forwards the SIP 200 OK to the SCF.

19.3.1.3 HTTP/SIP adapter-initiated session termination

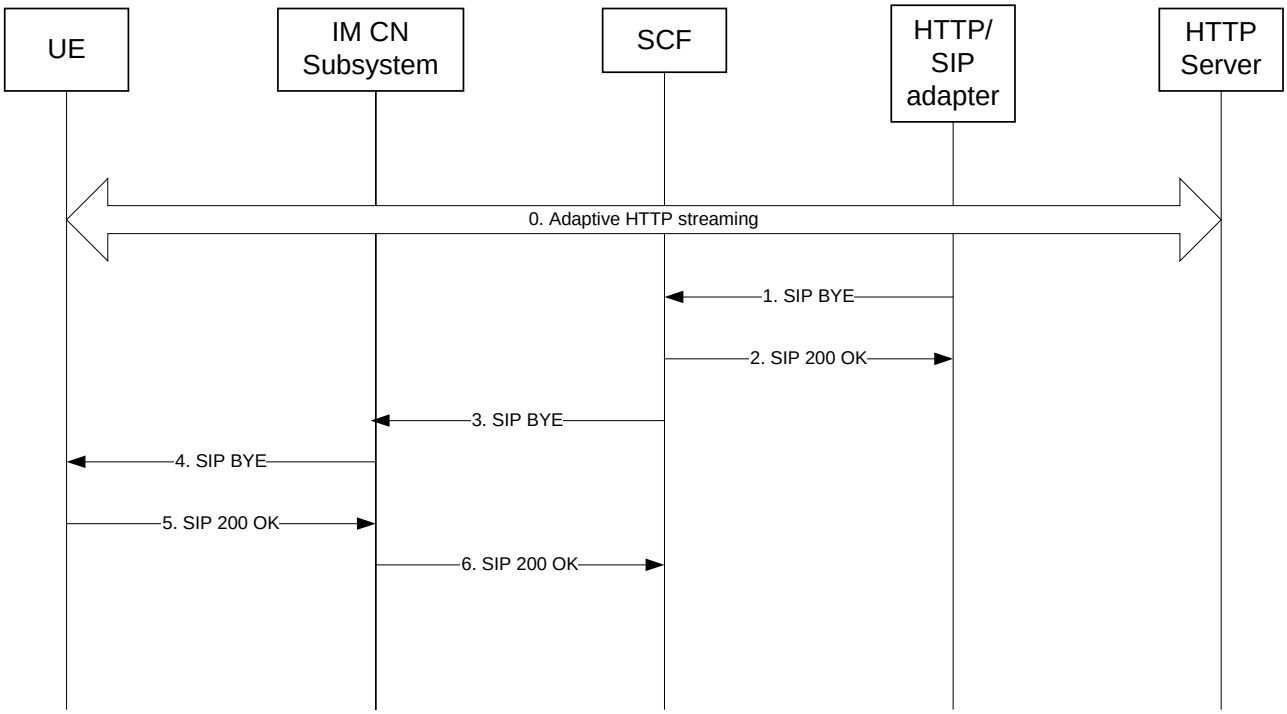

Figure 44: HTTP/SIP adapter-initiated session termination

Here the case of the SCF-initiated termination procedure is described. The following steps are carried out:

1. The HTTP/SIP adapter sends the SIP BYE message to the SCF.
2. The SCF sends the SIP 200 OK message to the HTTP/SIP adapter.
3. The SCF sends the SIP BYE message to the IM CN Subsystem.
4. The IM CN Subsystem forwards the SIP BYE message to the UE. The UE stops fetching media segments and closes the HTTP connection.
5. The UE sends a SIP 200 OK message to the IM CN Subsystem.
6. The IM CN subsystem forwards the SIP 200 OK message to the SCF.

19.3.2 Procedures at the UE

19.3.2.1 UE-initiated session termination

To terminate the session, the UE shall send a SIP BYE message to the SCF.

After receiving the SIP 200 OK the UE stops fetching media segments and closes the HTTP connection.

19.3.2.2 Network-initiated session termination

Upon receipt of the SIP BYE message, the UE shall send the SIP 200 OK message to the SCF. The UE stops fetching media segments and closes the HTTP connection

19.3.3 Procedures at the IM CN Subsystem

The IM CN subsystem handles the SIP dialog as defined in [6].

19.3.4 Procedures at the SCF

19.3.4.1 UE-initiated session termination

Upon receipt of a SIP BYE message the SCF shall forward it to the HTTP/SIP adapter.

19.3.4.2 SCF-initiated session termination

The SCF initiates the session termination by sending a SIP BYE message to theHTTP/SIP adapter. Upon receipt of the SIP 200 OK from the HTTP/SIP adapter, the SCF shall send a SIP BYE message to the UE.

19.3.4.3 HTTP/SIP adapter-initiated session termination

Upon receipt of the SIP BYE message received from the HTTP/SIP adapter, the SCF sends the SIP 200 OK message to the HTTP/SIP adapter. Then, the SCF forwards the SIP BYE message to the UE.

19.3.5 Procedures at the HTTP/SIP adapter

19.3.5.1 UE-initiated session termination

Upon receipt of a SIP BYE message the HTTP/SIP adapter shall send a SIP 200 OK message to the SCF.

19.3.5.2 SCF-initiated session termination

Upon receipt of the SIP BYE message, the HTTP/SIP adapter shall send a SIP 200 OK to the SCF.

19.3.5.3 HTTP/SIP adapter-initiated session termination

The HTTP/SIP adapter shall send the SIP BYE message to the SCF.

19.3.6 Procedures at the HTTP server

The HTTP server shall stop still on-going media segment transmissions if the HTTP connection is closed.

20 Network PVR

20.1 NPVR Recording procedure

20.1.1 General Description

Network-PVR (NPVR) is a function for a user to record program(s) in the network side for future accessing and consuming.

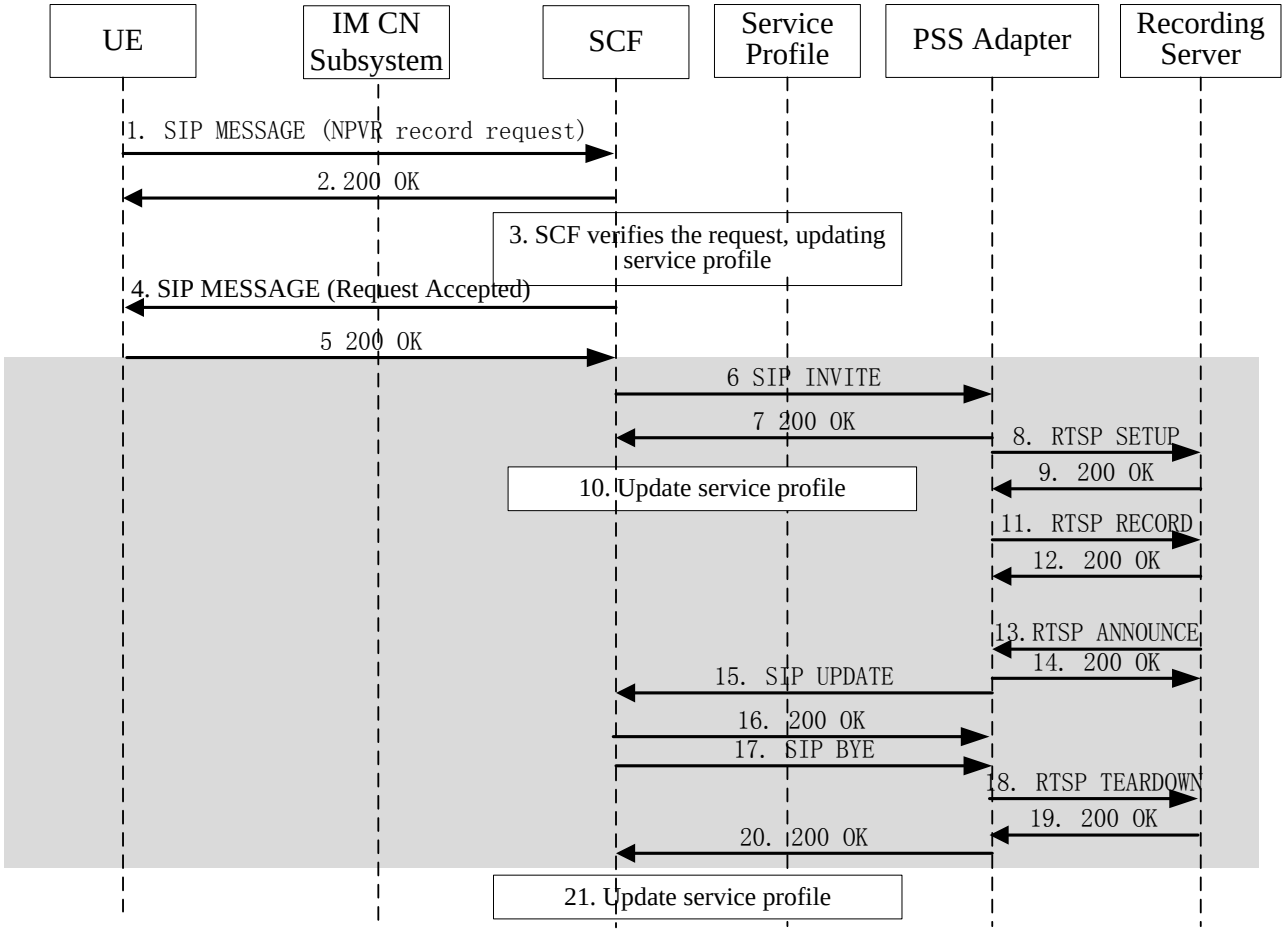

Figure 45: NPVR

The following is a description of the interactions in the flow:

1. The UE, on behalf of the user, issues a request to record a live program. The program can be either currently broadcasting program (instant recording) or a future program (scheduled recording). The record request includes the relevant information like program identifier, timing information, etc

2-3. Receiving the record request, the SCF first checks whether the program is recordable and whether the user has the right to record it. If fine, the SCF further checks whether the user has enough storage space. Following that, the SCF creates a context for the record request, and update the user's profile with the record status "record request captured".

4-5. The SCF responses to the user, notifying the acceptance of the record request.

6-7. For instant recording, the SCF starts the recording by selecting a proper PSS Adapter, and directing it to set up a delivery channel with a content source to receive content. The PSS service initialization procedure as defined in section 8.2.3 shall be used.

For scheduled recording, the SCF creates a timer for the request. When the start time comes, the SCF directs and controls the Recording server for recording as the case for instant recording.

Notes: Upon reception of more than one NPVR request for the same program, the SCF, based on local policy, may issue only one record request to Recording server. In this case, the SCF will update each of the requestor's user profile when recording status changes.

8. Once the NPVR request is started, the SCF will then update all the requestors' user profile with the recording status "recording started".

9-12. The PSS Adapter for NPVR setup and starts the recording according NPVR request; The Recording server retrieves the streamed content for live streaming service and records the content properly.

13-14. When recording completed, the Recording server send RTSP ANNOUNCE message to the PSS Adapter;

Note: the Recording server may deliver the recorded content to a PSS Server for serving any NPVR retrieve, or store the content in itself and acting as PSS Server later. How to deliver the recorded content to another PSS server is out of scope of the present document.

15-16. The PSS Adapter send SIP UPDATE to SCF to indicate the ending of NPVR recording;

17-20. The SCF teardown the SIP session and the PSS Adapter teardowns the RTSP session for NPVR recording.

21. Once the NPVR request is completed, the SCF will then update all the requestors' user profile with the recording status "recording completed".

20.1.2 Procedures at UE

When UE initiates the request for NPVR Request, the UE shall issue a SIP MESSAGE according to TS 24.229 [7] with the following additions:

- The Request-URI shall be composed of a user and domain part as defined as follows:
    - The user part shall be "PSS_PVR_<content-id>" wherein content-id shall be globalContentID of the content to be recorded.
    - The domain part is the Service Provider domain name, obtained from SSF.
- The Content-Type of the message body shall be set to "application/3gpp-ims-pss-mbms-npvr+xml"
- The message body shall include XML document as defined in Annex N.
    - The NPVRRequest shall be present;
    - ProgramID : if present, identifies the content to be recorded; when occurs, shall be globalContentID retrieved from User Service Description
    - ServiceID: identifies live channel to be recorded; it shall be globalServiceID retrieved from User Service Description
    - RecordStartTime: indicates the time to start recording, where "0" or time before now implies instant recording, while other time implies scheduled recording;
    - RecordDuration: indicates the time duration of the recording;

Upon receiving a SIP MESSAGE, the UE shall identify it as a NPVR response by comparing the content type of the message body with "application/3gpp-ims-pss-mbms-npvr+xml". Following that, the UE shall response with 200 OK response.

20.1.3 Procedures at SCF

The SCF shall support the procedures specified in [TS124503] as applicable to an AS acting as a terminating SIP UA.

When receiving any NPVR request, the SCF shall first response with 200 OK, and then examine the request to see:

- If the user subscribed to the PVR service.
- If the program is allowed to recorded.
- If it is compatible with the user's profile (e.g. parental control level).
- If the new item to be recorded doesn't exceed the user's storage quota, by checking the user's profile.

The SCF shall then construct a SIP MESSAGE request towards the UE with the NPVR response. The content of the message shall be as follows:

- The Request-URI shall be set to the IMPU of the user.
- The Content-Type of the message body shall be set to "application/3gpp-ims-pss-mbms-npvr+xml"
- The message body shall include XML document as defined in Annex N.

- The NPVRResponse shall be present;
- Result: indicate the status of the NPVR request, i.e. Error or request accepted.

Following that, the SCF shall create a context for the request, register relevant information and update the user profile for that user, with the status for PVR changing to “Recording Captured”, meaning that a NPVR request is pending execution.

For instant recording, the SCF starts the recording immediately by selecting a proper Recording Server, and sending a SIP INVITE message to the PSS Adapter to initialize a Recording Session.

For scheduled recording, the SCF creates a timer for the request. When the start time comes, the SCF starts the recording immediately by selecting a proper Recording Server, and sending a SIP INVITE message to the PSS Adapter to initialize a Recording Session.

Based on the local policy, the following should apply to avoid duplicated recording:

- Upon receiving a scheduled recording request, the SCF check whether the same program (identified by ServiceID and ProgramID) has been requested to record. If yes, the SCF shall not issue another NPVR request for the same content.
- Upon receiving an instant recording request, the SCF examines the status of the program. If the same program (identified by ServiceID and ProgramID) is already under recording, the SCF shall not issue another NPVR request for the same content.

When starting the recording, the SCF shall build the SIP INVITE message as follows:

- The Request-URI in the INVITE request shall be the IMPU of the selected Recording server
- The To header shall contain the same URI as in the Request-URI.
- The From header shall be set to “PSS_PVR_<content-id>@domain name”, wherein content-id shall be globalContentID of the content to be recorded;

A NPVR request XML document and an SDP offer shall be included in the request body. The SDP offer shall be done in accordance with the parameters signalled in service selected information. The SDP offer at media level shall include the following elements:

- The m-line(s) shall be set to the media parameters retrieved via service selection procedures for the requested service.
- The c-line(s) shall be set according to the IP address retrieved via service selection procedures for the requested service.

Upon receiving the SIP UPDATE message from the PSS Adapter for NPVR, the SCF shall extract the NPVR recording result from the message and update the user profile of all the users who requested to record the content. Following that the SCF shall teardown the session by initiating a SIP BYE to the PSS Adapter.

20.1.4 Procedures at PSS Adapter

The PSS Adapter for NPVR shall support the following RTSP methods for NPVR session establishment and teardown control:

- SETUP (PSS Adapter to Recording server).
- RECORD (PSS Adapter to Recording server).
- ANNOUNCE (Recording server to PSS Adapter).
- TEARDOWN (PSS Adapter to Recording server).

Upon receipt of a SIP INVITE message, the PSS Adapter shall identify it as a NPVR request by the From header, and then performs the following actions:

- It shall resolve the RTSP URI based on the Request-URI, the SDP parameters and the selected Recording server.
- It shall construct and send the RTSP SETUP message(s) to setup the relevant media streams.

- Return the answer SDP to the SCF in the SIP 200 OK.

The PSS Adapter shall construct the RTSP SETUP message according to the SIP INVITE as follows:

- The Request-Line shall be present of format: Request-Line = Method SP Request-URI SP RTSP-Version CRLF:
  - Method field is set to SETUP;
  - RTSP-Version field to be set of RTSP/1.0.
- The CSeq header field is set to a value allocated by PSS Adapter according to RFC 2326 [25]
- The transport header field:
  - the protocol and profile sub-fields together are set to a value of the protocol sub-field of the corresponding "m=" line in the SDP offer,
  - the unicast | multicast parameter is set according to the “c=” line.
  - The destination parameter is set to a value of the "c=" line in the SDP offer,
  - The RTP port value is set to the value of the port sub-field of the corresponding "m=" line in the SDP offer, and the RTCP port value is set to a value of the RTP port value plus 1.

The PSS Adapter may send multiple RTSP SETUP messages if multiple media delivery channels are carried within the SDP offer. In this case, the pipeline of multiple RTSP SETUP messages may be supported.

When receiving a RTSP 200 OK response from the Recording server, the PSS Adapter parses the response, constructs a SIP 200 OK response with the final SDP, and sends the SIP 200 OK response to the SCF.

Following that, the PSS Adapter shall further send RTSP RECORD message to the Recording server to start the recording. In the message the range header shall be set according to the time duration of the NPVR request.

Upon receiving the RTSP ANNOUNCE with NPVR result, the PSS Adapter shall initiate a SIP UPDATE message to the SCF. The content of the SIP UPDATE message shall be as following:

- The Request-Line shall be set to “PSS_PVR_<content-id>@domain name”, wherein content-id shall be globalContentID of the content to be recorded
- The To header shall contain the same URI as in the Request-URI.
- The From header shall be set to the IMPU of the selected Recording server;
- The body shall contain the XML document received from the Recording server, with necessary information (i.e. ProgramID, ServiceID, etc.) added;

Upon receiving SIP BYE message from the SCF, the PSS Adapter shall respond with a 200 OK and send a RTSP TEARDOWN message to the Recording server.

20.1.5 Procedures at Recording server

The Recording server shall conform toRFC 2326 [25].

Upon receiving a RTSP SETUP request, the Recording server shall validate the request and setup content delivery channel(s) according to the SDP.

Upon receiving the RTSP RECORD request, the Recording server shall start to record the media properly according to the time in range header.

When finishing the recording, the Recording server shall issue a RTSP ANNOUNCE message to the PSS Adapter to report the record result. Within the message body, the Recording server shall include a XML body associated with the appid “urn:3gpp:npvr:2010:IMS-PSS-MBMS”. In the XML document, the NPVRResponse shall be present and the parameters shall be set:

- Result: the result of the recording (i.e. Completed, Error).
- AccessURL: the identifier reference to the recorded content, for UE to request later.

Upon receiving the RTSP TEARDOWN message, the Recording server shall teardown the PSS Recording Session according to RFC 2326.

20.2 NPVR Retrieving

20.2.1 Procedures at UE

After the recording is finished, the UE can get the AccessURL as identifier of the recorded content by checking the user profile.

To consume the recorded content, the UE shall perform PSS session initialization procedure as defined in sub-clause 8.2.3.2, with the following additions:

- The Request-URI shall be “PSS_COD_<content-id>”, where the content-id shall be set to the AccessURL.

20.2.2 Procedures at SCF

The SCF shall perform the procedure as defined in sub-clause 8.2.3.3.

20.2.3 Procedures at PSS Adapter

The PSS adapter shall perform the procedure as defined in sub-clause 8.2.3.4.

20.2.4 Procedures at PSS server

The PSS server shall perform the procedure as defined in sub-clause 8.2.3.5.

21 Content Referral Service (CRS)

Content referral service has two different scenarios, namely user initiated content referral service and service provider initiated content referral service. They are specified in sub-clauses 21.1 and 21.2, respectively.

21.1 User Initiated CRS

21.1.1 General Description

Content referral service enables a user to recommend a PSS or MBMS user service to another user.

Following is a general call flow for user initiated content referral service

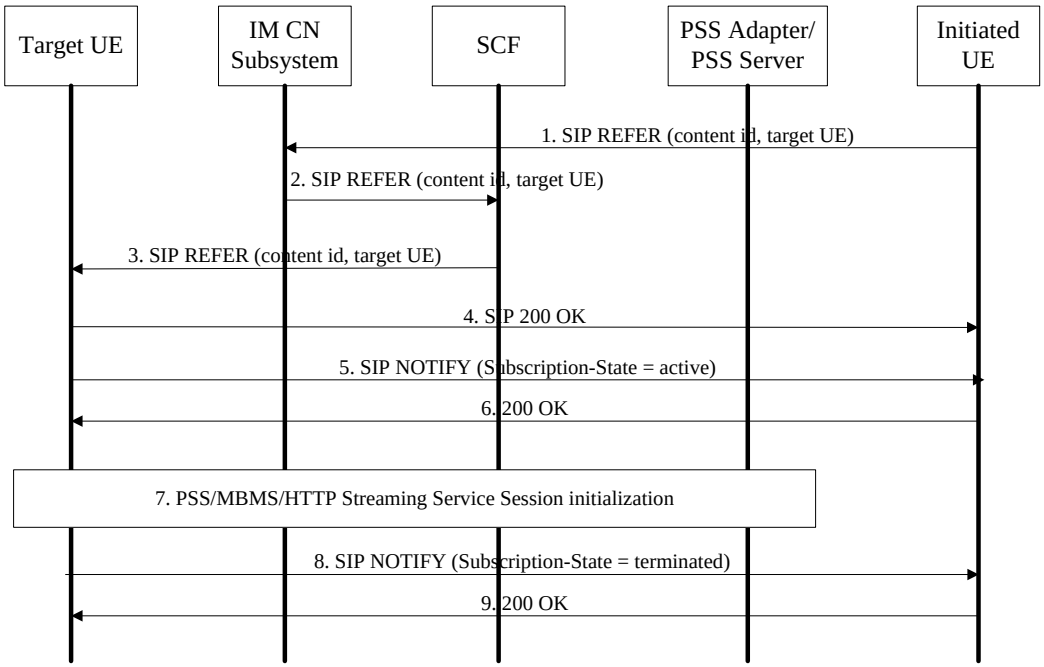

Figure 46: User initiated content referral service

1-2 The Initiated UE issues a content referral request through the IM CN Subsystem to the SCF. The request carries the necessary parameters indicating the type of the recommended service, (e.g. PSS, MBMS or HTTP Streaming service), content identifier, identifier of target UE.

3 The SCF performs service authorization, to check:

- If the initiated UE is allowed to perform content referral service;
- If the target UE/User accepts content referral service from the initiated UE;
- Following that, the SCF forwards content referral service request through the IM CN Subsystem to the target UE. And the user of target UE may deny the request even if the SCF authorized.

4 The target UE sends a proper response to the initiated UE.

5 The target UE issues a SIP NOTIFY to the initiated UE through the IM CN Subsystem, indicating the session initialization of the recommended service is about to start.

6. The initiated UE response with 200 OK.

7 The target UE initiates the service indicated in the content referral service request, e.g.

- PSS session initiation as per the procedures defined in clause 8.2.3, or
- MBMS session initiation as per the procedures defined in clause 8.3.3

8 The target UE issues a SIP NOTIFY to the initiated UE, indicating the session initialization of the recommended service is done.

9. The initiated UE response with 200 OK.

21.1.2 Procedure at Initiated UE

When the initiated UE wants to recommend a PSS or MBMS user service to the target UE, the initiated UE shall issue a SIP REFER request to target UE as defined in [43], and the REFER message is routed to SCF. The content of the SIP REFER request shall be as follows:

- The Request-URI in the REFER request shall be set to the IMPU of the target UE;

- From shall be set to the IMPU of the initiated UE;
- To headers shall be set to the public GRUU or the IMPU of the target UE;
- Refer-To shall include the following parameters:
  - the SIP URI shall be set to:
    - "PSS_COD_<content-id>@<Domain name>" for CoD service, wherein content-id shall be globalContentID defined in [27].
    - the well known PSI (Public Service Identifier) for live service, i.e. Live Stream@<Domain name>.
  - the "method" shall be set to "INVITE".
- Content-Type: shall be set to "application/3gpp-ims-pss-mbms-bookmark+xml", if the message body contains a bookmark.
- The message body may contain a bookmark as defined in annex J, to indicate the recommended start time of the recommended service.

When receives the NOTIFY message, the initiated UE shall send a 200 OK to the target UE.

21.1.3 Procedure at SCF

Upon receiving a SIP REFER request, the SCF shall check:

- If the initiated UE is allowed to perform content referral service;
- If the target UE/User accepts content referral service from the initiated UE, which is set beforehand;

If the request is authorized, the SCF then forwards the request to the target UE.

21.1.4 Procedure at Target UE

When receiving a SIP REFER request, the target UE shall check whether or not it is capable of initiating the indicated PSS or MBMS user service, if the target UE is capable of initiating the service, the target UE shall send a 202 message immediately, and the 202 message shall be the same as the received REFER request except the "contact" head field:

- Contact shall be set to the IMPU of the target UE;

Then the target UE shall send an immediate NOTIFY message as defined in [43], to initiated UE for informing the status. The NOTIFY message shall be set as follows:

- From shall be set to the IMPU of the target UE;
- To headers shall be set to IMPU of the initiated UE;
- Content-Type shall be set to "message/sipfrag";
- Event shall be set to "refer";
- Subscription-State shall be set to "active";

When the target UE have sent the NOTIFY message, it shall initiate the PSS or MBMS service initialization according to the "Refer-To" message header of the REFER. If the REFER request further contains a bookmark, the target UE shall start the consumption of the service at the time point indicated in the bookmark.

After completion of the service initiation, it shall send another NOTIFY message to initiated UE, and the "Subscription-State" of such NOTIFY message shall be set to "terminated".

21.2 Service Provider Initiated CRS

21.2.1 General Description

The service provider initiated CRS service procedures include 3 major steps:

8) CRS event detection. This step is triggered according to service provider's policy or user profile. The events may include new content arrival referral, presence update, request from the UE, channel change report from UE etc.

9) CRS information generation for specific user according to the preconfigured content referral policy. The CRS info includes one or more content identifiers (Annex O), identifying the recommended content. The user profile (e.g. user preference, watching habits etc) is used for filtering/sorting of CRS info.

10) CRS information delivery to the UE. SCF sends SIP MESSAGE containing the generated CRS information to the UE.

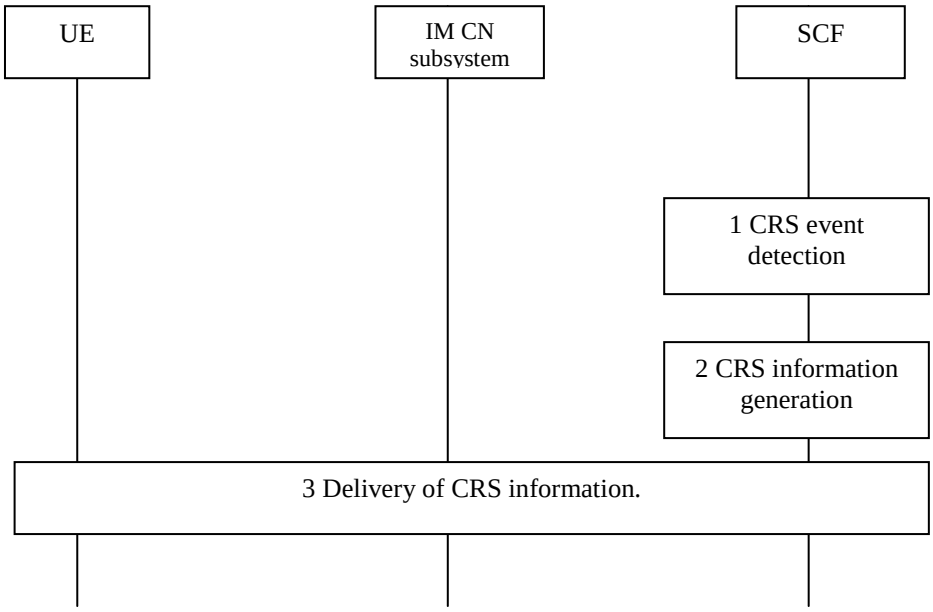

Figure 47: Procedure for CRS provided by SCF

21.2.2 Procedure at Initiated UE

Upon reception of a SIP MESSAGE request, the UE shall identify it as a content referral message by comparing the Content-Type header with "application/3gpp-ims-pss-mbms-contentreferral+xml". Following that, the UE shall parse the XML document according to the schema defined in Annex O, and then take appropriate further action, e.g. initiate a PSS session as defined in sub-clause 8.2.3.2

21.2.3 Procedure at SCF

Upon detection of a CRS event for a user, the SCF shall generate a SIP MESSAGE request and send it to the target UE via IM CN Subsystem

The contents of the above SIP MESSAGE request shall be as follows:

The Request-URI of the SIP MESSAGE request shall be set to the IMPU of the target UE.

The From header shall be set to the SIP URI of the SCF.

The To header shall be set to the IMPU of the target UE.

The Content-Type header shall be set to "application/3gpp-ims-pss-mbms-contentreferral+xml".

The message body shall carry an XML document conforming to the XML schema defined in annex Y:

- ContentIdentifier shall be set to the content identifier related to the referral, if present;
- ReferralSender shall be set to the identifier of the originator who provides the referral, if present;
- ReferralReceiver shall be set to the identifier of target UE, if present.
- ContentReferralInfo shall be set to the information for content referral;

Annex A (normative): 3gpp_rtsp application

The 3gpp_rtsp application defines a set of RTSP parameters. An RTSP parameter is included in "a=fmtp" line of the SDP and is expressed in the form of parameter=value.

```
a=fmtp:3gpp_rtsp <parameter name>=<value>
```

The "version" parameter sets the "version-number" representing the version of RTSP that will be used in the RTSP media stream. The version number shall be "1.0" in this version of the specification. The RTSP version shall be included in all SDP offers and answers. The same version shall be used by all entities.

```
a=fmtp:3gpp_rtsp version=<version-number>
```

To exchange RTSP header fields within the SIP offer/answer, the RTSP media stream allows for attributes with the following format:

```
a=fmtp:3gpp_rtsp h-<header-name>=<header-value>,
```

where "header-name" is the name of the RTSP header field being described and "header-value" is the value of the RTSP header field. The value of the header-name is case insensitive. The value of the header-value is interpreted according to the rules of RTSP. The list of authorized headers in the SIP offer/answer is as follows:

- Session: this is the RTSP session id as established by the PSS adapter to be used for further RTSP transactions.
- Offset: this is a range value to be used in the first PLAY request by the UE.
- Supported" header filed with the following feature tags (see 3GPP TS 26.234 [8]):
  - "3gpp-switch" feature-tag, clause 5.5.4.2.
  - "3gpp-switch-req-sdp" feature-tag, clause 5.5.4.3.
  - "3gpp-switch-stream" feature-tag, clause 5.5.4.4.
- Require (see 3GPP TS 26.234 [8]).
- Pipelined-Requests (see 3GPP TS 26.234 [8]).
- 3GPP-Adaptation (see 3GPP TS 26.234 [8]).

UE, PSS Servers and PSS adapters shall support all these headers and feature tags.

Annex B (informative): Examples

Void (TBD).

Annex C (normative): Void

Annex D (normative): XML Schema for PSS and MBMS commands

```
<?xml version="1.0" encoding="UTF-8"?>
<xs:schema xmlns:xs="http://www.w3.org/2001/XMLSchema"
xmlns:pss="urn:org:etsi:ngn:params:xml:ns:PssContentSwitchData"
xmlns:mbms="urn:org:etsi:ngn:params:xml:ns:MbmsContentSwitchData"
xmlns:local="urn:org:etsi:ngn:params:xml:ns:PssMbmscommand"
targetNamespace="urn:org:etsi:ngn:params:xml:ns:PssMbmscommand" elementFormDefault="qualified"
attributeFormDefault="unqualified">
    <xs:import namespace="urn:org:etsi:ngn:params:xml:ns:PssContentSwitchData"
schemaLocation="PssSwitchData.xsd"/>
    <xs:import namespace="urn:org:etsi:ngn:params:xml:ns:MbmsContentSwitchData"
schemaLocation="MbmsSwitchData.xsd"/>
    <xs:element name="ImsPssMbmsCommand">
        <xs:complexType>
            <xs:choice>
                <xs:element name="PssSwitch" type="local:tPssSwitch" minOccurs="0"
maxOccurs="unbounded"/>
                <xs:element name="MbmsSwitch" type="local:tMbmsSwitch" minOccurs="0"
maxOccurs="unbounded"/>
           </xs:choice>
        </xs:complexType>
    </xs:element>
        <xs:complexType name="tPssSwitch">
            <xs:choice>
            <xs:element ref="pss:PssSwitchData"/>
            </xs:choice>
        </xs:complexType>
        <xs:complexType name="tMbmsSwitch">
        <xs:choice>
            <xs:element ref="mbms:MbmsSwitchData"/>
        </xs:choice>
        </xs:complexType>
</xs:schema>
```

Annex E (normative): XML Schemas for the PSS content switch data

This annex specifies XML schemas for PSS content switch data:

```
<?xml version="1.0" encoding="UTF-8"?>
<xs:schema xmlns:xs="http://www.w3.org/2001/XMLSchema"
xmlns="urn:org:etsi:ngn:params:xml:ns:PssContentSwitchData"
targetNamespace="urn:org:etsi:ngn:params:xml:ns:PssContentSwitchData" elementFormDefault="qualified"
attributeFormDefault="unqualified">
    <xs:element name="PssSwitchData">
                    <xs:complexType>
              <xs:sequence>
        <xs:element name="ContentID" type="xs:string" minOccurs="0"/>
        <xs:element name="DateTime" type="xs:dateTime" minOccurs="0"/>
        <xs:element name="Extension" type="tExtension" minOccurs="0"/>
        <xs:any namespace="##other" processContents="lax" minOccurs="0" maxOccurs="unbounded"/>
              </xs:sequence>
         </xs:complexType>
    </xs:element>
    <xs:complexType name="tExtension">
          <xs:sequence>
        <xs:any processContents="lax" minOccurs="0" maxOccurs="unbounded"/>
          </xs:sequence>
    </xs:complexType>
</xs:schema>
```

Annex F (normative): XML Schemas for the MBMS content switch data

This annex specifies XML schemas for MBMS content switch data:

```
<?xml version="1.0" encoding="UTF-8"?>
<xs:schema xmlns="urn:org:etsi:ngn:params:xml:ns:MbmsContentSwitchData"
xmlns:xs="http://www.w3.org/2001/XMLSchema"
targetNamespace="urn:org:etsi:ngn:params:xml:ns:MbmsContentSwitchData"
elementFormDefault="qualified" attributeFormDefault="unqualified">
    <xs:element name="MbmsSwitchData">
          <xs:complexType>
               <xs:sequence>
                    <xs:element name="ServiceId" type="xs:string" minOccurs="0"/>
        <xs:element name="ProgrammeId" type="xs:string" minOccurs="0"/>
        <xs:element name="DateTime" type="xs:dateTime" minOccurs="0"/>
        <xs:element name="Extension" type="tExtension" minOccurs="0"/>
        <xs:any namespace="##other" processContents="lax" minOccurs="0" maxOccurs="unbounded"/>
               </xs:sequence>
          </xs:complexType>
    </xs:element>
    <xs:complexType name="tExtension">
          <xs:sequence>
        <xs:any processContents="lax" minOccurs="0" maxOccurs="unbounded"/>
          </xs:sequence>
    </xs:complexType>
</xs:schema>
```

Annex G (normative): XML Schema for PSS and MBMS UE Device Capabilities

This XML Schema defines the UE device capabilities that are signalled by the UE within the body of the SIP SUBSCRIBE request when attaching to the service. Another document is also part of the body to describe PSS Capabilities as defined in TS 26.234.

```
<?xml version="1.0" encoding="UTF-8"?>
<xs:schema
targetNamespace="urn:3GPP:metadata:2008:IMS-PSS-MBMS:UECap"
xmlns:xs="http://www.w3.org/2001/XMLSchema"
elementFormDefault="qualified" attributeFormDefault="unqualified">

    <xs:annotation>
        <xs:documentation xml:lang="en">
Defines the capabilities of the UE that is currently associated with the user
 </xs:documentation>
    </xs:annotation>

    <xs:element name="UEInformation" type="tUEProfile"/>
        <xs:complexType name="tUEProfile">
            <xs:sequence>
                <xs:element name="UserEquipmentModelName" type="xs:string"/>
                <xs:element name="UserEquipmentModelVersion" type="xs:string"/>
                <xs:element name="UserEquipmentID" type=" tUEID"/>
                <xs:element name="UserEquipmentClass" type="tUserEquipmentClass"/>
                <xs:element name="UserEquipmentMBMSCapable" type="xs:boolean"/>
            </xs:sequence>
        </xs:complexType>

    <xs:simpleType name="tUEID" final="list restriction">
<xs:annotation>
        <xs:documentation>
            <label xml:lang="en">User Equipment ID</label>
    <definition xml:lang="en">Unique Identifier for the UE(eg;Could be MAC address of UE)
</definition>
        </xs:documentation>
    </xs:annotation>
        <xs:restriction base="xs:string">
            <xs:minLength value="0"/>
            <xs:maxLength value="16"/>
        </xs:restriction>
    </xs:simpleType>

    <xs:simpleType name="tUserEquipmentClass" final="list restriction">
    <xs:annotation>
        <xs:documentation>
            <label xml:lang="en">User Equipment class</label>
    <definition xml:lang="en">Specifies the type of UE</definition>
        </xs:documentation>
    </xs:annotation>
    <xs:restriction base="xs:string">
        <xs:enumeration value="STB"> </xs:enumeration>
        <xs:enumeration value="PC"> </xs:enumeration>
        <xs:enumeration value="Handset"> </xs:enumeration>
    </xs:restriction>
    </xs:simpleType>
</xs:schema>
```

Annex H (normative): XML Schema for Service Attachment Information

This annex describes the XML schema for the service attachment information to be returned to UE by SDF.

```
<?xml version="1.0" encoding="UTF-8"?>
<xs:schema xmlns:xs="http://www.w3.org/2001/XMLSchema" elementFormDefault="qualified"
attributeFormDefault="unqualified">

    <xs:element name="SSF" type="tSSF">
        <xs:annotation>
            <xs:documentation>XML Body of the SDF SIP Notify Response</xs:documentation>
        </xs:annotation>
    </xs:element>

    <xs:complexType name="tSSF">
        <xs:sequence>
            <xs:element name="Description" type="tMultilingual" minOccurs="0"
maxOccurs="unbounded"/>
            <xs:element name="ServiceProvider" type="tSSFServiceProvider" minOccurs="0"/>
            <xs:element name="Pull" type="tSSFPull" minOccurs="0" maxOccurs="unbounded"/>
            <xs:element name="Push" type="tSSFPush" minOccurs="0" maxOccurs="unbounded"/>
            <xs:element name="MBMSSecurityProcedure" type="tMBMSSec" minOccurs="0"/>
            <xs:element name="Extension" type="tExtension" minOccurs="0"/>
            <xs:any namespace="##other" processContents="lax" minOccurs="0" maxOccurs="unbounded"/>
        </xs:sequence>
        <xs:attribute name="ID" type="tHexadecimal16bit" use="required"/>
        <xs:attribute name="Technology" type="xs:string" use="required"/>
        <xs:attribute name="Version" type="tVersion">
            <xs:annotation>
                <xs:documentation>The version number is incremented when one or more attributes of
the SSF element have changed, so that the receiver knows whether it should update its data or
not.</xs:documentation>
            </xs:annotation>
        </xs:attribute>
        <xs:anyAttribute namespace="##other" processContents="lax"/>
    </xs:complexType>

    <xs:simpleType name="tVersion">
        <xs:restriction base="xs:integer">
            <xs:minInclusive value="0"/>
            <xs:maxInclusive value="255"/>
        </xs:restriction>
    </xs:simpleType>

    <xs:complexType name="tSSFServiceProvider">
        <xs:sequence>
            <xs:element name="Name" type="tMultilingual" maxOccurs="unbounded"/>
            <xs:element name="Description" type="tMultilingual" minOccurs="0"
maxOccurs="unbounded"/>
            <xs:element name="Extension" type="tExtension" minOccurs="0"/>
        </xs:sequence>
        <xs:attribute name="DomainName" type="tDomain" use="required">
            <xs:annotation>
                <xs:documentation>It is recommended that the DomainName complies with the "preferred
name syntax" of RFC1034 clause 3.5</xs:documentation>
            </xs:annotation>
        </xs:attribute>
        <xs:attribute name="LogoURI" type="xs:anyURI" use="optional"/>
        <xs:anyAttribute namespace="##other" processContents="lax"/>
    </xs:complexType>

    <xs:simpleType name="tDomain">
        <xs:restriction base="xs:string">
            <xs:pattern value="((.|\n|\r)*)?(\.(.|\n|\r)*)+"/>
        </xs:restriction>
    </xs:simpleType>

    <xs:complexType name="tSSFPull">
        <xs:complexContent>
            <xs:extension base="tDataTypeList">
                <xs:attribute name="Location" type="xs:anyURI" use="required"/>
                <xs:anyAttribute namespace="##other" processContents="lax">
                    <xs:annotation>
```

```
                        <xs:documentation>Extension attribute to define further
data</xs:documentation>
                    </xs:annotation>
                </xs:anyAttribute>
            </xs:extension>
        </xs:complexContent>
    </xs:complexType>

    <xs:complexType name="tSSFPush">
        <xs:complexContent>
            <xs:extension base="tDataTypeList">
                <xs:attribute name="IpVersion" type="tVersion" use="optional"/>
                <xs:attribute name="MulticastAddress" type="xs:string" use="required"/>
                <xs:attribute name="MulticastPort" type="xs:unsignedShort" use="required"/>
                <xs:attribute name="SourceAddress" type="xs:string" use="optional"/>
                <xs:anyAttribute namespace="##other" processContents="lax">
                    <xs:annotation>
                        <xs:documentation> Extension attribute to define further data
></xs:documentation>
                    </xs:annotation>
                </xs:anyAttribute>
            </xs:extension>
        </xs:complexContent>
    </xs:complexType>


    <xs:complexType name="tDataTypeList">
        <xs:sequence maxOccurs="unbounded">
            <xs:element name="DataType">
                <xs:complexType>
                    <xs:sequence minOccurs="0" maxOccurs="unbounded">
                        <xs:element name="Segment">
                            <xs:annotation>
                                <xs:documentation>Segments are used to logically separate Service
Selection information</xs:documentation>
                            </xs:annotation>
                            <xs:complexType>
                                <xs:attribute name="ID" type="tHexadecimal16bit" use="required"/>
                                <xs:attribute name="Version" type="tVersion" use="optional"/>
                            </xs:complexType>
                        </xs:element>
                    </xs:sequence>
                    <xs:attribute name="Type" type="tHexadecimal8bit" use="required">
                        <xs:annotation>
                            <xs:documentation> Specify the type of Service Selection Information
that is delivered by the SSF
                    </xs:documentation>
                        </xs:annotation>
                    </xs:attribute>
                </xs:complexType>
            </xs:element>
        </xs:sequence>
    </xs:complexType>

    <xs:complexType name="tExtension">
        <xs:sequence>
            <xs:any processContents="lax" minOccurs="0" maxOccurs="unbounded"/>
        </xs:sequence>
    </xs:complexType>

    <xs:complexType name="tMultilingual">
        <xs:simpleContent>
            <xs:extension base="xs:string">
                <xs:attribute name="Language" type="tLanguage" use="required"/>
            </xs:extension>
        </xs:simpleContent>
    </xs:complexType>

    <xs:simpleType name="tLanguage">
        <xs:restriction base="xs:string">
            <xs:annotation>
                <xs:documentation>
                    <definition xml:lang="en">ISO 639-2 Language code</definition>
                </xs:documentation>
            </xs:annotation>
            <xs:minLength value="3"/>
            <xs:maxLength value="3"/>
        </xs:restriction>
```

```
    </xs:simpleType>

    <xs:simpleType name="tHexadecimal8bit">
        <xs:restriction base="xs:string">
            <xs:pattern value="[0-9a-fA-F]{1,2}"/>
        </xs:restriction>
    </xs:simpleType>

    <xs:simpleType name="tHexadecimal16bit">
        <xs:restriction base="xs:string">
            <xs:pattern value="[0-9a-fA-F]{1,4}"/>
        </xs:restriction>
    </xs:simpleType>

    <xs:simpleType name="tMBMSSec">
        <xs:restriction base="xs:string">
            <xs:enumeration value="SIP"/>
            <xs:enumeration value="HTTP"/>
        </xs:restriction>
    </xs:simpleType>

</xs:schema>
```

Annex I (normative): XML Schemas for SIP based MBMS security procedures

I.1 Bootstrapping transaction identifier

The following specifies XML schema for the bootstrapping transaction identifier to be sent within the body of SIP (re-)INVITE from the UE to the SCF.

```
<?xml version="1.0" encoding="UTF-8"?>
<xs:schema xmlns:xs="http://www.w3.org/2001/XMLSchema"
    targetNamespace="urn:3GPP:metadata:2005:MBMS:bootstrappingTransactionIdentifier"
    elementFormDefault="qualified" attributeFormDefault="unqualified">
    <xs:element name="mbmsAuthorizedSecurityRegister">
        <xs:annotation>
            <xs:documentation>MBMS Security Registration according to TS 26.237</xs:documentation>
        </xs:annotation>
        <xs:complexType>
            <xs:sequence>
                <xs:element name="btid" type="xs:string" maxOccurs="unbounded" minOccurs="1"/>
                <xs:any namespace="##other" minOccurs="0" maxOccurs="unbounded"
                    processContents="lax"/>
            </xs:sequence>
        <xs:anyAttribute processContents="skip"/>
        </xs:complexType>
    </xs:element>
</xs:schema>
```

I.2 NAF key information

The following specifies XML schema for the UE and NAF key related information to be sent within the body of HTTP request from the SCF to the BM-SC.

```
<?xml version="1.0" encoding="UTF-8"?>
<xs:schema xmlns:xs="http://www.w3.org/2001/XMLSchema"
    targetNamespace="urn:3GPP:metadata:2005:MBMS:nafKeyInfo"
    elementFormDefault="qualified" attributeFormDefault="unqualified">
    <xs:element name="mbmsAuthorizedSecurityRegister">
        <xs:annotation>
            <xs:documentation> SIP based MBMS Security Registration according to TS
26.237</xs:documentation>
        </xs:annotation>
        <xs:complexType>
            <xs:sequence>
                <xs:element name="ueIPaddress" type="xs:anyURI" maxOccurs="unbounded"
minOccurs="0"/>
                <xs:element name="muk" type="xs:anyURI" maxOccurs="unbounded" minOccurs="1"/>
                <xs:element name="mukLifeTime " type="xs:anyURI" maxOccurs="unbounded"
minOccurs="1"/>
                <xs:element name="btid" type="xs:string" maxOccurs="unbounded" minOccurs="1"/>
                <xs:element name="nafFqdn" type="xs:base64Binary" maxOccurs="unbounded"
minOccurs="1"/>
             <xs:any namespace="##other" minOccurs="0" maxOccurs="unbounded"
                    processContents="lax"/>
            </xs:sequence>
        <xs:anyAttribute processContents="skip"/>
        </xs:complexType>
    </xs:element>
</xs:schema>
```

Annex J (normative): XML Schema for nBookmark

This section defines the XML schema and its syntax for networked bookmark.

J.1 XML Schema

```
<?xml version="1.0" encoding="UTF-8"?>
<xs:schema xmlns:xs="http://www.w3.org/2001/XMLSchema"
xmlns:r11="urn:3gpp:bookmark:2012:IMS-PSS-MBMS"
xmlns:sv="urn:3gpp:bookmark:2012:IMS-PSS-MBMS:schemaVersion"
elementFormDefault="qualified" attributeFormDefault="unqualified"
targetNamespace="urn:3gpp:bookmark:2009:IMS-PSS-MBMS" xmlns:tns="urn:3gpp:bookmark:2009:IMS-PSS-
MBMS" version="2">

  <xs:annotation>
    <xs:appinfo>nBookmark version 2</xs:appinfo>
    <xs:documentation xml:lang="en">
      This Schema contains the Rel 11 extension to the nBookmark schema.
    </xs:documentation>
  </xs:annotation>


<xs:import schemaLocation="3gpp-bookmark-2012.xsd"
namespace="urn:3gpp:bookmark:2012:IMS-PSS-MBMS"/>
<xs:import schemaLocation="schema-version.xsd"
namespace="urn:3gpp:bookmark:2012:IMS-PSS-MBMS:schemaVersion"/>

    <xs:element name="BookmarkList">
        <xs:complexType>
            <xs:sequence>
                <xs:element name="Bookmark" type="tns:BookmarkType" minOccurs="0"
maxOccurs="unbounded"/>
                 <xs:element ref="sv:schemaVersion"/>
                 <xs:any namespace="##other" processContents="lax" minOccurs="0"
maxOccurs="unbounded"/>
            </xs:sequence>
  <xs:anyAttribute processContents="skip"/>
        </xs:complexType>
    </xs:element>
    <xs:complexType name="BookmarkType">
        <xs:sequence>
            <xs:element name="Creator" type="xs:anyURI"/>
            <xs:element name="Created" type="xs:dateTime"/>
            <xs:element name="ProgramId" type="xs:anyURI"/>
            <xs:element name="ProgramType" type="xs:string"/>
            <xs:element name="Offset" type="xs:duration" minOccurs="0"/>
            <xs:element name="Tag" type="xs:string" minOccurs="0"/>
            <xs:element name="Rank" type="xs:string" minOccurs="0"/>
            <xs:element name="Comment" type="xs:string" minOccurs="0"/>
            <xs:element name="Expires" type="xs:dateTime" minOccurs="0"/>
            <xs:element name="Sharing" type="xs:boolean"/>
            <xs:element name="RetrievalCount" type="xs:nonNegativeInteger" minOccurs="0"/>
            <xs:element name="RetrievalTime" type="xs:dateTime" minOccurs="0"
maxOccurs="unbounded"/>
          <xs:element ref="r11:bookmark2012" minOccurs="0" maxOccurs="unbounded"/>
            <xs:element ref="sv:delimiter"/>
<xs:any namespace="##other" processContents="lax" minOccurs="0" maxOccurs="unbounded"/>
        </xs:sequence>
        <xs:attribute name="id" type="xs:anyURI" use="required"/>
  <xs:anyAttribute processContents="skip"/>
    </xs:complexType>

</xs:schema>
```

The following schema is the release 11 extension to the nBookmark schema. The schema file name, as referenced in the main nBookmark schema, is 3gpp-bookmark-2012.xsd.

```
<?xml version="1.0" encoding="UTF-8"?>
```

```
<xs:schema targetNamespace="urn:3gpp:bookmark:2012:IMS-PSS-MBMS"
  attributeFormDefault="unqualified" elementFormDefault="qualified"
  xmlns:xs="http://www.w3.org/2001/XMLSchema"
  xmlns="urn:3gpp:bookmark:2012:IMS-PSS-MBMS">

  <xs:annotation>
    <xs:appinfo>nBookmark2012</xs:appinfo>
    <xs:documentation xml:lang="en">
      This Schema is the Rel 11 extension to the nBookmark schema.
    </xs:documentation>
  </xs:annotation>

   <xs:element name="bookmark2012">
         <xs:complexType>
             <xs:sequence>
                 <xs:element name="suggestedPresentationOffset" type="xs:duration" minOccurs="0"
maxOccurs="unbounded"/>
             </xs:sequence>
         </xs:complexType>
    </xs:element>

</xs:schema>
```

The schemaVersion schema defines two elements, *schemaVersion* and *delimiter* for compatibility purpose. The value of the *schemaVersion* is used in the main nBookmark schemas above. The value of the *schemaVersion* element and *version* attribute should be set to 2 in this release of the main nBookmark schema and increased by 1 in every future releases where new element(s) or attribute(s) are added.The *delimiter* element is used in the main nBookmark schema above to avoid the schema validation error (due to the Unique Particle Attribution rule). The *delimiter* element shall be set to a value of 0, and the element content shall be ignored by the receiveing device. The file name used for this schema is schema-version.xsd,

When a device receives an instantiation of the nBookmark compliant to this schema, it determines the schema version required to parse the instantiation as follows:

- If the device supports one or more versions of the nBookmark schema with the schema *version* attribute, then it shall use the schema that has the highest schema *version* attribute value that is equal to or less than the value in the received *schemaVersion* element;

```
<?xml version="1.0" encoding="UTF-8"?>
<xs:schema xmlns="urn:3gpp:bookmark:2012:IMS-PSS-MBMS:schemaVersion"
           xmlns:xs="http://www.w3.org/2001/XMLSchema"
           targetNamespace="urn:3gpp:bookmark:2012:IMS-PSS-MBMS:schemaVersion"
           elementFormDefault="qualified">

    <xs:element name="schemaVersion" type="xs:unsignedInt"/>
    <xs:element name="delimiter" type="xs:byte"/>

</xs:schema>
```

J.2 Syntax

This section provides the syntax for the above XML schema.

The following elements SHALL be provisioned by the UE:

- Creator: Represents the user who creates the bookmark, it shall be in the format of IMPU.
- Created: Represents the time when the bookmark is created.
- ProgramId: represents the id of the bookmarked program, which shall be globalContentID retrieved from User Service Description.
- ProgramType: represents the type of delivery for the selected program. It can be "pss" or "mbms".
- Offset: Represents the bookmark time, in the format of an offset from the beginning of the program.
- Comment: Represents any comment chosen by the user.

- Tag: Represents any categorization chosen by the user
- Rank: Represents the user favorite rating for the bookmark
- Sharing: If set, the bookmark can be shared with others.

The following elements MAY be provisioned by the UE:

- suggestedPresentationOffset: the offset in time from the bookmark created time to the bookmark presentation time at UE1.

The following elements SHALL be provisioned by the SCF:

- Retrieval count: SHALL be set to 0 and incremented by the service provider when the bookmark is retrieved.
- Expires: Represents the expire time of current bookmark;
- Id: Represents the identifier of current bookmark.

Annex K (normative): XML Schema for Content Report Configuration

The Content Reporting Configuration Info-package shall contain an XML document complies with the following schema.

```
<?xml version="1.0" encoding="UTF-8"?>
<xs:schema xmlns:xs="http://www.w3.org/2001/XMLSchema"
xmlns="urn:org:etsi:ngn:params:xml:ns:ContentReportingConfiguration"
targetNamespace="urn:org:etsi:ngn:params:xml:ns:ContentReportingConfiguration"
elementFormDefault="qualified" attributeFormDefault="unqualified">
    <xs:annotation>
        <xs:documentation xml:lang="en">Indicates configuration information of content report
function.</xs:documentation>
    </xs:annotation>

    <xs:element name="ReportTimer" type="xs:restriction">
        <xs:restriction base="xs:integer">
            <xs:minLength value="0"/>
            <xs:maxLength value="3600"/>
        </xs:restriction>
    </xs:element>

</xs:schema>
```

Annex L (normative): XML Schema for Parental Control Service

This clause defines the XML schema and its syntax for networked bookmark.

```
<?xml version="1.0" encoding="UTF-8"?>
<xs:schema targetNamespace="urn:3gpp:ParentalControl:2010:IMS-PSS-MBMS"
xmlns:tns="urn:3gpp:ParentalControl:2010:IMS-PSS-MBMS" xmlns:xs="http://www.w3.org/2001/XMLSchema"
xmlns:bcast="urn:oma:xml:bcast:sg:fragments:1.0" elementFormDefault="qualified"
attributeFormDefault="unqualified">
<xs:import namespace="urn:oma:xml:bcast:sg:fragments:1.0" schemaLocation="imports/OMA-SUP-
XSD_bcast_sg_fragments-V1_0-20090212-A.xsd"/>
   <xs:annotation>
      <xs:documentation xml:lang="en">
   command for parental control associated with the parent
      </xs:documentation>
   </xs:annotation>
   <xs:element name="IPTVParentalControl" type="tns:tIPTVParentalControl" />
   <xs:complexType name="tIPTVParentalControl">
      <xs:sequence maxOccurs="unbounded">
         <xs:choice>
            <xs:element name="PCBlockingRequest" type="tns:tPCBlockingRequest"/>
            <xs:element name="PCAllowingRequest" type="tns:tPCAllowingRequest"/>
         </xs:choice>
      </xs:sequence>
   </xs:complexType>
   <xs:complexType name="tPCBlockingRequest">
      <xs:sequence>
         <xs:element name="ChildUserID" type="xs:anyURI"/>
         <xs:element name="ParentUserID" type="xs:anyURI"/>
         <xs:element name="ProgramID" type="bcast:globalContentID"/>
      </xs:sequence>
   </xs:complexType>
   <xs:complexType name="tPCAllowingRequest">
      <xs:sequence>
         <xs:element name="ChildUserID" type="xs:anyURI"/>
         <xs:element name="ParentUserID" type="xs:anyURI"/>
         <xs:element name="ProgramID" type="bcast:globalContentID"/>
      </xs:sequence>
   </xs:complexType>
</xs:schema>
```

Annex M (normative): PSS&MBMS User Profile Extension

This section defines the XML schema extension for parental control service.

```
<?xml version="1.0" encoding="UTF-8"?>

<xs:schema targetNamespace="urn:3gpp:ParentalControlProfile:2010:IMS-PSS-MBMS"
xmlns:tns="urn:3gpp:ParentalControlProfile:2010:IMS-PSS-MBMS"
xmlns:xs="http://www.w3.org/2001/XMLSchema" xmlns:bcast="urn:oma:xml:bcast:sg:fragments:1.0"
elementFormDefault="qualified" attributeFormDefault="unqualified">

<xs:import namespace="urn:oma:xml:bcast:sg:fragments:1.0" schemaLocation="imports/OMA-SUP-
XSD_bcast_sg_fragments-V1_0-20090212-A.xsd"/>


   <xs:element name="ParentalControl" type="tns:tParentalControl" />

   <xs:complexType name="tParentalControl">

      <xs:sequence>

         <xs:element name="PCBlockingRule" type="tns:tPCBlockingRule" minOccurs="0"
maxOccurs="unbounded"/>

         <xs:element name="PCAllowingRule" type="tns:tPCAllowingRule" minOccurs="0"
maxOccurs="unbounded"/>

      </xs:sequence>

   </xs:complexType>

   <xs:complexType name="tPCBlockingRule">

      <xs:sequence>

         <xs:element name="ParentUserID" type="xs:anyURI"/>

         <xs:element name="ProgramID" type="bcast:globalContentID"/>

      </xs:sequence>

   </xs:complexType>

   <xs:complexType name="tPCAllowingRule">

      <xs:sequence>

         <xs:element name="ParentUserID" type="xs:anyURI"/>

         <xs:element name="ProgramID" type="bcast:globalContentID"/>

      </xs:sequence>

   </xs:complexType>

</xs:schema>
```

Annex N (normative): XML Schema for Network PVR

This annex describes the XML schema for the NPVR request sends by UE to the SCF.

```
<?xml version="1.0" encoding="UTF-8"?>

<xs:schema xmlns:tns="urn:3gpp:npvr:2010:IMS-PSS-MBMS" xmlns:xs="http://www.w3.org/2001/XMLSchema" "
targetNamespace="urn:3gpp:npvr:2010:IMS-PSS-MBMS" elementFormDefault="qualified"
attributeFormDefault="unqualified">

   <xs:import namespace="urn:oma:xml:bcast:sg:fragments:1.0" schemaLocation="imports/OMA-SUP-
XSD_bcast_sg_fragments-V1_0-20090212-A.xsd"/>

   <xs:element name="PVR">

      <xs:complexType>

         <xs:choice>

            <xs:element name="NPVRRequest" type="tns:tNPVRRequest"/>

            <xs:element name="NPVRResponse" type="tns:tNPVRRequest"/>

         </xs:choice>

      </xs:complexType>

   </xs:element>

   <xs:complexType name="tNPVRRequest">

      <xs:sequence>

         <xs:element name="ProgramID" type="xs:anyURI" minOccurs="0"/>

         <xs:element name="ServiceID" type="xs:anyURI"/>

         <xs:element name="RecordStartTime" type="xs:dateTime"/>

         <xs:element name="RecordDuration" type="xs:duration"/>

      </xs:sequence>

   </xs:complexType>

   <xs:complexType name="tNPVRResponse">

      <xs:sequense>

         <xs:element name="ProgramID" type="xs:string" minOccurs="0"/>

         <xs:element name="ServiceID" type="bcast:globalContentID" minOccurs="0"/>

         <xs:element name="RecordStartTime" type="xs:dateTime" minOccurs="0"/>

         <xs:element name="Result" type="tns:tRequestStatus"/>

         <xs:element name="AccessURL" type="xs:anyURI" minOccurs="0"/>

      </xs:sequense>

   </xs:complexType>

   <xs:simpleType name="tRequestStatus">

      <xs:restriction base="xs:string">

         <xs:enumeration value="Recording Error"/>

         <xs:enumeration value="Recording Captured"/>

         <xs:enumeration value="Recording Completed"/>
```

```
      </xs:restriction>

   </xs:simpleType>

</xs:schema>
```

Annex O (normative): XML Schema for Service Provider Initiated Content Referral Service (CRS)

```
<?xml version="1.0" encoding="UTF-8"?>

<xs:schema xmlns="urn:3gpp:contentreferral:2010:IMS-PSS-MBMS"
xmlns:xs="http://www.w3.org/2001/XMLSchema"  targetNamespace="urn:3gpp:contentreferral:2010:IMS-PSS-
MBMS" attributeFormDefault="unqualified">

   <xs:element name="ContentReferral" type="tContentReferral"/>

   <xs:complexType name="tContentReferral">

      <xs:sequence>

         <xs:element name="ReferralSender" type="xs:string" minOccurs="0"/>

         <xs:element name="ReferralReceiver" type="xs:string" minOccurs="0"/>

         <xs:element name="ReferredContentIdentifier" type="xs:anyURI"/>

         <xs:element name="ReferralReason" type="xs:string" minOccurs="0"/>

      </xs:sequence>

   </xs:complexType>

</xs:schema>
```

Annex P (informative): File Naming convention for XML schemas

This section defines the file naming convention for XML schemas.

Convention:

The convention used for file name is "SchemaName.xsd", where SchemaName is the name of the last part of the targetNamespace of the schema as shown within the schema transforming ":" into "-" e.g. "3gpp:bookmark:2009:IMS-PSS-MBMS" becomes "3gpp-bookmark-2009-IMS-PSS-MBMS".

File names:

Therefore file names used in the present specification are:

- "org-etsi-ngn-params-xml-ns-PssMbmscommand.xsd" for the XML schema defined in Annex D for PSS and MBMS commands

- "org-etsi-ngn-params-xml-ns-PssContentSwitchData.xsd" for the XML schema defined in Annex E for PSS Content Switch data

- "org-etsi-ngn-params-xml-ns-MbmsContentSwitchData.xsd" for the XML schema defined in Annex F for MBMS Content Switch data

- "3GPP-metadata-2008-IMS-PSS-MBMS-UECap.xsd" for the XML schema defined in Annex G for PSS and MBMS UE Device Capabilities

- "3GPP-metadata-2005-MBMS-bootstrappingTransactionIdentifier.xsd" for the XML schema defined in Annex I.1 for Service Attachment Information

- "3GPP-metadata-2005-MBMS-nafKeyInfo.xsd" for the XML schema defined in Annex I.2 for Service Attachment Information

- "3gpp-bookmark-2009-IMS-PSS-MBMS.xsd" for the XML schema defined in Annex J on network bookmark

Annex Q (normative): Content Reporting Configuration Info Package

This annex contains the necessary information for the registration of Content Reporting Configuration Info Package into IANA.

Q.1 Overall Description

During service consumption (e.g. with a PSS/MBMS session), the centre server, e.g. Server Control Function, may request to re-config the content report behaviours. The configuration does not require user intervention

The Content Reporting Configuration Info Package is used to transport the necessary configuration parameters regarding the content reporting function.

The Content Reporting Configuration Info Package is defined for any multimedia application that using content reporting. Any application, where sending content reporting configuration information, using the SIP INFO method is required, can use the Content Reporting Configuration Info Package.

Q.2 Applicability

The Info Package mechanism for transporting content reporting configuration information has been chosen as an optional feature. The mechanism also allows content reporting configuration information to be sent inside an existing dialog, using the same signalling path as other SIP messages within the dialog, rather than having to establish a separate dialog.

Q.3 Info Package Name

The name of the Info Package is: **ContentReportConfig**.

Q.4 Info Package Parameters

No parameters are defined for the **Content Reporting Configuration** Info Package.

Q.5 SIP Option Tags

No SIP option tags are defined for the **Content Reporting Configuration** Info Package.

Q.6 INFO Message Body Parts

Q.6.1 General

Configuration information of Content Reporting function on a device is sent as part of the message body of the SIP INFO request. This subclause defines the information and syntax associated with the message body part used for transporting the information.

Q.6.2 SIP Content-Type header field value

The value of the SIP Content-Type header field associated with the **Content Reporting Configuration** Info Package message body is:

application/3gpp-ims-pss-mbms-contentReportConfig+xml”

Q.6.3 SIP Content-Disposition header field value

The value of the SIP Content-Disposition header field associated with the **Content Reporting Configuration** Info Package message body is: Info-Package.

Q.6.4 Message body syntax

The syntax of the **Content Reporting Configuration** Info Package message body is based on the rules defined in Annex K.

Q.7 Info Package Usage Restrictions

No usage restrictions are defined for the **Content Reporting Configuration** Info Package.

Q.8 Rate of INFO Requests

No maximum rate or minimum rate is defined for sending INFO requests associated with the **Content Reporting Configuration** Info Package.

Q.9 Info Package Security Considerations

No additional security mechanism is defined for the **Content Reporting Configuration** Info Package.

The security of the **Content Reporting Configuration** Info Package is based on the generic security mechanism provided for the underlying SIP signalling.

Q.10 Implementation Details and Examples

None

Annex R (informative): Change history

Change history							
Date	**TSG #**	**TSG Doc.**	**CR**	**Rev**	**Subject/Comment**	**Old**	**New**
2008-12	42	SP-080675			Presented for approval at TSG SA#42	1.0.0	2.0.0
2008-12	42				Approved at TSG SA#42	2.0.0	8.0.0
2009-03	43	SP-090007	0001	2	Corrections on layout of structure, references, numbering of figures of TS 26.237	8.0.0	8.1.0
2009-03	43	SP-090007	0002	1	Improvement of general descriptions of TS 26.237	8.0.0	8.1.0
2009-03	43	SP-090007	0003	1	Security procedures of IMS based MBMS user service	8.0.0	8.1.0
2009-03	43	SP-090007	0004	2	Corrections and clarifications to policy and charging control	8.0.0	8.1.0
2009-03	43	SP-090007	0005	2	Corrections and clarifications to IMS based PSS and MBMS User Service; Protocols	8.0.0	8.1.0
2009-03	43	SP-090007	0006	2	Network-initiated PSS streaming session teardown	8.0.0	8.1.0
2009-03					Tidy up title	8.1.0	8.1.1
2009-06	44	SP-090250	0008	1	Selection of MBMS security option	8.1.1	8.2.0
2009-06	44	SP-090250	0009		Corrections and clarifications to SIP based MBMS security procedures	8.1.1	8.2.0
2009-06	44	SP-090250	0010		Corrections and clarifications to security related clauses	8.1.1	8.2.0
2009-09	45	SP-090563	0014		Corrections and clarifications to security procedures	8.2.0	8.3.0
2009-09	45	SP-090570	0013		Blending of presence and PSS/MBMS user services	8.3.0	9.0.0
2009-09	45	SP-090570	0016	1	IMS Based UGC Service	8.3.0	9.0.0
2009-09	45	SP-090570	0017		Networked Bookmark Service	8.3.0	9.0.0
2009-09	45	SP-090570	0019	2	Service Selection Information Update	8.3.0	9.0.0
2009-09	45	SP-090570	0020	2	Clarification on Content Identifier in Session Initialization Procedure	8.3.0	9.0.0
2009-12	46	SP-090707	0021	1	IMS based MBMS download service	9.0.0	9.1.0
2009-12	46	SP-090707	0022	1	Inter UE Transfer	9.0.0	9.1.0
2009-12	46	SP-090701	0023	2	Clarification on IMS based PSS streaming	9.0.0	9.1.0
2009-12	46	SP-090707	0025	3	SIP Info for content switching	9.0.0	9.1.0
2009-12	46	SP-090707	0027	1	Session set-up for IMS based download unicast service	9.0.0	9.1.0
2009-12	46	SP-090707	0028	1	Architecture for IMS based download unicast service	9.0.0	9.1.0
2009-12	46	SP-090707	0031		XML schema and syntax for nBookmark service	9.0.0	9.1.0
2010-03	47	SP-100022	0032		Corrections to Inter UE Session Transfer	9.1.0	9.2.0
2010-06	48	SP-100299	0035		Corrections to Introduction	9.2.0	9.3.0
2010-06	48	SP-100299	0036	2	Corrections to SIP messaging diagrams and descriptions	9.2.0	9.3.0
2010-06	48	SP-100299	0037	2	Modification on IMS based PSS download session initiation	9.2.0	9.3.0
2010-06	48	SP-100299	0038	1	IMS based PSS download session termination	9.2.0	9.3.0
2010-09	49	SP-100463	0039		Corrections to SDP attributes in UE-initiated MBMS session	9.3.0	9.4.0
2010-09	49	SP-100463	0042		Removal of timer modification	9.3.0	9.4.0
2010-09	49	SP-100463	0043		Clarifications for MBMS to PSS switching procedure	9.3.0	9.4.0
2010-09	49	SP-100461	0045	2	Correction on User Service Discovery	9.3.0	9.4.0
2010-09	49	SP-100469	0041	3	Modificaton of “Procedure for providing missing parameters” procedure	9.4.0	10.0.0
2011-03	51	SP-110046	0046	4	Content Report Configuration	10.0.0	10.1.0
2011-03	51	SP-110046	0047		Replication for Inter-UE-Session transfer in Push Mode	10.0.0	10.1.0
2011-03	51	SP-110046	0048	2	Inter-UE-Session transfer in Pull Mode	10.0.0	10.1.0
2011-03	51	SP-110046	0050	3	Parental Control Service	10.0.0	10.1.0
2011-03	51	SP-110046	0051	1	Forced Playout Constraints	10.0.0	10.1.0
2011-03	51	SP-110046	0052	3	IMS based HTTP Streaming	10.0.0	10.1.0
2011-03	51	SP-110038	0053	2	Modification of XML schema for nBookmark	10.0.0	10.1.0
2011-03	51	SP-110046	0055	1	Network Personal Video Recording service	10.0.0	10.1.0
2011-03	51	SP-110046	0056	1	Content Referal Service	10.0.0	10.1.0
2011-06	52	SP-110303	0058	1	Definition of MIME type for bookmarking	10.1.0	10.2.0
2011-06	52	SP-110307	0059		File naming convention for XML schemas	10.1.0	10.2.0
2011-09	53	SP-110547	0062		On Resolving IETF dependencies	10.2.0	10.3.0
2011-11	54	SP-110788	0065		On Resolving IETF dependencies	10.3.0	10.4.0
2011-11	54	SP-110796	0066	1	Registration of Content Reporting Configuration Info Package	10.3.0	10.4.0
2012-06	56	SP-120222	0067		Corrections on Content Report Info Package	10.4.0	10.5.0
2012-06	56	SP-120224	0068	2	Media Presentation Synchronization in MBMS	10.5.0	11.0.0
2012-06	56	SP-120224	0069	3	Media Presentation Synchronization in Inter-UE Session Replication	10.5.0	11.0.0
2013-06	60	SP-130182	0074	1	Clarification on File Repair Procedure in IMS-based MBMS Download Service	11.0.0	11.1.0
2013-09	61	SP-130345	0077	1	Corrections on SDP Attributes	11.1.0	11.2.0
2013-12	62	SP-130568	0082	1	Correction to references	11.2.0	11.3.0