ARIB STD-T63-27.007 V11.8.0

AT command set for User Equipment (UE)

(Release 11)

Refer to “Industrial Property Rights (IPR)” in the preface of ARIB STD-T63 for Related Industrial Property Rights. Refer to “Notice” in the preface of ARIB STD-T63 for Copyrights.

3GPP TS 27.007 V11.8.0 (2013-09)

Technical Specification

3rd Generation Partnership Project;
Technical Specification Group Core Network and Terminals;
AT command set for User Equipment (UE)
(Release 11)

The present document has been developed within the 3rd Generation Partnership Project (3GPP TM) and may be further elaborated for the purposes of 3GPP.

The present document has not been subject to any approval process by the 3GPP Organizational Partners and shall not be implemented.
This Specification is provided for future development work within 3GPP only. The Organizational Partners accept no liability for any use of this Specification.
Specifications and reports for implementation of the 3GPP TM system should be obtained via the 3GPP Organizational Partners' Publications Offices.

Keywords
UMTS, GSM, command, terminal, LTE

3GPP

Postal address

3GPP support office address
650 Route des Lucioles - Sophia Antipolis
Valbonne - FRANCE
Tel.: +33 4 92 94 42 00 Fax: +33 4 93 65 47 16

Internet
http://www.3gpp.org

Copyright Notification

No part may be reproduced except as authorized by written permission.
The copyright and the foregoing restriction extend to reproduction in all media.

© 2013, 3GPP Organizational Partners (ARIB, ATIS, CCSA, ETSI, TTA, TTC).
All rights reserved.

UMTS™ is a Trade Mark of ETSI registered for the benefit of its members
3GPP™ is a Trade Mark of ETSI registered for the benefit of its Members and of the 3GPP Organizational Partners
LTE™ is a Trade Mark of ETSI currently being registered for the benefit of its Members and of the 3GPP Organizational Partners
GSM® and the GSM logo are registered and owned by the GSM Association

Contents

Foreword 9
1 Scope 9
2 References 10
3 Definitions and abbreviations 16
3.1 Definitions 16
3.2 Abbreviations 16
4 AT command syntax 17
4.0 General 17
4.1 Command line 17
4.2 Information responses and result codes 18
4.3 ITU-T Recommendation V.250 [14] TE-TA interface commands 18
5 General commands 19
5.0 General 19
5.1 Request manufacturer identification +CGMI 19
5.2 Request model identification +CGMM 20
5.3 Request revision identification +CGMR 20
5.4 Request product serial number identification +CGSN 21
5.5 Select TE character set +CSCS 21
5.6 Request international mobile subscriber identity +CIMI 22
5.7 Multiplexing mode +CMUX 23
5.8 ITU-T Recommendaton V.250 [14] generic TA control commands 25
5.9 PCCA STD-101 [17] select wireless network +WS46 25
5.10 Informative examples 26
6 Call control commands and methods 27
6.0 General 27
6.1 Select type of address +CSTA 27
6.2 ITU-T Recommendation V.250 [14] dial command D 28
6.3 Direct dialling from phonebooks 28
6.4 Call mode +CMOD 30
6.4A Voice call mode +CVMOD 30
6.5 Hangup call +CHUP 31
6.6 Alternating mode call control method 31
6.7 Select bearer service type +CBST 33
6.8 Radio link protocol +CRLP 35
6.9 Service reporting control +CR 36
6.10 Extended error report +CEER 37
6.11 Cellular result codes +CRC 38
6.12 HSCSD device parameters +CHSD 39
6.13 HSCSD transparent call configuration +CHST 40
6.14 HSCSD non-transparent call configuration +CHSN 41
6.15 HSCSD current call parameters +CHSC 41
6.16 HSCSD parameters report +CHSR 42
6.17 HSCSD automatic user initiated upgrading +CHSU 43
6.18 HSCSD non-transparent asymmetry configuration +CHSA 43
6.19 Single numbering scheme +CSNS 44
6.20 Voice hangup control +CVHU 45
6.21 CCITT V.120 [36] rate adaption protocol +CV120 45
6.22 Settings date format +CSDF 46
6.23 Silence command +CSIL 47
6.24 Settings time format +CSTF 48
6.25 ITU-T Recommendation V.250 [14] call control commands 49
6.26 ITU-T Recommendation V.250 [14] data compression commands 49
6.27 Initiate eCall +CECALL 49

6.28 Informative examples 50

7 Network service related commands 51
7.0 General 51
7.1 Subscriber number +CNUM 51
7.2 Network registration +CREG 52
7.3 PLMN selection +COPS 54
7.4 Facility lock +CLCK 56
7.5 Change password +CPWD 58
7.6 Calling line identification presentation +CLIP 58
7.7 Calling line identification restriction +CLIR 60
7.8 Connected line identification presentation +COLP 61
7.9 Called line identification presentation +CDIP 62
7.10 Closed user group +CCUG 63
7.11 Call forwarding number and conditions +CCFC 64
7.12 Call waiting +CCWA 65
7.13 Call related supplementary services +CHLD 67
7.14 Call deflection +CTFR 68
7.15 Unstructured supplementary service data +CUSD 68
7.16 Advice of charge +CAOC 70
7.17 Supplementary service notifications +CSSN 71
7.18 List current calls +CLCC 72
7.19 Preferred PLMN list +CPOL 74
7.20 Selection of preferred PLMN list +CPLS 76
7.21 Read operator names +COPN 76
7.22 eMLPP priority registration and interrogation +CAEMLPP 77
7.23 eMLPP subscriptions +CPPS 77
7.24 Fast call setup conditions +CFCS 78
7.25 Automatic answer for eMLPP service +CAAP 78
7.26 User to user signalling service 1 +CUUS1 79
7.27 Preferred network indication +CPNET 81
7.28 Preferred network status +CPNSTAT 81
7.29 Current packet switched bearer +CPSB 82
7.30 Calling name identification presentation +CNAP 83
7.31 Connected line identification restriction status +COLR 84
7.32 Service specific access control restriction status +CSSAC 85
7.33 Network emergency bearer services support +CNEM 87
7.34 Enhanced closed user group +CECUG 88
7.35 Communication forwarding number and conditions with URI support +CCFCU 90
7.36 Informative examples 92

8 Mobile termination control and status commands 93
8.0 General 93
8.1 Phone activity status +CPAS 94
8.2 Set phone functionality +CFUN 95
8.3 Enter PIN +CPIN 96
8.4 Battery charge +CBC 97
8.5 Signal quality +CSQ 98
8.6 Mobile termination control mode +CMEC 99
8.7 Keypad control +CKPD 100
8.8 Display control +CDIS 101
8.9 Indicator control +CIND 102
8.10 Mobile termination event reporting +CMER 103
8.11 Select phonebook memory storage +CPBS 105
8.12 Read phonebook entries +CPBR 107
8.13 Find phonebook entries +CPBF 108
8.14 Write phonebook entry +CPBW 110
8.15 Clock +CCLK 111
8.16 Alarm +CALA 112
8.17 Generic SIM access +CSIM 113
8.18 Restricted SIM access +CRSM 114
8.19 Secure control command +CSCC 115

8.20 Alert sound mode +CALM ... 116
8.21 Ringer sound level +CRSL ... 116
8.22 Vibrator mode +CVIB ... 117
8.23 Loudspeaker volume level +CLVL ... 117
8.24 Mute control +CMUT ... 118
8.25 Accumulated call meter +CACM ... 119
8.26 Accumulated call meter maximum +CAMM ... 119
8.27 Price per unit and currency table +CPUC ... 120
8.28 Call meter maximum event +CCWE ... 120
8.29 Power class +CPWC ... 121
8.30 Set language +CLAN ... 122
8.31 Language event +CLAE ... 123
8.32 Set greeting text +CSGT ... 123
8.33 Set voice mail number +CSVM ... 124
8.34 Ring melody control +CRMC ... 125
8.35 Ring melody playback +CRMP ... 126
8.36 Master reset +CMAR ... 126
8.37 List all available AT commands +CLAC ... 127
8.38 Delete alarm +CALD ... 127
8.39 Postpone or dismiss an alarm +CAPD ... 128
8.40 Automatic time zone update +CTZU ... 128
8.41 Time zone reporting +CTZR ... 129
8.42 Enter protocol mode+CPROT ... 130
8.43 Generic UICC logical channel access +CGLA ... 131
8.44 Restricted UICC logical channel access +CRLA ... 132
8.45 Open logical channel +CCHO ... 133
8.46 Close logical channel +CCHC ... 134
8.47 EAP authentication +CEAP ... 134
8.48 EAP retrieve parameters +CERP ... 136
8.49 UICC application discovery +CUAD ... 136
8.50 Mobile originated location request +CMOLR ... 137
8.51 Backlight +CBKLT ... 141
8.52 Command touch screen action +CTSA ... 142
8.53 Command screen orientation +CSO ... 144
8.54 Command screen size +CSS ... 146
8.54A Command display screen boundary +CDSB ... 147
8.55 Positioning control +CPOS ... 147
8.56 Positioning reporting +CPOSR ... 163
8.57 Mobile terminated location request notification +CMTLR ... 165
8.58 Mobile terminated location request disclosure allowance +CMTLRA ... 166
8.59 Battery capacity +CBCAP ... 166
8.60 Battery connection status +CBCON ... 167
8.61 Battery charger status +CBCHG ... 168
8.62 Printing IP address format +CGPIAF ... 169
8.63 IMS single radio voice call continuity +CISRVCC ... 170
8.64 IMS network reporting +CIREP ... 171
8.65 Remaining PIN retries +CPINR ... 172
8.66 Set card slot +CSUS ... 173
8.67 Emergency numbers +CEN ... 173
8.68 Availability for voice calls with IMS +CAVIMS ... 174
8.69 Extended signal quality +CESQ ... 175
8.70 Primary notification event reporting +CPNER ... 177
8.71 IMS registration information +CIREG ... 178
8.72 Availability for SMS using IMS +CASIMS ... 179
8.73 Monitor of current calls +CMCCS ... 179
8.74 List of current calls +CLCCS ... 185
8.75 Informative examples ... 188

9 Mobile termination errors ... 192
9.1 Report mobile termination error +CMEE ... 192
9.1a Report mobile originated location request error +CMOLRE ... 192
9.2 Mobile termination error result code +CME ERROR ... 193

9.2.0 General ... 193
9.2.1 General errors ... 193
9.2.2 GPRS and EPS-related errors ... 194
9.2.2.1 Errors related to a failure to perform an attach ... 194
9.2.2.2 Errors related to a failure to activate a context ... 195
9.2.2.3 Errors related to a failure to disconnect a PDN ... 195
9.2.2.4 Other GPRS errors ... 195
9.2.3 VBS, VGCS and eMLPP-related errors ... 195
9.3 Mobile termination error result code +CMOLRE ... 196
9.3.1 General ... 196
9.3.2 Errors ... 196
9.4 Informative examples ... 196

10 Commands for packet domain ... 197
10.0 General ... 197
10.1 Commands specific to MTs supporting the packet domain ... 197
10.1.0 General remark about EPS bearer contexts and PDP contexts ... 197
10.1.1 Define PDP context +CGDCONT ... 199
10.1.2 Define secondary PDP context +CGDSCONT ... 201
10.1.3 Traffic flow template +CGTFT ... 203
10.1.4 Quality of service profile (requested) +CGQREQ ... 205
10.1.5 Quality of service profile (minimum acceptable) +CGQMIN ... 207
10.1.6 3G quality of service profile (requested) +CGEQREQ ... 208
10.1.7 3G quality of service profile (minimum acceptable) +CGEQMIN ... 211
10.1.8 3G quality of service profile (negotiated) +CGEQNEG ... 215
10.1.9 PS attach or detach +CGATT ... 217
10.1.10 PDP context activate or deactivate +CGACT ... 217
10.1.11 PDP context modify +CGCMOD ... 218
10.1.12 Enter data state +CGDATA ... 219
10.1.13 Configure local octet stream PAD parameters +CGCLOSP (Obsolete) ... 221
10.1.14 Show PDP address(es) +CGPADDR ... 221
10.1.15 Automatic response to a network request for PDP context activation +CGAUTO ... 222
10.1.16 Manual response to a network request for PDP context activation +CGANS ... 223
10.1.17 GPRS mobile station class +CGCLASS ... 224
10.1.18 Configure local triple-X PAD parameters +CGCLPAD (GPRS only) (Obsolete) ... 225
10.1.19 Packet domain event reporting +CGEREP ... 225
10.1.20 GPRS network registration status +CGREG ... 229
10.1.21 Select service for MO SMS messages +CGSMS ... 231
10.1.22 EPS network registration status +CEREG ... 231
10.1.23 PDP context read dynamic parameters +CGCONTRDP ... 233
10.1.24 Secondary PDP context read dynamic parameters +CGSCONTRDP ... 235
10.1.25 Traffic flow template read dynamic parameters +CGTFTRDP ... 236
10.1.26 Define EPS quality of service +CGEQOS ... 237
10.1.27 EPS quality of service read dynamic parameters +CGEQOSRDP ... 238
10.1.28 UE modes of operation for EPS +CEMODE ... 239
10.1.29 Delete non-active PDP contexts +CGDEL ... 240
10.1.30 Signalling connection status +CSCON ... 241
10.1.31 Define PDP context authentication parameters +CGAUTH ... 242
10.1.32 Initial PDP context activation +CIPCA ... 243
10.1.33 No more PS data +CNMPSD ... 243
10.1.34 UE's usage setting for EPS +CEUS ... 244
10.1.35 UE's Voice Domain Preference E-UTRAN +CEVDP ... 244
10.1.36 UE's Voice Domain Preference UTRAN +CVDP ... 245
10.1.37 UE's Mobility Management IMS Voice Termination +CMMIVT ... 246
10.1.38 Power Preference Indication for EPS +CEPPI ... 246
10.2 Modem compatibility commands ... 247
10.2.0 General ... 247
10.2.1 MT originated PDP context activation ... 247
10.2.1.0 General ... 247
10.2.1.1 Request packet domain service 'D' ... 247
10.2.1.2 Request packet domain IP service 'D' ... 248
10.2.2 Network requested PDP context activation ... 249

10.2.2.0 General 249
10.2.2.1 Automatic response to a network request for PDP context activation 'S0'....249
10.2.2.2 Manual acceptance of a network request for PDP context activation 'A'....250
10.2.2.3 Manual rejection of a network request for PDP context activation 'H' 250

11 Commands for VGCS and VBS 250
11.0 General....250
11.1 Commands specific to MTs supporting the VGCS and VBS....250
11.1.1 Accept an incoming voice group or voice broadcast call +CAJOIN....250
11.1.2 Reject an incoming voice group or voice broadcast call +CAREJ....251
11.1.3 Leave an ongoing voice group or voice broadcast call +CAHLD 251
11.1.4 Talker access for voice group call +CAPTT 252
11.1.5 Voice group call uplink status presentation +CAULEV 253
11.1.6 List current voice group and voice broadcast calls +CALCC....253
11.1.7 Voice group or voice broadcast call state attribute presentation +CACSP....254
11.1.8 NCH support indication +CANCHEV....255
11.1.9 Originator to dispatcher information +COTDI....256
11.1.10 Short data transmission during ongoing VGCS +CEPTT 257
11.1.11 Group Id prefixes capability +CGIPC....258
11.2 Modem compatibility commands....258
11.2.0 General....258
11.2.1 Request VGCS or VBS service 'D' 258
11.2.2 Termination of an voice group or voice broadcast call 'H' 259
11.3 SIM commands supporting the VGCS and VBS 259
11.3.1 VGCS subscriptions and GId status +CGCS....259
11.3.2 VBS subscriptions and GId status +CBCS....260
11.4 Informative examples....261

12 Commands for USIM application toolkit....261
12.1 General....261
12.2 Commands specific to MTs supporting USAT 262
12.2.1 Read USAT profile +CUSATR....262
12.2.2 Write USAT profile +CUSATW 262
12.2.3 Profile download upon start-up +CUSATD 263
12.2.4 Activate USAT profile +CUSATA....264
12.2.5 Send USAT terminal response +CUSATT....266
12.2.6 Send USAT envelope command +CUSATE....266
12.3 Informative examples....267

13 Commands for enhanced support of dialling....268
13.1 General....268
13.2 Commands for dialling....268
13.2.1 Dial URI +CDU....268
13.2.2 Dial URI from phonebook +CDUP 271
13.2.3 Hangup of current calls +CHCCS 272
13.2.4 Define media profile +CDEFMP....273
13.2.5 Control and modify media description +CCMMD 274
13.3 Informative examples....275

Annex A (normative): Summary of commands from other standards....279

Annex B (normative): Summary of result codes....281

Annex C (informative): Commands from TIA IS-101 283

C.1 Introduction 283

C.2 Commands....284
C.2.1 Select mode +FCLASS 284
C.2.2 Buffer threshold setting +VBT 284
C.2.3 Calling number ID presentation +VCID....285
C.2.4 Receive gain selection +VGR....285
C.2.5 Transmit gain selection +VGT....285
C.2.6 Initialise voice parameters +VIP....286

C.2.7 Inactivity timer +VIT 286
C.2.8 Line selection +VLS 286
C.2.9 Receive data state +VRX 288
C.2.10 Select compression method +VSM 288
C.2.11 DTMF and tone generation +VTS 289
C.2.12 Tone duration +VTD 289
C.2.13 Transmit data state +VTX 290

Annex D (informative): Bibliography 291

Annex E (informative): Mobile originated alternating voice/data call example 292

Annex F (informative): Mobile terminated voice followed by data call example 293

Annex G (informative): Voice call example 294

Annex H (informative): Change history 295

Foreword

This Technical Specification (TS) has been produced by the 3rd Generation Partnership Project (3GPP).

The contents of the present document are subject to continuing work within the TSG and may change following formal TSG approval. Should the TSG modify the contents of the present document, it will be re-released by the TSG with an identifying change of release date and an increase in version number as follows:

Version x.y.z

where:

x the first digit:

1 presented to TSG for information;

2 presented to TSG for approval;

3 or greater indicates TSG approved document under change control.

y the second digit is incremented for all changes of substance, i.e. technical enhancements, corrections, updates, etc.

z the third digit is incremented when editorial only changes have been incorporated in the document.

1 Scope

The present document specifies a profile of AT commands and recommends that this profile be used for controlling Mobile Termination (MT) functions and GSM/UMTS network services from a Terminal Equipment (TE) through Terminal Adaptor (TA). The command prefix `+C` is reserved for Digital Cellular in ITU-T Recommendation V.250 [14]. The present document has also the syntax details used to construct these extended GSM/UMTS commands. Commands from ITU-T Recommendation V.250 [14] and existing digital cellular standards (TIA IS-99 [15] and TIA IS-135 [16]) are used whenever applicable. Some of the new commands are defined such way that they can be easily applied to MT of networks other than GSM/UMTS. ITU-T Recommendation T.31 [11] and ITU-T Recommendation T.32 [12] fax AT commands may be used for GSM/UMTS fax transmission from TE. GSM/UMTS Short Message Service AT commands are defined in 3GPP TS 27.005 [24]. AT commands for GPRS and EPC are defined in clause 10 of this specification. The present document assumes an abstract architecture comprising a TE (e.g. a computer) and a MT interfaced by a TA (see figure 1). The span of control of the defined commands should allow handling of any physical implementation that this abstract architecture may lead to:

- TA, MT and TE as three separate entities;
- TA integrated under the MT cover, and the TE implemented as a separate entity;
- TA integrated under the TE cover, and the MT implemented as a separate entity; and
- TA and MT integrated under the TE cover as a single entity.

The commands described in the present document may be observed on the link between the TE and the TA. However, most of the commands retrieve information about the MT, not about the TA.

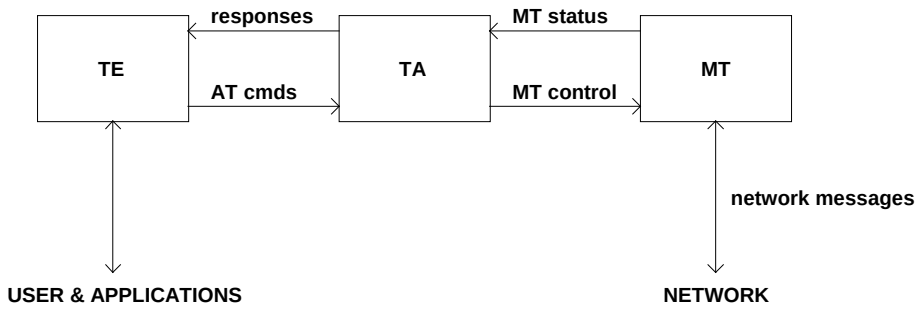

Figure 1: Setup

Interface between TE and TA is intended to operate over existing serial (ITU-T Recommendation V.24) cables, infrared link, and all link types with similar behaviour. For correct operation many of the defined commands require eight bit data and therefore it is recommended that TE-TA link is set to eight bits/ byte mode. (For infrared operation implementation, refer informative references IrDA. For embedding AT commands and data during on-line data state, refer TIA-617/ITU-T V.80.) Interface between TA and MT is dependent on the interface in the MT.

The functional blocks shown in figure 1, using AT commands, shall follow the principles described in the interactions handling framework 3GPP TS 23.227 [63].

2 References

The following documents contain provisions which, through reference in this text, constitute provisions of the present document.

- References are either specific (identified by date of publication, edition number, version number, etc.) or non-specific.
- For a specific reference, subsequent revisions do not apply.
- For a non-specific reference, the latest version applies. In the case of a reference to a 3GPP document (including a GSM document), a non-specific reference implicitly refers to the latest version of that document *in the same Release as the present document*.

[1] 3GPP TS 22.002: "Bearer Services (BS) supported by a GSM Public Land Mobile Network (PLMN)".

[2] 3GPP TS 22.003: "Teleservices supported by a GSM Public Land Mobile Network (PLMN)".

[3] 3GPP TS 22.081: "Line identification supplementary services - Stage 1".

[4] 3GPP TS 22.082: "Call Forwarding (CF) supplementary services - Stage 1".

[5] 3GPP TS 22.083: "Call Waiting (CW) and Call Hold (HOLD) supplementary services - Stage 1".

[6] 3GPP TS 22.088: "Call Barring (CB) supplementary services - Stage 1".

[7] 3GPP TS 23.003: "Numbering, addressing and identification".

[8] 3GPP TS 24.008: "Mobile Radio Interface Layer 3 specification; Core Network Protocols-Stage 3".

[9] GSM MoU SE.13, GSM MoU Permanent Reference Document SE.13: "GSM Mobile Network Codes and Names".

[10] ITU-T Recommendation E.212: "Identification plan for land mobile stations".

[11] ITU-T Recommendation T.31: "Asynchronous facsimile DCE control, service class 1".

[12] ITU-T Recommendation T.32: "Asynchronous facsimile DCE control, service class 2".

[13] ITU-T Recommendation T.50: "International Reference Alphabet (IRA) (Formerly International Alphabet No. 5 or IA5) - Information technology - 7-bit coded character set for information exchange".

[14] ITU-T Recommendation V.250: "Serial asynchronous automatic dialling and control".

[15] TIA IS-99: "Data Services Option Standard for Wideband Spread Spectrum Digital Cellular System".

[16] TIA IS-135: "800 MHz Cellular Systems, TDMA Services, Async Data and Fax".

[17] PCCA STD-101 Data Transmission Systems and Equipment: "Serial Asynchronous Automatic Dialling and Control for Character Mode DCE on Wireless Data Services".

[18] 3GPP TS 24.022: "Radio Link Protocol (RLP) for data and telematic services on the Mobile Station - Base Station System (MS - BSS) interface and the Base Station System - Mobile-services Switching Centre (BSS - MSC) interface".

[19] 3GPP TS 22.030: "Man Machine Interface (MMI) of the Mobile Station (MS)".

[20] 3GPP TS 45.008: "Radio subsystem link control".

[21] 3GPP TS 22.085: "Closed User Group (CUG) supplementary services - Stage 1".

[22] 3GPP TS 22.084: "MultiParty (MPTY) supplementary services - Stage 1".

[23] 3GPP TS 22.090: "Unstructured Supplementary Service Data (USSD) - Stage 1".

[24] 3GPP TS 27.005: "Use of Data Terminal Equipment - Data Circuit terminating Equipment (DTE - DCE) interface for Short Message Service (SMS) and Cell Broadcast Service (CBS)".

[25] 3GPP TS 23.038: "Alphabet and language specific information".

[26] 3GPP TS 22.024: "Description of Charge Advice Information (CAI)".

[27] 3GPP TS 22.086: "Advice of Charge (AoC) supplementary services - Stage 1".

[28] 3GPP TS 51.011: "Specification of the Subscriber Identity Module - Mobile Equipment (SIM-ME) interface".

[29] 3GPP TS 22.034: "High Speed Circuit Switched Data (HSCSD) - Stage 1".

[30] 3GPP TS 22.091: "Explicit Call Transfer (ECT) supplementary service - Stage 1".

[31] 3GPP TS 22.072: "Call Deflection (CD) supplementary service - Stage 1".

[32] ISO/IEC 10646: "Universal Multiple-Octet Coded Character Set (UCS)"; UCS2, 16 bit coding.

[33] 3GPP TS 22.022: "Personalization of GSM Mobile Equipment (ME) Mobile functionality specification".

[34] 3GPP TS 27.060: "General requirements on Mobile Stations (MS) supporting General Packet Radio Bearer Service (GPRS)".

[35] Void.

[36] CCITT Recommendation V.120: "Support by an ISDN of data terminal equipment with V-Series type interfaces with provision for statistical multiplexing".

[37] Void.

[38] 3GPP TS 45.005: "Radio transmission and reception".

[39] 3GPP TS 29.061: "Interworking between the Public Land Mobile Network (PLMN) supporting GPRS and Packet Data Networks (PDN)".

[40] 3GPP TS 23.081: "Line identification supplementary services - Stage 2".

[41] 3GPP TS 27.001: "General on Terminal Adaptation Functions (TAF) for Mobile Stations (MS)".

[42] 3GPP TS 29.007: "General requirements on interworking between the Public Land Mobile Network (PLMN) and the Integrated Services Digital Network (ISDN) or Public Switched Telephone Network (PSTN)".

[43] Infrared Data Association; Specification of Ir Mobile Communications (IrMC).

[44] IrDA Object Exchange Protocol.

[45] 3GPP TS 27.010: "Terminal Equipment to User Equipment (TE-UE) multiplexer protocol User Equipment (UE)".

[46] 3GPP TS 23.107: "Quality of Service, Concept and Architecture".

[47] 3GPP TS 23.060: "General Packet Radio Service (GPRS) Service description; Stage 2".

[48] Void.

[49] 3GPP TS 43.068: "Voice Group Call service (VGCS) - Stage 2".

[50] 3GPP TS 43.069: "Voice Broadcast Service (VBS) - Stage 2".

[51] Void.

[52] 3GPP TS 44.068: "Voice Group Call service (VGCS) - Stage 3".

[53] 3GPP TS 44.069: "Voice Broadcast Service (VBS) - Stage 3".

[54] 3GPP TS 22.067: "enhanced Multi-Level Precedence and Pre-emption service (eMLPP) - Stage 1".

[55] 3GPP TS 42.068: "Voice Group Call service (VGCS) - Stage 1".

[56] 3GPP TS 42.069: "Voice Broadcast Service (VBS) - Stage 1".

[57] Void.

[58] 3GPP TS 22.087: "User-to-User Signalling (UUS) - Stage 1".

[59] 3GPP TS 31.102: "Characteristics of the Universal Subscriber Identity Module (USIM) Application".

[60] ETSI TS 102 221 "Smart Cards; UICC-Terminal interface; Physical and logical characteristics (Release 1999)".

[61] 3GPP TS 44.065: "Mobile Station (MS) – Serving GPRS Support Node (SGSN); Subnetwork Dependent Convergence Protocol (SNDCP)".

[62] 3GPP TS 25.323: "Packet Data Convergence Protocol (PDCP)".

[63] 3GPP TS 23.227 "Applications and User interaction in the UE-Principles and specific requirements".

[64] Void.

[65] 3GPP TS 31.101: "UICC-Terminal Interface; Physical and Logical Characteristics."

[66] ETSI TS 102 310: "Smart Cards; Extensible Authentication Protocol support in the UICC".

[67] Void.

[68] RFC 3748: "Extensible Authentication Protocol (EAP)".

[69] RFC 3629: "UTF-8, a transformation format of ISO 10646".

[70] 3GPP TS 44.318: "Generic Access (GA) to the A/Gb interface; Mobile GA interface layer 3 specification".

[71] 3GPP TS 44.060: "General Packet Radio Service (GPRS); Mobile Station (MS) - Base Station System (BSS) interface; Radio Link Control/Medium Access Control (RLC/MAC) protocol".

[72] 3GPP TS 25.308: "High Speed Downlink Packet Access (HSDPA): Overall Description; Stage 2".

[73] 3GPP TS 25.319: "Enhanced Uplink; Overall Description; Stage 2".

[74] 3GPP TS 25.331: "Radio Resource Control (RRC) protocol specification".

[75] 3GPP TS 24.216: "Communication Continuity Management Object (MO)".

[76] 3GPP TS 23.032: "Universal Geographical Area Description (GAD)".

[77] 3GPP TS 25.305 "User Equipment (UE) positioning in Universal Terrestrial Radio Access Network (UTRAN); Stage 2".

[78] IEC 61162: "Maritime navigation and radio communication equipment and systems – Digital interfaces".

[79] 3GPP TS 44.031: "Location Services (LCS); Mobile Station (MS) - Serving Mobile Location Centre (SMLC), Radio Resource LCS Protocol (RRLP)".

[80] 3GPP TS 49.031: "Base Station System Application Part, LCS Extension (BSSAP-LE)".

[81] Void.

[82] 3GPP TS 23.401: "GPRS enhancements for E-UTRAN access".

[83] 3GPP TS 24.301: "Non-Access-Stratum (NAS) protocol for Evolved Packet System (EPS)".

[84] Void.

[85] 3GPP TS 23.203: "Policy and charging control architecture".

[86] 3GPP TS 36.331: "Evolved Universal Terrestrial Radio Access (E-UTRA); Radio Resource Control (RRC); Protocol specification".

[87] 3GPP TS 24.173: "IMS multimedia telephony communication service and supplementary services; Stage 3".

[88] RFC 4291: "IP Version 6 Addressing Architecture".

[89] 3GPP TS 24.229: "IP multimedia call control protocol based on Session Initiation Protocol (SIP) and Session Description Protocol (SDP)".

[90] 3GPP TS 23.221: "Architectural requirements".

[91] 3GPP TS 24.237: "IP Multimedia Subsystem (IMS) Service Continuity".

[92] 3GPP TS 31.111: "Universal Subscriber Identity Module (USIM) Application Toolkit (USAT)".

[93] 3GPP TS 22.096: "Name identification supplementary services - Stage 1".

[94] 3GPP TS 23.096: "Name identification supplementary services - Stage 2".

[95] 3GPP TS 25.133: "Requirements for support of radio resource management (FDD)".

[96] 3GPP TS 25.123: "Requirements for support of radio resource management (TDD)".

[97] 3GPP TS 36.133: "Evolved Universal Terrestrial Radio Access (E-UTRA); Requirements for support of radio resource management".

[98] 3GPP TS 31.102: "Characteristics of the Universal Subscriber Identity Module (USIM) application".

[99] 3GPP TS 23.040: "Technical realization of the Short Message Service (SMS)".

[100] 3GPP TS 23.041: "Technical realization of Cell Broadcast Service (CBS)".

[101] 3GPP TS 24.341: "Support of SMS over IP networks".

[102] 3GPP TS 24.167: "3GPP IMS Management Object (MO); Stage 3".

[103] IETF STD 5: "Internet Protocol".

[104] IETF STD 51: "The Point-to-Point Protocol (PPP)".

[105] RFC 1144: "Compressing TCP/IP Headers for Low-Speed Serial Links".

[106] RFC 2460: "Internet Protocol, Version 6 (IPv6) Specification".

[107] RFC 2507: "IP Header Compression".

[108] RFC 3095: "RObust Header Compression (ROHC): Framework and four profiles: RTP, UDP, ESP, and uncompressed".

[109] 3GPP TS 24.080: "Mobile radio interface Layer 3 supplementary service specification; Formats and coding".

[110] 3GPP TS 29.002: "Mobile Application Part (MAP) specification".

[111] RFC 3261: "SIP: Session Initiation Protocol".

[112] RFC 3966: "The tel URI for Telephone Numbers".

[113] RFC 3969: "The Internet Assigned Number Authority (IANA) Uniform Resource Identifier (URI) Parameter Registryfor the Session Initiation Protocol (SIP)".

[114] RFC 5341: "The Internet Assigned Number Authority (IANA) tel Uniform Resource Identifier (URI) Parameter Registry".

[115] 3GPP TS 36.355: "Evolved Universal Terrestrial Radio Access (E-UTRA); LTE Positioning Protocol (LPP)".

[116] RFC 2141: "URN Syntax".

[117] RFC 3406: "Uniform Resource Names (URN) Namespace Definition Mechanisms".

[118] RFC 5031: "A Uniform Resource Name (URN) for Emergency and Other Well-Known Services".

[119] 3GPP TS 24.607: "Originating Identification Presentation (OIP) and Originating Identification Restriction (OIR) using IP Multimedia (IM) Core Network (CN) subsystem; Protocol specification".

[120] 3GPP TS 24.608: "Terminating Identification Presentation (TIP) and Terminating Identification Restriction (TIR) using IP Multimedia (IM) Core Network (CN) subsystem; Protocol specification".

[121] 3GPP TS 24.654: "Closed User Group (CUG) using IP Multimedia (IM) Core Network (CN) subsystem, Protocol Specification".

[122] RFC 4715: "The Integrated Services Digital Network (ISDN) Subaddress Encoding Type for tel URI".

[123] 3GPP TS 22.093: "Completion of Calls to Busy Subscriber (CCBS); Service description, Stage 1".

[124] 3GPP TS 22.094: "Follow Me service description; Stage 1".

[125] 3GPP TS 22.097: "Multiple Subscriber Profile (MSP) Phase 2; Service description; Stage 1".

[126] 3GPP TS 22.135: "Multicall; Service description; Stage 1".

[127] 3GPP TS 24.182: "IP Multimedia Subsystem (IMS) Customized Alerting Tones (CAT); Protocol specification".

[128] 3GPP TS 24.183: "IP Multimedia Subsystem (IMS) Customized Ringing Signal (CRS); Protocol specification".

[129] 3GPP TS 24.239: "Flexible Alerting (FA) using IP Multimedia (IM) Core Network (CN) subsystem; Protocol specification".

[130] 3GPP TS 24.259: "Personal Network Management (PNM)".

[131] 3GPP TS 24.390: "Unstructured Supplementary Service Data (USSD) using IP Multimedia (IM) Core Network (CN) subsystem IMS".

[132] 3GPP TS 24.604: "Communication Diversion (CDIV) using IP Multimedia (IM) Core Network (CN) subsystem; Protocol specification".

[133] 3GPP TS 24.605: "Conference (CONF) using IP Multimedia (IM) Core Network (CN) subsystem; Protocol specification".

[134] 3GPP TS 24.606: "Message Waiting Indication (MWI) using IP Multimedia (IM) Core Network (CN) subsystem; Protocol specification".

[135] 3GPP TS 24.610: "Communication HOLD (HOLD) using IP Multimedia (IM) Core Network (CN) subsystem; Protocol specification".

[136] 3GPP TS 24.611: "Anonymous Communication Rejection (ACR) and Communication Barring (CB) using IP Multimedia (IM) Core Network (CN) subsystem; Protocol specification".

[137] 3GPP TS 24.615: "Communication Waiting (CW) using IP Multimedia (IM) Core Network (CN) subsystem; Protocol Specification".

[138] 3GPP TS 24.616: "Malicious Communication Identification (MCID) using IP Multimedia (IM) Core Network (CN) subsystem; Protocol specification".

[139] 3GPP TS 24.629: "Explicit Communication Transfer (ECT) using IP Multimedia (IM) Core Network (CN) subsystem; Protocol specification".

[140] 3GPP TS 24.642: "Completion of Communications to Busy Subscriber (CCBS) and Completion of Communications by No Reply (CCNR) using IP Multimedia (IM) Core Network (CN) subsystem; Protocol specification".

[141] 3GPP TS 24.647: "Advice Of Charge (AOC) using IP Multimedia (IM) Core Network (CN) subsystem".

[142] 3GPP TS 36.509: "Evolved Universal Terrestrial Radio Access (E-UTRA) and Evolved Packet Core (EPC); Special conformance testing functions for User Equipment (UE)".

3 Definitions and abbreviations

3.1 Definitions

For the purposes of the present document, the following syntactical definitions apply (refer also clause 4):

<CR> Carriage return character, which value is specified with command S3.

<LF> Linefeed character, which value is specified with command S4.

<...> Name enclosed in angle brackets is a syntactical element. Brackets themselves do not appear in the command line.

[...] Optional subparameter of a command or an optional part of TA information response is enclosed in square brackets. Brackets themselves do not appear in the command line. When subparameter is not given in *parameter type* commands, new value equals to its previous value. In *action type* commands, action should be done on the basis of the recommended default setting of the subparameter.

underline Underlined defined subparameter value is the recommended default setting of this subparameter. In *parameter type* commands, this value should be used in factory settings which are configured by ITU-T Recommendation V.250 [14] command &F0. In *action type* commands, this value should be used when subparameter is not given.

3.2 Abbreviations

For the purposes of the present document, the following abbreviations apply:

AT	ATtention; this two-character abbreviation is always used to start a command line to be sent from TE to TA
ASCI	Advanced Speech Call Items, including VGCS, VBS and eMLPP
BCD	Binary Coded Decimal
eMLPP	Enhanced Multi-Level Precedence and Pre-emption Service
ETSI	European Telecommunications Standards Institute
FTM	Frame Tunnelling Mode (refer 3GPP TS 27.001 [41] and 3GPP TS 29.007 [42])
HSCSD	High Speed Circuit Switched Data
IMEI	International Mobile station Equipment Identity
IRA	International Reference Alphabet (ITU-T Recommendation T.50 [13])
IrDA	Infrared Data Association
ISO	International Standards Organization
ITU-T	International Telecommunication Union - Telecommunications Standardization Sector
ME	Mobile Equipment
MoU	Memorandum of Understanding (GSM operator joint)
MT	Mobile Termination
PCCA	Portable Computer and Communications Association
PTT	Push to Talk
RDI	Restricted Digital Information
RLP	Radio Link Protocol
SIM	Subscriber Identity Module
TA	Terminal Adaptor, e.g. a GSM data card (equal to DCE; Data Circuit terminating Equipment)
TE	Terminal Equipment, e.g. a computer (equal to DTE; Data Terminal Equipment)
TIA	Telecommunications Industry Association
UDI	Unrestricted Digital Information
UE	User Equipment
UICC	Universal Integrated Circuit Card
USAT	USIM Application Toolkit
USIM	Universal Subscriber Identity Module
VBS	Voice Broadcast Service

VGCS Voice Group Call Service

4 AT command syntax

4.0 General

This clause summarizes general aspects on AT commands and issues related to them.

TE software implementors must take account that future versions of this specification may include additional parameters beyond what is expected in any response to an AT Set Command, Read Command, Test Command, or unsolicited result code. Implementations must therefore analyse all parameters provided from the TA and discard (ignore) any parameters received following the parameters expected by the TE software.

For further information refer ITU-T Recommendation V.250 [14].

In the tables for the commands syntaxes, the possible response(s) are outlined as follows:

- the responses from ITU-T Recommendation V.250 [14] (like *OK* and *ERROR*) are normally not shown; and
- the final response *+CME ERROR* is shown when a final result code in subclause 9.2 can be provided.

In certain implementations, AT commands are used as an internal interface within the physical handset, e.g. between the application and the radio interface layer 3 stack implemented on different processors. Certain AT commands transfer information in the clear that can be regarded as sensitive with regards to security or privacy. Care must be exercised in AT commands that:

- transfer passwords (e.g. +CLCK, +CPWD or +CPBS);
- transfer identities (e.g. IMSI) or details of a call (e.g. +COLP);
- transfer the current location of the phone (e.g. +CMOLR);
- reveal the IMEI (e.g. +CGSN);
- allow the TE to take unintentionally control over the SIM-MT interface (e.g. +CSIM);
- enable/disable access to commands protected by security mechanism (e.g. +CSCC); or
- exchange security related parameters and keys with the UICC (e.g. +CEAP and +CERP).

The above mentioned AT commands and parameters are examples to illustrate the concerns and is not meant to be a comprehensive list.

4.1 Command line

See figure 2 for general structure of a command line. Standardized *basic* commands are found only in ITU-T Recommendation V.250 [14]. GSM/UMTS commands use syntax rules of *extended* commands. Every extended command has a *test command* (trailing =?) to test the existence of the command and to give information about the type of its subparameters. *Parameter type* commands also have a *read command* (trailing ?) to check the current values of subparameters. *Action type* commands do not store the values of any of their possible subparameters, and therefore do not have a read command.

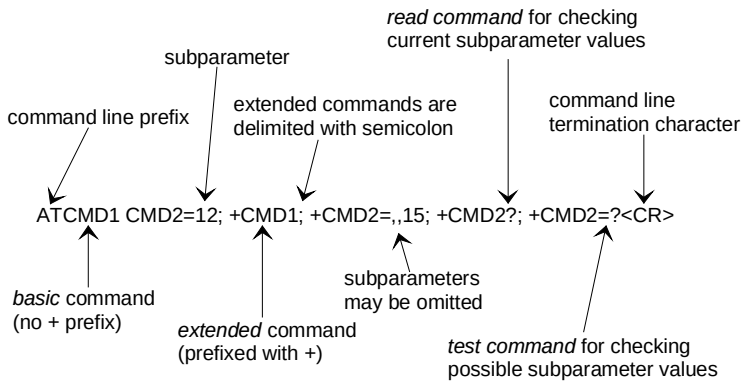

Figure 2: Basic structure of a command line

If verbose responses are enabled with command `V1` and all commands in a command line has been performed successfully, result code `<CR><LF>OK<CR><LF>` is sent from the TA to the TE. If numeric responses are enabled with command `V0`, result code `0<CR>` is sent instead.

If verbose responses are enabled with command `V1` and subparameter values of a command are not accepted by the TA (or command itself is invalid, or command cannot be performed for some reason), result code `<CR><LF>ERROR<CR><LF>` is sent to the TE and no subsequent commands in the command line are processed. If numeric responses are enabled with command `V0`, result code `4<CR>` is sent instead. `ERROR` (or `4`) response may be replaced by `+CME ERROR: <err>` (refer clause 9) when command was not processed due to an error related to MT operation.

4.2 Information responses and result codes

The TA response for the example command line of figure 2 could be as shown in figure 3. Here, verbose response format is enabled with command `V1`. If numeric format `V0` would have been used, `<CR><LF>` headers of *information response*s would have been left out and *final result code* changed to `0<CR>`.

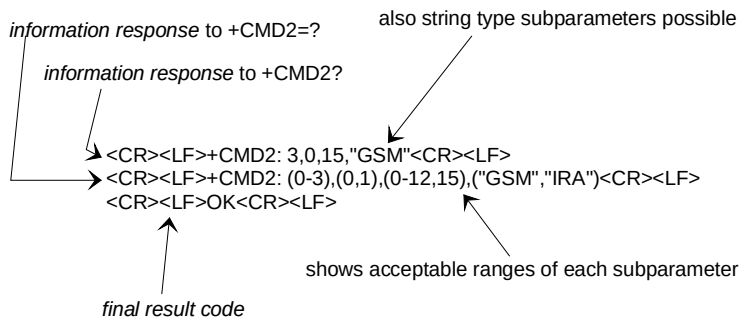

Figure 3: Response to a command line

So called *intermediate result code*s inform about progress of TA operation (e.g. connection establishment `CONNECT`), and so called *unsolicited result code*s indicate occurrence of an event not directly associated with issuance of a command from TE (e.g. ring indication `RING`).

4.3 ITU-T Recommendation V.250 [14] TE-TA interface commands

Table 1 summarizes ITU-T Recommendation V.250 [14] commands relating to command line and response formatting, and TA-TE interface operation. All are applicable to GSM/UMTS terminals.

Table 1: V.250 commands relating to TE-TA interface

Command	Subclause	Impl.	Use in GSM/UMTS
S3=[<value>]	6.2.1	mand.	command line termination character (mandatory default setting IRA 13)
S4=[<value>]	6.2.2	mand.	response formatting character (recommended default IRA 10)
S5=[<value>]	6.2.3	mand.	command line editing character (recommended default IRA 8)
E[<value>]	6.2.4	mand.	command echo (recommended default 1 i.e. TA echoes commands back)
Q[<value>]	6.2.5	mand.	result code suppression (recommended default 0 i.e. TA transmits result codes)
V[<value>]	6.2.6	mand.	TA response format (recommended default 1 i.e. verbose format)
X[<value>]	6.2.7	mand.	defines CONNECT result code format; values manufacturer specific
&C[<value>]	6.2.8	mand.	determines how ITU-T V.24 circuit 109 (or equivalent) relates to the detection of received line signal from remote end (recommended default 1 i.e. 109 operation relates to detection of received signal)
&D[<value>]	6.2.9	mand.	determines how TA responds when ITU-T V.24 circuit 108/2 (or equivalent) is changed from ON to OFF condition during online data state
+IPR=[<value>]	6.2.10	opt.	fixed TE data rate (recommended default 0 i.e. automatic detection)
+ICF=[<format>[,<parity>]]	6.2.11	opt.	TE-TA character framing (recommended default 3,3 i.e. eight data bits, no parity, 1 stop bit)
+IFC=[<by_te> [,<by_ta>]]	6.2.12	opt.	TE-TA local flow control (recommended default 2,2 i.e. TE uses ITU-T V.24 circuit 133 (or equivalent), and TA circuit 106 (or equivalent))
+ILRR=[<value>]	6.2.13	opt.	determines whether the used local TE-TA data rate is informed using intermediate result code +ILRR: <rate> before going online data state after call answering or originating

5 General commands

5.0 General

ITU-T Recommendation V.250 [14] includes "Generic DCE Control" commands with the prefix +G. These commands are for the identification of the TA. Four of those commands are adapted here to be the identification commands of the MT. Syntax is otherwise similar but the prefix is +CG. TIA IS-99 [15] uses same commands for base station identification.

5.1 Request manufacturer identification +CGMI

Table 2: +CGMI action command syntax

Command	Possible response(s)
+CGMI	<manufacturer> *+CME ERROR: <err>*
+CGMI=?	

Description

Execution command causes the TA to return one or more lines of information text <manufacturer>, determined by the MT manufacturer, which is intended to permit the user of the TA to identify the manufacturer of the MT to which it is connected to. Typically, the text will consist of a single line containing the name of the manufacturer, but manufacturers may choose to provide more information if desired. Refer subclause 9.2 for possible <err> values.

Defined values

<manufacturer>: the total number of characters, including line terminators, in the information text shall not exceed 2048 characters.

Text shall not contain the sequence 0<CR> or OK<CR>

Implementation

Optional.

5.2 Request model identification +CGMM

Table 3: +CGMM action command syntax

Command	Possible response(s)
+CGMM	<model> *+CME ERROR: <err>*
+CGMM=?	

Description

Execution command causes the TA to return one or more lines of information text <model>, determined by the MT manufacturer, which is intended to permit the user of the TA to identify the specific model of the MT to which it is connected to. Typically, the text will consist of a single line containing the name of the product, but manufacturers may choose to provide more information if desired. Refer subclause 9.2 for possible <err> values.

Defined values

<model>: the total number of characters, including line terminators, in the information text shall not exceed 2048 characters.

Text shall not contain the sequence 0<CR> or OK<CR>

Implementation

Optional.

5.3 Request revision identification +CGMR

Table 4: +CGMR action command syntax

Command	Possible response(s)
+CGMR	<revision> *+CME ERROR: <err>*
+CGMR=?	

Description

Execution command causes the TA to return one or more lines of information text <revision>, determined by the MT manufacturer, which is intended to permit the user of the TA to identify the version, revision level or date, or other pertinent information of the MT to which it is connected to. Typically, the text will consist of a single line containing the version of the product, but manufacturers may choose to provide more information if desired. Refer subclause 9.2 for possible <err> values.

Defined values

<revision>: the total number of characters, including line terminators, in the information text shall not exceed 2048 characters.

Text shall not contain the sequence 0<CR> or OK<CR>

Implementation

Optional.

5.4 Request product serial number identification +CGSN

Table 5: +CGSN action command syntax

Command	Possible response(s)
+CGSN	<sn> *+CME ERROR: <err>*
+CGSN=?	

Description

Execution command causes the TA to return one or more lines of information text <sn>, determined by the MT manufacturer, which is intended to permit the user of the TA to identify the individual MT to which it is connected to. Typically, the text will consist of a single line containing the IMEI (International Mobile station Equipment Identity; refer 3GPP TS 23.003 [7]) number of the MT, but manufacturers may choose to provide more information if desired. Refer subclause 9.2 for possible <err> values.

Defined values

<sn>: the total number of characters, including line terminators, in the information text shall not exceed 2048 characters.

Text shall not contain the sequence 0<CR> or OK<CR>

Implementation

Optional.

5.5 Select TE character set +CSCS

Table 6: +CSCS parameter command syntax

Command	Possible response(s)
+CSCS=[<chset>]	
+CSCS?	+CSCS: <chset>
+CSCS=?	+CSCS: (list of supported <chset>s)

Description

Set command informs TA which character set <chset> is used by the TE. TA is then able to convert character strings correctly between TE and MT character sets.

When TA-TE interface is set to 8-bit operation and used TE alphabet is 7-bit, the highest bit shall be set to zero.

NOTE: It is manufacturer specific how the internal alphabet of MT is converted to/from the TE alphabet.

Read command shows current setting and test command displays conversion schemes implemented in the TA.

Defined values

<chset>: character set as a string type (conversion schemes not listed here can be defined by manufacturers)

"GSM" GSM 7 bit default alphabet (3GPP TS 23.038 [25]); this setting causes easily software flow control (XON/XOFF) problems.

"HEX" Character strings consist only of hexadecimal numbers from 00 to FF; e.g. "032FE6" equals three 8-bit characters with decimal values 3, 47 and 230; no conversions to the original MT character set shall be done.

If MT is using GSM 7 bit default alphabet, its characters shall be padded with 8th bit (zero) before converting them to hexadecimal numbers (i.e. no SMS-style packing of 7-bit alphabet).

"IRA" International reference alphabet (see ITU-T Recommendation T.50 [13]).

"PCCP*xxx*" PC character set Code Page *xxx*

"PCDN" PC Danish/Norwegian character set

"UCS2" 16-bit universal multiple-octet coded character set (see ISO/IEC10646 [32]); UCS2 character strings are converted to hexadecimal numbers from 0000 to FFFF; e.g. "004100620063" equals three 16-bit characters with decimal values 65, 98 and 99.

"UTF-8" Octet (8-bit) lossless encoding of UCS characters (see RFC 3629 [69]); UTF-8 encodes each UCS character as a variable number of octets, where the number of octets depends on the integer value assigned to the UCS character. The input format shall be a stream of octets. It shall not be converted to hexadecimal numbers as in "HEX" or "UCS2". This character set requires an 8-bit TA – TE interface.

"8859-*n*" ISO 8859 Latin *n* (1-6) character set

"8859-C" ISO 8859 Latin/Cyrillic character set

"8859-A" ISO 8859 Latin/Arabic character set

"8859-G" ISO 8859 Latin/Greek character set

"8859-H" ISO 8859 Latin/Hebrew character set

Implementation

Mandatory when a command using the setting of this command is implemented.

5.6 Request international mobile subscriber identity +CIMI

Table 7: +CIMI action command syntax

Command	Possible response(s)
+CIMI	<IMSI> *+CME ERROR: <err>*
+CIMI=?	

Description

Execution command causes the TA to return <IMSI>, which is intended to permit the TE to identify the individual SIM card or active application in the UICC (GSM or USIM) which is attached to MT. Refer subclause 9.2 for possible <err> values.

Defined values

<IMSI>: International Mobile Subscriber Identity (string without double quotes)

Implementation

Optional.

5.7 Multiplexing mode +CMUX

Table 8: +CMUX parameter command syntax

Command	Possible response(s)
+CMUX=<transparency>[,<subset>[,<port_speed>[,<N1>[,<T1>[,<N2>[,<T2>[,<T3>[,<k>]]]]]]]]	*+CME ERROR: <err>*
+CMUX?	+CMUX: <transparency>,[<subset>],<port_speed>,<N1>,<T1>,<N2>,<T2>,<T3>[,<k>] *+CME ERROR: <err>*
+CMUX=?	+CMUX: (list of supported <transparency>s),(list of supported <subset>s),(list of supported <port_speed>s),(list of supported <N1>s),(list of supported <T1>s),(list of supported <N2>s),(list of supported <T2>s),(list of supported <T3>s),(list of supported <k>s)

Description

This command is used to enable/disable the 3GPP TS 27.010 [45] multiplexing protocol control channel. Refer subclause 9.2 for possible <err> values. The AT command sets parameters for the Control Channel. If the parameters are left out, the default value is used.

Read command returns the current settings.

Test command returns the supported parameters.

It is recommended that the MT/TA/TE should autobaud to the +CMUX command up to and including an interface speed of 9600 bits/s.

The OK or +CME ERROR: <err> response is returned at the speed of the +CMUX command prior to entering <transparency>.

It is recommended that whenever the multiplexer control channel is released the MT/TA/TE should assume an interface rate of up to and including 9600 bits/s for auto bauding purposes irrespective of any previous higher speed having been selected.

If a +CMUX command is issued whilst in any multiplexer mode then that +CMUX command shall be ignored and the MT/TA shall return a +CME ERROR: <err> response.

Defined values

<transparency>: integer type (multiplexer Transparency Mechanism)

0 Basic option

1 Advanced option

<subset>: integer type. This parameter defines the way in which the multiplexer **control channel** is set up. A virtual channel may subsequently be set up differently but in the absence of any negotiation for the settings of a virtual channel, the virtual channel shall be set up according to the control channel <subset> setting.

0 UIH frames used only

1 UI frames used only

2 I frames used only

<port_speed> integer type (transmission rate)

1 9 600 bit/s

2 19 200 bit/s

3 38 400 bit/s

4 57 600 bit/s

5 115 200 bit/s

6 230 400 bits/s

<N1>: integer type (maximum frame size)

1- 32768, where the 31 is default for Basic option and 64 is default for Advanced option (see <transparency>)

<T1>: integer type (acknowledgement timer in units of ten milliseconds)

1-255, where 10 is default (100 ms)

<N2>: integer type (maximum number of re-transmissions)

0-100, where 3 is default

<T2>: integer type (response timer for the multiplexer control channel in units of ten milliseconds)

2-255, where 30 is default (300 ms)

NOTE: T2 must be longer than T1.

<T3>: integer type (wake up response timer in seconds)

1-255, where 10 is default

<k>: integer type (window size, for Advanced option with Error-Recovery Mode)

1-7, where 2 is default

Implementation

Mandatory, if 3GPP TS 27.010 [45] supported in the MT/TA.

5.8 ITU-T Recommendaton V.250 [14] generic TA control commands

Table 9: V.250 generic TA control commands

Command	Subclause	Impl.	Use in GSM/UMTS
Z[<value>]	6.1.1	mand.	TA sets all parameters to their defaults as specified by a user memory profile or by the manufacturer, and resets TA
&F[<value>]	6.1.2	mand.	TA sets all parameters to their defaults as specified by the manufacturer
I[<value>]	6.1.3	opt.	request manufacturer specific information about the TA (software cannot use this command to determine the capabilities of a TA)
+GMI	6.1.4	mand.	request TA manufacturer identification (may equal to +CGMI)
+GMM	6.1.5	mand.	request TA model identification (may equal to +CGMM)
+GMR	6.1.6	mand.	request TA revision identification (may equal to +CGMR)
+GSN	6.1.7	opt.	request TA serial number identification (may equal to +CGSN)
+GOI	6.1.8	opt.	request ISO system global object identification of the TA (general format defined in ITU-T Recommendation X.208; encoding rules in ITU-T Recommendation X.209)
+GCAP	6.1.9	mand.	request overall capabilities of TA; the response code for a TA building on this document shall be +CGSM
+GCI=<T.35>	6.1.10	opt.	selects the country of installation for the TA using ITU-T Recommendation T.35 Annex A country codes

5.9 PCCA STD-101 [17] select wireless network +WS46

PCCA STD-101 [17] includes a command to select the cellular network (Wireless Data Service; WDS) to operate with the TA. PCCA calls this WDS-Side Stack Selection. This command may be used when TA is asked to indicate the networks in which it can operate.

Table 10: +WS46 parameter command syntax

Command	Possible response(s)
+WS46=[<n>]	
+WS46?	<n>
+WS46=?	(list of supported <n>s)

Description

Set command selects the WDS side stack <n> to be used by the TA. Read command shows current setting and test command displays side stacks implemented in the TA.

Defined values for Query

<n>: integer type

12 GSM Digital Cellular Systems (GERAN only)

22 UTRAN only

25 3GPP Systems (GERAN, UTRAN and E-UTRAN)

28 E-UTRAN only

29 GERAN and UTRAN

30 GERAN and E-UTRAN

31 UTRAN and E-UTRAN

The values in <n> for Query are mutually exclusive. If one value (e.g. "25") is returned, other values shall not be returned.

Defined values for Set

<n>: integer type

12 3GPP System

22 Not used. If received, the value shall be treated as if 12 had been received or an ERROR shall be returned.

25 Not used. If received, the value shall be treated as if 12 had been received or an ERROR shall be returned.

28 Not used. If received, the value shall be treated as if 12 had been received or an ERROR shall be returned.

29 Not used. If received, the value shall be treated as if 12 had been received or an ERROR shall be returned.

30 Not used. If received, the value shall be treated as if 12 had been received or an ERROR shall be returned.

31 Not used. If received, the value shall be treated as if 12 had been received or an ERROR shall be returned.

refer PCCA STD-101 [17] for other values.

Implementation

Mandatory in PCCA STD-101 [17], but optional for GSM/UMTS/EPS.

5.10 Informative examples

When beginning to build a communication link, a general TE application controlling a TA needs to determine the TA and the MT to which it is connected. ITU-T Recommendation V.250 [14] has seven commands for TA identification from which four are mandatory to be implemented in a TA. An example of this command sequence requesting manufacturer (`+GMI`), model (`+GMM`), revision (`+GMR`) and serial number (`+GSN`) information would be:

```
AT+GMI
Manufacturer ABC
OK
AT+GMM
GSM Ultimate Data Device
OK
AT+GMR
1.00
OK
AT+GSN
987612345-123
OK
```

The maximum lengths of the information responses are defined to be 2048 characters, but it is recommended that they are kept as simple as in the example. The serial number command is defined as optional. Another optional command is Global Object Identification command (`+GOI`) which should return the object identifiers of ITU-T Recommendation X.208 as numeric strings delimited by periods. The Complete Capabilities List command (`+GCAP`) should indicate the major capability areas of the TA. The support of different areas is presented in the response of `+GCAP` command. Each area may be presented by the selection command name of a specific capability area (e.g. `+FCLASS` for fax support) or some other predefined response. For instance, a GSM TA with fax capabilities could respond as follows:

```
AT+GCAP
+GCAP: +CGSM,+FCLASS,+W
OK
```

The first supported area in the response is presented with `+CGSM`. It is the response text to show that some or all GSM commands of the present document are supported. Second response text (`+FCLASS`) informs that some fax or voice capabilities are present, and the third text (`+W`) about the presence of wireless commands as specified by PCCA STD-101 [17]. Command `+FCLASS=?` (refer e.g. ITU-T Recommendation T.31 [11] and

ITU-T Recommendation T.32 [12]) should be used to query the supported fax capabilities and `+WS46=?` to query the wireless data services available:

```
AT+FCLASS=?;+WS46=?
0,1,2,2.0
(12)
OK
```

The TA of this example supports GSM data services, and fax service class 1 (TIA-578-A), 2 (manufacturer specific) and 2.0 (ITU-T Recommendation T.32 [12] / TIA-592).

The present document defines commands for MT identification which are similar to those for TA identification in ITU-T Recommendation V.250 [14], for an example:

```
AT+CGMI
Mobile Manufacturer XYZ
OK
AT+CGMM
GSM Phone 1234
OK
AT+CGMR
1.00
OK
AT+CGSN
123456121234561
OK
```

Manufacturer, model and version commands work similarly as for TA, except that the serial number query returns the International Mobile Station Equipment Identity (IMEI) number. IMEI is fifteen digits long and consists of a type approval code, a final assembly code, a serial number and a spare digit (refer 3GPP TS 23.003 [7]). When the TA is implemented inside MT, the responses for both TA and MT queries will most likely follow the responses of MT identification.

6 Call control commands and methods

6.0 General

This clause describes the control of calls. Normal data and fax call control is done as in ITU-T Recommendation V.250 [14], ITU-T Recommendation T.31 [11] and ITU-T Recommendation T.32 [12]. For voice call originating, refer subclause "ITU-T Recommendation V.250 dial command `D`" and clause "Commands for enhanced support of dialling".

6.1 Select type of address +CSTA

Table 11: +CSTA parameter command syntax

Command	Possible response(s)
`+CSTA=[<type>]`	
`+CSTA?`	`+CSTA: <type>`
`+CSTA=?`	`+CSTA: (`list of supported `<type>`s`)`

Description

Set command selects the type of number for further dialling commands (`D`) according to GSM/UMTS specifications. Test command returns values supported a compound value.

Defined values

`<type>`: type of address octet in integer format (refer 3GPP TS 24.008 [8] subclause 10.5.4.7); default 145 when dialling string includes international access code character "+", otherwise 129

Implementation

Mandatory when other than default value allowed.

6.2 ITU-T Recommendation V.250 [14] dial command D

ITU-T Recommendation V.250 [14] dial command D lists characters that may be used in a dialling string for making a call or controlling supplementary services in accordance with 3GPP TS 22.030 [19]. Their use in GSM/UMTS is listed in this subclause, as well as new dial modifiers applicable only to GSM/UMTS are introduced. For a MT supporting AT commands only, it is mandatory to support the control of supplementary services in accordance with 3GPP TS 22.030 [19] through the dial command or through the specific supplementary service commands (+CCFC, +CLCK, etc.), where 3GPP TS 22.030 [19] identifies the supplementary services as mandatory.

V.250 dialling digits

1 2 3 4 5 6 7 8 9 0 * # + A B C (implementation of these characters is mandatory for GSM/UMTS)

D (implementation of this character is optional for GSM/UMTS, and it is ignored)

V.250 modifier characters

, (implementation of this character is mandatory for GSM/UMTS, but it may be ignored)

T P (implementation of these characters is mandatory for GSM/UMTS, but they are ignored)

! W @ (implementation of these characters is optional for GSM/UMTS, and they are ignored)

V.250 semicolon character

In GSM/UMTS, when semicolon character is given after dialling digits (or modifiers), a voice call originated to the given address. TA returns to command state immediately (or after possible +COLP result code; refer subclause "Connected line identification presentation +COLP"). Refer Annex G for a detailed example.

GSM/UMTS modifier characters

> (refer subclause "Direct dialling from phonebooks")

I or i (override the CLIR supplementary service subscription default value for this call; I = invocation (restrict CLI presentation) and i = suppression (allow CLI presentation); refer subclause "Calling line identification restriction +CLIR")

G or g (control the CUG supplementary service information for this call; uses index and info values set with command +CCUG or +CECUG; refer subclause "Closed user group +CCUG" and subclause "Enhanced closed user group +CECUG")

6.3 Direct dialling from phonebooks

GSM/UMTS MT and SIM/UICC can contain phonebooks which have a phone number and an alphanumeric field for each phonebook entry location. The use of ITU-T Recommendation V.250 [14] dialling command ensures that direct dialling from MT and SIM/UICC phonebook is possible through ordinary communications software which just gives the phone number field to be filled and then use the D command to originate the call. Available memories may be queried with Select Phonebook Storage test command +CPBS=?, and location range for example with Read Phonebook Entries test command +CPBR=?.

Execute commands

1. D><str>[I][G][;] originate call to phone number which corresponding alphanumeric field is <str> (if possible, all available memories should be searched for the correct entry).

2. D>*mem*<n>[I][G][;] originate call to phone number in memory *mem* entry location <n> (available memories may be queried with Select Phonebook Storage test command +CPBS=?; *mem* could be e.g. ME).

3. D><n>[I][G][;] originate call to phone number in entry location <n> (it is manufacturer specific which memory storage of MT, SIM/UICC in the currently selected card slot and TA is used; command Select Phonebook Memory Storage +CPBS setting is recommended to be used).

Semicolon character shall be added when voice call is originated. CLIR and CUG per call base modifiers may also be present.

Responses

Possible error responses include +CME ERROR: <err> when error is related to MT functionality. Refer subclause 9.2 for possible error values. Otherwise TA responses can have values defined by ITU-T Recommendation V.250 [14] and commands Service Reporting Control +CR and Connected Line Identification Presentation +COLP. Detailed error report of an unsuccessful originated call failed in a GSM/UMTS network error can be obtained with command Extended Error Report +CEER (if implemented).

Defined values

<str>: string type value, which should equal to an alphanumeric field in at least one phonebook entry in the searched memories; used character set should be the one selected with Select TE Character Set +CSCS

<n>: integer type memory location should be in the range of locations available in the memory used

Implementation

Mandatory when direct dialling is implemented. Also phonebook commands implementation is required.

6.4 Call mode +CMOD

Table 12: +CMOD parameter command syntax

Command	Possible response(s)
+CMOD=[<mode>]	
+CMOD?	+CMOD: <mode>
+CMOD=?	+CMOD: (list of supported <mode>s)

Description

Set command selects the call mode of further dialling commands (D) or for next answering command (A). Mode can be either single or alternating (in the present document, terms "alternating mode" and "alternating call" refer to all GSM/UMTS bearer and teleservices that incorporate more than one basic service (voice, data, fax) within one call). When single mode is selected the call originating and hangup procedures are similar to procedures specified in ITU-T Recommendations V.250 [14], T.31 [11] and T.32 [12]. In GSM/UMTS there can be voice followed by data (refer 3GPP TS 22.002 [1]), alternating voice/data (refer 3GPP TS 22.002 [1]) and alternating voice/fax calls (refer 3GPP TS 22.003 [2]). Refer next two subclauses for alternating call control methods.

Test command returns values supported as a compound value.

NOTE: +CMOD shall be set to zero after a successfully completed alternating mode call. It shall be set to zero also after a failed answering. The power-up, factory (&F) and user resets (Z) shall also set the value to zero. This reduces the possibility that alternating mode calls are originated or answered accidentally.

Defined values

<mode>: integer type

0 single mode

1 alternating voice/fax (teleservice 61)

2 alternating voice/data (bearer service 61)

3 voice followed by data (bearer service 81)

all other values below 128 are reserved by the present document

Implementation

Mandatory when alternating mode calls are implemented in the TA.

6.4A Voice call mode +CVMOD

Table 13: +CVMOD parameter command syntax

Command	Possible response(s)
+CVMOD=[<voice_mode>]	
+CVMOD?	+CVMOD: <voice_mode>
+CVMOD=?	+CVMOD: (list of supported <voice_mode>s)

Description

Set command selects the voice call mode for making a Mobile Originated voice call from the UE. The voice call mode can be CS_ONLY, VOIP_ONLY, CS_PREFERRED or VOIP_PREFERRED. Type of VoIP session preferred (e.g. SIP VoIP, IMS VoIP) is manufacturer specific issue.

NOTE 1: If the Call Mode is set to CS_ONLY, then the ATD command will make a call in CS mode.

If the Call Mode is set to VOIP_ONLY, then the ATD command will make a call in VoIP mode.

If the Call Mode is set to CS_PREFERRED, then the ATD command gives preference for CS based voice call.

If the Call Mode is set to VOIP_PREFERRED, then the ATD command gives preference for VoIP based voice call

NOTE 2: The preferences are not applicable for the emergency call.

NOTE 3: The preferences are not applicable if operator has set preferences for UE originated calls/sessions, 3GPP TS 24.216 [75] subclause 5.6.

Read command returns the current value of `<voice_mode>`.

Test command returns the values supported by the UE.

Defined values

`<voice_mode>`: integer type

0 CS_ONLY

1 VOIP_ONLY

2 CS_PREFERRED

3 VOIP_PREFERRED

Implementation

Optional.

6.5 Hangup call +CHUP

Table 13a: +CHUP action command syntax

Command	Possible response(s)
+CHUP	
+CHUP=?	

Description

Execution command causes the TA to hangup the current GSM/UMTS call of the MT.

NOTE: The purpose of this command is not to replace the ITU-T Recommendation V.250 [14] command H, but to give an assured procedure to terminate an alternating mode call. Refer next subclause.

Implementation

Mandatory when alternating mode calls implemented in the TA.

6.6 Alternating mode call control method

This subclause describes the procedure to handle alternating mode calls with AT commands. Procedures are mandatory when alternating mode calls are implemented in the TA.

NOTE 1: ATH and drop DTR will not necessarily cause a hangup from voice mode. If the +CVHU is implemented the behaviour shall be controlled by its setting.

Voice followed by data call (bearer service 81)

Figure 4 shows commands to start the call, to switch from voice to data (In-Call Modification) and to hang up the call. `+CMOD` and `+FCLASS` commands indicate the current settings before dialling or answering command, not that they shall be given just before `D` or `A` command. Refer subclause "Cellular result codes +CRC" for possible `+CRING` result code values. Refer Annex F for a detailed example.

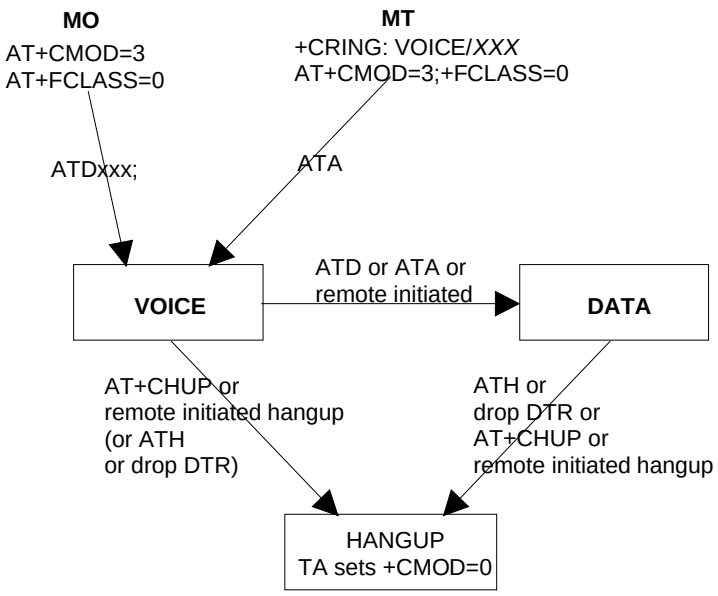

Figure 4: Voice followed by data call

Voice/ data call (bearer service number 61)

Figure 5 shows the commands to start the call, to switch between modes (In-Call Modification) and to hang up the call. `+CMOD` and `+FCLASS` commands indicate the current settings before dialling or answering command, not that they shall be given just before `D` or `A` command. Refer subclause "Cellular result codes +CRC" for possible `+CRING` result code values. Refer Annex E for a detailed example.

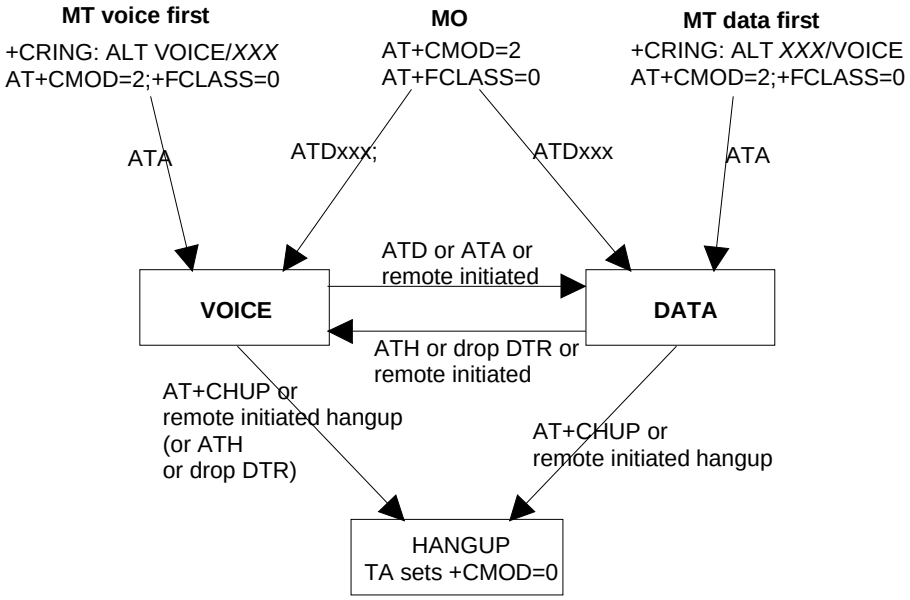

Figure 5: Alternating voice and data call

Voice/ fax call (teleservice number 61)

Figure 6 shows the commands to start the call, to switch between modes (In-Call Modification) and to hang up the call. `+CMOD` and `+FCLASS` commands indicate the current settings before dialling or answering command, not that they shall be given just before `D` or `A` command. The parameter "x" of `+FCLASS` command can be 1, 1.0, 2 or 2.0.

NOTE 2: The transition from fax mode to voice mode is for further study.

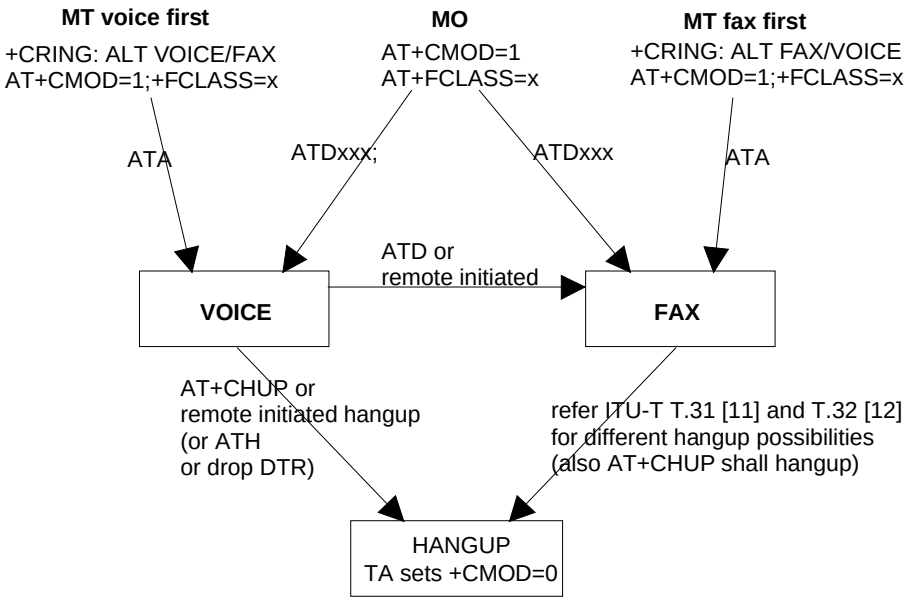

Figure 6: Alternating voice and fax call

6.7 Select bearer service type +CBST

Table 14: +CBST parameter command syntax

Command	Possible response(s)
`+CBST=[<speed>[,<name>[,<ce>]]]`	
`+CBST?`	`+CBST: <speed>,<name>,<ce>`
`+CBST=?`	`+CBST: (`list of supported `<speed>`s`),(`list of supported `<name>`s`),(`list of supported `<ce>`s`)`

Description

Set command selects the bearer service `<name>` with data rate `<speed>`, and the connection element `<ce>` to be used when data calls are originated (refer 3GPP TS 22.002 [1]). Values may also be used during mobile terminated data call setup, especially in case of single numbering scheme calls (refer `+CSNS`).

Test command returns values supported as compound values.

Defined values

NOTE: The default values of the subparameters are manufacturer specific since they depend on the purpose of the device and data services provided by it. Not all combinations of these subparameters are supported by GSM/UMTS (refer 3GPP TS 22.002 [1]).

`<speed>`: integer type

0 autobauding (automatic selection of the speed; this setting is possible in case of 3.1 kHz modem and non-transparent service)

1 300 bps (V.21)

2 1200 bps (V.22)

3 1200/75 bps (V.23)

4 2400 bps (V.22bis)

5 2400 bps (V.26ter)

6 4800 bps (V.32)

7 9600 bps (V.32)

12 9600 bps (V.34)

14 14400 bps (V.34)

15 19200 bps (V.34)

16 28800 bps (V.34)

17 33600 bps (V.34)

34 1200 bps (V.120)

36 2400 bps (V.120)

38 4800 bps (V.120)

39 9600 bps (V.120)

43 14400 bps (V.120)

47 19200 bps (V.120)

48 28800 bps (V.120)

49 38400 bps (V.120)

50 48000 bps (V.120)

51 56000 bps (V.120)

65 300 bps (V.110)

66 1200 bps (V.110)

68 2400 bps (V.110 or X.31 flag stuffing)

70 4800 bps (V.110 or X.31 flag stuffing)

71 9600 bps (V.110 or X.31 flag stuffing)

75 14400 bps (V.110 or X.31 flag stuffing)

79 19200 bps (V.110 or X.31 flag stuffing)

80 28800 bps (V.110 or X.31 flag stuffing)

81 38400 bps (V.110 or X.31 flag stuffing)

82 48000 bps (V.110 or X.31 flag stuffing)

83 56000 bps (V.110 or X.31 flag stuffing; this setting can be used in conjunction with asynchronous non-transparent UDI or RDI service in order to get FTM)

84 64000 bps (X.31 flag stuffing; this setting can be used in conjunction with asynchronous non-transparent UDI service in order to get FTM)

115 56000 bps (bit transparent)

116 64000 bps (bit transparent)

120 32000 bps (PIAFS32k)

121 64000 bps (PIAFS64k)

130 28800 bps (multimedia)

131 32000 bps (multimedia)

132 33600 bps (multimedia)

133 56000 bps (multimedia)

134 64000 bps (multimedia)

all other values below 128 are reserved by the present document.

`<name>`: integer type

0 data circuit asynchronous (UDI or 3.1 kHz modem)

1 data circuit synchronous (UDI or 3.1 kHz modem)

2 PAD Access (asynchronous) (UDI)

3 Packet Access (synchronous) (UDI)

4 data circuit asynchronous (RDI)

5 data circuit synchronous (RDI)

6 PAD Access (asynchronous) (RDI)

7 Packet Access (synchronous) (RDI)

all other values below 128 are reserved by the present document.

`<ce>`: integer type

0 transparent

1 non-transparent

2 both, transparent preferred

3 both, non-transparent preferred

Implementation

Mandatory when data calls implemented.

6.8 Radio link protocol +CRLP

Table 15: +CRLP parameter command syntax

Command	Possible response(s)
`+CRLP=[<iws>[,<mws>[,<T1>[,<N2>[,<ver>[,<T4>]]]]]]`	

`+CRLP?`	`+CRLP: <iws>,<mws>,<T1>,<N2>[,<ver1>[,<T4>]]`
	`[<CR><LF>+CRLP: <iws>,<mws>,<T1>,<N2>[,<ver2>[,<T4>]]`
	`[...]]`

+CRLP=?	+CRLP: (list of supported <iws>s),(list of supported <mws>s), (list of supported <T1>s),(list of supported <N2>s)[,<ver1> [,(list of supported <T4>s)]] [<CR><LF>+CRLP: (list of supported <iws>s),(list of supported <mws>s),(list of supported <T1>s),(list of supported <N2>s) [,<ver2>[,(list of supported <T4>s)]] [...]]

Description

Radio link protocol (RLP) parameters used when non-transparent data calls are originated may be altered with set command. Available command subparameters depend on the RLP versions implemented by the device (e.g. <ver> may not be available if device supports only versions 0 and 1).

NOTE 1: If radio link protocol is not used, but some other error correcting protocol (for transparent data calls), ITU-T Recommendation V.250 [14] Error Control Selection test command +ES=? may be used to indicate the presence of the protocol.

Read command returns current settings for each supported RLP version <ver*x*>. Only RLP parameters applicable to the corresponding <ver*x*> are returned.

Test command returns values supported as a compound value. If MT/TA supports several RLP versions <ver*x*>, the RLP parameter value ranges for each <ver*x*> are returned in a separate line.

Defined values

<ver>, <ver*x*>: RLP version number in integer format; when version indication is not present it shall equal 0

NOTE 2: Versions 0 and 1 share the same parameter set. Read and test commands shall return only one line for this set (where <ver*x*> is not present).

<iws>, <mws>, <T1>, <N2>, <T4>: IWF to MS window size, MS to IWF window size, acknowledgement timer T1, retransmission attempts N2, re-sequencing period T4 in integer format (default values and value ranges depend on RLP version; refer 3GPP TS 24.022 [18]): T1 and T4 are in units of 10 ms.

Implementation

Mandatory when RLP implemented.

6.9 Service reporting control +CR

Table 16: +CR parameter command syntax

Command	Possible response(s)
+CR=[<mode>]	
+CR?	+CR: <mode>
+CR=?	+CR: (list of supported <mode>s)

Description

Set command controls whether or not intermediate result code +CR: <serv> is returned from the TA to the TE. If enabled, the intermediate result code is transmitted at the point during connect negotiation at which the TA has determined which speed and quality of service will be used, before any error control or data compression reports are transmitted, and before the intermediate result code CONNECT is transmitted.

NOTE: This command replaces ITU-T Recommendaion V.250 [14] command Modulation Reporting Control +MR, which is not appropriate for use in the GSM/UMTS network. Possible error control (other than radio link protocol) and data compression reporting can be enabled with V.250 commands Error Control Reporting +ER and Data Compression Reporting +DR.

Test command returns values supported as a compound value.

Defined values

<mode>: integer type

0 disables reporting

1 enables reporting

<serv>:

ASYNC	asynchronous transparent
SYNC	synchronous transparent
REL ASYNC	asynchronous non-transparent
REL SYNC	synchronous non-transparent
GPRS [<L2P>]	GPRS

<L2P> proposes a layer 2 protocol to use between the MT and the TE. It is defined in the Enter GPRS Data Mode (+CGDATA) command.

Implementation

Mandatory when data calls implemented.

6.10 Extended error report +CEER

Table 17: +CEER action command syntax

Command	Possible response(s)
+CEER	+CEER: <report>
+CEER=?	

Description

Execution command causes the TA to return one or more lines of information text <report>, determined by the MT manufacturer, which should offer the user of the TA an extended report of the reason for

- the failure in the last unsuccessful call setup (originating or answering) or in-call modification;
- the last call release;
- the last unsuccessful GPRS attach or unsuccessful PDP context activation;
- the last GPRS detach or PDP context deactivation.

Typically, the text will consist of a single line containing the cause information given by GSM/UMTS network in textual format.

Defined values

<report>: the total number of characters, including line terminators, in the information text shall not exceed 2041 characters.

Text shall not contain the sequence 0<CR> or OK<CR>.

Implementation

Optional.

6.11 Cellular result codes +CRC

Table 18: +CRC parameter command syntax

Command	Possible response(s)
+CRC=[<mode>]	
+CRC?	+CRC: <mode>
+CRC=?	+CRC: (list of supported <mode>s)

Description

Set command controls whether or not the extended format of incoming call indication or GPRS network request for PDP context activation or notification for VBS/VGCS calls is used. When enabled, an incoming call is indicated to the TE with unsolicited result code +CRING: <type> instead of the normal RING.

Test command returns values supported as a compound value.

NOTE 1: Similar command may be found in TIA IS-99 [15] and TIA IS-135 [16].

Defined values

<mode>: integer type

0 disables extended format

1 enables extended format

<type>:

ASYNC [,<priority>[,<subaddr>,<satype>]]	asynchronous transparent
SYNC [,<priority>[,<subaddr>,<satype>]]	synchronous transparent
REL ASYNC [,<priority>[,<subaddr>,<satype>]]	asynchronous non-transparent
REL SYNC [,<priority>[,<subaddr>,<satype>]]	synchronous non-transparent
FAX [,<priority>[,<subaddr>,<satype>]]	facsimile (TS 62)
VOICE [,<priority>[,<subaddr>,<satype>]]	normal voice (TS 11) (see NOTE 2)
VOICE/VIDEO [,<ccid*x*>[,<priority>[,<subaddr>,<satype>]]]	voice or video call (see NOTE 2)
VOICE/*XXX* [,<priority>[,<subaddr>,<satype>]]	voice followed by data (BS 81) (*XXX* is ASYNC, SYNC, REL ASYNC or REL SYNC)
ALT VOICE/*XXX* [,<priority>[,<subaddr>,<satype>]]	alternating voice/data, voice first (BS 61)
ALT *XXX*/VOICE [,<priority>[,<subaddr>,<satype>]]	alternating voice/data, data first (BS 61)
ALT VOICE/FAX [,<priority>[,<subaddr>,<satype>]]	alternating voice/fax, voice first (TS 61)

ALT FAX/VOICE [,<priority>[,<subaddr>,<satype>]]	alternating voice/fax, fax first (TS 61)
GPRS <PDP_type>, <PDP_addr>[, [<L2P>][,<APN>]]	GPRS network request for PDP context activation
VGC <GCA>, <GId>, <ackflag> [,<priority>]	voice group call (TS 91)
VBC <GCA>, <GId>, <ackflag> [,<priority>]	voice broadcast call (TS 92)

NOTE 2: The <type>=VOICE/VIDEO is used for voice and/or video calls. It is implementation specific whether this type will replace the <type>=VOICE or if both the types <type>=VOICE/VIDEO and <type>=VOICE are supported.

<priority> indicates the eMLPP priority level of the incoming call by paging, notification or setup message. The priority level values are as defined in eMLPP specification 3GPP TS 22.067 [54].

<subaddr>: string type subaddress of format specified by <satype>

<satype>: type of subaddress octet in integer format (refer 3GPP TS 24.008 [8] subclause 10.5.4.8) or RFC 4715 [122] appendix A.

<ccid*x*>: integer type. Call identification number, see +CLCCS.

<PDP_type>, <PDP_addr> and <APN> are as defined in the Define PDP Context (+CGDCONT) command. <L2P> proposes a layer 2 protocol to use between the MT and the TE. It is defined in the Enter GPRS Data Mode (+CGDATA) command. If the MT is unable to announce to the TE the network's request (for example it is in V.250 online data state) the MT shall reject the request. No corresponding unsolicited result code shall be issued when the MT returns to a command state.

<GCA> is a part of the group call reference as specified in 3GPP TS 23.003 [7] and indicates group call area. See the commands +CAJOIN, +CAREJ and +CALCC.

<GId> is a part of the group call reference as specified in 3GPP TS 23.003 [7] and indicates group call identification. See the commands +CAJOIN, +CAREJ and +CALCC.

<ackflag>: proposes that a predefined confirmation procedure is to be used after the call is ended. The value 1 indicates that a predefined confirmation procedure is to be used after the call is ended. The value 0 indicates that no confirmation procedure is required. See the parameter <ack_flag> of command +CALCC.

Implementation

Mandatory when data or fax circuit mode calls are implemented, or for an MT supporting AT commands only and eMLPP or VGCS or VBS is implemented.

6.12 HSCSD device parameters +CHSD

Table 19: +CHSD action command syntax

Command	Possible response(s)
+CHSD	+CHSD: <mclass>,<maxRx>,<maxTx>,<sum>,<codings> *+CME ERROR: <err>*
+CHSD=?	

Description

Execution command returns information about HSCSD features (refer 3GPP TS 22.034 [29]) supported by the MT/TA. Refer subclause 9.2 for possible <err> values.

The return information is only applicable in GERAN.

Defined values

<mclass>: integer type; multislot class

<maxRx>: integer type; maximum number of receive timeslots that MT can use

<maxTx>: integer type; maximum number of transmit timeslots that MT can use

<sum>: integer type; total number of receive and transmit timeslots that MT can use at the same time (per TDMA frame). The following applies in a HSCSD call: 1 ≤ (receive slots) + (transmit slots) ≤ <sum>

<codings> is a sum of integers each representing a supported channel coding (e.g. value 5 indicates that 4,8k and 9,6k channel codings are supported):

1 4,8k full rate data traffic channel

4 9,6k full rate data traffic channel

8 14,4k full rate data traffic channel

16 28,8k full rate data traffic channel (only possible when 14.4k is supported)

32 32,0k full rate data traffic channel (only possible in a two-timeslot configuration)

64 43,2k full rate data traffic channel (only possible when 14.4k is supported)

Implementation

Mandatory when HSCSD implemented.

This command is not applicable to UTRAN or E-UTRAN UEs.

6.13 HSCSD transparent call configuration +CHST

Table 20: +CHST parameter command syntax

Command	Possible response(s)
+CHST=[<wRx>[,<codings>]]	
+CHST?	+CHST: <wRx>,<codings>
+CHST=?	

Description

Set command controls parameters for transparent HSCSD calls in GERAN. Changing them during a call does not affect the current call.

NOTE: In UTRAN or E-UTRAN, values set with this command are not needed. The only applicable parameter is <SPEED>, which is set with +CBST command.

Defined values

<wRx>: integer type; wanted amount of receive timeslots. Default value 0 indicates that TA shall calculate a proper value from currently selected fixed network user rate (<speed> subparameter from +CBST command) and <codings>

<codings>: a sum of integers each representing a channel coding that is accepted for transparent HSCSD calls. Default value 0 indicates that all supported codings are accepted (refer +CHSD command for other values)

Implementation

Mandatory when transparent HSCSD implemented.

This command is not applicable to UTRAN or E-UTRAN UEs.

6.14 HSCSD non-transparent call configuration +CHSN

Table 21: +CHSN parameter command syntax

Command	Possible response(s)
+CHSN=[<wAiur>[,<wRx>[,<topRx>[,<codings>]]]]	
+CHSN?	+CHSN: <wAiur>,<wRx>,<topRx>,<codings>
+CHSN=?	+CHSN: (list of supported <wAiur>s),(list of supported <wRx>s),(list of supported <topRx>s),(list of supported <codings>s)

Description

Set command controls parameters for originating non-transparent HSCSD calls. Values may also be used during mobile terminated data call setup. In GERAN, changing <topRx> or <codings> value during a call does not affect the current call. In GERAN, changing of <wAiur> or <wRx> affects the current call only if <topRx> was non-zero when call was established.

Defined values

<wAiur>: integer type; wanted air interface user rate. Default value 0 indicates that TA shall calculate a proper value from currently selected fixed network user rate (<speed> subparameter from +CBST command), <codings>, and <wRx> (or <maxRx> from +CHSD command if <wRx>=0). Other values:

1 9600 bps

2 14400 bps

3 19200 bps

4 28800 bps

5 38400 bps

6 43200 bps

7 57600 bps

<wRx>: integer type; wanted amount of receive timeslots. Default value 0 indicates that TA shall calculate a proper value from currently selected <wAiur> and <codings>. This parameter is not applicable to UTRAN or E-UTRAN UEs.

<topRx>: integer type; top value for <wRx> that user is going to request during the next established non-transparent HSCSD call. Default value 0 indicates that user is not going to change <wAiur>/<wRx> during the next call. This parameter is not applicable to UTRAN or E-UTRAN UEs.

<codings>: a sum of integers each representing a channel coding that is accepted for non-transparent HSCSD calls. Default value 0 indicates that all supported codings are accepted (refer +CHSD command for other values). This parameter is not applicable to UTRAN or E-UTRAN UEs.

Implementation

Mandatory when non-transparent HSCSD implemented.

6.15 HSCSD current call parameters +CHSC

Table 22: +CHSC action command syntax

Command	Possible response(s)
+CHSC	+CHSC: <rx>,<tx>,<aiur>,<coding>

+CHSC=?	

Description

Execution command returns information about current HSCSD call. If no HSCSD call is active, all parameters returned shall equal zero. If HSCSD call is active in UTRAN or E-UTRAN, all non-applicable parameters returned shall be equal to zero. (It is manufacturer specific whether non-zero information is returned in case of an active normal single-slot data call.)

Defined values

<rx>: integer type; number of receive timeslots currently in use. This parameter is not applicable in UTRAN or E-UTRAN.

<tx>: integer type; number of transmit timeslots currently in use. This parameter is not applicable in UTRAN or E-UTRAN.

<aiur>: integer type; current air interface user rate (in case of transparent service this equals fixed network user rate) (refer +CHSN command for possible values). For the two-timeslot ECSD bit transparent configuration the following additional values apply:

8 56000 bps

9 64000 bps

<coding>: current channel coding (refer +CHSD command for possible values). This parameter is not applicable in UTRAN or E-UTRAN.

Implementation

Optional.

6.16 HSCSD parameters report +CHSR

Table 23: +CHSR parameter command syntax

Command	Possible response(s)
+CHSR=[<mode>]	
+CHSR?	+CHSR: <mode>
+CHSR=?	+CHSR: (list of supported <mode>s)

Description

Enabled command returns intermediate result code +CHSR: <type> from the TA to the TE when an HSCSD call is being set up. The result code represents the current (negotiated or renegotiated) HSCSD parameters. If enabled, the intermediate result code is transmitted at the point of the call setup negotiation where the TA has determined what type of an HSCSD connection will be used. Result code transmission is done after possible service (+CR), error control (+ER), and/or compression (+DR) reporting but before possible TE-TA rate (+ILRR) reporting and before the intermediate result code CONNECT is transmitted. The format of the intermediate result code is:

+CHSR: <rx>,<tx>,<aiur>,<coding>

For the value definitions, refer to +CHSN and +CHSC commands. For instance, for a non-transparent HSCSD call, result code '+CHSR: 2,2,4,8' means that the call has two timeslots in both up- and downlink, the air interface user rate is 28800 bps, and the used channel coding TCH/F14.4.

In UTRAN or E-UTRAN, all non-applicable parameters returned shall be equal to zero.

Read command returns the current value of <mode>.

Test command returns the values supported by the UE.

Defined values

<mode>: integer type

0 disables reporting

1 enables reporting

Implementation

Mandatory when HSCSD implemented

6.17 HSCSD automatic user initiated upgrading +CHSU

Table 24: +CHSU parameter command syntax

Command	Possible response(s)
+CHSU=<mode>	
+CHSU?	+CHSU: <mode>
+CHSU=?	+CHSU: (list of supported <mode>s)

Description

Set command controls whether or not automatic user initiated service level upgrading shall be used for non-transparent HSCSD calls. "Automatic" means that, if enabled, the ME/TA shall use the UP bit in the received RLP frames to determine when to initiate user initiated service level upgrading (i.e. when to modify the +CHSN parameters <wAiur> and/or <wRx> for the current call). Refer to 3GPP TS 27.001 [41] for details on the interpretation of the UP bit(s).

NOTE 1: The validity of the UP bit in the RLP frames depends on the result of the RLP negotiations. The UP bit shall only be used if the result of the RLP negotiations were successful with respect to the UP bit.

NOTE 2: This command is only applicable in GERAN.

Defined values

<mode>: integer type

0 disables use of UP bit for upgrading

1 enables use of UP bit for upgrading

Implementation

Optional

This command is not applicable to UTRAN or E-UTRAN UEs.

6.18 HSCSD non-transparent asymmetry configuration +CHSA

Table 25: +CHSA parameter command syntax

Command	Possible response(s)
+CHSA=<mode>	
+CHSA?	+CHSA: <mode>
+CHSA=?	+CHSA: (list of supported <mode>s)

Description

Set command controls the preferred asymmetry bias for non-transparent ECSD calls. Downlink biased asymmetry means that 8-PSK modulation is preferred downlink and GMSK modulation uplink. Uplink based asymmetry means

that 8-PSK modulation is preferred uplink and GMSK downlink. Changing of <mode> affects the current call only if <topRx> (refer +CHSN) was non-zero when call was established.

Test command returns values supported by the MT/TA as compound values. The <mode> subparameter range indirectly indicates the UE Type; range (0-1) indicates UE Type A and range (0-2) indicates UE Type B.

NOTE 1: ECSD is also controlled by +CHSD, +CHSN and +CHST.

NOTE 2: This command is only applicable in GERAN.

Defined values

<mode>: integer type

0 No preference

1 Downlink biased asymmetry

2 Uplink biased asymmetry

Implementation

Mandatory when non-transparent ECSD is implemented.

This command is not applicable to UTRAN or E-UTRAN UEs.

6.19 Single numbering scheme +CSNS

Table 26: +CSNS parameter command syntax

Command	Possible response(s)
+CSNS=[<mode>]	
+CSNS?	+CSNS: <mode>
+CSNS=?	+CSNS: (list of supported <mode>s)

Description

Set command selects the bearer or teleservice to be used when mobile terminated single numbering scheme call is established. Parameter values set with +CBST command shall be used when <mode> equals to a data service.

Test command returns values supported as compound values.

Defined values

<mode>: integer type

0 voice

1 alternating voice/fax, voice first (TS 61)

2 fax (TS 62)

3 alternating voice/data, voice first (BS 61)

4 data

5 alternating voice/fax, fax first (TS 61)

6 alternating voice/data, data first (BS 61)

7 voice followed by data (BS 81)

Implementation

Optional.

6.20 Voice hangup control +CVHU

Table 27: +CVHU parameter command syntax

Command	Possible response(s)
+CVHU=[<mode>]	
+CVHU?	+CVHU: <mode>
+CVHU=?	+CVHU: (list of supported <mode>s)

Description

Set command selects whether ATH or "drop DTR" shall cause a voice connection to be disconnected or not. By voice connection is also meant alternating mode calls that are currently in voice mode. (See subclause 6.6).

NOTE: When <mode> = 2, this command must be seen in conjunction with the ITU-T Recommendation V.250 [14] command &D. Else &D shall be ignored.

Defined values

<mode>: integer type

0 "Drop DTR" ignored but OK response given. ATH disconnects.

1 "Drop DTR" and ATH ignored but OK response given.

2 "Drop DTR" behaviour according to &D setting. ATH disconnects.

Implementation

Optional

6.21 CCITT V.120 [36] rate adaption protocol +CV120

Table 28: +CV120 parameter command syntax

Command	Possible response(s)
+CV120=[<rah>[,<mfm>[,<mode>[,<llineg>[,<assign>[,<negtype>]]]]]]	
+CV120?	+CV120: <rah>,<mfm>,<mode>,<llineg>,<assign>,<negtype>
+CV120=?	+CV120: (list of supported <rah>s),(list of supported <mfm>s),(list of supported <mode>s),(list of supported <llineg>s),(list of supported <assign>s),(list of supported <negtype>s)

Description

Set command sets the values of the V.120 protocol parameters (defined in CCITT Recommendation V.120 [36]) that are carried in the GSM BC and/or LLC information elements.

Read command returns current settings for the V.120 parameters.

Test command returns values supported as a compound value.

Defined values

<rah>: integer type

0 rate adaption header not included

1 rate adaption header included (mandatory for protocol sensitive modes).

<mfm>: integer type

0 multiple frame establishment not supported, only UI frames allowed

1 multiple frame establishment supported, both I and UI frames allowed.

<mode>: integer type

0 bit transparent mode of operation

1 protocol sensitive mode of operation.

<llineg>: integer type

0 no negotiation, LLI = 256 only

1 negotiation allowed.

NOTE: <negtype> indicates the connection over which the negotiation is performed.

<assign>: integer type

0 message originator is "default assignee"

1 message originator is "assignor only".

<negtype>: integer type

0 negotiation is done using logical link zero

1 negotiation is done with USER INFORMATION messages on a temporary signalling connection.

GSM/UMTS does not support all the possible modes of V.120 operation. However, in order to accommodate possible future additions, the complete set of parameters is included in the command.

The permitted values are: 1, 1 or 0, 1, 0, 0, 0.

A recommended set of default values is: 1, 1, 1, 0, 0, 0.

Implementation

Mandatory, if the MT supports V.120 interworking.

6.22 Settings date format +CSDF

Table 29: +CSDF parameter command syntax

Command	Possible response(s)
+CSDF=[[<mode>][,<auxmode>]]	*+CME ERROR: <err>*
+CSDF?	+CSDF: <mode>[,<auxmode>] *+CME ERROR: <err>*
+CSDF=?	+CSDF: (list of supported <mode>s) [,(list of supported <auxmode>s)] *+CME ERROR: <err>*

Description

This command sets the date format via MMI of the date information presented to the user, which is specified by use of the <mode> parameter. The <mode> affects the date format on the phone display and doesn't affect the date format of the AT command serial interface. The command also sets the date format of the TE-TA interface, which is specified by use of the <auxmode> parameter (e.g. the <auxmode> affects the <time> of +CCLK and +CALA). If the parameter is omitted ("+CSDF=","+CSDF=<mode>","+CSDF=,<auxmode>"),then this sets the default value.

Defined values

<mode>: integer type

NOTE 1: It is manufacturer specific which modes that are supported.

1 DD-MMM-YYYY

NOTE 2: Presentation of MMM is language dependent.

2 DD-MM-YY

3 MM/DD/YY

4 DD/MM/YY

5 DD.MM.YY

6 YYMMDD

7 YY-MM-DD

8-255 Manufacturer specific

<auxmode>: integer type

1 yy/MM/dd

2 yyyy/MM/dd

all other values are reserved by the present document

NOTE 3: The <time> format of +CCLK and +CALA "yy/MM/dd,hh:mm:ss±zz" when <auxmode>=1 and it is "yyyy/MM/dd,hh:mm:ss±zz" when <auxmode>=2. If the MT does not support time zone information then the three last characters may be omitted (see +CCLK command).

Implementation

Optional

6.23 Silence command +CSIL

Table 30: +CSIL parameter command syntax

Command	Possible response(s)
+CSIL=[<mode>]	*+CME ERROR: <err>*
+CSIL?	+CSIL: <mode> *+CME ERROR: <err>*
+CSIL=?	+CSIL: (list of supported <mode>s) *+CME ERROR: <err>*

Description

Set command enables/disables the silent mode. When the phone is in silent mode, all sounds from MT are suppressed except voice.

Read command reads the current setting.

Test command lists the supported modes.

Defined values

<mode>: integer type

0 Silent mode off

1 Silent mode on

Implementation

Optional

6.24 Settings time format +CSTF

Table 31: +CSTF parameter command syntax

Command	Possible response(s)
+CSTF=[<mode>]	*+CME ERROR: <err>*
+CSTF?	+CSTF: <mode> *+CME ERROR: <err>*
+CSTF=?	+CSTF: (list of supported <mode>s) *+CME ERROR: <err>*

Description

Set command sets the time format of the time information presented to the user.

Read command reads the current setting.

Test command reads the supported <modes>s.

Defined values

<mode>: integer type

1 HH:MM (24 hour clock)

2 HH:MM a.m./p.m.

3-7 Manufacturer specific

Implementation

Optional

6.25 ITU-T Recommendation V.250 [14] call control commands

Table 32: V.250 call control commands

Command	Subclause	Impl.	Use in GSM/UMTS
D[<dial_string>][;]	6.3.1	mand.	originates a call
T	6.3.2	mand.	ignored (select tone dialling)
P	6.3.3	mand.	ignored (select pulse dialling)
A	6.3.5	mand.	answer a call
H[<value>]	6.3.6	mand.	hang-up a single mode call; for alternate mode call refer subclause "Hangup call +CHUP" (only value equal to zero needed)
O[<value>]	6.3.7	mand.	returns TA to online data state from online command mode (only value equal to zero needed)
S0=[<value>]	6.3.8	mand.	sets the number of call indications (rings) before automatically answering the call; value equalling zero disables automatic answering and is the default
S6=[<value>]	6.3.9	mand.	ignored (pause before blind dialling)
S7=[<value>]	6.3.10	mand.	sets number of seconds to wait for completion of call answering or originating procedure before giving up and disconnecting
S8=[<value>]	6.3.11	mand.	sets number of seconds to wait when comma dial modifier encountered in dial string of D command (default is 2 seconds)
S10=[<value>]	6.3.12	mand.	sets number of tenths of seconds to wait before disconnecting after TA has indicated the absence of received line signal
L[<value>]	6.3.13	mand.	ignored (monitor speaker loudness)
M[<value>]	6.3.14	mand.	ignored (monitor speaker mode)

Implementation of commands marked as mandatory is mandatory only if call control functionality is supported.

6.26 ITU-T Recommendation V.250 [14] data compression commands

Table 33: V.250 data compression commands

Command	Subclause	Impl.	Use in GSM/UMTS
+DS=[<dir>[,<neg>[,<P1>[,<P2>]]]]	6.6.1	mand. when V.42bis	controls ITU-T Recommendation V.42bis data compression functions; for subparameter defaults in GSM/UMTS refer 3GPP TS 24.022 [18]
+DR=[<value>]	6.6.2	mand. when V.42bis	determines whether the use of V.42bis is informed using intermediate result code +DR: <type> before going online data state after call answering or originating

6.27 Initiate eCall +CECALL

Table 6.27-1: +CECALL parameter command syntax

Command	Possible response
+CECALL=<type_of_eCall>	
+CECALL?	+CECALL: [<type_of_eCall>]
+CECALL=?	+CECALL: (list of supported <type_of_eCall>s)

Description

Set command is used to trigger an eCall to the network. Based on the configuration selected, it can be used to either trigger a test call, a reconfiguration call, a manually initiated eCall or an automatically initiated eCall.

Read command returns the type of eCall that is currently in progress, if any.

Test command returns the supported values and ranges.

Defined values

<type_of_eCall>: integer type

0 test call

1 reconfiguration call eCall

2 manually initiated eCall

3 automatically initated eCall

Implementation

Optional.

6.28 Informative examples

The alternating mode call handling (voice and fax, or voice and data) and the data call setup commands are defined such that the dialling command of ITU-T Recommendation V.250 [14] (D) still always originates a call. The purpose is to support all current TE applications using the dialling command as default. Fax calls are controlled following the rules of ITU-T Recommendation T.31 [11] and ITU-T Recommendation T.32 [12] standards.

An example where a voice call is originated:

```
ATD+1 812 555673I;  (type of address defaults to 145, CLI presentation is restricted for this call)
OK                  (call setup was successful)
```

An example where a voice call is attempted from a phonebook:

```
ATD>"Doe Joe"G;  (enable CUG control for this call)
+CME ERROR: 22   (entry "Doe Joe" is not found)
```

Also supplementary services may be controlled using dial command according to 3GPP TS 22.030 [19]. An example of call forwarding on no reply for telephony with the adjustment of the no reply condition timer on 25 seconds:

```
ATD**61*+1812555673*11*25#
OK                (modification was successful)
```

Two new commands are created for controlling the alternating mode calls. First one, Call Mode (+CMOD), selects between single and alternating mode. Because this is a crucial command, it is defined that the value is set back to zero (single mode) after every successfully originated alternating mode call. Also on power-up and factory or user resets, the value is set to zero. The second new command, Hangup Call (+CHUP), is not a replacement of ITU-T Recommendation V.250 [14] command H, but a command which reliably disconnects the call in GSM/UMTS network. This is defined because the H command is used to switch from fax or data mode to voice mode.

The setting of GSM/UMTS bearer service (data circuit duplex asynchronous and synchronous, PAD access circuit asynchronous, or data packet duplex synchronous), is done with Select Bearer Service Type (+CBST). It chooses one of the four mentioned bearer services, the data rate of the service (or actually the modulation when modem IWFs are used), and enables or disables RLP. Command Radio Link Protocol (+CRLP) is used to set the RLP parameters in the radio path.

Service Reporting Control command (+CR) is defined similarly as the reporting of modulation, V.18, error control, and data compression which are ITU-T Recommendation V.250 [14] features used to show information about the type of the established connection before the CONNECT intermediate result code. +CR command has one subparameter which specifies whether the intermediate result code +CR: <serv> is returned or not. The result code should be returned before any ITU-T Recommendation V.250 [14] reporting result codes. An example of setting up an asynchronous 9600 bit/s modem connection with service reporting:

```
AT+CBST=7,0,1     (asynchronous modem 9600 bit/s and RLP)
OK
AT+CR=1           (enable reporting)
OK
ATD1234567890
+CR: REL ASYNC
CONNECT 9600
```

As GSM/UMTS network offers more information about the reason of the failure in call originating and answering than normal PSTN, it is useful to add an extra command to return this information to the TE. This information should not be returned always after unsuccessful call originating or answering, because many TE applications look for just the regular `NO CARRIER`, `BUSY`, `NO ANSWER` and `CONNECT` messages. Action command Extended Error Report (`+CEER`) does not have any subparameters, and it returns the cause of the latest call setup failure. This information may be the textual presentation of the GSM/UMTS network failure code (refer 3GPP TS 24.008 [8] Annex H), or some other information defined by the TA manufacturer.

7 Network service related commands

7.0 General

This clause describes GSM/UMTS network related commands, which are not covered in call control clause of the present document. Commands include GSM/UMTS supplementary service handling, MSISDN query, MT and network facility locking, and network registration information query.

7.1 Subscriber number +CNUM

Table 34: +CNUM action command syntax

Command	Possible response(s)

`+CNUM`	`+CNUM: [<alpha1>],<number1>,<type1>[,<speed>,<service>[,<itc>]]`
	`[<CR><LF>+CNUM: [<alpha2>],<number2>,<type2>[,<speed>,<service>`
	`[,<itc>]]`
	`[...]]`
	
	`+CME ERROR: <err>`

`+CNUM=?`	

Description

Action command returns the MSISDNs related to the subscriber (this information can be stored in the SIM/UICC or in the MT). When storing information in the SIM/UICC, if the currently selected card slot contains a SIM card or a UICC with an active GSM application, the information is stored in the EF_{MSISDN} under $DF_{Telecom}$. If the currently selected card slot contains a UICC with an active USIM application, the information is stored in the EF_{MSISDN} under ADF_{USIM}). If subscriber has different MSISDN for different services, each MSISDN is returned in a separate line. Refer subclause 9.2 for possible `<err>` values.

Defined values

`<alphax>`: optional alphanumeric string associated with `<numberx>`; used character set should be the one selected with command Select TE Character Set `+CSCS`

`<numberx>`: string type phone number of format specified by `<typex>`

`<typex>`: type of address octet in integer format (refer 3GPP TS 24.008 [8] subclause 10.5.4.7)

`<speed>`: as defined in subclause 6.7

`<service>`: integer type (service related to the phone number)

0 asynchronous modem

1 synchronous modem

2 PAD Access (asynchronous)

3 Packet Access (synchronous)

4 voice

5 fax

all other values below 128 are reserved by the present document

<itc>: integer type (information transfer capability)

0 3,1 kHz

1 UDI

Implementation

Optional.

7.2 Network registration +CREG

Table 35: +CREG parameter command syntax

Command	Possible response(s)
+CREG=[<n>]	*+CME ERROR: <err>*
+CREG?	+CREG: <n>,<stat>[,[<lac>],[<ci>],[<AcT>] [,<cause_type>,<reject_cause>]]
+CREG=?	+CREG: (list of supported <n>s)

Description

Set command controls the presentation of an unsolicited result code +CREG: <stat> when <n>=1 and there is a change in the MT's circuit mode network registration status in GERAN/UTRAN/E-UTRAN, or unsolicited result code +CREG: <stat>[,[<lac>],[<ci>],[<AcT>]] when <n>=2 and there is a change of the network cell in GERAN/UTRAN/E-UTRAN. The parameters <AcT>, <lac> and <ci> are sent only if available. The value <n>=3 further extends the unsolicited result code with [,<cause_type>,<reject_cause>], when available, when the value of <stat> changes.

NOTE 1: If the MT also supports GPRS services and/or EPS services, the +CGREG command and +CGREG: result codes and/or the +CEREG command and +CEREG: result codes apply to the registration status and location information for those services.

Read command returns the status of result code presentation and an integer <stat> which shows whether the network has currently indicated the registration of the MT. Location information elements <lac>, <ci> and <AcT>, if available, are returned only when <n>=2 and MT is registered in the network. The parameters [,<cause_type>,<reject_cause>], if available, are returned when <n>=3. Refer subclause 9.2 for possible <err> values.

Test command returns values supported as a compound value.

Defined values

<n>: integer type

0 disable network registration unsolicited result code

1 enable network registration unsolicited result code +CREG: <stat>

2 enable network registration and location information unsolicited result code
`+CREG: <stat>[,[<lac>],[<ci>],[<AcT>]]`

3 enable network registration, location information and cause value information unsolicited result code
`+CREG: <stat>[,[<lac>],[<ci>],[<AcT>][,<cause_type>,<reject_cause>]]`

`<stat>`: integer type; circuit mode registration status

0 not registered, MT is not currently searching a new operator to register to

1 registered, home network

2 not registered, but MT is currently searching a new operator to register to

3 registration denied

4 unknown (e.g. out of GERAN/UTRAN/E-UTRAN coverage)

5 registered, roaming

6 registered for "SMS only", home network (applicable only when <AcT> indicates E-UTRAN)

7 registered for "SMS only", roaming (applicable only when <AcT> indicates E-UTRAN)

8 attached for emergency bearer services only (see NOTE 2) (not applicable)

9 registered for "CSFB not preferred", home network (applicable only when <AcT> indicates E-UTRAN)

10 registered for "CSFB not preferred", roaming (applicable only when <AcT> indicates E-UTRAN)

NOTE 2: 3GPP TS 24.008 [8] and 3GPP TS 24.301 [83] specify the condition when the MS is considered as attached for emergency bearer services.

`<lac>`: string type; two byte location area code (when `<AcT>` indicates value 0 to 6), or tracking area code (when `<AcT>` indicates value 7). In hexadecimal format (e.g. "00C3" equals 195 in decimal).

`<ci>`: string type; four byte GERAN/UTRAN/E-UTRAN cell ID in hexadecimal format.

`<AcT>`: integer type; access technology of the serving cell

0 GSM

1 GSM Compact

2 UTRAN

3 GSM w/EGPRS (see NOTE 3)

4 UTRAN w/HSDPA (see NOTE 4)

5 UTRAN w/HSUPA (see NOTE 4)

6 UTRAN w/HSDPA and HSUPA (see NOTE 4)

7 E-UTRAN

NOTE 3: 3GPP TS 44.060 [71] specifies the System Information messages which give the information about whether the serving cell supports EGPRS.

NOTE 4: 3GPP TS 25.331 [74] specifies the System Information blocks which give the information about whether the serving cell supports HSDPA or HSUPA.

`<cause_type>`: integer type; indicates the type of `<reject_cause>`.

0 Indicates that <reject_cause> contains an MM cause value, see 3GPP TS 24.008 [8] Annex G.

1 Indicates that <reject_cause> contains a manufacturer specific cause.

<reject_cause>: integer type; contains the cause of the failed registration. The value is of type as defined by <cause_type>.

Implementation

Optional.

7.3 PLMN selection +COPS

Table 36: +COPS parameter command syntax

Command	Possible response(s)
+COPS=[<mode>[,<format>[,<oper>[,<AcT>]]]]	*+CME ERROR: <err>*
+COPS?	+COPS: <mode>[,<format>,<oper>[,<AcT>]] *+CME ERROR: <err>*
+COPS=?	+COPS: [list of supported (<stat>,long alphanumeric <oper>,short alphanumeric <oper>,numeric <oper>[,<AcT>])s][,,(list of supported <mode>s),(list of supported <format>s)] *+CME ERROR: <err>*

Description

Set command forces an attempt to select and register the GSM/UMTS/EPS network operator using the SIM/USIM card installed in the currently selected card slot. <mode> is used to select whether the selection is done automatically by the MT or is forced by this command to operator <oper> (it shall be given in format <format>) to a certain access technology, indicated in <AcT>. If the selected operator is not available, no other operator shall be selected (except <mode>=4). If the selected access technology is not available, then the same operator shall be selected in other access technology. The selected operator name format shall apply to further read commands (+COPS?) also. <mode>=2 forces an attempt to deregister from the network. The selected mode affects to all further network registration (e.g. after <mode>=2, MT shall be unregistered until <mode>=0 or 1 is selected). Refer subclause 9.2 for possible <err> values. This command should be abortable when registration/deregistration attempt is made.

Read command returns the current mode, the currently selected operator and the current Access Technology. If no operator is selected, <format>, <oper> and <AcT> are omitted.

Test command returns a set of five parameters, each representing an operator present in the network. A set consists of an integer indicating the availability of the operator <stat>, long and short alphanumeric format of the name of the operator, numeric format representation of the operator and access technology. Any of the formats may be unavailable and should then be an empty field. The list of operators shall be in order: home network, networks referenced in SIM or active application in the UICC (GSM or USIM) in the following order: HPLMN selector, User controlled PLMN selector, Operator controlled PLMN selector and PLMN selector (in the SIM or GSM application), and other networks.

It is recommended (although optional) that after the operator list TA returns lists of supported <mode>s and <format>s. These lists shall be delimited from the operator list by two commas.

The access technology selected parameters, <AcT>, should only be used in terminals capable to register to more than one access technology. Selection of <AcT> does not limit the capability to cell reselections, even though an attempt is made to select an access technology, the phone may still re-select a cell in another access technology.

Defined values

<mode>: integer type

0 automatic (<oper> field is ignored)

1 manual (<oper> field shall be present, and <AcT> optionally)

2 deregister from network

3 set only <format> (for read command +COPS?), do not attempt registration/deregistration (<oper> and <AcT> fields are ignored); this value is not applicable in read command response

4 manual/automatic (<oper> field shall be present); if manual selection fails, automatic mode (<mode>=0) is entered

<format>: integer type

0 long format alphanumeric <oper>

1 short format alphanumeric <oper>

2 numeric <oper>

<oper>: string type; <format> indicates if the format is alphanumeric or numeric; long alphanumeric format can be upto 16 characters long and short format up to 8 characters (refer GSM MoU SE.13 [9]); numeric format is the GSM Location Area Identification number (refer 3GPP TS 24.008 [8] subclause 10.5.1.3) which consists of a three BCD digit country code coded as in ITU-T Recommendation E.212 [10] Annex A, plus a two BCD digit network code, which is administration specific; returned <oper> shall not be in BCD format, but in IRA characters converted from BCD; hence the number has structure: (country code digit 3)(country code digit 2)(country code digit 1)(network code digit 3)(network code digit 2)(network code digit 1)

<stat>: integer type

0 unknown

1 available

2 current

3 forbidden

<AcT>: integer type; access technology selected

0 GSM

1 GSM Compact

2 UTRAN

3 GSM w/EGPRS (see NOTE 1)

4 UTRAN w/HSDPA (see NOTE 2)

5 UTRAN w/HSUPA (see NOTE 2)

6 UTRAN w/HSDPA and HSUPA (see NOTE 2)

7 E-UTRAN

NOTE 1: 3GPP TS 44.060 [71] specifies the System Information messages which give the information about whether the serving cell supports EGPRS.

NOTE 2: 3GPP TS 25.331 [74] specifies the System Information blocks which give the information about whether the serving cell supports HSDPA or HSUPA.

Implementation

Optional.

7.4 Facility lock +CLCK

Table 37: +CLCK action command syntax

Command	Possible response(s)
+CLCK=<fac>,<mode>[,<passwd>[,<class>]]	*+CME ERROR: <err>* **when <mode>=2 and command successful:** +CLCK: <status>[,<class1> [<CR><LF>+CLCK: <status>,<class2> [...]]
+CLCK=?	+CLCK: (list of supported <fac>s) *+CME ERROR: <err>*

Description

Execute command is used to lock, unlock or interrogate a MT or a network facility <fac>. Password is normally needed to do such actions. When querying the status of a network service (<mode>=2) the response line for 'not active' case (<status>=0) should be returned only if service is not active for any <class>. Refer subclause 9.2 for possible <err> values. This command should be abortable when network facilities are set or interrogated.

Call barring facilities are based on GSM/UMTS supplementary services (refer 3GPP TS 22.088 [6]). The interaction of these with other commands based on other GSM/UMTS supplementary services is described in the GSM/UMTS standard.

Test command returns facility values supported as a compound value.

Defined values

<fac> values reserved by the present document:

"CS" CNTRL (lock CoNTRoL surface (e.g. phone keyboard))

"PS" PH-SIM (lock PHone to SIM/UICC card installed in the currently selected card slot) (MT asks password when other than current SIM/UICC card inserted; MT may remember certain amount of previously used cards thus not requiring password when they are inserted)

"PF" lock Phone to the very First inserted SIM/UICC card (also referred in the present document as PH-FSIM) (MT asks password when other than the first SIM/UICC card is inserted)

"SC" SIM (lock SIM/UICC card installed in the currently selected card slot) (SIM/UICC asks password in MT power-up and when this lock command issued)

"AO" BAOC (Barr All Outgoing Calls) (refer 3GPP TS 22.088 [6] clause 1)

"OI" BOIC (Barr Outgoing International Calls) (refer 3GPP TS 22.088 [6] clause 1)

"OX" BOIC-exHC (Barr Outgoing International Calls except to Home Country) (refer 3GPP TS 22.088 [6] clause 1)

"AI" BAIC (Barr All Incoming Calls) (refer 3GPP TS 22.088 [6] clause 2)

"IR" BIC-Roam (Barr Incoming Calls when Roaming outside the home country) (refer 3GPP TS 22.088 [6] clause 2)

"NT" barr incoming calls from numbers Not stored to TA memory

"NM" barr incoming calls from numbers Not stored to MT memory

"NS" barr incoming calls from numbers Not stored to SIM/UICC memory

"NA" barr incoming calls from numbers Not stored in Any memory

"AB" All Barring services (refer 3GPP TS 22.030 [19]) (applicable only for <mode>=0)

"AG" All outGoing barring services (refer 3GPP TS 22.030 [19]) (applicable only for <mode>=0)

"AC" All inComing barring services (refer 3GPP TS 22.030 [19]) (applicable only for <mode>=0)

"FD" SIM card or active application in the UICC (GSM or USIM) fixed dialling memory feature (if PIN2 authentication has not been done during the current session, PIN2 is required as <passwd>)

"PN" Network Personalization (refer 3GPP TS 22.022 [33])

"PU" network sUbset Personalization (refer 3GPP TS 22.022 [33])

"PP" service Provider Personalization (refer 3GPP TS 22.022 [33])

"PC" Corporate Personalization (refer 3GPP TS 22.022 [33])

<mode>: integer type

0 unlock

1 lock

2 query status

<status>: integer type

0 not active

1 active

<passwd>: string type; shall be the same as password specified for the facility from the MT user interface or with command Change Password +CPWD

<class*x*> is a sum of integers each representing a class of information (default 7 - voice, data and fax):

1 voice (telephony)

2 data (refers to all bearer services; with <mode>=2 this may refer only to some bearer service if TA does not support values 16, 32, 64 and 128)

4 fax (facsimile services)

8 short message service

16 data circuit sync

32 data circuit async

64 dedicated packet access

128 dedicated PAD access

Implementation

The call barring supplementary service control is mandatory for MT supporting AT commands only and not supporting the control through dial command D.

7.5 Change password +CPWD

Table 38: +CPWD action command syntax

Command	Possible response(s)
+CPWD=<fac>,<oldpwd>,<newpwd>	*+CME ERROR: <err>*
+CPWD=?	+CPWD: list of supported (<fac>,<pwdlength>)s *+CME ERROR: <err>*

Description

Action command sets a new password for the facility lock function defined by command Facility Lock +CLCK. Refer subclause 9.2 for possible <err> values.

Test command returns a list of pairs which present the available facilities and the maximum length of their password.

Defined values

<fac>:

"P2" SIM PIN2

refer Facility Lock +CLCK for other values

<oldpwd>, <newpwd>: string type; <oldpwd> shall be the same as password specified for the facility from the MT user interface or with command Change Password +CPWD and <newpwd> is the new password; maximum length of password can be determined with <pwdlength>

<pwdlength>: integer type maximum length of the password for the facility

Implementation

Optional.

7.6 Calling line identification presentation +CLIP

Table 39: +CLIP parameter command syntax

Command	Possible response(s)
+CLIP=[<n>]	
+CLIP?	+CLIP: <n>,<m>
+CLIP=?	+CLIP: (list of supported <n>s)

Description

This command refers to the supplementary service CLIP (Calling Line Identification Presentation) according to 3GPP TS 22.081 [3] and OIP (Originating Identification Presentation) according to 3GPP TS 24.607 [119] that enables a called subscriber to get the calling line identity (CLI) of the calling party when receiving a mobile terminated call. Set command enables or disables the presentation of the CLI at the TE. It has no effect on the execution of the supplementary service CLIP / OIP in the network.

When <n>=1, the presentation of the calling line identity at the TE is enabled and when the calling subscriber allows, the unsolicited result code
+CLIP: <number>,<type>[,<subaddr>,<satype>[,[<alpha>][,<CLI_validity>]]] is returned after every RING (or +CRING: <type>; refer subclause "Cellular result codes +CRC") result code sent from TA to TE. It is manufacturer specific if this response is used when normal voice call is answered. The unsolicited result code +CLIP does not support numbers of the SIP URI format.

When <n>=0, the presentation of the calling line identity at the TE with unsolicited result code +CLIP is disabled.

The calling line identity can also be reported in unsolicited result codes +CMCCSS<*x*> / +CMCCSSEND, enabled with +CMCCS=3 (see AT command "monitor of current calls +CMCCS"). The unsolicited result codes +CMCCSS<*x*> / +CMCCSSEND support numbers of the SIP URI format.Read command gives the status of <n>, and also triggers an interrogation of the provision status of the CLIP supplementary service according to 3GPP TS 22.081 [3] and OIP supplementary service according to 3GPP TS 24.607 [119] (given in <m>).

Test command returns values supported as a compound value.

Defined values

<n>: integer type (parameter sets/shows the result code presentation status to the TE)

0 disable

1 enable

<m>: integer type (parameter shows the subscriber CLIP / OIP service status in the network).

0 CLIP / OIP not provisioned

1 CLIP / OIP provisioned

2 unknown (e.g. no network, etc.)

<number>: string type phone number of format specified by <type>

<type>: type of address octet in integer format (refer 3GPP TS 24.008 [8] subclause 10.5.4.7)

<subaddr>: string type subaddress of format specified by <satype>

<satype>: type of subaddress octet in integer format (refer 3GPP TS 24.008 [8] subclause 10.5.4.8)

<alpha>: optional string type alphanumeric representation of <number> corresponding to the entry found in phonebook; used character set should be the one selected with command Select TE Character Set +CSCS

<CLI_validity>: integer type. This parameter can provide details why <number> does not contain a calling party BCD number (refer 3GPP TS 24.008 [8] subclause 10.5.4.30).

0 CLI valid

1 CLI has been withheld by the originator (refer 3GPP TS 24.008 [8] table 10.5.135a/3GPP TS 24.008 code "Reject by user")

2 CLI is not available due to interworking problems or limitations of originating network (refer 3GPP TS 24.008 [8] table 10.5.135a/3GPP TS 24.008 code "Interaction with other service")

3 CLI is not available due to calling party being of type payphone (refer 3GPP TS 24.008 [8] table 10.5.135a/3GPP TS 24.008 code "Coin line/payphone")

4 CLI is not available due to other reasons (refer 3GPP TS 24.008 [8] table 10.5.135a/3GPP TS 24.008 code "Unavailable").

When CLI is not available (<CLI_validity>=2, <CLI_validity>=3 or <CLI_validity>=4), <number> shall be an empty string ("") and <type> value will not be significant. Nevertheless, TA may return the recommended value 128 for <type> (TON/NPI unknown in accordance with 3GPP TS 24.008 [8] subclause 10.5.4.7).

When CLI has been withheld by the originator, (<CLI_validity>=1) and the CLIP is provisioned with the "override category" option (refer 3GPP TS 22.081 [3] and 3GPP TS 23.081 [40]), <number> and <type> is provided. Otherwise, TA shall return the same setting for <number> and <type> as if the CLI was not available.

Implementation

Optional.

7.7 Calling line identification restriction +CLIR

Table 40: +CLIR parameter command syntax

Command	Possible response(s)
+CLIR=[<n>]	
+CLIR?	+CLIR: <n>,<m>
+CLIR=?	+CLIR: (list of supported <n>s)

Description

This command refers to the supplementary service CLIR (Calling Line Identification Restriction) according to 3GPP TS 22.081 [3] and OIR (Originating Identification Restriction) according to 3GPP TS 24.607 [119] that allows a calling subscriber to enable or disable the presentation of the calling line identity (CLI) to the called party when originating a call.

Set command overrides the CLIR / OIR subscription (default is restricted or allowed) when temporary mode is provisioned as a default adjustment for all following outgoing calls. This adjustment can be revoked by using the opposite command. If this command is used by a subscriber without provision of CLIR / OIR in permanent mode the network will act according to 3GPP TS 22.081 [3] and 3GPP TS 24.607 [119]).

Read command gives the default adjustment for all outgoing calls (given in <n>), and also triggers an interrogation of the provision status of the CLIR / OIR service (given in <m>).

Test command returns values supported as a compound value.

NOTE: On a per call basis CLIR / OIR functionality is explained in subclauses "ITU-T Recommendation V.250 [14] dial command D" and "Dial URI +CDU".

Defined values

<n>: integer type (parameter sets the adjustment for outgoing calls).

0 presentation indicator is used according to the subscription of the CLIR / OIR service.

1 CLIR / OIR invocation

2 CLIR / OIR suppression

<m>: integer type (parameter shows the subscriber CLIR / OIR service status in the network).

0 CLIR / OIR not provisioned

1 CLIR / OIR provisioned in permanent mode

2 unknown (e.g. no network, etc.)

3 CLIR / OIR temporary mode presentation restricted

4 CLIR / OIR temporary mode presentation allowed

Implementation

Optional.

7.8 Connected line identification presentation +COLP

Table 41: +COLP parameter command syntax

Command	Possible response(s)
+COLP=[<n>]	
+COLP?	+COLP: <n>,<m>
+COLP=?	+COLP: (list of supported <n>s)

Description

This command refers to the supplementary service COLP (Connected Line Identification Presentation) according to 3GPP TS 22.081 [3] and TIP (Terminating Identification Presentation) according to 3GPP TS 24.608 [120] that enables a calling subscriber to get the connected line identity (COL) of the called party after setting up a mobile originated call. The command enables or disables the presentation of the COL at the TE. It has no effect on the execution of the supplementary service COLR / TIR in the network.

When <n>=1, the presentation of the connected line identity at the TE enabled and when the called subscriber allows the intermediate result code, +COLP: <number>,<type>[,<subaddr>,<satype> [,<alpha>]] is returned from TA to TE before any +CR or ITU-T Recommendation V.250 [14] responses. It is manufacturer specific if this response is used when normal voice call is established. The intermediate result code +COLP does not support numbers of the SIP URI format.

NOTE: If the connected line identity is available in the TE after reception of the final response to the call setup, +COLP is not returned as an intermediate result code but as an unsolicited result code.

When <n>=0, the presentation of the connected line identity at the TE is disabled.

The connected line identity can also be reported in unsolicited result codes +CMCCSS<*x*> / +CMCCSSEND, enabled with +CMCCS=3 (see AT command "monitor of current calls +CMCCS"). The unsolicited result codes +CMCCSS<*x*> / +CMCCSSEND support numbers of the SIP URI format.

Read command gives the status of <n>, and also triggers an interrogation of the provision status of the COLP supplementary service according 3GPP TS 22.081 [3] and TIP supplementary service according to 3GPP TS 24.608 [120] (given in <m>).

Test command returns values supported as a compound value.

Defined values

<n>: integer type (parameter sets/shows the result code presentation status to the TE)

0 disable

1 enable

<m>: integer type (parameter shows the subscriber COLP service status in the network).

0 COLP / TIP not provisioned

1 COLP / TIP provisioned

2 unknown (e.g. no network, etc.)

<number>, <type>, <subaddr>, <satype>, <alpha>: refer +CLIP

Implementation

Optional.

7.9 Called line identification presentation +CDIP

Table 42: +CDIP parameter command syntax

Command	Possible response(s)
+CDIP=[<n>]	
+CDIP?	+CDIP: <n>,<m>
+CDIP=?	+CDIP: (list of supported <n>s)

Description

This command related to a network service that provides "multiple called numbers (called line identifications) service" to an MT. This command enables a called subscriber to get the called line identification of the called party when receiving a mobile terminated call. Set command enables or disables the presentation of the called line identifications at the TE.

When <n>=1, the presentation of the called line identification at the TE is enabled, the unsolicited result code +CDIP: <number>,<type>[,<subaddr>,<satype>] is returned after every RING (or +CRING: <type>; refer subclause "Cellular result codes +CRC") result code sent from TA to TE. It is manufacturer specific if this response is used when normal voice call is answered. The unsolicited result code +CDIP does not support numbers of the SIP URI format.

When <n>=0, the presentation of the called line identification at the TE is disabled.

The called line identification can also be reported in unsolicited result codes +CMCCSS<*x*> / +CMCCSSEND, enabled with +CMCCS=3 (see AT command "monitor of current calls +CMCCS"). The unsolicited result codes +CMCCSS<*x*> / +CMCCSSEND support numbers of the SIP URI format.

Read command gives the status of <n>, and also triggers an interrogation of the provision status of the "multiple called numbers" service.

Test command returns values supported as a compound value.

Defined values

<n>: integer type (parameter sets/shows the result code presentation status to the TE)

0 disable

1 enable

<m>: integer type (parameter shows the subscriber "multiple called numbers" service status in the network)

0 "multiple called numbers service" is not provisioned

1 "multiple called numbers service" is provisioned

2 unknown (e.g. no network, etc.)

<number>: string type phone number of format specified by <type>

<type>: type of address octet in integer format (refer 3GPP TS 24.008 [8] subclause 10.5.4.7)

<subaddr>: string type subaddress of format specified by <satype>

<satype>: type of subaddress octet in integer format (refer 3GPP TS 24.008 [8] subclause 10.5.4.8)

Implementation

Optional.

7.10 Closed user group +CCUG

Table 43: +CCUG parameter command syntax

Command	Possible response(s)
+CCUG=[<n>[,<index>[,<info>]]]	
+CCUG?	+CCUG: <n>,<index>,<info>
+CCUG=?	

Description

This command allows control of the Closed User Group supplementary service (refer 3GPP TS 22.085 [21]). Set command enables the served subscriber to select a CUG index, to suppress the Outgoing Access (OA), and to suppress the preferential CUG.

Set command with <n>=1 enables to control the CUG information on the air interface as a default adjustment for all following outgoing calls. The interaction of this command with other commands based on other GSM/UMTS supplementary services is described in the GSM/UMTS standard.

NOTE: On a per call basis CUG functionality is explained in subclause "ITU-T Recommendation V.250 [14] dial command D".

Defined values

<n>: integer type

0 disable CUG temporary mode

1 enable CUG temporary mode

<index>: integer type

0...9 CUG index

10 no index (preferred CUG taken from subscriber data)

<info>: integer type

0 no information

1 suppress OA

2 suppress preferential CUG

3 suppress OA and preferential CUG

Implementation

Optional. This command is superfluous when the command +CECUG is supported.

7.11 Call forwarding number and conditions +CCFC

Table 44: +CCFC action command syntax

Command	Possible response(s)
+CCFC=<reason>,<mode>[,<number>[,<type>[,<class>[,<subaddr>[,<satype>[,<time>]]]]]]	*+CME ERROR: <err>* **when <mode>=2 and command successful:** +CCFC: <status>,<class1>[,<number>,<type>[,<subaddr>,<satype>[,<time>]]] [<CR><LF>+CCFC: <status>,<class2>[,<number>,<type>[,<subaddr>,<satype>[,<time>]]] [...]]
+CCFC=?	+CCFC: (list of supported <reason>s)

Description

This command allows control of the call forwarding supplementary service according to 3GPP TS 22.082 [4]. Registration, erasure, activation, deactivation, and status query are supported. When querying the status of a network service (<mode>=2) the response line for 'not active' case (<status>=0) should be returned only if service is not active for any <class>.

Test command returns reason values supported as a compound value.

NOTE: This command cannot be used with URIs. For communication forwarding control with URI support see AT command "call forwarding number and conditions with URI support +CCFCU".

Defined values

<reason>: integer type

0 unconditional

1 mobile busy

2 no reply

3 not reachable

4 all call forwarding (refer 3GPP TS 22.030 [19])

5 all conditional call forwarding (refer 3GPP TS 22.030 [19])

<mode>: integer type

0 disable

1 enable

2 query status

3 registration

4 erasure

<number>: string type phone number of forwarding address in format specified by <type>

<type>: type of address octet in integer format (refer 3GPP TS 24.008 [8] subclause 10.5.4.7); default 145 when dialling string includes international access code character "+", otherwise 129

<subaddr>: string type subaddress of format specified by <satype>

<satype>: type of subaddress octet in integer format (refer 3GPP TS 24.008 [8] subclause 10.5.4.8); default 128

<classx> is a sum of integers each representing a class of information (default 7 - voice, data and fax):

1 voice (telephony)

2 data (refers to all bearer services; with <mode>=2 this may refer only to some bearer service if TA does not support values 16, 32, 64 and 128)

4 fax (facsimile services)

8 short message service

16 data circuit sync

32 data circuit async

64 dedicated packet access

128 dedicated PAD access

<time>: integer type

1...30 when "no reply" is enabled or queried, this gives the time in seconds to wait before call is forwarded, default value 20

<status>: integer type

0 not active

1 active

Implementation

Mandatory for MT supporting AT commands only and not supporting the control through dial command D.

7.12 Call waiting +CCWA

Table 45: +CCWA parameter command syntax

Command	Possible response(s)
+CCWA=[<n>[,<mode>[,<class>]]]	*+CME ERROR: <err>* **when <mode>=2 and command successful** +CCWA: <status>,<class1> [<CR><LF>+CCWA: <status>,<class2> [...]]
+CCWA?	+CCWA: <n>
+CCWA=?	+CCWA: (list of supported <n>s)

Description

This command allows control of the supplementary service Call Waiting according to 3GPP TS 22.083 [5] and Communication Waiting according to 3GPP TS 24.607 [137]. Activation, deactivation and status query are supported. When querying the status of a network service (<mode>=2) the response line for 'not active' case (<status>=0) should be returned only if service is not active for any <class>.

Parameter <n> is used to disable/enable the presentation of an unsolicited result code +CCWA: <number>,<type>,<class>,[<alpha>][,<CLI_validity>[,<subaddr>,<satype>[,<priority>]]] to the TE when call waiting service is enabled. The unsolicited result code +CCWA does not support numbers of the SIP URI format.

The call waiting information can also be reported in unsolicited result codes +CMCCSS<*x*> / +CMCCSSEND, enabled with +CMCCS=3 (see AT command "monitor of current calls +CMCCS"). The unsolicited result codes +CMCCSS<*x*> / +CMCCSSEND support numbers of the SIP URI format.

Command should be abortable when network is interrogated.

Test command returns values supported as a compound value.

Defined values

<n>: integer type (sets/shows the result code presentation status to the TE)

0 disable

1 enable

<mode>: integer type (when <mode> parameter is not given, network is not interrogated)

0 disable

1 enable

2 query status

<class*x*>: is a sum of integers each representing a class of information (default 7 - voice, data and fax)

1 voice (telephony)

2 data (refers to all bearer services; with <mode>=2 this may refer only to some bearer service if TA does not support values 16, 32, 64 and 128)

4 fax (facsimile services)

8 short message service

16 data circuit sync

32 data circuit async

64 dedicated packet access

128 dedicated PAD access

<status>: integer type

0 not active

1 active

<number>: string type phone number of calling address in format specified by <type>

<type>: type of address octet in integer format (refer 3GPP TS 24.008 [8] subclause 10.5.4.7)

<alpha>: optional string type alphanumeric representation of <number> corresponding to the entry found in phonebook; used character set should be the one selected with command Select TE Character Set +CSCS

<CLI_validity>: integer type. This parameter can provide details why <number> does not contain a calling party BCD number (refer 3GPP TS 24.008 [8] subclause 10.5.4.30).

0 CLI valid

1 CLI has been withheld by the originator (refer 3GPP TS 24.008 [8] table 10.5.135a/3GPP TS 24.008 code "Reject by user")

2 CLI is not available due to interworking problems or limitations of originating network (refer 3GPP TS 24.008 [8] table 10.5.135a/3GPP TS 24.008 code "Interaction with other service")

3 CLI is not available due to calling party being of type payphone (refer 3GPP TS 24.008 [8] table 10.5.135a/3GPP TS 24.008 code "Coin line/payphone")

4 CLI is not available due to other reasons (refer 3GPP TS 24.008 [8] table 10.5.135a/3GPP TS 24.008 code "Unavailable")

When CLI is not available (<CLI_validity>=2, <CLI_validity>=3 or <CLI_validity>=4), <number> shall be an empty string ("") and <type> value will not be significant. Nevertheless, TA may return the recommended value 128 for <type> ((TON/NPI unknown in accordance with 3GPP TS 24.008 [8] subclause 10.5.4.7).

When CLI has been withheld by the originator, (<CLI_validity>=1) and the CLIP is provisioned with the "override category" option (refer 3GPP TS 22.081 [3] and 3GPP TS 23.081 [40]), <number> and <type> is provided. Otherwise, TA shall return the same setting for <number> and <type> as if the CLI was not available.

<subaddr>: string type subaddress of format specified by <satype>

<satype>: type of subaddress octet in integer format (refer 3GPP TS 24.008 [8] subclause 10.5.4.8)

<priority>: optional digit type parameter indicating that the eMLPP priority level of the incoming call. The priority level values are as defined in eMLPP specification 3GPP TS 22.067 [54].

Implementation

Optional.

7.13 Call related supplementary services +CHLD

Table 46: +CHLD action command syntax

Command	Possible response(s)
+CHLD=<n>	*+CME ERROR: <err>*
+CHLD=?	+CHLD: (list of supported <n>s)

Description

This command allows the control of the following call related services:

- a call can be temporarily disconnected from the MT but the connection is retained by the network;
- multiparty conversation (conference calls);
- the served subscriber who has two calls (one held and the other either active or alerting) can connect the other parties and release the served subscriber's own connection.

Calls can be put on hold, recovered, released, added to conversation, and transferred similarly as defined in 3GPP TS 22.030 [19]. Refer subclause 9.2 for possible <err> values.

This is based on the supplementary services HOLD (Call Hold; refer 3GPP TS 22.083 [5] clause 2 and 3GPP TS 24.610 [135]), MPTY / CONF (MultiParty; refer 3GPP TS 22.084 [22] and Conference; refer 3GPP TS 24.605 [133]) and ECT (Explicit Call Transfer; refer 3GPP TS 22.091 [30] and 3GPP TS 24.629 [139]).

NOTE 1: In the CS-domain, Call Hold, MultiParty and Explicit Call Transfer are only applicable to teleservice 11.

Test command returns a list of operations which are supported. The call number required by some operations shall be denoted by "x" (e.g. `+CHLD: (0,1,1x,2,2x,3)`).

Defined values

`<n>`: integer type; equals to numbers entered before SEND button in 3GPP TS 22.030 [19] subclause 6.5.5.1

NOTE 2: The "directory number" case shall be handled with dial command `D`, and the END case with hangup command `H` (or `+CHUP`). The 4*"directory number" case is handled with `+CTFR` command.

Implementation

Optional.

7.14 Call deflection +CTFR

Table 47: +CTFR action command syntax

Command	Possible response(s)
`+CTFR=<number>[,<type>[,<subaddr>[,<satype>]]]`	*`+CME ERROR: <err>`*
`+CTFR=?`	

Description

This refers to a service that causes an incoming alerting call to be forwarded to a specified number. Action command does this. Refer subclause 9.2 for possible `<err>` values.

This is based on the GSM/UMTS supplementary service CD (Call Deflection; refer 3GPP TS 22.072 [31]). The interaction of this command with other commands based on other GSM/UMTS supplementary services is described in the GSM/UMTS standards.

NOTE 1: Call Deflection is only applicable to teleservice 11.

NOTE 2: This command cannot be used with URIs. For communication forwarding control with URI support see AT command "call forwarding number and conditions with URI support +CCFCU".

Defined values

`<number>`: string type phone number of format specified by `<type>`

`<type>`: type of address octet in integer format (refer 3GPP TS 24.008 [8] subclause 10.5.4.7); default 145 when dialling string includes international access code character "+", otherwise 129

`<subaddr>`: string type subaddress of format specified by `<satype>`

`<satype>`: type of subaddress octet in integer format (refer 3GPP TS 24.008 [8] subclause 10.5.4.8); default 128

Implementation

Optional.

7.15 Unstructured supplementary service data +CUSD

Table 48: +CUSD parameter command syntax

Command	Possible response(s)
`+CUSD=[<n>[,<str>[,<dcs>]]]`	*`+CME ERROR: <err>`*
`+CUSD?`	`+CUSD: <n>`
`+CUSD=?`	`+CUSD: (`list of supported `<n>`s`)`

Description

This command allows control of the Unstuctured Supplementary Service Data (USSD) according to 3GPP TS 22.090 [23]. Both network and mobile initiated operations are supported. Parameter <n> is used to disable/enable the presentation of an unsolicited result code. The value <n>=2 is used to cancel an ongoing USSD session. For an USSD response from the network, or a network initiated operation, the format is:
+CUSD: <m>[,<str>,<dcs>].

When <str> is given, a mobile initiated USSD-string or a response USSD-string to a network initiated operation is sent to the network. The response USSD-string from the network is returned in a subsequent unsolicited +CUSD result code.

NOTE: In case of successful mobile initiated operation, TA implemented according to a version prior to 6 of this standard, waits the USSD response from the network and sends it to the TE before the final result code. This will block the AT command interface for the period of the operation. Such TA does not support <n> value 2.

The interaction of this command with other commands based on other GSM/UMTS supplementary services is described in the GSM/UMTS standards.

Test command returns values supported as a compound value.

Defined values

<n>: integer type (sets/shows the result code presentation status to the TE)

0 disable the result code presentation to the TE

1 enable the result code presentation to the TE

2 cancel session (not applicable to read command response)

<str>: string type USSD-string (when <str> parameter is not given, network is not interrogated):

- if <dcs> indicates that 3GPP TS 23.038 [25] 7 bit default alphabet is used:
  - if TE character set other than "HEX" (refer command Select TE Character Set +CSCS): MT/TA converts GSM alphabet into current TE character set according to rules of 3GPP TS 27.005 [24] Annex A
  - if TE character set is "HEX": MT/TA converts each 7-bit character of GSM alphabet into two IRA character long hexadecimal number (e.g. character Π (GSM 23) is presented as 17 (IRA 49 and 55))
- if <dcs> indicates that 8-bit data coding scheme is used: MT/TA converts each 8-bit octet into two IRA character long hexadecimal number (e.g. octet with integer value 42 is presented to TE as two characters 2A (IRA 50 and 65))
- if <dcs> indicates that 16-bit data coding scheme (UCS2) is used: MT/TA splits the 16 bits into two 8-bit octets. Each of those octets are converted as per the 8-bit data coding scheme, with the most significant octet first (e.g. decimal value 4906 is presented to TE as four characters 132A (IRA 49, 51, 50 and 65))

<dcs>: integer type (shows Cell Broadcast Data Coding Scheme, see 3GPP TS 23.038 [25]). Default value is 0.

<m>: integer type (shows the USSD response from the network or the network initiated operation)

0 no further user action required (network initiated USSD-Notify, or no further information needed after mobile initiated operation)

1 further user action required (network initiated USSD-Request, or further information needed after mobile initiated operation)

2 USSD terminated by network

3 other local client has responded

4 operation not supported

5 network time out

Implementation

Optional.

7.16 Advice of charge +CAOC

Table 49: +CAOC parameter command syntax

Command	Possible response(s)
+CAOC[=<mode>]	[+CAOC: <ccm>] *+CME ERROR: <err>*
+CAOC?	+CAOC: <mode>
+CAOC=?	+CAOC: (list of supported <mode>s)

Description

This refers to Advice of Charge supplementary service (3GPP TS 22.024 [26] and 3GPP TS 22.086 [27]) that enables subscriber to get information about the cost of calls. With <mode>=0, the execute command returns the current call meter value from the MT.

The command also includes the possibility to enable/disable reporting of the CCM information with unsolicited result code +CCCM: <ccm>. When enabled, this unsolicited result code is sent when the CCM value changes, but not more frequently than at every 10 seconds.

Refer subclause 9.2 for possible <err> values.

NOTE: Advice of Charge values stored in the SIM card or in the active application in the UICC (GSM or USIM) (ACM, ACMmax, PUCT) can be accessed with generic or restricted SIM access command (+CSIM or +CRSM)).Those values can be more readily accessed with commands +CACM, +CAMM and +CPUC.

The Read command indicates whether the unsolicited reporting is activated or not.Test command returns the supported mode values as a compound value.

Defined values

<mode>: integer type

0 query CCM value

1 deactivate the unsolicited reporting of CCM value

2 activate the unsolicited reporting of CCM value

<ccm>: string type; three bytes of the current call meter value in hexadecimal format (e.g. "00001E" indicates decimal value 30); value is in home units and bytes are similarly coded as ACMmax value in the SIM card or in the active application in the UICC (GSM or USIM)

Implementation

Optional.

7.17 Supplementary service notifications +CSSN

Table 50: +CSSN parameter command syntax

Command	Possible response(s)
+CSSN=[<n>[,<m>]]	
+CSSN?	+CSSN: <n>,<m>
+CSSN=?	+CSSN: (list of supported <n>s),(list of supported <m>s)

Description

This command refers to supplementary service related network initiated notifications. The set command enables/disables the presentation of notification result codes from TA to TE.

When <n>=1 and a supplementary service notification is received after a mobile originated call setup, intermediate result code +CSSI: <code1>[,[<index>][,<SS_code>]] is sent to TE before any other MO call setup result codes presented in the present document or in ITU-T Recommendation V.250 [14]. When several different <code1>s are received from the network, each of them shall have its own +CSSI result code.

NOTE: If the supplemenary service notification is available in the TE after reception of the final response to the call setup, +CSSI is not returned as an intermediate result code but as an unsolicited result code.When <m>=1 and a supplementary service notification is received during a mobile terminated call setup or during a call, or when a forward check supplementary service notification is received, unsolicited result code +CSSU: <code2>[,<index>[,[<number>],[<type>][,[<subaddr>],[<satype>]][,<SS_code>]]] is sent to TE. In case of MT call setup, result code is sent after every +CLIP result code (refer command "Calling line identification presentation +CLIP") and when several different <code2>s are received from the network, each of them shall have its own +CSSU result code. <code2>=5 does not reflect any supplementary service, and the parameter <SS_code> will not be provided.

The supplementary service notification can also be reported in unsolicited result codes +CMCCSS<*x*> / +CMCCSSEND, enabled with +CMCCS=3 (see AT command "monitor of current calls +CMCCS"). The unsolicited result codes +CMCCSS<*x*> / +CMCCSSEND support numbers of the SIP URI format.

Test command returns values supported as a compound value.

Defined values

<n>: integer type (parameter sets/shows the +CSSI intermediate result code presentation status to the TE)

0 disable

1 enable

<m>: integer type (parameter sets/shows the +CSSU unsolicited result code presentation status to the TE)

0 disable

1 enable

<code1>: integer type (it is manufacturer specific, which of these codes are supported)

0 unconditional call forwarding is active

1 some of the conditional call forwardings are active

2 call has been forwarded

3 call is waiting

4 this is a CUG call (also <index> present)

5 outgoing calls are barred

6 incoming calls are barred

7 CLIR suppression rejected

8 call has been deflected

<index>: integer type (refer Closed user group +CCUG command)

<SS_code>: integer type used to present the code identifying a single supplementary service (see 3GPP TS 24.080 [109] and 3GPP TS 29.002 [110] subclause 17.7.5)

<code2>: integer type (it is manufacturer specific, which of these codes are supported)

0 this is a forwarded call (MT call setup)

1 this is a CUG call (also <index> present) (MT call setup)

2 call has been put on hold (during a voice call)

3 call has been retrieved (during a voice call)

4 multiparty call entered (during a voice call)

5 call on hold has been released (this is not a SS notification) (during a voice call)

6 forward check SS message received (can be received whenever)

7 call is being connected (alerting) with the remote party in alerting state in explicit call transfer operation (during a voice call)

8 call has been connected with the other remote party in explicit call transfer operation (also number and subaddress parameters may be present) (during a voice call or MT call setup)

9 this is a deflected call (MT call setup)

10 additional incoming call forwarded

<number>: string type phone number of format specified by <type>

<type>: type of address octet in integer format (refer 3GPP TS 24.008 [8] subclause 10.5.4.7)

<subaddr>: string type subaddress of format specified by <satype>

<satype>: type of subaddress octet in integer format (refer 3GPP TS 24.008 [8] subclause 10.5.4.8)

Implementation

Optional.

7.18 List current calls +CLCC

Table 51:+CLCC action command syntax

Command	Possible response(s)
+CLCC	[+CLCC: <ccid1>,<dir>,<stat>,<mode>,<mpty>[,<number>,<type>[,<alpha>[,<priority>[,<CLI validity>]]]] [<CR><LF>+CLCC: <ccid2>,<dir>,<stat>,<mode>,<mpty>[,<number>,<type>[,<alpha>[,<priority>[,<CLI validity>]]]] [...]]] *+CME ERROR: <err>*
+CLCC=?	

Description

Returns list of current calls of MT. If command succeeds but no calls are available, no information response is sent to TE. Refer subclause 9.2 for possible `<err>` values. See also AT command `+CLCCS`.

Defined values

`<ccid*x*>`: integer type. Call identification number as described in 3GPP TS 22.030 [19] subclause 6.5.5.1. This number can be used in `+CHLD` command operations. Value range is from 1 to N. N, the maximum number of simultaneous call control processes is implementation specific.

`<dir>`: integer type

0 mobile originated (MO) call

1 mobile terminated (MT) call

`<stat>`: integer type (state of the call)

0 active

1 held

2 dialing (MO call)

3 alerting (MO call)

4 incoming (MT call)

5 waiting (MT call)

`<mode>`: integer type (bearer/teleservice)

0 voice

1 data

2 fax

3 voice followed by data, voice mode

4 alternating voice/data, voice mode

5 alternating voice/fax, voice mode

6 voice followed by data, data mode

7 alternating voice/data, data mode

8 alternating voice/fax, fax mode

9 unknown

`<mpty>`: integer type

0 call is not one of multiparty (conference) call parties

1 call is one of multiparty (conference) call parties

`<number>`: string type phone number in format specified by `<type>`.

`<type>`: type of address octet in integer format (refer 3GPP TS 24.008 [8] subclause 10.5.4.7).

`<alpha>`: string type alphanumeric representation of `<number>` corresponding to the entry found in phonebook; used character set should be the one selected with command Select TE Character Set `+CSCS`.

`<priority>`: integer type parameter indicating the eMLPP priority level of the call, values specified in 3GPP TS 22.067 [54].

<CLI validity>: integer type. This parameter can provide details why <number> does not contain a calling party BCD number (refer 3GPP TS 24.008 [8] subclause 10.5.4.30). The parameter is not present for MO call types.

0 CLI valid

1 CLI has been withheld by the originator (refer 3GPP TS 24.008 [8] table 10.5.135a/3GPP TS 24.008 code "Reject by user")

2 CLI is not available due to interworking problems or limitations of originating network (refer 3GPP TS 24.008 [8] table 10.5.135a/3GPP TS 24.008 code "Interaction with other service")

3 CLI is not available due to calling party being of type payphone (refer 3GPP TS 24.008 [8] table 10.5.135a/3GPP TS 24.008 code "Coin line/payphone")

4 CLI is not available due to other reasons (refer 3GPP TS 24.008 [8] table 10.5.135a/3GPP TS 24.008 code "Unavailable")

When CLI is not available (<CLI validity>=2, <CLI validity>=3 or <CLI validity>=4), <number> shall be an empty string ("") and <type> value will not be significant. Nevertheless, TA may return the recommended value 128 for <type> (TON/NPI unknown in accordance with 3GPP TS 24.008 [8] subclause 10.5.4.7).

When CLI has been withheld by the originator, (<CLI validity>=1) and the CLIP is provisioned with the "override category" option (refer 3GPP TS 22.081 [3] and 3GPP TS 23.081 [40]), <number> and <type> is provided. Otherwise, TA shall return the same setting for <number> and <type> as if the CLI was not available.

Implementation

Optional. Recommended when +CHLD command is implemented.

When +CDU is supported and SIP URIs are used in the MT, the AT command +CLCC is fully replaced by +CLCCS.

7.19 Preferred PLMN list +CPOL

Table 52:+CPOL parameter command syntax

Command	Possible response(s)
+CPOL=[<index>][,<format>[,<oper>[,<GSM_AcT>,<GSM_Compact_AcT>,<UTRAN_AcT>,<E-UTRAN_AcT>]]]	*+CME ERROR: <err>*
+CPOL?	+CPOL: <index1>,<format>,<oper1>[,<GSM_AcT1>,<GSM_Compact_AcT1>,<UTRAN_AcT1>,<E-UTRAN_AcT1>] [<CR><LF>+CPOL: <index2>,<format>,<oper2>[,<GSM_AcT2>,<GSM_Compact_AcT2>,<UTRAN_AcT2>,<E-UTRAN_AcT2>] [...]] *+CME ERROR: <err>*
+CPOL=?	+CPOL: (list of supported <index>s),(list of supported <format>s) *+CME ERROR: <err>*

Description

This command is used to edit the PLMN selector with Access Technology lists in the SIM card or active application in the UICC (GSM or USIM).

Execute command writes an entry in the SIM/USIM list of preferred PLMNs, previously selected by the command +CPLS. If no list has been previously selected, the User controlled PLMN selector with Access Technology, $EF_{PLMNwAcT}$, is the one accessed by default. If <index> is given but <oper> is left out, entry is deleted. If <oper> is given but <index> is left out, <oper> is put in the next free location. If only <format> is given, the format of the <oper> in the read command is changed. The Access Technology selection parameters, <GSM_AcT>, <GSM_Compact_AcT> and <UTRAN_AcT> and <E-UTRAN_AcT> are required when writing User controlled PLMN selector with Access Technology, $EF_{PLMNwAcT}$, Operator controlled PLMN selector with Access Technology $EF_{OPLMNwAcT}$ and HPLMN selector with Access Technology $EF_{HPLMNwAcT}$, see 3GPP TS 31.102 [59]. Refer subclause 9.2 for possible <err> values.

NOTE 1: MT can also update the User controlled PLMN selector with Access Technology, $EF_{PLMNwAcT}$, automatically when new networks are selected.

NOTE 2: The Operator controlled PLMN selector with Access Technology $EF_{OPLMNwAcT}$, can only be written if the write access condition in the SIM/USIM has been previously verified.

Read command returns all used entries from the SIM/USIM list of preferred PLMNs, previously selected by the command +CPLS, with the Access Technologies for each PLMN in the list.

Test command returns the whole index range supported by the SIM.

Defined values

<index*n*>: integer type; the order number of operator in the SIM/USIM preferred operator list

<format>: integer type

0 long format alphanumeric <oper>

1 short format alphanumeric <oper>

2 numeric <oper>

<oper*n*>: string type; <format> indicates if the format is alphanumeric or numeric (see +COPS)

<GSM_AcT*n*>: integer type; GSM access technology:

0 access technology not selected

1 access technology selected

<GSM_Compact_AcT*n*>: integer type; GSM compact access technology

0 access technology not selected

1 access technology selected

<UTRAN_AcT*n*>: integer type; UTRAN access technology

0 access technology not selected

1 access technology selected

<E-UTRAN_AcT*n*>: integer type; E-UTRAN access technology

0 access technology not selected

1 access technology selected

Implementation

Optional.

7.20 Selection of preferred PLMN list +CPLS

Table 53:+CPLS parameter command syntax

Command	Possible response(s)
+CPLS=[<list>]	*+CME ERROR: <err>*
+CPLS?	+CPLS: <list> *+CME ERROR: <err>*
+CPLS=?	+CPLS: (list of supported <list>s) *+CME ERROR: <err>*

Description

This command is used to select one PLMN selector with Access Technology list in the SIM card or active application in the UICC (GSM or USIM), that is used by +CPOL command.

Execute command selects a list in the SIM/USIM. Refer subclause 9.2 for possible <err> values.

Read command returns the selected PLMN selector list from the SIM/USIM

Test command returns the whole index range supported lists by the SIM/USIM

Defined values

<list>: integer type

0 User controlled PLMN selector with Access Technology $EF_{PLMNwAcT}$, if not found in the SIM/UICC then PLMN preferred list $EF_{PLMNsel}$ (this file is only available in SIM card or GSM application selected in UICC)

1 Operator controlled PLMN selector with Access Technology $EF_{OPLMNwAcT}$

2 HPLMN selector with Access Technology $EF_{HPLMNwAcT}$

Implementation

Optional.

7.21 Read operator names +COPN

Table 54:+COPN action command syntax

Command	Possible response(s)
+COPN	+COPN: <numeric1>,<alpha1> [<CR><LF>+COPN: <numeric2>,<alpha2> [...]] *+CME ERROR: <err>*
+COPN=?	

Description

Execute command returns the list of operator names from the MT. Each operator code <numeric*n*> that has an alphanumeric equivalent <alpha*n*> in the MT memory shall be returned. Refer subclause 9.2 for possible <err> values.

Defined values

<numeric*n*>: string type; operator in numeric format (see +COPS)

<alpha*n*>: string type; operator in long alphanumeric format (see +COPS)

Implementation

Optional.

7.22 eMLPP priority registration and interrogation +CAEMLPP

Table 55: +CAEMLPP parameter command syntax

Command	Possible Response(s)
+CAEMLPP=<priority>	*+CME ERROR: <err>*
+CAEMLPP?	+CAEMLPP: <default_priority>,<max_priority> *+CME ERROR: <err>*
+CAEMLPP=?	

Description

The execute command is used to change the default priority level of the user in the network. The requested priority level is checked against the eMLPP subscription of the user stored on the SIM card or in the active application in the UICC (GSM or USIM) EF_{eMLPP}. If the user doesn't have subscription for the requested priority level an ERROR or +CMEE ERROR result code is returned.

The read command triggers an interrogation of the provision of the maximum priority level which the service subscriber is allowed to use and default priority level activated by the user.

If the service is not provisioned, a result code including the SS-Status (?) parameter is returned.

Defined Values

<priority>: integer type parameter which identifies the default priority level to be activated in the network, values specified in 3GPP TS 22.067 [54]

<default_priority>: integer type parameter which identifies the default priority level which is activated in the network, values specified in 3GPP TS 22.067 [54]

<max_priority>: integer type parameter which identifies the maximum priority level for which the service subscriber has a subscription in the network, values specified in 3GPP TS 22.067 [54]

Implementation

Mandatory for a MT supporting AT commands only and supplemantery service eMLPP is implemented.

7.23 eMLPP subscriptions +CPPS

Table 56: +CPPS action command syntax

Command	Possible response(s)
+CPPS	[+CPPS: <priority>[,<priority> [...]]] *+CME ERROR: <err>*
+CPPS=?	

Description

This command returns all eMLPP priority subscriptions of the user stored on the SIM card or in the active application in the UICC (GSM or USIM) EF_{eMLPP}. If no explicit priority level subscription is stored on the SIM card or in the active application in the UICC (GSM or USIM) EF_{eMLPP} the result code OK is returned.

Defined values

<priority>: integer type, eMLPP subscription to priority level {0,1,..,4} as defined in 3GPP TS 22.067 [54].

Implementation

Mandatory for a MT supporting AT commands only and eMLPP is implemented.

7.24 Fast call setup conditions +CFCS

Table 57: +CFCS parameter command syntax

Command	Possible response(s)
+CFCS=<priority>,<status>	*+CME ERROR: <err>*
+CFCS?	[+CFCS: <priority>[,<priority> [...]]] *+CME ERROR: <err>*
+CFCS=?	+CFCS: (list of supported <priority>,<status>s)

Description

The set command is used to edit the status of the priority level for fast call set-up stored on the SIM card or in the active application in the UICC (GSM or USIM) EF_{eMLPP}. If the user has no subscription to the priority level status he wants to edit, an ERROR or +CME ERROR result code is returned.

The read command returns all enabled priority levels for fast call set-up stored on the SIM card or in the active application in the UICC (GSM or USIM) EF_{eMLPP}. If no priority level is enabled for fast call set-up, the result code OK is returned.

Test command returns the values supported by the UE.

Defined values

<priority>: integer type, eMLPP fast call set-up priority level {0,1,..,4} as defined in 3GPP TS 22.067 [54]

<status>: integer type

0 disable <priority> for fast call set-up

1 enable <priority> for fast call set-up

Implementation

Mandatory for a MT supporting AT commands only and eMLPP is implemented.

7.25 Automatic answer for eMLPP service +CAAP

Table 58: +CAAP parameter command syntax

Command	Possible response(s)
+CAAP=<priority>,<status>	*+CME ERROR: <err>*
+CAAP?	[+CAAP: <priority>[,<priority> [...]]] *+CME ERROR: <err>*
+CAAP=?	+CAAP: (list of supported <priority>,<status>s)

Description

The set command is used to edit the status of the priority level for automatic answering for eMLPP stored on the SIM card or in the active application in the UICC (GSM or USIM) EF_{AAeM}. If the user has no subscription to the priority level status he wants to edit, an ERROR or +CME ERROR result code is returned.

The read command returns all enabled priority levels for automatic answering for eMLPP stored on the SIM card or in the active application in the UICC (GSM or USIM) EF_{AAeM}. If no priority level is enabled for automatic answering for eMLPP, the result code OK is returned.

Test command returns the values supported by the UE.

Defined values

<priority>: eMLPP automatic answer priority level value {A,B,0,1,..,4} as defined in 3GPP TS 22.067 [54]

<status>: integer type

0 disable eMLPP <priority> for automatic answering

1 enable eMLPP <priority> for automatic answering

Implementation

Mandatory for a MT supporting AT commands only and eMLPP is implemented.

7.26 User to user signalling service 1 +CUUS1

Table 59: +CUUS1 parameter command syntax

Command	Possible response(s)
+CUUS1=[<n>[,<m>[,<message>[,<UUIE>[,<message>[,<UUIE>[,...]]]]]]]	*+CME ERROR: <err>*
+CUUS1?	+CUUS1: <n>,<m>[,<message>,<UUIE>[,<message>,<UUIE>[,...]]]
+CUUS1=?	+CUUS1: (list of supported <n>s),(list of supported <m>s),(list of supported <message>s),(list of supported <messageI>s),(list of supported <messageU>s)

Description

This command allows control of the User-to-User Signalling Supplementary Service 1 (UUS1) according to 3GPP TS 22.087 [58].

Parameters <message> and <UUIE> are used to activate/deactivate the implicit request of the User-to-User Signalling Supplementary Service 1.

When <message> and <UUIE> are both present the string specified in <UUIE> is included as the value part of the User-to-User Information Element (as defined in 3GPP TS 24.008 [8]) into all subsequent messages of type <message>. If parameter <message> is present but parameter <UUIE> is not present then the User-to-User Information Element shall not be present in subsequent messages of type <message>.

Parameters <n> and <m> are used to enable/disable the presentation of incoming User-to-User Information Elements.

When <n> = 1 and a User-to-User Information is received after a mobile originated call setup or after hanging up a call, intermediate result code +CUUS1I: <messageI>,<UUIE> is sent to the TE.

When <m> = 1 and a User-to-User Information is received during a mobile terminated call setup or during a remote party call hangup, unsolicited result code +CUUS1U: <messageU>,<UUIE> is sent to the TE.

Test command returns values supported as a compound value.

The interaction of this command with other commands based on other supplementary services is described in the 3G standard.

Defined values

<n>: integer type (parameter sets/shows the +CUUS1I result code presentation status in the TA)

0 disable.

1 enable.

<m>: integer type (parameter sets/shows the +CUUS1U result code presentation status in the TA)

0 disable.

1 enable.

<message>: integer type (type of message containing the outgoing User-to-User Information Element)

0 ANY

1 SETUP

2 ALERT

3 CONNECT

4 DISCONNECT

5 RELEASE

6 RELEASE_COMPLETE

<messageI>: integer type (type of message containing the intermediate User-to-User Information Element)

0 ANY

1 ALERT

2 PROGRESS

3 CONNECT (sent after +COLP if enabled)

4 RELEASE

<messageU>: integer type (type of message containing the unsollicited User-to-User Information Element)

0 ANY

1 SETUP (returned after +CLIP if presented, otherwise after every RING or +CRING)

2 DISCONNECT

3 RELEASE_COMPLETE

<UUIE>: the User-user Information Element (as defined in 3GPP TS 24.008 [8]) in hexadecimal character format (for hexadecimal format, refer +CSCS).

NOTE: If the TA does not distinguish the type of message containing the User-to-user Information Element, it can use the value for ANY message.

Implementation

Optional.

7.27 Preferred network indication +CPNET

Table 59A: +CPNET parameter command syntax

Command	Possible response(s)
+CPNET=[<Pref_net>]	
+CPNET?	+CPNET: <Pref_net>
+CPNET=?	+CPNET: (list of supported <Pref_net>s)

Description

This command indicates whether the terminal has preference <Pref_net> for GERAN/UTRAN/E-UTRAN or GAN, see 3GPP TS 44.318 [70].

Read command returns the current preference for GERAN/UTRAN/E-UTRAN or GAN.

Test command returns the parameter indicating preference <Pref_net> for GERAN/UTRAN/E-UTRAN or GAN.

Defined values

<Pref_net>: integer type; indicates the preference for GERAN/UTRAN/E-UTRAN or GAN.

0 GERAN/UTRAN/E-UTRAN shall be used. The terminal uses GERAN/UTRAN/E-UTRAN coverage only.

1 GAN shall be used. The terminal used GAN coverage only.

2 GERAN/UTRAN/E-UTRAN preferred. The terminal prefers to stay in GERAN/UTRAN/E-UTRAN rather than GAN.

3 GAN preferred. The terminal prefers to stay in GAN rather than GERAN/UTRAN/E-UTRAN.

NOTE: Usage of value 0 or 1 will prevent the terminal from changing between GERAN/UTRAN/E-UTRAN and GAN. E.g. setting <Pref_net> to 1 indicates that only GAN will be used, and prevents the terminal from using available GERAN/UTRAN/E-UTRAN coverage.

Implementation

Optional.

7.28 Preferred network status +CPNSTAT

Table 59B: +CPNSTAT parameter command syntax

Command	Possible response(s)
+CPNSTAT=[<n>]	
+CPNSTAT?	+CPNSTAT: <n>,<stat>
+CPNSTAT=?	+CPNSTAT: (list of supported <n>s)

Description

Set command controls the presentation of an unsolicited result code +CPNSTAT: <stat> when <n>=1 and there is a change in the preferred network indication status.

Read command returns the status of result code presentation <n> and an integer <stat> which shows whether the terminal is in GERAN/UTRAN/E-UTRAN or GAN, see 3GPP TS 44.318 [70].

NOTE: Further details about registration status are available using commands +CREG (see subclause 7.2), +CGREG (see subclause 10.1.19) and +CEREG (see subclause 10.1.21).

Test command returns the list of supported unsolicited result codes.

Defined values

<n>: integer type

0 disable preferred network indication unsolicited result code.

1 enable preferred network indication unsolicited result code +CPNSTAT: <stat>.

<stat>: integer type; preferred network indication status.

0 Requested network not available.

1 GERAN/UTRAN/E-UTRAN used.

2 GAN used.

Implementation

Optional.

7.29 Current packet switched bearer +CPSB

Table 59C: +CPSB parameter command syntax

Command	Possible response(s)
+CPSB=[<n>]	*+CME ERROR: <err>*
+CPSB?	+CPSB: <n>[,<cid>,<curr_bearer>] [<CR><LF>+CPSB: <n>,<cid>,<curr_bearer> [...]] *+CME ERROR: <err>*
+CPSB=?	+CPSB: (list of supported <n>s)

Description

Set command controls the presentation of an unsolicited result code +CPSB: <cid>,<curr_bearer> when <n>=1 and the <cid> corresponds to a PDP context in the PDP-ACTIVE state or to an EPS bearer context and there is a change in the current bearer due to the reception of a control or signalling message from the network as specified in 3GPP TS 44.060 [71], 3GPP TS 25.331 [74] or 3GPP TS 36.331 [86].

Read command returns the current status of unsolicited result code presentation <n>. The parameters <cid> and <curr_bearer> are returned for each defined context when <n>=1 for <cid>s that correspond to a PDP context in the PDP-ACTIVE state or to an EPS bearer context.

Test command returns the list of supported <n>s.

Defined values

<n>: integer type

0 disable the presentation of the unsolicited result code

1 enable the presentation of the unsolicited result code
+CPSB: <cid>,<curr_bearer>

<cid>: A numeric parameter which specifies a particular PDP context or EPS bearer context definition. The <cid> parameter is local to the TE-MT interface and identifies only those PDP or EPS bearer contexts which have been setup via AT command (see the +CGDCONT and +CGDSCONT commands).

<curr_bearer>: integer type; the current packet switched bearer which is established between the UE and network.

0 There is currently no packet switched bearer between the UE and the network (e.g. RAB is released in UMTS or the TBF is released in GSM). This would mean that there is no bearer associated to the PDP context referred to by the <cid> parameter and hence no data transfer is currently occuring on that particular PDP context. This result code covers the case where the PDP context is active but there is no bearer associated with it.

1 GPRS. (See 3GPP TS 44.060 [71] for definition of GPRS TBF Mode)

2 EGPRS. (See 3GPP TS 44.060 [71] for definition of EGPRS TBF Mode)

3 Non-HSUPA in uplink and non-HSDPA in downlink. (See NOTE 1 to NOTE 3)

4 HSUPA in uplink and non-HSDPA in downlink. (See NOTE 1 to NOTE 4)

5 Non-HSUPA in uplink and HSDPA in downlink. (See NOTE 1 to NOTE 4)

6 HSUPA in uplink and HSDPA in downlink. (See NOTE 1 to NOTE 4)

7 EPS (See NOTE 5)

NOTE 1: The term "non-HSDPA" means a non-HSDPA UMTS bearer. 3GPP TS 25.331 [74] specifies the criterion to be satisfied in order for a downlink UMTS RAB to be termed as HSDPA. If those criterion are not met, then the downlink UMTS RAB would be termed as "non-HSDPA" by this AT command.

NOTE 2: The term "non-HSUPA" means a non-HSUPA UMTS bearer. 3GPP TS 25.331 [74] specifies the criterion to be satisfied in order for an uplink UMTS RAB to be termed as HSUPA (or Enhanced uplink DCH). If those criterion are not met, then the uplink UMTS RAB would be termed as "non-HSUPA" by this AT command.

NOTE 3: The terms "non-HSDPA", "non-HSUPA" indicate R99 to pre- HSDPA or pre-HSUPA UMTS bearers. They do not imply GPRS or EGPRS bearers.

NOTE 4: See 3GPP TS 25.308 [72] for HSDPA and 3GPP TS 25.319 [73] for HSUPA.

NOTE 5: The term "EPS" means an EPS bearer (see 3GPP TS 36.331 [86]).

Implementation

Optional.

7.30 Calling name identification presentation +CNAP

Table 59D: +CNAP parameter command syntax

Command	Possible response(s)
+CNAP=[<n>]	
+CNAP?	+CNAP: <n>,<m>
+CNAP=?	+CNAP: (list of supported <n>s)

Description

This command refers to the supplementary service CNAP (Calling Name Presentation) according to 3GPP TS 22.096 [93] that enables a called subscriber to get a calling name indication (CNI) of the calling party when receiving a mobile terminated call. Set command enables or disables the presentation of the CNI at the TE. It has no effect on the execution of the supplementary service CNAP in the network.

When <n>=1, the presentation of the calling name indication at the TE is enabled and CNI is provided the unsolicited result code, +CNAP: <name>[,<CNI_validity>] is returned after every RING (or +CRING: <type>; refer subclause "Cellular result codes +CRC") result code sent from TA to TE. It is manufacturer specific if this response is used when normal voice call is answered.

The calling name indication can also be reported in unsolicited result codes +CMCCSS<*x*> / +CMCCSSEND, enabled with +CMCCS=3 (see AT command "monitor of current calls +CMCCS"). The unsolicited result codes +CMCCSS<*x*> / +CMCCSSEND support numbers of the SIP URI format.

Read command gives the status of <n>, and also triggers an interrogation of the provision status of the CNAP service according 3GPP TS 22.096 [93] (given in <m>).

Test command returns values supported as a compound value.

Defined values

<n>: integer type (parameter sets/shows the result code presentation status to the TE)

0 disable

1 enable

<m>: integer type (parameter shows the subscriber CNAP service status in the network)

0 CNAP not provisioned

1 CNAP provisioned

2 unknown (e.g. no network, etc.)

<name>: string type, up to 80 characters long string containing the calling name

<CNI_validity>: integer type

0 CNI valid

1 CNI has been withheld by the originator.

2 CNI is not available due to interworking problems or limitations of originating network.

When CNI is not available (<CNI_validity>=2), <name> shall be an empty string ("").

When CNI has been withheld by the originator, (<CNI_validity>=1) and the CNAP is provisioned with the "override category" option (refer 3GPP TS 22.096 [93] and 3GPP TS 23.096 [94]), <name> is provided. Otherwise, TA shall return the same setting for <name> as if the CNI was not available.

Implementation

Optional.

7.31 Connected line identification restriction status +COLR

Table 59E: +COLR action command syntax

Command	Possible response(s)
+COLR	+COLR: <m>
+COLR=?	

Description

This command refers to the supplementary service COLR (Connected Line Identification Restriction) according to 3GPP TS 22.081 [3] and supplementary service TIR (Terminating Identification Restriction) according to 3GPP TS 24.608 [120] that enables a called subscriber to restrict the possibility of presentation of connected line identity (COL) to the calling party after receiving a mobile terminated call. The command displays the status of the COL presentation in the network. It has no effect on the execution of the supplementary services COLR / TIR in the network.

The command triggers an interrogation of the activation status of the COLR supplementary service according to 3GPP TS 22.081 [3] and the TIR supplementary service according to 3GPP TS 24.608 [120] (given in <m>).

Activation, deactivation, registration and erasure of the supplementary service COLR / TIR are not applicable.

Defined values

<m>: integer type (parameter shows the subscriber COLR / TIR service status in the network).

0 COLR / TIR not provisioned

1 COLR / TIR provisioned

2 unknown (e.g. no network, etc.)

Implementation

Optional.

7.32 Service specific access control restriction status +CSSAC

Table 7.32-1: +CSSAC action command syntax

Command	Possible response(s)
+CSSAC	+CSSAC: <BFVoice>,<BFVideo>,<BTVoice>,<BTVideo>
+CSSAC=?	

Description

This command refers to SSAC (Service Specific Access Control) related information which is used by MMTEL application (see 3GPP TS 24.173 [87]). The command provides the current status of the parameters for SSAC, <BFVoice>, <BFVideo>, <BTVoice> and <BTVideo>. The AT command has no effect on the execution of SSAC.

Defined values

<BFVoice> integer type; parameter shows the barring factor for MMTEL voice. <BFVoice> is mapped to the BarringFactorForMMTEL-Voice as in table 7.32-2.

Table 7.32-2: Value of BFVoice and its interpretation by MMTEL application

<BFVoice>	BarringFactorForMMTEL-Voice as specified in 3GPP TS 24.173 [87]
0	0
1	0,05
2	0,1
3	0,15
4	0,2
5	0,25
6	0,3
7	0,4
8	0,5
9	0,6
10	0,7
11	0,75
12	0,8
13	0,85
14	0,9
15	0,95
16	1

<BFVideo> integer type; parameter shows the barring factor for MMTEL video. <BFVideo> is mapped to the BarringFactorForMMTEL-Video as in table 7.32-3.

Table 7.32-3: Value of BFVideo and its interpretation by MMTEL application

<BFVideo>	BarringFactorForMMTEL-Video as specified in 3GPP TS 24.173 [87]
0	0
1	0,05
2	0,1
3	0,15
4	0,2
5	0,25
6	0,3
7	0,4
8	0,5
9	0,6
10	0,7
11	0,75
12	0,8
13	0,85
14	0,9
15	0,95
16	1

<BTVoice> integer type; parameter shows the barring timer for MMTEL voice. <BTVoice> is mapped to the BarringTimeForMMTEL-Voice as in table 7.32-4.

Table 7.32-4: Value of BTVoice and its interpretation by MMTEL application

<BTVoice>	BarringTimeForMMTEL-Voice as specified in 3GPP TS 24.173 [87]

0	0
1	4
2	8
3	16
4	32
5	64
6	128
7	256
8	512

<BTVideo> integer type; parameter shows the barring timer for MMTEL video. <BTVideo> is mapped to the BarringTimeForMMTEL-Video as in table 7.32-5.

Table 7.32-5: Value of BTVideo and its interpretation by MMTEL application

<BTVideo>	BarringTimeForMMTEL-Video as specified in 3GPP TS 24.173 [87]
0	0
1	4
2	8
3	16
4	32
5	64
6	128
7	256
8	512

Implementation

Optional.

This command is not applicable to UTRAN or GERAN UEs.

7.33 Network emergency bearer services support +CNEM

Table 7.33-1: +CNEM parameter command syntax

Command	Possible response(s)
+CNEM=[<reporting>]	*+CME ERROR: <err>*
+CNEM?	+CNEM: <reporting>[,<emb_Iu_supp>,<emb_S1_supp>]
+CNEM=?	+CNEM: (list of supported <reporting>s)

Description

Set command enables reporting of changes in the emergency bearer services support indicators with the unsolicited result code +CNEMIU: <emb_Iu_supp> according to the network feature support information element, see 3GPP TS 24.008 [8] subclause 10.5.5.23 and the unsolicited result code +CNEMS1: <emb_S1_supp> according to the EPS network feature support information element, see 3GPP TS 24.301 [83] subclause 9.9.3.12A. Refer subclause 9.2 for possible <err> values.

Read command returns current command setting and if enabled, the settings of the emergency bearer services support indicator in Iu mode and the emergency bearer services support indicator in S1 mode for the network where the UE is attached.

Test command returns values supported as a compound value.

Defined values

<reporting>: integer type

0 Reporting not enabled

1 Reporting enabled

<emb_Iu_supp>: integer type. Emergency bearer services support indicator for Iu mode (See NOTE).

0 Emergency bearer services in Iu mode and A/Gb mode not supported

1 Emergency bearer services supported in Iu mode, but not supported in A/Gb mode

<emb_S1_supp>: integer type. Emergency bearer services support indicator for S1 mode (See NOTE).

0 Emergency bearer services in S1 mode not supported

1 Emergency bearer services in S1 mode supported

NOTE: The indicators <emb_Iu_supp> and <emb_S1_supp> are only set to supported when explicitly signalled from the network. When an emergency bearer services support indicator is not signalled from the network or if no network is available, this is interpreted as "Emergency bearer services not supported".

Implementation

Optional.

7.34 Enhanced closed user group +CECUG

Table 7.34-1: +CECUG parameter command syntax

Command	Possible response(s)
+CECUG=<n>,[<CUG_pointer>[,<CUG_index>,<CUG_info>]]	
+CECUG?	[+CECUG: <n>,<CUG_pointer>,<CUG_index>,<CUG_info> [<CR><LF>+CECUG: <n>,<CUG_pointer>,<CUG_index>,<CUG_info> [...]]]
+CECUG=?	+CECUG: (list of supported <n>s),(range of supported <CUG_pointer>s)

Description

This command allows control of the Closed User Group supplementary service (refer 3GPP TS 22.085 [21] and 3GPP TS 24.654 [121]). Set command enables the served subscriber to create a number of <CUG_pointer>s that each define a <CUG_index> and a <CUG_info> to define how the preferential CUG and the Outgoing Access (OA) is handled for outgoing calls.

Set command with <n>=0 disable settings in the MT and use the subscribed settings, while <n>=1 enables to control the CUG information on the air interface as adjustments for outgoing calls according to the settings defined by the parameters <CUG_pointer>s, <CUG_index> and <CUG_info>. For calls initated using the dial command D, the dial string modifiers 'G' or 'g' can not indicate a <CUG_pointer> and the <CUG_index> and <CUG_info> as defined for <CUG_pointer>=1 shall be used.

NOTE 1: On a per call basis CUG functionality is explained in the subclauses "ITU-T Recommendation V.250 [14] dial command D" and "Dial URI +CDU".

A special form of the set command, +CECUG=<n>,<CUG_pointer> causes the value of <CUG_index> and <CUG_info> for the CUG pointer <CUG_pointer> to become undefined. The set command, +CECUG=0 that can be used to disable the CUG temporary mode will not make previously defined CUG pointers and the corresponding defined <CUG_index> and <CUG_info> undefined.

The read command returns the current settings for each defined CUG pointer.

The test command returns values supported as compound values.

Defined values

<n>: integer type. This parameter sets CUG activation on a per call basis.

0 disable CUG temporary mode. All calls initiated using the dial command D or +CDU use the subscribed CUG settings. The parameters <CUG_index> and <CUG_info> are ignored at call initiation. For calls initated using the dial command D, the dial string modifiers 'G' or 'g' have no effect (see subclause "ITU T Recommendation V.250 [14] dial command D"). For calls initated using +CDU, the parameter <CUG_pointer> has no effect (see subclause "Dial URI +CDU").

1 enable CUG temporary mode. Values for <CUG_index> and <CUG_info> are applied for:

- all calls initiated using the dial command D where the dial modifier 'G' or 'g' (see subclause "ITU T Recommendation V.250 [14] dial command D") is present as part of the dial string.

- all calls initated using +CDU where parameter <CUG_pointer> is set to 1 (see subclause "Dial URI +CDU")

If 'G' or 'g' is not applied (for the dial command D) or <CUG_pointer> is set to 0 (for +CDU) <CUG_index> and <CUG_info> are ignored. In that case only the subscribed CUG settings apply.

<CUG_pointer>: integer type. A numeric parameter which specifies a particular set of CUG data. The <CUG_pointer> is local to the TE-MT interface and identifies a particular <CUG_index> and <CUG_info> which indicates per call basis changes provided to the supplementary service closed user group. The range of permitted values is from 1-n.The maximum value of n is implementation specific.

NOTE 2: 3GPP TS 22.085 [21] indicates that each individual subscriber can be a member of a maximum of 10 CUGs.

<CUG_index>: string type. The parameter sets the CUG index for this <CUG_pointer>.

"0" ... "32767"	CUG index
""	no CUG index, indicated by empty string. Preferential CUG taken from subscriber data.

<CUG_info>: integer type. The parameter sets the CUG information for this <CUG_pointer>.

0 no information

1 suppress OA

2 suppress preferential CUG

3 suppress OA and preferential CUG

Implementation

Optional. This command can replace the command +CCUG.

7.35 Communication forwarding number and conditions with URI support +CCFCU

Table 7.35-1: +CCFCU action command syntax

Command	Possible response(s)
+CCFCU=<reason>,<mode>[,<numbertype>,<ton>,<number>[,<class>,<ruleset>[,<subaddr>[,<satype>[,<time>]]]]]	*+CME ERROR: <err>* **when <mode>=2 and command successful:** +CCFCU: <status>,<class1>[,<numbertype>,<ton>,<number>[,<subaddr>,<satype>[,<time>]]] [<CR><LF>+CCFCU: <status>,<class2>[,<number>,<type>[,<subaddr>,<satype>[,<time>]]] [...]]
+CCFCU=?	+CCFCU: (list of supported <reason>s)

Description

The command allows control of the communication forwarding supplementary service according to 3GPP TS 22.072 [31], 3GPP TS 22.082 [4] and 3GPP TS 24.604 [132]. This command is an extended version of AT commands +CCFC and +CTFR which also supports numbers of the SIP URI format. Registration, erasure, activation, deactivation, and status query are supported. When querying the status of a network service (<mode>=2) the response line for 'not active' case (<status>=0) should be returned only if service is not active for any <class>.

If communication diversion notification is enabled by the command then the unsolicited result code +CCFCUN: <divnotification> will be provided to notify about diversions.

Test command returns reason values supported as a compound value.

Defined values

<reason>: integer type

0 communication forwarding unconditional – CFU, refer 3GPP TS 22.082 [4] and 3GPP TS 24.604 [132]

1 communication forwarding on busy user – CFB, refer 3GPP TS 22.082 [4] and 3GPP TS 24.604 [132]

2 communication forwarding on no reply – CFNR, refer 3GPP TS 22.082 [4] and 3GPP TS 24.604 [132]

3 communication forwarding on subscriber not reachable – CFNRc, refer 3GPP TS 22.082 [4] and 3GPP TS 24.604 [132]

4 all communication forwarding (refer 3GPP TS 22.030 [19])

5 all conditional communication forwarding (refer 3GPP TS 22.030 [19])

6 communication deflection – CD, refer 3GPP TS 22.072 [31] and 3GPP TS 24.604 [132]

7 communication forwarding on not logged-in – CFNL, refer 3GPP TS 24.604 [132]

8 communication diversion notification – CDIVN, refer 3GPP TS 24.604 [132]

<mode>: integer type

0 disable

1 enable

2 query status

3 registration

4 erasure

<numbertype>: integer type. Indicating type of information in parameter <number>.

0 No valid information in parameter <number>. <number> shall then be set to empty string ("").

1 Number in <number> according to URI including the prefix specifying the URI type (see command +CDU). Parameter <ton> has no relevant information and is set to zero.

2 Number in <number> according to one of the formats supported by 3GPP TS 24.008 [8] subclause 10.5.4.7)

<ton>: type of number in integer format (refer 3GPP TS 24.008 [8] subclause 10.5.4.7). The parameter is also set to zero when it has no meaningful content, e.g. when <numbertype>=1.

<number>: string type phone number in format specified by <numbertype>. The used character set should be the one selected with Select TE Character Set +CSCS. When no number is available, <number> shall be set to empty string ("").

<subaddr>: string type subaddress of format specified by <satype>

<satype>: type of subaddress octet in integer format (refer 3GPP TS 24.008 [8] subclause 10.5.4.8); default 128

<class*x*> is a sum of integers each representing a class of information (default 7 - voice, data and fax):

0 communication forwarding without differentiation on class of information

1 voice (telephony)

2 data (refers to all bearer services; with <mode>=2 this may refer only to some bearer service if TA does not support values 16, 32, 64 and 128)

4 fax (facsimile services)

8 short message service

16 data circuit sync

32 data circuit async

64 dedicated packet access

128 dedicated PAD access

<ruleset>: string type ruleset value of XML element of communication diversion XML document (refer 3GPP TS 24.604 [132]). If XML ruleset values are not supported or intended to be used, the parameter shall be set to an empty string ("").

<time>: integer type

1...30 when "no reply" is enabled or queried, this gives the time in seconds to wait before call is forwarded, default value 20

<status>: integer type

0 not active

1 active

<divnotification>: string type diversion notification XML document (refer 3GPP TS 24.604 [132]).

Implementation

Optional.

7.36 Informative examples

This subclause includes all the GSM/UMTS supplementary service related commands, additional commands to lock MT and SIM/UICC capabilities, and commands to check the network registration status.

An example where MSISDNs of a MT are queried, calls are forwarded to different numbers when mobile is busy (CFB) or when it does not answer (CFNRy). The status of CFNRy is read:

```
AT+CNUM
+CNUM: ,"+358501234567",145,,4          (voice number)
OK
AT+CCFC=1,1,"931123456"                 (enable CFB)
OK
AT+CCFC=2,1,"921654321"                 (enable CFNRy)
OK
AT+CCFC=1,2                        (query CFNRy)
+CCFC: 1,7,"+35821654321",145,,,20   (forward after 20 seconds)
OK
```

An example of Call Waiting (+CCWA), Call Related Supplementary Services (+CHLD), and Connected Line Identification Presentation (+COLP) usage:

```
AT+CCWA=1,1;+COLP=1            (enable call waiting and COLP result codes)
OK
ATD9311234567;                 (originate a voice call)
+COLP: "+358311234567",145
OK
...conversation...
+CCWA: "+358317654321",145     (another call is waiting)
AT+CHLD=2                      (put first call on hold and answer the second one)
OK
...conversation...
AT+CHLD=1                      (release the second (active) call and recover the first (held) call)
OK
ATH                            (release the first call)
OK
```

Call barring supplementary services are combined in one command, Facility Lock (+CLCK), which is also used to restrict MT and SIM/UICC functionality Some of the facilities require a password when enabled or disabled. An additional command, Change Password (+CPWD), is defined for changing the password of different barring and restriction facilities. An example where locking status of outgoing international calls is interrogated and then barred, and the password of the SIM/UICC card lock (Personal Identity Number, PIN) is changed:

```
AT+CLCK="OI",2
+CLCK: 0,7
OK
AT+CLCK="OI",1,"1234"
OK
AT+CPWD="SC","4321","1234"
OK
```

Operator Selection (+COPS) command is used for querying the status of all GSM/UMTS operators detected in the area, and switching between operators.

Following example illustrates a network selection sequence in Finland. Two operators are found, the status of Tele is unknown and Radiolinja is currently selected. Read command shows that automatic selection mode is on and that Radiolinja is selected. Then an attempt is made to access Tele, but it is denied (shown by +CME ERROR).

```
AT+COPS=?
+COPS: (2,"RADIOLINJA","RL","24405"),(0,"TELE","TELE","24491")
OK
AT+COPS?
+COPS: 0,0,"RADIOLINJA"
OK
AT+COPS=1,0,"TELE"
+CME ERROR: 3
```

When a terminal wanders between countries (i.e. networks), an application may follow this e.g. with the following scenario:

```
AT+CREG=1                      (enable +CREG: <stat> unsolicited result code)
```

```
OK
AT+CREG?
+CREG: 1,1                    (MT is registered in home PLMN)
OK
AT+COPS=3,2;+COPS?;+COPS=3,0;+COPS?
+COPS: 0,2,"24405"            (get the country...
+COPS: 0,0,"RADIOLINJA"         ...and operator name)
OK
...user wanders to another PLMN...
+CREG: 2                      (deregistered, roaming ongoing)
+CREG: 5                      (registered again, not home PLMN)
AT+COPS=3,2;+COPS?;+COPS=3,0;+COPS?
+COPS: 0,2,"24001"            (get the country...
+COPS: 0,0,"TELIA MOBITEL"      ...and operator name)
OK
...user loses connection, no other PLMNs around...
+CREG: 0
```

An example of eMLPP Supplementary Service usage for a ptp voice call:

```
ATD*752#+436644101453;        (originate a voice call with the priority level 2, see for priority level definitions GSM 02.30)
OK                            (call setup was successful)
```

8 Mobile termination control and status commands

8.0 General

This clause includes commands for MT power, keypad, touch screen, display and indicator handling. Also commands for selecting, reading and writing of phonebooks, and setting real-time clock facilities are specified. Two commands are specified for accessing SIM/UICC database records in a general way.

Figure 7 illustrates the effect of these commands. Command Phone Activity Status `+CPAS` indicates the current general activity status of the MT. Command Set Phone Functionality `+CFUN` is used to set the MT to different power consumption states. Command Enter PIN `+CPIN` is used to enter MT passwords which are needed before any other functionality of the MT can be used (e.g. SIM PIN, PUK). Commands Generic SIM Access `+CSIM` and Restricted SIM Access `+CRSM` can be used to access all data in SIM/UICC. Commands Battery Charge `+CBC` and Signal Quality `+CSQ` are same as in TIA IS-135 [16] and they are used to query the battery charge of the MT and the current RSSI of the MT. Command Mobile Termination Control Mode `+CMEC` is used to select the controlling unit of MT keypad, display touch screen, and indicators. Controlling commands for the TE are Keypad Emulation `+CKPD`, Display Control `+CDIS,` Touch Screen Emulation `+CTSA,` and Indicator Control `+CIND`. If corresponding event reporting is enabled with command Mobile Termination Event Reporting `+CMER`, `+CKEV` is the result code of a keypad event, `+CDEV` is the result code of a display event, `+CTEV` is the result code of a touch screen event, `+COEV` is the result code of a display orientation event, and `+CIEV` is the result code of an indicator event. Phonebook commands are Select Phonebook Memory Storage `+CPBS`, Read Phonebook Entries `+CPBR`, Find Phonebook Entries `+CPBF` and Write Phonebook Entry `+CPBW`. Additional command Clock `+CCLK` can be used to control the real-time clock of the MT if available. Command Alarm `+CALA` sets possible alarm clock facilities of the MT.

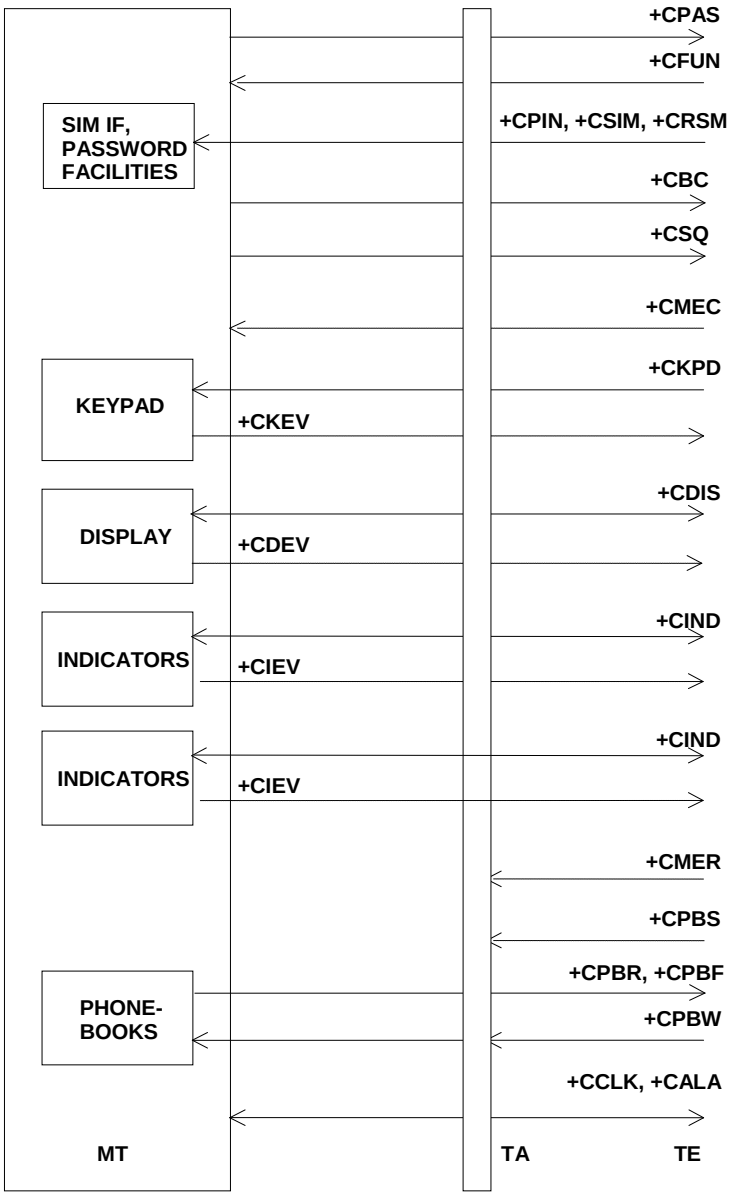

Figure 7: Mobile termination control and status commands

8.1 Phone activity status +CPAS

Table 60: +CPAS action command syntax

Command	Possible response(s)
+CPAS	+CPAS: <pas> *+CME ERROR: <err>*
+CPAS=?	+CPAS: (list of supported <pas>s) *+CME ERROR: <err>*

Description

Execution command returns the activity status <pas> of the MT. It can be used to interrogate the MT before requesting action from the phone. Refer subclause 9.2 for possible <err> values.

Test command returns values supported by the MT as a compound value.

Defined values

<pas>: integer type

0 ready (MT allows commands from TA/TE)

1 unavailable (MT does not allow commands from TA/TE)

2 unknown (MT is not guaranteed to respond to instructions)

3 ringing (MT is ready for commands from TA/TE, but the ringer is active)

4 call in progress (MT is ready for commands from TA/TE, but a call is in progress)

5 asleep (MT is unable to process commands from TA/TE because it is in a low functionality state)

all other values below 128 are reserved by the present document.

Implementation

Mandatory when MT can be operated from TE (refer subclause "Mobile Termination control mode +CMEC").

8.2 Set phone functionality +CFUN

Table 61: +CFUN parameter command syntax

Command	Possible response(s)
+CFUN=[<fun>[,<rst>]]	*+CME ERROR: <err>*
+CFUN?	+CFUN: <fun> *+CME ERROR: <err>*
+CFUN=?	+CFUN: (list of supported <fun>s),(list of supported <rst>s) *+CME ERROR: <err>*

Description

Set command selects the level of functionality <fun> in the MT. Level "full functionality" is where the highest level of power is drawn. "Minimum functionality" is where minimum power is drawn. Level of functionality between these may also be specified by manufacturers. When supported by manufacturers, MT resetting with <rst> parameter may be utilized. Refer subclause 9.2 for possible <err> values.

NOTE 1: It is manufacturer specific if this command affects network registration. Command Operator Selection +COPS is used to force registration/deregistration.

Test command returns values supported by the MT as a compound value.

Defined values

<fun>: integer type

0 minimum functionality

1 full functionality

2 disable phone transmit RF circuits only

3 disable phone receive RF circuits only

4 disable phone both transmit and receive RF circuits

5...127 reserved for manufacturers as intermediate states between full and minimum functionality

<rst>: integer type

0 do not reset the MT before setting it to <fun> power level

NOTE 2: This shall be always default when <rst> is not given.

1 reset the MT before setting it to <fun> power level

Implementation

Optional.

8.3 Enter PIN +CPIN

Table 62: +CPIN parameter command syntax

Command	Possible response(s)
+CPIN=<pin>[,<newpin>]	*+CME ERROR: <err>*
+CPIN?	+CPIN: <code> *+CME ERROR: <err>*
+CPIN=?	

Description

Set command sends to the MT a password which is necessary before it can be operated (SIM PIN, SIM PUK, PH-SIM PIN, etc.). If the PIN is to be entered twice, the TA shall automatically repeat the PIN. If no PIN request is pending, no action is taken towards MT and an error message, +CME ERROR, is returned to TE. Refer subclause 9.2 for possible <err> values.

NOTE 1: SIM PIN, SIM PUK, PH-SIM PIN, PH-FSIM PIN, PH-FSIM PUK, SIM PIN2 and SIM PUK2 refer to the PIN of the selected application on the UICC. For example, in an UTRAN context, the selected application on the currently selected UICC should be a USIM and the SIM PIN then represents the PIN of the selected USIM. See 3GPP TS 31.101 [65] for further details on application selection on the UICC.

If the PIN required is SIM PUK or SIM PUK2, the second pin is required. This second pin, <newpin>, is used to replace the old pin in the SIM.

NOTE 2: Commands which interact with MT that are accepted when MT is pending SIM PIN, SIM PUK, or PH-SIM are: +CGMI, +CGMM, +CGMR, +CGSN, D112; (emergency call), +CPAS, +CFUN, +CPIN, +CPINR, +CDIS (read and test command only), and +CIND (read and test command only).

Read command returns an alphanumeric string indicating whether some password is required or not.

Defined values

<pin>, <newpin>: string type values

<code> values reserved by the present document:

READY	MT is not pending for any password
SIM PIN	MT is waiting SIM PIN to be given
SIM PUK	MT is waiting SIM PUK to be given
PH-SIM PIN	MT is waiting phone-to-SIM card password to be given

PH-FSIM PIN	MT is waiting phone-to-very first SIM card password to be given
PH-FSIM PUK	MT is waiting phone-to-very first SIM card unblocking password to be given
SIM PIN2	MT is waiting SIM PIN2 to be given (this <code> is recommended to be returned only when the last executed command resulted in PIN2 authentication failure (i.e. +CME ERROR: 17); if PIN2 is not entered right after the failure, it is recommended that MT does not block its operation)
SIM PUK2	MT is waiting SIM PUK2 to be given (this <code> is recommended to be returned only when the last executed command resulted in PUK2 authentication failure (i.e. +CME ERROR: 18); if PUK2 and new PIN2 are not entered right after the failure, it is recommended that MT does not block its operation)
PH-NET PIN	MT is waiting network personalization password to be given
PH-NET PUK	MT is waiting network personalization unblocking password to be given
PH-NETSUB PIN	MT is waiting network subset personalization password to be given
PH-NETSUB PUK	MT is waiting network subset personalization unblocking password to be given
PH-SP PIN	MT is waiting service provider personalization password to be given
PH-SP PUK	MT is waiting service provider personalization unblocking password to be given
PH-CORP PIN	MT is waiting corporate personalization password to be given
PH-CORP PUK	MT is waiting corporate personalization unblocking password to be given

Implementation

Mandatory for MT not supporting the +CKPD command and supporting AT commands only.

8.4 Battery charge +CBC

Table 63: +CBC action command syntax

Command	Possible response(s)
+CBC	+CBC: <bcs>,<bcl> *+CME ERROR: <err>*
+CBC=?	+CBC: (list of supported <bcs>s),(list of supported <bcl>s)

Description

Execution command returns battery connection status <bcs> and battery charge level <bcl> of the MT. Refer subclause 9.2 for possible <err> values.

Test command returns values supported as compound values.

Defined values

<bcs>: integer type

0 MT is powered by the battery

1 MT has a battery connected, but is not powered by it

2 MT does not have a battery connected

3 Recognized power fault, calls inhibited

<bcl>: integer type

0 battery is exhausted, or MT does not have a battery connected

1...100 battery has 1-100 percent of capacity remaining

Implementation

Optional.

8.5 Signal quality +CSQ

Table 64: +CSQ action command syntax

Command	Possible response(s)
+CSQ	+CSQ: <rssi>,<ber> *+CME ERROR: <err>*
+CSQ=?	+CSQ: (list of supported <rssi>s),(list of supported <ber>s)

Description

Execution command returns received signal strength indication <rssi> and channel bit error rate <ber> from the MT. Refer subclause 9.2 for possible <err> values.

Test command returns values supported as compound values.

Defined values

<rssi>: integer type

0 -113 dBm or less

1 -111 dBm

2...30 -109... -53 dBm

31 -51 dBm or greater

99 not known or not detectable

<ber>: integer type; channel bit error rate (in percent)

0...7 as RXQUAL values in the table in 3GPP TS 45.008 [20] subclause 8.2.4

99 not known or not detectable

Implementation

Optional.

8.6 Mobile termination control mode +CMEC

Table 65: +CMEC parameter command syntax

Command	Possible response(s)
+CMEC=[<keyp>[,<disp>[,<ind>[,<tscrn>]]]	*+CME ERROR: <err>*
+CMEC?	+CMEC: <keyp>,<disp>,<ind>,<tscrn>
+CMEC=?	+CMEC: (list of supported <keyp>s),(list of supported <disp>s),(list of supported <ind>s),(list of supported <tscrn>s)

Description

Set command selects the equipment, which operates MT keypad, writes to MT display and sets MT indicators. If operation mode is not allowed by the MT, +CME ERROR: <err> is returned. Refer subclause 9.2 for <err> values.

Test command returns the modes supported as compound values.

Defined values

<keyp>: integer type

0 MT can be operated only through its keypad (execute command of +CKPD cannot be used)

1 MT can be operated only from TE (with command +CKPD)

2 MT can be operated from both MT keypad and TE

<disp>: integer type

0 only MT can write to its display (command +CDIS can only be used to read the display)

1 only TE can write to MT display (with command +CDIS)

2 MT display can be written by both MT and TE

<ind>: integer type

0 only MT can set the status of its indicators (command +CIND can only be used to read the indicators)

1 only TE can set the status of MT indicators (with command +CIND)

2 MT indicators can be set by both MT and TE

<tscrn>: integer type

0 only MT can set the status of its indicators (execute command of +CTSA cannot be used)

1 only TE can set the status of MT indicators (with command +CTSA)

2 MT indicators can be set by both MT and TE

Implementation

Mandatory when any of keypad, display or indicator or touch screen commands is implemented.

8.7 Keypad control +CKPD

Table 66: +CKPD action command syntax

Command	Possible response(s)
+CKPD=<keys>[,<time>[,<pause>]]	*+CME ERROR: <err>*
+CKPD=?	

Description

Execution command emulates MT keypad by giving each keystroke as a character in a string <keys>. <time>*0.1 seconds is the time to stroke each key and <pause>*0.1 seconds is the length of pause between two strokes. If emulating fails in an MT error, +CME ERROR: <err> is returned. Refer subclause 9.2 for <err> values. This command should be accepted (OK returned) before actually starting to press the keys. Thus unsolicited result codes of key pressings and display events can be returned (refer subclause "Mobile Termination event reporting +CMER").

Defined values

<keys>: string of characters representing keys as listed in the following table 67 (based on PCCA STD-101 [17] Annex I table I-3). Colon character (IRA 58) followed by one character can be used to indicate a manufacturer specific key not listed here. All characters from a semicolon character (IRA 59) to the next single semicolon character are treated as alpha entries and are not converted to key equivalents. All semicolon characters inside alpha entries should be duplicated in the TE and stripped to one before entering to the MT. Pause character (IRA 87 or 119) can be used to pause between key pressings for a time specified by <pause>. All IRA values not listed here are reserved.

Table 67: Character codes

Char	IRA (dec)	Comment (+ some known key symbols)
#	35	hash (number sign)
%	37	percent sign (P)
*	42	star (*)
0... 9	48... 57	number keys
:	58	escape character for manufacturer specific keys
;	59	escape character for string entering
<	60	left arrow
>	62	right arrow
@	64	alpha key (α/ABC)
A/a	65/97	channel A (A)
B/b	66/98	channel B (B)
C/c	67/99	clear display (C/CLR)
D/d	68/100	volume down
E/e	69/101	connection end (END)
F/f	70/102	function (FCN)
L/l	76/108	phone lock (LOCK)
M/m	77/109	menu (MENU)
P/p	80/112	power (PWR)
Q/q	81/113	quiet/mute (MUTE)
R/r	82/114	recall last number (R/RCL/MR)
S/s	83/115	connection start (SEND)
T/t	84/116	store/ memory (STO/M/M+)
U/u	85/117	volume up
V/v	86/118	down arrow
W/w	87/119	pause character
X/x	88/120	auxiliary (AUX)
Y/y	89/121	delete last character (C)

Char	IRA (dec)	Comment (+ some known key symbols)
[	91	soft key 1
]	93	soft key 2
^	94	up arrow

<time>, <pause>: integer type

0...255 0... 25.5 seconds (default values are manufacturer specific, but should be so long that a normal MT can handle keystrokes correctly)

Implementation

Mandatory for MT not supporting the +CPIN command and supporting AT commands only.

8.8 Display control +CDIS

Table 68: +CDIS parameter command syntax

Command	Possible response(s)
+CDIS=[<text>[,<text>[,...]]]	*+CME ERROR: <err>*
+CDIS?	+CDIS: <text>[,<text>[,...]] *+CME ERROR: <err>*
+CDIS=?	+CDIS: <length>[,<length>[,...]] *+CME ERROR: <err>*

Description

Set command is used to write the contents of MT text type display elements. An element can consist of one character or several characters. The order of element parameters <text> should follow the rule: first is the element in upper left corner, second is the next element to the right and so on. The last element is the element in lower right corner. The number of elements is MT specific. If MT does not allow writing to its display or MT is not currently reachable, +CME ERROR: <err> is returned. Refer subclause 9.2 for <err> values. If certain element is not writable, setting of it should be ignored. If element parameter is empty field, element shall remain in the previous value.

NOTE 1: This command cannot be used to write to a display which sum of element lengths exceed the length of the command line buffer of the TA.

Read command returns the contents of MT display elements. If <text> field is empty (not empty string), MT does not allow the reading of corresponding element. If MT is not currently reachable, +CME ERROR: <err> is returned. Refer subclause 9.2 for <err> values.

Test command returns maximum length of each display element. If MT does not offer the length of elements, <length> fields should be empty. If MT is not currently reachable, +CME ERROR: <err> is returned. Refer subclause 9.2 for <err> values.

NOTE 2: MT manufacturer should offer the order and maximum length of elements.

Defined values

<text>: string type parameter using character set specified by command Select TE Character Set +CSCS

<length>: integer type parameter giving the maximum length of corresponding <text> parameter

Implementation

Optional.

8.9 Indicator control +CIND

Table 69: +CIND parameter command syntax

Command	Possible response(s)
+CIND=[<ind>[,<ind>[,...]]]	*+CME ERROR: <err>*
+CIND?	+CIND: <ind>[,<ind>[,...]] *+CME ERROR: <err>*
+CIND=?	+CIND: (<descr>,(list of supported <ind>s))[,(<descr>,(list of supported <ind>s))[,...]] *+CME ERROR: <err>*

Description

Set command is used to set the values of MT indicators. <ind> value 0 means that the indicator is off (or in state which can be identified as "off"-state), 1 means that indicator is on (or in a state which is more substantial than "off"-state), 2 is more substantial than 1, and so on. If the indicator is a simple on/off style element, it has values 0 and 1. The number of elements is MT specific. If MT does not allow setting of indicators or MT is not currently reachable, +CME ERROR: <err> is returned. Refer subclause 9.2 for <err> values. If certain indicator is not writable, setting of it should be ignored. If parameter is empty field, indicator shall remain in the previous value.

Read command returns the status of MT indicators. If MT is not currently reachable, +CME ERROR: <err> is returned. Refer subclause 9.2 for <err> values.

Test command returns pairs, where string value <descr> is a maximum 16 character description of the indicator and compound value is the allowed values for the indicator. If MT is not currently reachable, +CME ERROR: <err> is returned. Refer subclause 9.2 for <err> values.

NOTE: MT manufacturer should offer the description of supported indicators not listed here and their value ranges and default values.

Defined values

<ind>: integer type value, which shall be in range of corresponding <descr>

<descr> values reserved by the present document and their <ind> ranges:

"battchg" battery charge level (0-5)

"signal" signal quality (0-5)

"service" service availability (0-1)

"sounder" sounder activity (0-1)

"message" message received (0-1)

"call" call in progress (0-1)

"vox" transmit activated by voice activity (0-1)

"roam" roaming indicator (0-1)

"smsfull" a short message memory storage in the MT has become full and a short message has been rejected (2), has become full (1), or memory locations are available (0); i.e. the range is (0-2)

"inputstatus" keypad/touch screen status (0-1)

Implementation

Optional.

8.10 Mobile termination event reporting +CMER

Table 70: +CMER parameter command syntax

Command	Possible response(s)
+CMER=[<mode>[,<keyp>[,<disp>[,<ind>[,<bfr>[,<tscrn>][,<orientation>]]]]]]	*+CME ERROR: <err>*
+CMER?	+CMER: <mode>,<keyp>,<disp>,<ind>,<bfr>,<tscrn>,<orientation>
+CMER=?	+CMER: (list of supported <mode>s),(list of supported <keyp>s),(list of supported <disp>s),(list of supported <ind>s),(list of supported <bfr>s),(list of supported <tscrn>s),(list of supported <orientation>s)

Description

Set command enables or disables sending of unsolicited result codes from TA to TE in the case of key pressings, display changes, and indicator state changes. <mode> controls the processing of unsolicited result codes specified within this command. <bfr> controls the effect on buffered codes when <mode> 1, 2 or 3 is entered. If setting is not supported by the MT, +CME ERROR: <err> is returned. Refer subclause 9.2 for <err> values.

Test command returns the modes supported as compound values.

Defined values

<mode>: integer type

0 buffer unsolicited result codes in the TA; if TA result code buffer is full, codes can be buffered in some other place or the oldest ones can be discarded

1 discard unsolicited result codes when TA-TE link is reserved (e.g. in on-line data mode); otherwise forward them directly to the TE

2 buffer unsolicited result codes in the TA when TA-TE link is reserved (e.g. in on-line data mode) and flush them to the TE after reservation; otherwise forward them directly to the TE

3 forward unsolicited result codes directly to the TE; TA-TE link specific inband technique used to embed result codes and data when TA is in on-line data mode

<keyp>: integer type

0 no keypad event reporting

1 keypad event reporting using unsolicited result code +CKEV: <key>,<press>. <key> indicates the key (refer IRA values defined in table 67 in subclause "Keypad control +CKPD") and <press> if the key is pressed or released (1 for pressing and 0 for releasing). Only those key pressings, which are not caused by +CKPD shall be indicated by the TA to the TE.

NOTE 1: When this mode is enabled, corresponding result codes of all keys currently pressed are flushed to the TA regardless of <bfr> setting.

2 keypad event reporting using unsolicited result code +CKEV: <key>,<press>. All key pressings shall be directed from TA to TE.

NOTE 2: When this mode is enabled, corresponding result codes of all keys currently pressed are flushed to the TA regardless of <bfr> setting.

<disp>: integer type

0 no display event reporting

1 display event reporting using unsolicited result code +CDEV: <elem>,<text>. <elem> indicates the element order number (as specified for +CDIS) and <text> is the new value of text element. Only those display events, which are not caused by +CDIS shall be indicated by the TA to the TE. Character set used in <text> is as specified by command Select TE Character Set +CSCS

2 display event reporting using unsolicited result code +CDEV: <elem>,<text>. All display events shall be directed from TA to TE. Character set used in <text> is as specified by command Select TE Character Set +CSCS

<ind>: integer type

0 no indicator event reporting

1 indicator event reporting using unsolicited result code +CIEV: <ind>,<value>. <ind> indicates the indicator order number (as specified for +CIND) and <value> is the new value of indicator. Only those indicator events, which are not caused by +CIND shall be indicated by the TA to the TE

2 indicator event reporting using unsolicited result code +CIEV: <ind>,<value>. All indicator events shall be directed from TA to TE

<bfr>: integer type

0 TA buffer of unsolicited result codes defined within this command is cleared when <mode> 1...3 is entered

1 TA buffer of unsolicited result codes defined within this command is flushed to the TE when <mode> 1...3 is entered (OK response shall be given before flushing the codes)

<tscrn>: integer type

0 no touch screen event reporting

1 touch screen event reporting using unsolicited result code +CTEV: <action>,<x>,<y>. The <x>,<y> parameters indicate the x, y coordinates on the touch screen device (as specified for +CTSA), and <action> indicates the action performed on the screen (0 for screen released, 1 for screen depressed, 2 for single tap, and 3 for double tap). Only those touch screen events, which are not caused by +CTSA shall be indicated by the TA to the TE.

NOTE 3: When this mode is enabled, corresponding result codes of all touch screen actions are flushed to the TA regardless of <bfr> setting.

2 touch screen event reporting using unsolicited result code +CTEV: <action>,<x>,<y>. All touch screen events shall be directed from the TA to the TE.

NOTE 4: When this mode is enabled, corresponding result codes of all touch screen actions are flushed to the TA regardless of <bfr> setting.

3 Verbose mode. Touch screen event reporting using unsolicited result code +CTEV: <action>,<x>,<y>. This is a special mode where intermediate depressed result codes (+CTEV: 1,<x>,<y>) are generated for each new <x>,<y> coordinate detected while a user is dragging a touch to a new location. All other touch screen actions shall be directed from the TA to the TE normally. Only those touch screen events which are not caused by +CTSA shall be indicated by the TA to the TE.

NOTE 5: When this mode is enabled, corresponding result codes of all touch screen actions are flushed to the TA regardless of <bfr> setting.

4 enchanced touch screen event reporting using unsolicited result code +CTEV: <action>,<x>,<y>,<id>[,<duration>]. The <x>,<y> parameters indicate the x, y coordinates on the touch screen device (as specified for +CTSA), the <duration> parameter indicates the duration of the touch (as specified for +CTSA) and, the <id> identifies any simultaneous touch (as specified for +CTSA). Only those touch screen events, which are not caused by +CTSA shall be indicated by the TA to

the TE. The <action> parameter indicates the action performed on the screen, if the <duration> parameter is:

- 0, it is valid for the <action> parameter to indicate 0 for screen released, 1 for screen depressed, 2 for single tap, and 3 for double tap;
- a positive, non-zero integer, it is valid for the <action> parameter to indicate 0 for screen released.

NOTE 6: When this mode is enabled, corresponding result codes of all touch screen actions are flushed to the TA regardless of <bfr> setting.

5 enchanced touch screen event reporting using unsolicited result code +CTEV: <action>,<x>,<y>,<id>[,<duration>]. See description of <tscrn> set to 4 for the valid for the <action> parameter. All touch screen events shall be directed from the TA to the TE.

NOTE 7: When this mode is enabled, corresponding result codes of all touch screen actions are flushed to the TA regardless of <bfr> setting.

6 Verbose mode. enchanced touch screen event reporting using unsolicited result code +CTEV: <action>,<x>,<y>,<id>[,<duration>]. This is a special mode where intermediate depressed result codes (+CTEV: 1,<x>,<y>,<id>[,<duration>]) are generated for each new <x>,<y> coordinate detected while a user is dragging a touch to a new location. All other touch screen actions shall be directed from the TA to the TE normally. See description of <tscrn> set to 4 for the valid for the <action> parameter. Only those touch screen events which are not caused by +CTSA shall be indicated by the TA to the TE.

NOTE 8: When this mode is enabled, corresponding result codes of all touch screen actions are flushed to the TA regardless of <bfr> setting.

<orientation>: integer type: Parameter to enable display orientation event reporting from the TA to the TE, using unsolicited result code +COEV: <CurrentTopSide>. The <CurrentTopSide> parameter indicates the top of the ME's screen (as specified for +CSO).

0 No display orientation event reporting.

1 Only those display orientation events, which are not caused by +CSO shall be indicated.

2 All display orientation events shall be indicated.

Implementation

Mandatory when any of the keypad, display, or indicator, or touch screen result codes is implemented.

8.11 Select phonebook memory storage +CPBS

Table 71: +CPBS parameter command syntax

Command	Possible response(s)
+CPBS=<storage>[,<password>]	*+CME ERROR: <err>*
+CPBS?	+CPBS: <storage>[,<used>,<total>] *+CME ERROR: <err>*
+CPBS=?	+CPBS: (list of supported <storage>s)

Description

Set command selects phonebook memory storage <storage>, which is used by other phonebook commands. If setting fails in an MT error, +CME ERROR: <err> is returned. Refer subclause 9.2 for <err> values.

Read command returns currently selected memory, and when supported by manufacturer, number of used locations and total number of locations in the memory.

Test command returns supported storages as compound value.

Defined values

<storage> values reserved by the present document:

"DC" MT dialled calls list (+CPBW may not be applicable for this storage)

"EN" SIM/USIM (or MT) emergency number (+CPBW is not be applicable for this storage)

"FD" SIM/USIM fixdialling-phonebook. In the currently selected card slot, if a SIM card is present or if a UICC with an active GSM application is present, the information in EF_{FDN} under $DF_{Telecom}$ is selected. If a UICC with an active USIM application is present, the information in EF_{FDN} under ADF_{USIM} is selected.

"LD" SIM/UICC last-dialling-phonebook

"MC" MT missed (unanswered received) calls list (+CPBW may not be applicable for this storage)

"ME" MT phonebook

"MT" combined MT and SIM/USIM phonebook

"ON" SIM (or MT) own numbers (MSISDNs) list (reading of this storage may be available through +CNUM also). When storing information in the SIM/UICC, if a SIM card is present or if a UICC with an active GSM application is present, the information in EF_{MSISDN} under $DF_{Telecom}$ is selected. If a UICC with an active USIM application is present, the information in EF_{MSISDN} under ADF_{USIM} is selected.

"RC" MT received calls list (+CPBW may not be applicable for this storage)

"SM" SIM/UICC phonebook. In the currently selected card slot, if a SIM card is present or if a UICC with an active GSM application is present, the EF_{ADN} under $DF_{Telecom}$ is selected. If a UICC with an active USIM application is present, the global phonebook, $DF_{PHONEBOOK}$ under $DF_{Telecom}$ is selected.

"TA" TA phonebook

"AP" Selected application phonebook. In the currently selected card slot, if a UICC with an active USIM application is present, the application phonebook, $DF_{PHONEBOOK}$ under ADF_{USIM} is selected.

<password>: string type value representing the PIN2-code required when selecting PIN2-code locked <storage>s above, e.g. "FD" or the hidden key to be verified in order to access to the hidden phonebook entries in the UICC/USIM or any other phonebook with hidden entries.

If the combined phonebook is selected, "MT", the <password> will correspond to the hidden key of the USIM phonebook.

<used>: integer type value indicating the number of used locations in selected memory

<total>: integer type value indicating the total number of locations in selected memory

Implementation

Mandatory when phonebook read, find or write command, or direct dialling (refer subclause "Direct dialling from phonebooks") is implemented.

8.12 Read phonebook entries +CPBR

Table 72: +CPBR action command syntax

Command	Possible response(s)
+CPBR=<index1>[,<index2>]	[+CPBR: <index1>,<number>,<type>,<text>[,<hidden>][,<group>][,<adnumber>][,<adtype>][,<secondtext>][,<email>][,<sip_uri>][,<tel_uri>]] [[...] [<CR><LF>+CPBR: <index2>,<number>,<type>,<text>[,<hidden>][,<group>][,<adnumber>][,<adtype>][,<secondtext>][,<email>][,<sip_uri>][,<tel_uri>]]] *+CME ERROR: <err>*
+CPBR=?	+CPBR: (list of supported <index>s),[<nlength>],[<tlength>],[<glength>],[<slength>],[<elength>],[<siplength>],[<tellength>] *+CME ERROR: <err>*

Description

Execution command returns phonebook entries in location number range <index1>... <index2> from the current phonebook memory storage selected with +CPBS. If <index2> is left out, only location <index1> is returned. Entry fields returned are location number <index*n*>, phone number stored there <number> (of format <type>), text <text> associated with the number, if the selected phonebook supports hidden entries, <hidden> indicating if the entry is hidden, <group> indicating a group the entry may belong to, <adnumber> an additional number (of format <adtype>), <secondtext> a second text field associated with the number, <email> an email field, <sip_uri> SIP number and <tel_uri> TEL number. If all queried locations are empty (but available), no information text lines may be returned. If listing fails in an MT error, +CME ERROR: <err> is returned. Refer subclause 9.2 for <err> values.

Test command returns location range supported by the current storage as a compound value and the maximum lengths of <number>, <text>, <group>, <secondtext>, <email>, <sip_uri> and <tel_uri> fields. In case of (U)SIM storage, the lengths may not be available. If MT is not currently reachable, +CME ERROR: <err> is returned. Refer subclause 9.2 for <err> values.

Defined values

<index1>, <index2>, <index>: integer type values in the range of location numbers of phonebook memory

<number>: string type phone number of format <type>

<type>: type of address octet in integer format (refer 3GPP TS 24.008 [8] subclause 10.5.4.7)

<text>: string type field of maximum length <tlength>; character set as specified by command Select TE Character Set +CSCS

<group>: string type field of maximum length <glength>; character set as specified by command Select TE Character Set +CSCS

<adnumber>: string type phone number of format <adtype>

<adtype>: type of address octet in integer format (refer 3GPP TS 24.008 [8] subclause 10.5.4.7)

<secondtext>: string type field of maximum length <slength>; character set as specified by command Select TE Character Set +CSCS

<email>: string type field of maximum length <elength>; character set as specified by command Select TE Character Set +CSCS

<sip_uri>: string type field of maximum length <siplength>; character set as specified by command Select TE Character Set +CSCS

<tel_uri>: string type phone number of maximum length <tellength>; character set as specified by command Select TE Character Set +CSCS

<nlength>: integer type value indicating the maximum length of field <number>

<tlength>: integer type value indicating the maximum length of field <text>

<glength>: integer type value indicating the maximum length of field <group>

<slength>: integer type value indicating the maximum length of field <secondtext>

<elength>: integer type value indicating the maximum length of field <email>

<siplength>: integer type value indicating the maximum length of field <sip_uri>

<tellength>: integer type value indicating the maximum length of field <tel_uri>

<hidden>: integer type value indicates if the entry is hidden or not

0: phonebook entry not hidden

1: phonebook entry hidden

Implementation

Optional.

8.13 Find phonebook entries +CPBF

Table 73: +CPBF action command syntax

Command	Possible response(s)
+CPBF=<findtext>	[+CPBF: <index1>,<number>,<type>,<text>[,<hidden>][,<group>][,<adnumber>][,<adtype>][,<secondtext>][,<email>][,<sip_uri>][,<tel_uri>]] [<CR><LF>+CBPF: <index2>,<number>,<type>,<text>[,<hidden>][,<group>][,<adnumber>][,<adtype>][,<secondtext>][,<email>][,<sip_uri>][,<tel_uri>] [...]] *+CME ERROR: <err>*
+CPBF=?	+CPBF: [<nlength>],[<tlength>],[<glength>],[<slength>],[<elength>],[<siplength>],[<tellength>] *+CME ERROR: <err>*

Description

Execution command returns phonebook entries (from the current phonebook memory storage selected with +CPBS) which alphanumeric field start with string <findtext>. Entry fields returned are location number <index*n*>, phone number stored there <number> (of format <type>), text <text> associated with the number, if the selected phonebook supports hidden entries, <hidden> indicating if the entry is hidden, <group> indicating a group the entry may belong to, <adnumber> an additional number (of format <adtype>), <secondtext> a second text field associated with the number, <email> an email field, <sip_uri> SIP number and <tel_uri> TEL number. If listing fails in an MT error, +CME ERROR: <err> is returned. Refer subclause 9.2 for <err> values.

Test command returns the maximum lengths of <number>, <text>, <group>, <secondtext>, <email>, <sip_uri> and <tel_uri> fields. In case of (U)SIM storage, the lengths may not be available. If MT is not currently reachable, +CME ERROR: <err> is returned. Refer subclause 9.2 for <err> values.

Defined values

<index1>, <index2>: integer type values in the range of location numbers of phonebook memory

<number>: string type phone number of format <type>

<type>: type of address octet in integer format (refer 3GPP TS 24.008 [8] subclause 10.5.4.7)

<group>: string type field of maximum length <glength>; character set as specified by command Select TE Character Set +CSCS

<adnumber>: string type phone number of format <adtype>

<adtype>: type of address octet in integer format (refer 3GPP TS 24.008 [8] subclause 10.5.4.7)

<secondtext>: string type field of maximum length <slength>; character set as specified by command Select TE Character Set +CSCS

<email>: string type field of maximum length <elength>; character set as specified by command Select TE Character Set +CSCS

<findtext>, <text>: string type field of maximum length <tlength>; character set as specified by command Select TE Character Set +CSCS

<sip_uri>: string type field of maximum length <siplength>; character set as specified by command Select TE Character Set +CSCS

<tel_uri>: string type phone number of maximum length <tellength>; character set as specified by command Select TE Character Set +CSCS

<nlength>: integer type value indicating the maximum length of field <number>

<tlength>: integer type value indicating the maximum length of field <text>

<glength>: integer type value indicating the maximum length of field <group>

<slength>: integer type value indicating the maximum length of field <secondtext>

<elength>: integer type value indicating the maximum length of field <email>

<siplength>: integer type value indicating the maximum length of field <sip_uri>

<tellength>: integer type value indicating the maximum length of field <tel_uri>

<hidden>: integer type value indicates if the entry is hidden or not

0: phonebook entry not hidden

1: phonebook entry hidden

Implementation

Optional.

8.14 Write phonebook entry +CPBW

Table 74: +CPBW parameter command syntax

Command	Possible response(s)
+CPBW=[<index>][,<number>[,<type>[,<text>[,<group>[,<adnumber>[,<adtype>[,<secondtext>[,<email>[,<sip_uri>[,<tel_uri>[,<hidden>]]]]]]]]]]	+CPBW: <written_index> *+CME ERROR: <err>*
+CPBW?	+CPBW: <written_index>
+CPBW=?	+CPBW: (list of supported <index>s),[<nlength>],(list of supported <type>s),[<tlength>],[<glength>],[<slength>],[<elength>],[<siplength>],[<tellength>] *+CME ERROR: <err>*

Description

Execution command writes phonebook entry in location number <index> in the current phonebook memory storage selected with +CPBS. Entry fields written are phone number <number> (in the format <type>), text <text> associated with the number, if the selected phonebook supports hidden entries, <hidden> parameter, which indicates if the entry is hidden or not, <group> indicating a group the entry may belong to, <adnumber> an additional number (of format <adtype>), <secondtext> a second text field associated with the number, <email> an email field, <sip_uri> SIP number and <tel_uri> TEL number. If all those fields are omitted, the phonebook entry is deleted. If <index> is left out, but <number> is given, the entry is written to the first free location in the phonebook (the implementation of this feature is manufacturer specific). For successfull writes where <index> is not given, the intermediate result code +CPBW: <written_index> may be provded to indicate the location the entry was written to. If writing fails in an MT error, +CME ERROR: <err> is returned. Refer subclause 9.2 for <err> values.

Read command returns the last <written_index> value, or -1 if information about previous value is not available.

NOTE: Changing the current phonebook memory storage with +CPBS to another storage invalidates the last <written_index> value.

Test command returns location range supported by the current storage as a compound value, the maximum length of <number> field, supported number formats of the storage, the maximum length of <text> field, the maximum length of <group>, the maximum length of <secondtext>, the maximum length of <email>, the maximum length of <sip_uri> and the maximum length of <tel_uri>. In case of SIM storage, the lengths may not be available. If MT is not currently reachable, +CME ERROR: <err> is returned. Refer subclause 9.2 for <err> values. If storage does not offer format information, the format list should be empty parenthesis

Defined values

<index>: integer type values in the range of location numbers of phonebook memory

<number>: string type phone number of format <type>

<type>: type of address octet in integer format (refer 3GPP TS 24.008 [8] subclause 10.5.4.7) ; default 145 when dialling string includes international access code character "+", otherwise 129

<text>: string type field of maximum length <tlength>; character set as specified by command Select TE Character Set +CSCS

<group>: string type field of maximum length <glength>; character set as specified by command Select TE Character Set +CSCS

<adnumber>: string type phone number of format <adtype>

<adtype>: type of address octet in integer format (refer 3GPP TS 24.008 [8] subclause 10.5.4.7)

<secondtext>: string type field of maximum length <slength>; character set as specified by command Select TE Character Set +CSCS

<email>: string type field of maximum length <elength>; character set as specified by command Select TE Character Set +CSCS

<sip_uri>: string type field of maximum length <siplength>; character set as specified by command Select TE Character Set +CSCS

<tel_uri>: string type phone number of maximum length <tellength>; character set as specified by command Select TE Character Set +CSCS

<nlength>: integer type value indicating the maximum length of field <number>

<tlength>: integer type value indicating the maximum length of field <text>

<glength>: integer type value indicating the maximum length of field <group>

<slength>: integer type value indicating the maximum length of field <secondtext>

<elength>: integer type value indicating the maximum length of field <email>

<siplength>: integer type value indicating the maximum length of field <sip_uri>

<tellength>: integer type value indicating the maximum length of field <tel_uri>

<hidden>: integer type value indicates if the entry is hidden or not

0: phonebook entry not hidden

1: phonebook entry hidden

<written_index>: integer type value indicating the last location number <index> of the written phonebook entry

Implementation

Optional.

8.15 Clock +CCLK

Table 75: +CCLK parameter command syntax

Command	Possible response(s)
+CCLK=<time>	*+CME ERROR: <err>*
+CCLK?	+CCLK: <time> *+CME ERROR: <err>*
+CCLK=?	

Description

Set command sets the real-time clock of the MT. If setting fails in an MT error, +CME ERROR: <err> is returned. Refer subclause 9.2 for <err> values.

Read command returns the current setting of the clock.

Defined values

<time>: string type value; format is "yy/MM/dd,hh:mm:ss±zz", where characters indicate year (two last digits), month, day, hour, minutes, seconds and time zone (indicates the difference, expressed in quarters of an hour, between the local time and GMT; range -96...+96). E.g. 6th of May 1994, 22:10:00 GMT+2 hours equals to "94/05/06,22:10:00+08"

NOTE: If MT does not support time zone information then the three last characters of <time> are not returned by +CCLK?. The format of <time> is specified by use of the +CSDF command.

Implementation

Optional.

8.16 Alarm +CALA

Table 76: +CALA parameter command syntax

Command	Possible response(s)
+CALA=<time>[,<n>[,<type>[,<text>[,<recurr>[,<silent>]]]]]	*+CME ERROR: <err>*
+CALA?	[+CALA: <time>,<n1>,<type>,[<text>],[<recurr>],<silent>] [<CR><LF>+CALA: <time>,<n2>,<type>,[<text>],[<recurr>],<silent> [...]] *+CME ERROR: <err>*
+CALA=?	+CALA: (list of supported <n>s),(list of supported <type>s),<tlength>,<rlength>,(list of supported <silent>s) *+CME ERROR: <err>*

Description

Set command sets an alarm time in the MT. There can be an array of different types of alarms, and each alarm may cause different text to be displayed in the MT display. If setting fails in an MT error, +CME ERROR: <err> is returned. Refer subclause 9.2 for <err> values.

To set up a recurrent alarm for one or more days in the week, the <recurr>-parameter may be used.

When an alarm is timed out and executed, the unsolicited result code +CALV: <n> is always returned, even if the alarm is set up to be silent.

Read command returns the list of current active alarm settings in the MT.

Test command returns supported array index values, alarm types, and maximum length of the text to be displayed.

Defined values

<time>: refer +CCLK,+CSDF

NOTE: If the <recurr>-parameter is used, the <time>-parameter must not contain a date.

<n>, <n1>, <n2>: integer type value indicating the index of the alarm; default is manufacturer specific

<type>: integer type value indicating the type of the alarm (e.g. sound, volume, LED); values and default are manufacturer specific

<text>: string type value indicating the text to be displayed when alarm time is reached; maximum length <tlength>

<tlength>: integer type value indicating the maximum length of <text>

<recurr>: string type value indicating day of week for the alarm in one of the following formats:

"<1..7>[,<1..7>[…]]"	Sets a recurrent alarm for one or more days in the week. The digits 1 to 7 corresponds to the days in the week, Monday (1), …, Sunday (7). Example: The string "1,2,3,4,5" may be used to set an alarm for all weekdays.
"0"	Sets a recurrent alarm for all days in the week.

<rlength>: integer type value indicating the maximum length of <recurr>

<silent>: Integer type value indicating if the alarm is silent or not. If set to 1 the alarm will be silent and the only result from the alarm is the unsolicited result code +CALV. If set to 0 the alarm will not be silent.

Implementation

Optional.

8.17 Generic SIM access +CSIM

Table 77: +CSIM action command syntax

Command	Possible response(s)
+CSIM=<length>,<command>	+CSIM: <length>,<response> *+CME ERROR: <err>*
+CSIM=?	

Description

Set command transmits to the MT the <command> it then shall send as it is to the SIM. In the same manner, the SIM <response> shall be sent back by the MT to the TA as it is. Refer subclause 9.2 for <err> values.

This command allows a direct control of the SIM that is installed in the currently selected card slot, by an distant application on the TE. The TE shall then take care of processing SIM information within the frame specified by GSM/UMTS.

NOTE: Compared to Restricted SIM Access command +CRSM, the definition of +CSIM allows TE to take more control over the SIM-MT interface. The locking and unlocking of the interface may be done by a special <command> value or automatically by TA/MT (by interpreting <command> parameter). In case that TE application does not use the unlock command (or does not send a <command> causing automatic unlock) in a certain timeout value, MT may release the locking.

Defined values

<length> : integer type; length of the characters that are sent to TE in <command> or <response> (two times the actual length of the command or response)

<command> : command passed on by the MT to the SIM in the format as described in 3GPP TS 51.011 [28] (hexadecimal character format; refer +CSCS)

<response> : response to the command passed on by the SIM to the MT in the format as described in 3GPP TS 51.011 [28] (hexadecimal character format; refer +CSCS)

Implementation

Optional.

8.18 Restricted SIM access +CRSM

Table 78: +CRSM action command syntax

Command	Possible response(s)
+CRSM=<command>[,<fileid>[,<P1>,<P2>,<P3>[,<data>[,<pathid>]]]]	+CRSM: <sw1>,<sw2>[,<response>] *+CME ERROR: <err>*
+CRSM=?	

Description

By using this command instead of Generic SIM Access +CSIM TE application has easier but more limited access to the SIM database. Set command transmits to the MT the SIM <command> and its required parameters. If a SIM installed in the currently selected card slot, the MT handles internally all SIM-MT interface locking and file selection routines. As response to the command, MT sends the actual SIM information parameters and response data. MT error result code +CME ERROR may be returned when the command cannot be passed to the SIM, but failure in the execution of the command in the SIM is reported in <sw1> and <sw2> parameters. Refer subclause 9.2 for <err> values.

Coordination of command requests to SIM and the ones issued by GSM/UMTS application inside the MT is implementation dependent. However the TE should be aware of the precedence of the GSM/UMTS application commands to the TE commands.

Defined values

<command> (command passed on by the MT to the SIM; refer 3GPP TS 51.011 [28]):

176 READ BINARY

178 READ RECORD

192 GET RESPONSE

214 UPDATE BINARY

220 UPDATE RECORD

242 STATUS

203 RETRIEVE DATA

219 SET DATA

all other values are reserved

NOTE 1: The MT internally executes all commands necessary for selecting the desired file, before performing the actual command.

<fileid>: integer type; this is the identifier of a elementary datafile on SIM. Mandatory for every command except STATUS

NOTE 2: The range of valid file identifiers depends on the actual SIM and is defined in 3GPP TS 51.011 [28]. Optional files may not be present at all.

<P1>, <P2>, <P3>: integer type; parameters passed on by the MT to the SIM. These parameters are mandatory for every command, except GET RESPONSE and STATUS. The values are described in 3GPP TS 51.011 [28]

<data>: information which shall be written to the SIM (hexadecimal character format; refer +CSCS)

<pathid>: string type; contains the path of an elementary file on the SIM/UICC in hexadecimal format as defined in ETSI TS 102 221 [60] (e.g. "7F205F70" in SIM and UICC case). The <pathid> shall only be used in the mode "select by path from MF" as defined in ETSI TS 102 221 [60].

NOTE 3: Since valid elementary file identifiers may not be unique over all valid dedicated file identifiers the <pathid> indicates the targeted UICC/SIM directory path in case of ambiguous file identifiers. For earlier versions of this specification or if <pathid> is omitted, it could be implementation specific which one will be selected.

<sw1>, <sw2>: integer type; information from the SIM about the execution of the actual command. These parameters are delivered to the TE in both cases, on successful or failed execution of the command

<response>: response of a successful completion of the command previously issued (hexadecimal character format; refer +CSCS). STATUS and GET RESPONSE return data, which gives information about the current elementary datafield. This information includes the type of file and its size (refer 3GPP TS 51.011 [28]). After READ BINARY, READ RECORD or RETRIEVE DATA command the requested data will be returned. <response> is not returned after a successful UPDATE BINARY, UPDATE RECORD or SET DATA command

Implementation

Optional.

8.19 Secure control command +CSCC

Table 79: +CSCC parameter command syntax

Command	Possible response(s)
+CSCC=<mode>[,<cmd_set>[,<token>]]	+CSCC: <challenge> *+CME ERROR: <err>*
+CSCC?	+CSCC: <mode>,<cmd_set1> [<CR><LF>+CSCC: <mode>,<cmd_set2> [...]] *+CME ERROR: <err>*
+CSCC=?	+CSCC: (list of supported <mode>s),(list of supported <cmd_set>s)

Description

This command is used to enable/disable access to commands protected by security mechanism. This enables/disables access to command sets designated as "secure" such as programming of MT. Refer subclause 9.2 for possible <err> values.

The TE asks for a <challenge> with <mode>=1 and one specific command set (<cmd_set>), the MT replies with the <challenge>, which should be inserted into the identification algorithm in both entities (TE and MT). The algorithm output <token> is sent to the MT with <mode>=2 to enable the specified command set. <mode>=3 is used to disable the command set.

The read command returns the status (<mode> 2 or 3) of each supported command set.

Defined values

<mode>: integer type

1 request challenge token to enable access to specified command set

2 enable access to specified command set (<token> required)

3 disable access to specified command set

<cmd_set>, <cmd_set1>, <cmd_set2>:

0 MT/TA code re-programming command set.

other values below 128 are reserved by the present document

<token>: string type; a variable length bit string represented with IRA characters 0 - 9 and A - F, each character representing a nibble; e.g. bit string "0110 1100 1001 1010" is represented by the IRA string "6C9A". The length of the required bit string varies depending on the value of <cmd_set>.

<challenge>: same format as token

Implementation

Optional.

8.20 Alert sound mode +CALM

Table 80: +CALM parameter command syntax

Command	Possible response(s)
+CALM=[<mode>]	*+CME ERROR: <err>*
+CALM?	+CALM: <mode> *+CME ERROR: <err>*
+CALM=?	+CALM: (list of supported <mode>s) *+CME ERROR: <err>*

Description

This command is used to select the general alert sound mode of the MT. Refer subclause 9.2 for possible <err> values.

Read command returns the current value of <mode>.

Test command returns supported values as compound value.

Defined values

<mode>: integer type

0 normal mode

1 silent mode (all sounds from MT are prevented)

2… manufacturer specific

Implementation

Optional.

8.21 Ringer sound level +CRSL

Table 81: +CRSL parameter command syntax

Command	Possible response(s)
+CRSL=<level>	*+CME ERROR: <err>*
+CRSL?	+CRSL: <level> *+CME ERROR: <err>*
+CRSL=?	+CRSL: (list of supported <level>s) *+CME ERROR: <err>*

Description

This command is used to select the incoming call ringer sound level of the MT. Refer subclause 9.2 for possible `<err>` values.

Test command returns supported values as compound value.

Defined values

`<level>`: integer type value with manufacturer specific range (smallest value represents the lowest sound level)

Implementation

Optional.

8.22 Vibrator mode +CVIB

Table 82: +CVIB parameter command syntax

Command	Possible response(s)
`+CVIB=[<mode>]`	*`+CME ERROR: <err>`*
`+CVIB?`	`+CVIB: <mode>` *`+CME ERROR: <err>`*
`+CVIB=?`	`+CVIB: (`list of supported `<mode>`s`)` *`+CME ERROR: <err>`*

Description

This command is used to enable and disable the vibrator alert feature of the MT. It is manufacturer specific how this interacts with `+CALM` command. Refer subclause 9.2 for possible `<err>` values.

Read command returns the current value of `<mode>`.

Test command returns supported values as compound value.

Defined values

`<mode>`: integer type

0	disable
1	enable
...15	reserved by the present document
16…	manufacturer specific

Implementation

Optional.

8.23 Loudspeaker volume level +CLVL

Table 83: +CLVL parameter command syntax

Command	Possible response(s)
`+CLVL=<level>`	*`+CME ERROR: <err>`*

+CLVL?	+CLVL: <level> +CME ERROR: <err>
+CLVL=?	+CLVL: (list of supported <level>s) +CME ERROR: <err>

Description

This command is used to select the volume of the internal loudspeaker of the MT. Refer subclause 9.2 for possible <err> values.

Test command returns supported values as compound value.

Defined values

<level>: integer type value with manufacturer specific range (smallest value represents the lowest sound level)

Implementation

Optional.

8.24 Mute control +CMUT

Table 84: +CMUT parameter command syntax

Command	Possible response(s)
+CMUT=[<n>]	+CME ERROR: <err>
+CMUT?	+CMUT: <n> +CME ERROR: <err>
+CMUT=?	+CMUT: (list of supported <n>s)

Description

This command is used to enable and disable the uplink voice muting during a voice call. Refer subclause 9.2 for possible <err> values.

Read command returns the current value of <n>.

Test command returns supported values as compound value.

Defined values

<n>: integer type

0 mute off

1 mute on

Implementation

Optional.

8.25 Accumulated call meter +CACM

Table 85: +CACM parameter command syntax

Command	Possible response(s)
+CACM=[<passwd>]	*+CME ERROR: <err>*
+CACM?	+CACM: <acm> *+CME ERROR: <err>*
+CACM=?	

Description

Set command resets the Advice of Charge related accumulated call meter value in SIM card or in the active application in the UICC (GSM or USIM) file EF_{ACM}. ACM contains the total number of home units for both the current and preceding calls. SIM PIN2 is usually required to reset the value. If setting fails in an MT error, +CME ERROR: <err> is returned. Refer subclause 9.2 for <err> values.

Read command returns the current value of ACM.

Defined values

<passwd>: string type; SIM PIN2

<acm>: string type; accumulated call meter value similarly coded as <ccm> under +CAOC

Implementation

Optional.

8.26 Accumulated call meter maximum +CAMM

Table 86: +CAMM parameter command syntax

Command	Possible response(s)
+CAMM=[<acmmax>[,<passwd>]]	*+CME ERROR: <err>*
+CAMM?	+CAMM: <acmmax> *+CME ERROR: <err>*
+CAMM=?	

Description

Set command sets the Advice of Charge related accumulated call meter maximum value in SIM card or in the active application in the UICC (GSM or USIM) file EF_{ACMmax}. ACMmax contains the maximum number of home units allowed to be consumed by the subscriber. When ACM (refer +CACM) reaches ACMmax calls are prohibited (see also 3GPP TS 22.024 [26]). SIM PIN2 is usually required to set the value. If setting fails in an MT error, +CME ERROR: <err> is returned. Refer subclause 9.2 for <err> values.

Read command returns the current value of ACMmax.

Defined values

<acmmax>: string type; accumulated call meter maximum value similarly coded as <ccm> under +CAOC; value zero disables ACMmax feature

<passwd>: string type; SIM PIN2

Implementation

Optional.

8.27 Price per unit and currency table +CPUC

Table 87: +CPUC parameter command syntax

Command	Possible response(s)
+CPUC=<currency>,<ppu>[,<passwd>]	*+CME ERROR: <err>*
+CPUC?	+CPUC: <currency>,<ppu> *+CME ERROR: <err>*
+CPUC=?	

Description

Set command sets the parameters of Advice of Charge related price per unit and currency table in SIM card or in the active application in the UICC (GSM or USIM) file EF_{PUCT}. PUCT information can be used to convert the home units (as used in +CAOC, +CACM and +CAMM) into currency units. SIM PIN2 is usually required to set the parameters. If setting fails in an MT error, +CME ERROR: <err> is returned. Refer subclause 9.2 for <err> values.

Read command returns the current parameters of PUCT.

Defined values

<currency>: string type; three-character currency code (e.g. "GBP", "DEM"); character set as specified by command Select TE Character Set +CSCS

<ppu>: string type; price per unit; dot is used as a decimal separator (e.g. "2.66")

<passwd>: string type; SIM PIN2

Implementation

Optional.

8.28 Call meter maximum event +CCWE

Table 88: +CCWE parameter command syntax

Command	Possible response(s)
+CCWE=[<mode>]	*+CME ERROR: <err>*
+CCWE?	+CCWE: <mode> *+CME ERROR: <err>*
+CCWE=?	+CCWE: (list of supported <mode>s) *+CME ERROR: <err>*

Description

Shortly before the ACM (Accumulated Call Meter) maximum value is reached, an unsolicited result code +CCWV will be sent, if enabled by this command. The warning is issued approximately when 30 seconds call time remains. It is also issued when starting a call if less than 30 s call time remains. If setting fails in an MT error, +CME ERROR: <err> is returned. Refer subclause 9.2 for <err> values.

Read command returns the current setting.

Test command returns supported settings.

Defined values

<mode>: integer type

0 Disable the call meter warning event

1 Enable the call meter warning event

Implementation

Optional.

8.29 Power class +CPWC

Table 89: +CPWC parameter command syntax

Command	Possible response(s)
+CPWC=[<class>[,<band>]]	*+CME ERROR: <err>*
+CPWC?	+CPWC: <curr_class1>,<def_class1>,<band1>[,<curr_class2>,<def_class2>,<band2>[...]] *+CME ERROR: <err>*
+CPWC=?	+CPWC: list of supported (<band>,(list of <class>s)) pairs *+CME ERROR: <err>*

Description

This command is used to set the preferred MT power class for each GSM frequency band supported. The interaction of this setting with the selected bearer service (+CBST and HSCSD commands) is manufacturer specific (for example, selecting a multislot operation might reduce the power class automatically). If setting fails in an MT error, +CME ERROR: <err> is returned. Refer subclause 9.2 for <err> values.

Read command returns the currently selected output power class and default output power class for each supported frequency band (as defined by MT manufacturer). Parameter <band1> and its associated power class parameters refer to the currently used frequency band. For example, +CPWC: 2,1,1,5,4,0 in case of a dual-band MT currently using band GSM1800, for which the power class is currently set to 2, the default being class 1, and for which the currently set power class value for GSM900 is class 5 the default being class 4.

Test command returns supported bands and their power classes. For example,

+CPWC: (0,(0,4,5)),(1,(0-2)) in case of a dual-band handheld MT.

Defined values

<class>, <curr_class*n*>s, <def_class*n*>s: integer type

0 default (not applicable to <curr_class>s or <def_class*n*>s)

1… MT output power class as in 3GPP TS 45.005 [38]

<band>, <band*n*>s:

0 GSM900

1 GSM1800

2 reserved for GSM1900

3 GSM 400

Implementation

Optional.

8.30 Set language +CLAN

Table 90: +CLAN parameter command syntax

Command	Possible response(s)
+CLAN=<code>	*+CME ERROR: <err>*
+CLAN?	+CLAN: <code> *+CME ERROR: <err>*
+CLAN=?	+CLAN: (list of supported <code>s) *+CME ERROR: <err>*

Description

This command sets the language in the MT. The set-command must confirm the selected language with the MMI-module in the MT. If setting fails, a MT error, +CME ERROR: <err> is returned. Refer subclause 9.2 for <err> values.

The <code>-parameter is a two-letter abbreviation of the language. The language codes, as defined in ISO 639, consists of two characters, e.g. "sv", "en" etc.

The complete set of language codes to be used are manufacturer specific and should all be possible to use with the command. Some examples are described under <code>. For a complete list see ISO 639.

The read command gives the current language as output. If the language has been set to "AUTO", the read command returns the current language set from the currently selected SIM-card /UICC. Hence, the "AUTO"-code is never returned by the read-command.

Test command returns supported <code>s.

Defined values

<code>: (not all language codes are present in this list)

"AUTO"	Read language from SIM-card /UICC. "Auto" is not returned by the read-command.
"sw"	Swedish
"fi"	Finnish
"da"	Danish
"no"	Norwegian
"de"	German
"fr"	French
"es"	Spanish
"it"	Italian
"en"	English

Implementation

Optional.

8.31 Language event +CLAE

Table 91: +CLAE parameter command syntax

Command	Possible response(s)
+CLAE=[<mode>]	*+CME ERROR: <err>*
+CLAE?	+CLAE: <mode> *+CME ERROR: <err>*
+CLAE=?	+CLAE: (list of supported <mode>s) *+CME ERROR: <err>*

Description

This command is used to enable/disable unsolicited result code +CLAV: <code>. If <mode>=1, +CLAV: <code> is sent from the MT when the language in the MT is changed. If setting fails, a MT error, +CME ERROR: <err> is returned. Refer subclause 9.2 for <err> values.

Read command returns the current status for <mode>.

Test command returns supported <mode>s.

Defined values

<mode>: integer type

0 Disable unsolicited result code +CLAE

1 Enable unsolicited result code +CLAE

<code>: For description see +CLAN.

Implementation

Optional.

8.32 Set greeting text +CSGT

Table 92: +CSGT parameter command syntax

Command	Possible response(s)
+CSGT=<mode>[,<text>]	*+CME ERROR: <err>*
+CSGT?	+CSGT: <text>,<mode> *+CME ERROR: <err>*
+CSGT=?	+CSGT: (list of supported <mode>s),<ltext> *+CME ERROR: <err>*

Description

This command sets and activates the greeting text in the MT. The greeting text is shown in the MT display when the MT is turned on. The command can also be used to deactivate a text. If setting fails in an MT error, +CME ERROR: <err> is returned. Refer subclause 9.2 for <err> values.

The read command queries the current <text> and the status of the <mode> parameter

Test command returns supported <mode>s and the maximum number of characters in <text>. For example,

`+CSGT: (0-1),20`

Defined values

`<text>`: string type; A free text that shall be displayed. The text can not include <CR>

`<mode>`: integer type

0 Turn off greeting text

1 Turn on greeting text

Implementation

Optional.

8.33 Set voice mail number +CSVM

Table 93: +CSVM parameter command syntax

Command	Possible response(s)
`+CSVM=<mode>[,<number>[,<type>]]`	*`+CME ERROR: <err>`*
`+CSVM?`	`+CSVM: <mode>,<number>,<type>` *`+CME ERROR: <err>`*
`+CSVM=?`	`+CSVM: (`list of supported `<mode>`s`),(`list of supported `<type>`s`)` *`+CME ERROR: <err>`*

Description

The number to the voice mail server is set with this command. The parameters `<number>` and `<type>` can be left out if the parameter `<mode>` is set to 0. If setting fails, an MT error, `+CME ERROR: <err>` is returned. Refer subclause 9.2 for `<err>` values.

Read command returns the currently selected voice mail number and the status (i.e. enabled/disabled).

Test command returns supported `<mode>`s and `<type>`s.

Defined values

`<mode>`: integer type

0 Disable the voice mail number.

1 Enable the voice mail number.

`<number>`: string type; Character string <0..9,+>

<type>: integer type; Type of address octet. (refer 3GPP TS 24.008 [8] subclause 10.5.4.7)

129 ISDN / telephony numbering plan, national / international unknown

145 ISDN / telephony numbering plan, international number

161 ISDN / telephony numbering plan, national number

128 - 255 Other values refer 3GPP TS 24.008 [8] subclause 10.5.4.7

`<type>`: type of address octet in integer format (refer 3GPP TS 24.008 [8] subclause 10.5.4.7); default 145 when dialling string includes international access code character "+", otherwise 129

Implementation

Optional.

8.34 Ring melody control +CRMC

Table 94: +CRMC parameter command syntax

Command	Possible response(s)
+CRMC=<index>,<volume>[,[<call type>][,<profile>]]	*+CME ERROR: <err>*
+CRMC?	+CRMC: <index>,<volume>[,[<call type1>][,<profile1>]] [<CR><LF>+CRMC: <index>,<volume>[,[<call type2>][,<profile1>]][...]] [<CR><LF>+CRMC: <index>,<volume>[,[<call type1>][,<profile2>]]] [<CR><LF>+CRMC: <index>,<volume>[,[<call type2>][,<profile2>]][...]] *+CME ERROR: <err>*
+CRMC=?	+CRMC: (list of supported <index>s),(list of supported <volume>s)[,[(list of supported <call type>s)][,(list of supported <profile>s)]] *+CME ERROR: <err>*

Description

Write command causes the MT to set a specific ring melody and volume for the selected call type and profile. The default values for the optional parameters are defined by the manufacturer.

Read command queries the settings for the ring melody. If call types and profiles are available the corresponding ring melodies are listed. Starting with call type1 and profile1 the ring melody settings for each available profile and call type is issued.

Test command returns the list of available ring melodies, volumes, call types and profiles.

Refer subclause 9.2 for <err> values.

Defined values

<index>: integer type; manufacturer specific number to identify a certain ring melody

<volume>: integer type value with manufacturer specific range (smallest value represents the lowest sound level)

<call type*x*>: integer type; manufacturer specific number for a call type

<profile*x*>: integer type; manufacturer specific number for a profile

Implementation

Optional.

8.35 Ring melody playback +CRMP

Table 95: +CRMP action command syntax

Command	Possible response(s)
+CRMP=<call type>[,<volume>[,<type>,<index>]]	*+CME ERROR: <err>*
+CRMP=?	+CRMP: (list of supported <call type>s),(list of supported <volume>s),(<type0>),(list of supported <index>s) [<CR><LF>+CRMP: (list of supported <call type>s),(list of supported <volume>s),(<type1>),(list of supported <index>s)] *+CME ERROR: <err>*

Description

Execution command causes the MT to playback a specific ring type. The default values for the optional parameters are the current selected in the MT.

Test command returns the available ring melodies.

Refer subclause 9.2 for <err> values.

Defined values

<call type>: integer type; manufacturer specific

<volume>: integer type value with manufacturer specific range (smallest value represents the lowest sound level)

<type>: integer type

0 Manufacturer defined

1 User defined

<index>: integer type

Implementation

Optional.

8.36 Master reset +CMAR

Table 96: +CMAR action command syntax

Command	Possible response(s)
+CMAR=<phone lock code>	*+CME ERROR: <err>*
+CMAR=?	*+CME ERROR: <err>*

Description

This command requests the MT to reset user data. The user data in the phone will be reset to default values. If setting fails, a MT error, +CME ERROR: <err>, is returned. Refer subclause 9.2 for <err> values.

If the MT is locked and this command is used, then the MT will be unlocked after the master reset.

Test command returns OK.

Defined values

<phone lock code> string type; Security code (Phone Lock code) must be verified before performing the master reset.

Implementation

Optional.

8.37 List all available AT commands +CLAC

Table 97: +CLAC action command syntax

Command	Possible response(s)
+CLAC	<AT Command1> [<CR><LF><AT Command2> [...]] *+CME ERROR: <err>*
+CLAC=?	*+CME ERROR: <err>*

Description

Execution command causes the MT to return one or more lines of AT Commands. Refer subclause 9.2 for <err> values.

NOTE: This command only returns the AT commands that are available for the user.

Defined values

<AT Command>:

Defines the AT command including the prefix AT. Text shall not contain the sequence 0<CR> or OK<CR>

Implementation

Optional.

8.38 Delete alarm +CALD

Table 98: +CALD action command syntax

Command	Possible response(s)
+CALD=<n>	*+CME ERROR: <err>*
+CALD=?	+CALD: (list of supported <n>s) *+CME ERROR: <err>*

Description

Action command deletes an alarm in the MT. If the command fails in an MT error, +CME ERROR: <err> is returned. Refer subclause 9.2 for <err> values.

Test command returns supported array index values.

Defined values

<n>: integer type value indicating the index of the alarm; default is manufacturer specific

Implementation

Optional.

8.39 Postpone or dismiss an alarm +CAPD

Table 99: +CAPD action command syntax

Command	Possible response(s)
+CAPD[=<sec>]	*+CME ERROR: <err>*
+CAPD=?	+CAPD: (list of supported <sec>s) *+CME ERROR: <err>*
NOTE: The syntax of the AT Set Command is corrected to be according to ITU-T Recommendation V.250 [14]. Older versions of the specification specify incorrect syntax +CAPD=[<sec>].	

Description

Set command postpones or dismisses a currently active alarm. If the command fails in an MT error, +CME ERROR: <err> is returned. Refer subclause 9.2 for <err> values.

Test command returns supported <sec>-parameter values.

Defined values

<sec>: integer type value indicating the number of seconds to postpone the alarm. If <sec> is set to 0 (default), the alarm is dismissed.

Implementation

Optional.

8.40 Automatic time zone update +CTZU

Table 100: +CTZU parameter command syntax

Command	Possible response(s)
+CTZU=[<onoff>]	*+CME ERROR: <err>*
+CTZU?	+CTZU: <onoff> *+CME ERROR: <err>*
+CTZU=?	+CTZU: (list of supported <onoff>s) *+CME ERROR: <err>*

Description

Set command enables and disables automatic time zone update via NITZ. If setting fails in an MT error, +CME ERROR: <err> is returned. Refer subclause 9.2 for <err> values.

Read command returns the current settings in the MT.

Test command returns supported on- and off-values.

Defined values

<onoff>: integer type value indicating

0 Disable automatic time zone update via NITZ.

1 Enable automatic time zone update via NITZ.

Implementation

Optional.

8.41 Time zone reporting +CTZR

Table 101: +CTZR parameter command syntax

Command	Possible response(s)
+CTZR=[<reporting>]	*+CME ERROR: <err>*
+CTZR?	+CTZR:<reporting> *+CME ERROR: <err>*
+CTZR=?	+CTZR: (list of supported <reporting>s) *+CME ERROR: <err>*

Description

This set command controls the time zone change event reporting. If reporting is enabled the MT returns the unsolicited result code +CTZV: <tz>, or +CTZE: <tz>,<dst>,[<time>] whenever the time zone is changed. The MT also provides the time zone upon network registration if provided by the network. If setting fails in an MT error, +CME ERROR: <err> is returned. Refer subclause 9.2 for <err> values.

Read command returns the current reporting settings in the MT.

Test command returns supported <reporting>-values.

NOTE: The Time Zone reporting is not affected by the Automatic Time Zone setting command, +CTZU.

Defined values

<reporting>: integer type value indicating:

0 disable time zone change event reporting.

1 Enable time zone change event reporting by unsolicited result code +CTZV: <tz>.

2 Enable extended time zone reporting by unsolicited result code +CTZE: <tz>,<dst>,[<time>].

<tz>: string type value representing the sum of the local time zone (difference between the local time and GMT expressed in quarters of an hour) plus daylight saving time. The format is "±zz", expressed as a fixed width, two digit integer with the range -48 ... +56. To maintain a fixed width, numbers in the range -9 ... +9 are expressed with a leading zero, e.g. "-09", "+00" and "+09".

<dst>: integer type value indicating whether <tz> includes daylight savings adjustment;

0 <tz> includes no adjustment for Daylight Saving Time

1 <tz> includes +1 hour (equals 4 quarters in <tz>) adjustment for daylight saving time

2 <tz> includes +2 hours (equals 8 quarters in <tz>) adjustment for daylight saving time

<time>: string type value representing the local time. The format is "YYYY/MM/DD,hh:mm:ss", expressed as integers representing year (YYYY), month (MM), date (DD), hour (hh), minute (mm) and second (ss). This parameter can be provided by the network at the time of delivering time zone information and will be present in the extended time zone reporting unsolicited result code if provided by the network.

Implementation

Optional.

8.42 Enter protocol mode+CPROT

Table 102: +CPROT action command syntax

Command	Possible response(s)
+CPROT=<proto>[,<version>[,<lsap1>[,...[<lsapN>]]]]	CONNECT NO CARRIER OK ERROR *+CME ERROR: <err>*
+CPROT=?	+CPROT: <proto1>[,(list of supported <version>s)[,(list of supported <lsap1>s)[,...[,(list of supported <lsapN>s)]]]] [<CR><LF>+CPROT: <proto2>[,(list of supported <version>s)[,(list of supported <lsap1>s)[,...[,(list of supported <lsapN>s)]]]] [...]]

Description

Set command informs TA that TE wants to establish a peer-to-peer protocol <proto> or upper layer connection (indicating by the <lsap>s setting) with the MT on the link from which the command was received. This command can be used in case the link between TE and MT does not provide itself such a mechanism.

If MT has succeeded in establishing a logical link between application protocols and external interface, it will send CONNECT message to the TE. Otherwise, the NO CARRIER response will be returned.

If the CONNECT response is received, TE can start sending <proto> or upper layer frames.

The connection shall always return for <proto> mode when the protocol session is ended. When the MT receives a disconnect request from its peer entity, it will process it and send OK response to the TE indicating its capability for receiving new AT commands. Since <proto> or upper layers can be accessed in other ways, TA must have pre-knowledge of the fact that connection is initiated with AT+CPROT command. This means that switch to <proto> mode must include some sort of notification to the protocol entity.

This command can be aborted by sending a <proto> or upper layer disconnection frame. In that case, MT will return in command mode by sending the OK response.

Refer subclause 9.2 for possible <err> values.

Test command returns values supported as a compound value.

Defined values

<proto>: integer type

0 OBEX (refer IrDA Object Exchange Protocol [44]).

…15 reserved by the present document

16... manufacturer specific

<version>: version number of <proto>: string type

<lsap1>: integer type; defines a level of service or application protocol on the top of <proto> layer. It may refer to services or protocols defined in other standards development organizations (SDOs).

1 IrMC level 1 (Minimum Level) Only .(refer [43] subclause 2.9.4)

2 IrMC level 1 and 2 (Minimum and Access Levels) Only. .(refer [43] subclause 2.9.4)

4 IrMC level 1, 2 and 3 (Minimum, Access, Index Levels) Only- implies static index support. .(refer [43] subclause 2.9.4)

8 IrMC level 1, 2 and 4 (Minimum, Access and Sync Levels) Only-implies unique index support. .(refer [43] subclause 2.9.4)

10 IrMC level 1, 2, 3 and 4 (Minimum, Access, Index and Sync Levels)-implies support of static and unique index. .(refer [43] subclause 2.9.4)

…15 reserved by the present document

16... manufacturer specific

<lsap2>...<lsapN>: integer type

In case <lsapN>,<lsapN+1> received in the +CPROT command identifies protocol layers, the protocol identified by N+1 shall be on the top of the protocol identified by N on a framework point of view.

0…15 reserved by the present document

16... manufacturer specific

Implementation

Optional.

8.43 Generic UICC logical channel access +CGLA

Table 103: +CGLA action command syntax

Command	Possible response(s)
+CGLA=<sessionid>,<length>,<command>	+CGLA: <length>,<response> *+CME ERROR: <err>*
+CGLA=?	

Description

Set command transmits to the MT the <command> it then shall send as it is to the selected UICC. In the same manner the UICC <response> shall be sent back by the MT to the TA as it is. Refer subclause 9.2 for <err> values.

This command allows a direct control of the currently selected UICC by a distant application on the TE. The TE shall then take care of processing UICC information within the frame specified by GSM/UMTS.

Although Generic UICC Logical Channel Access command +CGLA allows TE to take control over the UICC-MT interface, there are some functions of the UICC-MT interface that logically do not need to be accessed from outside the TA/MT. Moreover, for security reason the GSM network authentication should not be handled outside the TA/MT. Therefore it shall not be allowed to execute a Run GSM Algorithm command or an Authenticate command in GSM context from the TE using +CGLA at all time whether the +CGLA is locked or unlocked. This shall not forbid the TE to send Authenticate commands in other security contexts (e.g. EAP security context).

For example, the TA/MT shall forbid the transfer of the Authenticate command to a USIM application when parameters P2 = 0 (GSM security context). See 3GPP TS 31.102 [59] for USIM authenticate command definition.

NOTE: Compared to Restricted UICC Access command +CRLA, the definition of +CGLA allows TE to take more control over the UICC-MT interface. The locking and unlocking of the interface may be done by a special <command> value or automatically by TA/MT (by interpreting <command> parameter). In case that TE application does not use the unlock command (or does not send a <command> causing automatic unlock) in a certain timeout value, MT may release the locking.

Defined values

<sessionid>: integer type; this is the identifier of the session to be used in order to send the APDU commands to the UICC. It is manadatory in order to send commands to the UICC when targeting applications on the smart card using a logical channel other than the default channel (channel "0").

<length> : integer type; length of the characters that are sent to TE in <command> or <response> (two times the actual length of the command or response)

<command> : command passed on by the MT to the UICC in the format as described in 3GPP TS 31.101 [65] (hexadecimal character format; refer +CSCS)

<response> : response to the command passed on by the UICC to the MT in the format as described in 3GPP TS 31.101 [65] (hexadecimal character format; refer +CSCS)

Implementation

Optional.

8.44 Restricted UICC logical channel access +CRLA

Table 104: +CRLA action command syntax

Command	Possible response(s)
+CRLA=<sessionid>,<command>[,<fileid>[,<P1>,<P2>,<P3>[,<data>[,<pathid>]]]]	+CRLA: <sw1>,<sw2>[,<response>] *+CME ERROR: <err>*
+CRLA=?	

Description

By using this command instead of Generic UICC Access +CGLA TE application has easier but more limited access to the UICC database. Set command transmits to the MT the UICC <command> and its required parameters. MT handles internally, for the selected UICC, all UICC-MT interface locking and file selection routines. As response to the command, MT sends the actual UICC information parameters and response data. MT error result code +CME ERROR may be returned when the command cannot be passed to the UICC, but failure in the execution of the command in the UICC is reported in <sw1> and <sw2> parameters. Refer subclause 9.2 for <err> values.

Coordination of command requests to UICC and the ones issued by GSM/UMTS application inside the MT is implementation dependent. However the TE should be aware of the precedence of the GSM/UMTS application commands to the TE commands.

Defined values

<sessionid>: integer type; this is the identifier of the session to be used in order to send the APDU commands to the UICC. It is mandatory in order to send commands to the UICC when targeting applications on the smart card using a logical channel other than the default channel (channel "0").

<command> (command passed on by the MT to the UICC; refer 3GPP TS 31.101 [65]):

176 READ BINARY

178 READ RECORD

192 GET RESPONSE

214 UPDATE BINARY

220 UPDATE RECORD

242 STATUS

203 RETRIEVE DATA

219 SET DATA

all other values are reserved

NOTE 1: The MT internally executes all commands necessary for selecting the desired file, before performing the actual command.<fileid>: integer type; this is the identifier of a elementary datafile on UICC. Mandatory for every command except STATUS.

NOTE 2: The range of valid file identifiers depends on the actual UICC and is defined in 3GPP TS 31.101 [65]. Optional files may not be present at all.<P1>, <P2>, <P3>: integer type; parameters passed on by the MT to the UICC. These parameters are mandatory for every command, except GET RESPONSE and STATUS. The values are described in 3GPP TS 31.101 [65].

<data>: information which shall be written to the SIM (hexadecimal character format; refer +CSCS)

<pathid>: string type; contains the path of an elementary file on the UICC in hexadecimal format (e.g. "5F704F30" for DF_{SoLSA}/EF_{SAI}). The <pathid> shall only be used in the mode "select by path from current DF" as defined in ETSI TS 102 221 [60].

<sw1>, <sw2>: integer type; information from the UICC about the execution of the actual command. These parameters are delivered to the TE in both cases, on successful or failed execution of the command

<response>: response of a successful completion of the command previously issued (hexadecimal character format; refer +CSCS). STATUS and GET RESPONSE return data, which gives information about the current elementary datafield. This information includes the type of file and its size (refer 3GPP TS 31.101 [65]). After READ BINARY, READ RECORD or RETRIEVE DATA command the requested data will be returned. <response> is not returned after a successful UPDATE BINARY, UPDATE RECORD or SET DATA command

Implementation

Optional.

8.45 Open logical channel +CCHO

Table 105: +CCHO action command syntax

Command	Possible response(s)
+CCHO=<dfname>	<sessionid> *+CME ERROR: <err>*
+CCHO=?	

Description

Execution of the command causes the MT to return <sessionid> to allow the TE to identify a channel that is being allocated by the currently selected UICC, which is attached to ME. The currently selected UICC will open a new logical channel; select the application identified by the <dfname> received with this command and return a session Id as the response. The ME shall restrict the communication between the TE and the UICC to this logical channel.

This <sessionid> is to be used when sending commands with Restricted UICC Logical Channel access +CRLA or Generic UICC Logical Channel access +CGLA commands.

NOTE: The logical channel number is contained in the CLASS byte of an APDU command, thus implicitly contained in all APDU commands sent to a UICC. In this case it will be up to the MT to manage the logical channel part of the APDU CLASS byte and to ensure that the chosen logical channel is relevant to the `<sessionid>` indicated in the AT command. See 3GPP TS 31.101 [65] for further information on logical channels in APDU commands protocol.

Refer subclause 9.2 for possible `<err>` values.

Defined values

`<dfname>`: all selectable applications in the UICC are referenced by a DF name coded on 1 to 16 bytes

`<sessionid>`: integer type; a session Id to be used in order to target a specific application on the smart card (e.g. (U)SIM, WIM, ISIM) using logical channels mechanism

See 3GPP TS 31.101 [65] for more information about defined values.

Implementation

Optional.

8.46 Close logical channel +CCHC

Table 106: +CCHC action command syntax

Command	Possible response(s)
`+CCHC=<sessionid>`	`+CCHC` *`+CME ERROR: <err>`*
`+CCHC=?`	

Description

This command asks the ME to close a communication session with the active UICC. The ME shall close the previously opened logical channel. The TE will no longer be able to send commands on this logical channel. The UICC will close the logical channel when receiving this command. Refer subclause 9.2 for possible `<err>` values.

Defined values

`<sessionid>`: integer type; a session Id to be used in order to target a specific application on the smart card (e.g. (U)SIM, WIM, ISIM) using logical channels mechanism

Implementation

Optional.

8.47 EAP authentication +CEAP

Table 107: +CEAP action command syntax

Command	Possible response(s)
`+CEAP=<dfname>,<EAPMethod>,<EAP packet data> [,<DFeap>]`	*`+CEAP: <EAPsessionid>, <EAP packet response>`* *`+CME ERROR: <err>`*
`+CEAP=?`	

Description

This command allows a TE to exchange EAP packets with the UICC or the ME.

Prior to the execution of this command, the TE shall retrieve the available AIDs using the +CUAD command. The TE shall select one appropriate AID to be addressed. Selection may include asking the user, and considering EAP methods supported by the AIDs. The TE shall set the <dfname> value using the selected AID and shall set the <EAPMethod> value to the requested EAP method. The TE may set the <DFeap> value to the directory file identifier that is applicable to the <EAPMethod>; which is derived from the discretionary data returned by +CUAD. The parameter is mandatory for EAP terminated in UICC.

If the targeted application on the UICC does support the requested EAP method, the MT shall use the value provided in <DFeap>, and it shall transmit the <EAP packet data> to the UICC application using the Authenticate APDU command as defined in ETSI TS 102 310 [66]. The appropriate DF_{EAP} in the ADF must be selected prior to the submission of an EAP Authenticate command with the <EAP packet data>. Then the EAP Response data sent by the UICC application in its response to the Authenticate command shall be provided to the TE in <EAP packet response>.

If the targeted application on the UICC does not support the requested EAP method and if the MT does support this method then the <EAP packet data> shall be handled by the MT. During the handling of the EAP method, the MT shall run the authentication algorithm on the SIM or USIM, respectively.

Also the MT has to allocate an <EAPsessionid> in order to identify an EAP session and its corresponding keys and parameters.

If neither the MT nor the appropriate UICC application support the requested EAP method, the MT shall respond with CME ERROR: 49 (EAP method not supported).

Refer subclause 9.2 for possible <err> values.

Defined values

<dfname>: string type in hexadecimal character format. All selectable applications are represented in the UICC by an AID coded on 1 to 16 bytes.

<EAPMethod>: string type in hexadecimal character format. This is the EAP Method Type as defined in RFC 3748 [68] in 1 byte format or 8 bytes expanded format. The v alue range for 1 byte format and for 8 bytes expanded format is defined in RFC 3748 [68].

<EAP packet data>: string type in hexadecimal character format. This is the EAP packet data in hexadecimal character as defined in ETSI TS 102 310 [66].

<DFeap>: string type in hexadecimal character format. Contains the DF(EAP) associated with the specified <EAPMethod> on the SIM/UICC as defined in ETSI TS 102 310 [66] (e.g. "6D34").

<EAPsessionid>: integer type. This is the identifier of the EAP session to be used in order to retrieve the EAP parameters with EAP Retreive Parameters +CERP command. Value range is from 1 to 4294967295.

<EAP packet response>: string type in hexadecimal character format. Defined in ETSI TS 102 310 [66].

Implementation

Optional.

8.48 EAP retrieve parameters +CERP

Table 108: +CERP action command syntax

Command	Possible response(s)
+CERP=<EAPsessionid>, <EAPparameter>	*+CERP: <EAP parameter response>* *+CME ERROR: <err>*
+CERP=?	

Description

This command allows a TE to retrieve EAP session parameters / derived keys after a run of the +CEAP command. If the EAP session is handled by the UICC then the MT shall return the content of the elementary file corresponding to the indicated <EAPparameter>. Those EFs are defined in ETSI TS 102 310 [66].

If the MT handles the EAP session then the MT shall return the corresponding parameter encoded as defined for EAP files, see ETSI TS 102 310 [66].

For example, the keys shall be retrieved in the TLV format described in ETSI TS 102 310 [66].

If neither the MT nor the appropriate UICC application can provide the requested information (e.g. because the requested EAP session ID does not exist), the MT shall respond with CME ERROR: 50 (Incorrect parameters).

Refer subclause 9.2 for possible <err> values.

Defined values

<EAPparameter>: integer type.

1 Keys

2 Status

3 Identity

4 Pseudonym

<EAPsessionid>: integer type; this is the identifier of the EAP session to be used in order to retrieve the EAP parameters corresponding to an active EAP session. Value range is from 1 to 4294967295.

<EAP parameter response>: string type in hexadecimal character format. The format of the parameter is defined in ETSI TS 102 310 [66]. The <EAP parameter response> depends on the value of the <EAPparameter>.

Implementation

Optional.

8.49 UICC application discovery +CUAD

Table 109: +CUAD action command syntax

Command	Possible response(s)
+CUAD[=<option>]	+CUAD: <response>[,<active_application>[,<AID>]] *+CME ERROR: <err>*
+CUAD=?	+CUAD: (list of supported <option>s)

Description

This command asks the MT to discover what applications are available for selection on the UICC. According to ETSI TS 102 221 [60], the ME shall access and read the EF_{DIR} file in the UICC and return the values that are stored in its records. Each record contains the AID and optionally application parameters of one of the applications available on the UICC.

If optional parameter(s) are requested and the EF_{DIR} file is not present in the UICC, <response> shall be empty.

Refer subclause 9.2 for possible <err> values.

Test command returns the supported option values as a compound value.

Defined values

<response>: string type in hexadecimal character format. The response is the content of the EF_{DIR}.

<option>: integer type.

0: no parameters requested in addition to <response>.

1 include <active_application>.

<active_application>: integer type.

0 no SIM or USIM active.

1 active application is SIM.

2 active application is USIM, followed by <AID>.

<AID>: string type in hexadecimal character format. AID of active USIM.

Implementation

Optional.

8.50 Mobile originated location request +CMOLR

Table 8.50-1: +CMOLR parameter command syntax

Command	Possible response(s)
+CMOLR=[<enable>[,<method>[,<hor-acc-set>[,<hor-acc>[,<ver-req>[,<ver-acc-set>[,<ver-acc>[,<vel-req>[,<rep-mode>[,<timeout>[,<interval>[,<shape-rep>[,<plane>[,<NMEA-rep>[,<third-party-address>]]]]]]]]]]]]]]]	*+CME ERROR: <err>*
+CMOLR?	+CMOLR: <enable>,<method>,<hor-acc-set>,[<hor-acc>],<ver-req>,[<ver-acc-set>],[<ver-acc>],<vel-req>,<rep-mode>,<timeout>,[<interval>],<shape-rep>,[<plane>],[<NMEA-rep>],[<third-party-address>] *+CME ERROR: <err>*

+CMOLR=?	+CMOLR: (list of supported <enable>s),(list of supported <method>s),(list of supported <hor-acc-set>s),(list of supported <hor-acc>s),(list of supported <ver-req>s),(list of supported <ver-acc-set>s),(list of supported <ver-acc>s),(list of supported <vel-req>s),(list of supported <rep-mode>s),(list of supported <timeout>s),(list of supported <interval>s),(list of supported <shape-rep>s),(list of supported <plane>s),(list of supported <NMEA-rep>s),(list of supported <third-party-address>s)

Description

Set command initiates a mobile originated location request (MO-LR). The parameter <enable> enables or disables positioning and reporting by unsolicited result codes. Reporting can be performed in the format of GAD shapes <location_parameters> or in the format of NMEA strings <NMEA-string> or both. The unsolicited result codes that can be provided are +CMOLRG: <location_parameters> and/or +CMOLRN: <NMEA-string>.

The method to use for positioning is decided by the parameter <method>. The parameters <hor-acc-set>, <hor-acc>, <ver-req>, <ver-acc-set>, <ver-acc> and <vel-req> indicate accuracy for the MO-LR. The parameter <timeout> indicates how long the MS will wait for a report before an unsolicited result code is provided. A single report or periodic reports can be requested by the parameter <rep-mode>. If periodic reports are requested, the time interval between the reports is specified by the parameter <interval>. If GAD shapes are requested, the GAD shapes that will be accepted in the unsolicited result code <location_parameters> are defined by the parameter <shape-rep>. The parameter <plane> specifies the signalling to use for MO-LR. The parameter <NMEA-rep> indicates possible restrictions in supported NMEA strings. The parameter <third-party-address> is used to specify the address when reporting to a third party is specified. Additional information about positioning can be found in 3GPP TS 25.305 [77]. If positioning-data cannot be provided at a timeout, the unsolicited result +CMOLRE is provided. Refer subclause 9.2 and subclause 9.3 for possible <err> values.

Read command returns the current settings of the parameters <enable>, <method>, <hor-acc-set>, <hor-acc>, <ver-req>, <ver-acc-set>, <ver-acc>, <vel-req>, <rep-mode>, <timeout>, <interval> <shape-rep>, <plane>, <NMEA-rep> and <third-party-address>. The parameters <hor-acc>, <ver-acc-set>, <ver-acc> and <plane> are only applicable in certain configurations. The parameter <interval> is only applicable if periodic reporting is specified. The parameter <NMEA-rep> is only applicable if reporting is specified by NMEA strings.The parameter <third-party-address> is only applicable if reporting to third party is specified.

Test command returns the supported values and ranges.

Defined values

<enable>: integer type. Enables and disables reporting location as a result of a MO-LR. Only one <method> can be enabled at any given time.

0 Disables reporting and positioning.

1 Enables reporting of NMEA strings by unsolicited result code +CMOLRN: <NMEA-string>.
Lack of data at each timeout is indicated by an unsolicited result code +CMOLRE.

2 Enables reporting of GAD shapes by unsolicited result code +CMOLRG: <location_parameters>.
Lack of data at each timeout is indicated by an unsolicited result code +CMOLRE.

3 Enables reporting of NMEA strings and GAD shapes by unsolicited result codes +CMOLRG: <location_parameters> and +CMOLRN: <NMEA-string>.
Lack of data at each timeout is indicated by an unsolicited result code +CMOLRE.

NOTE 1: The string of <location_parameters> intended for +CMOLR can be split into multiple unsolicited result codes e.g. in order to prevent that the string in the unsolicited result code becomes too long. How to split the string is implementation specific.

<method>: integer type. Method for MO-LR. The default value is implementation specific.

0 Unassisted GPS. Autonomous GPS only, no use of assistance data.

1 Assisted GPS (see NOTE 2).

2 Assisted GANSS (see NOTE 2).

3 Assisted GPS and GANSS (see NOTE 2).

4 Basic self location (the network determines the position technology).

5 Transfer to third party. This method makes the parameters <shape-rep> and <NMEA-rep> irrelevant (any values are accepted and disregarded). The third party address is given in the parameter <third-party-address> (see NOTE 3).

6 Retrieval from third party. This method is to get the position estimate of the third party. The third party address is given in the parameter <third-party-address>.

NOTE 2: For the methods that require assistance data, the assistance data obtained from the network is used for a UE-based GPS location procedure.

NOTE 3: Lack of data at each timeout is not indicated by an unsolicited result code +CMOLRE if reporting to third party is specified.

<hor-acc-set>: integer type.

0 Horisontal accuracy not set/specified.

1 Horizontal accuracy set in parameter <hor-acc>.

<hor-acc>: integer type. Requested accuracy as horizontal uncertainty exponent (refer to 3GPP TS 23.032 [76] subclause 6.2). The value range is 0-127. The default value is implementation specific.

<ver-req>: integer type.

0 Vertical coordinate (altitude) is not requested, 2D location fix is acceptable. The parameters <ver-acc-set> and <ver-acc> do not apply.

1 Vertical coordinate (altitude) is requested, 3D location fix is required.

<ver-acc-set>: integer type.

0 Vertical accuracy not set/specified.

1 Vertical accuracy set/specified in parameter <ver-acc>.

<ver-acc>: integer type. Requested accuracy as vertical uncertainty exponent (refer to 3GPP TS 23.032 [76] subclause 6.4). The value range is 0-127. The default value is implementation specific.

<vel-req>: integer type. Requested velocity type (refer to 3GPP TS 23.032 [76] subclause 8.6).

0 Velocity not requested.

1 Horizontal velocity requested.

2 Horizontal velocity and vertical velocity requested.

3 Horizontal velocity with uncertainty requested.

4 Horizontal velocity with uncertainty and vertical velocity with uncertainty requested.

<rep-mode>: integer type. Reporting mode. The default value is implementation specific.

0 Single report, the timeout for the MO-LR response request is specified by <timeout>.

1 Periodic reporting, the timeout for each MO-LR response request is specified by <timeout> and the interval between each MO-LR is specified by <interval>.

<timeout>: integer type. Indicates how long the MS will wait for a response after a MO-LR. The value range is in seconds from 1 to 65535. The default value is implementation specific.

<interval>: integer type. The parameter is applicable to periodic reporting only. Determine the interval between periodic MO-LRs. The value range is in seconds from 1 to 65535, and must be greater than or equal to <timeout>. The default value is implementation specific.

<shape-rep>: integer type. This parameter is a sum of integers each representing a certain GAD shape that will be accepted in the unsolicited result code <location_parameters>. Note that only one GAD shape is present per unsolicited result code. The default value is implementation specific.

1 Ellipsoid point.

2 Ellipsoid point with uncertainty circle.

4 Ellipsoid point with uncertainty ellipse.

8 Polygon.

16 Ellipsoid point with altitude.

32 Ellipsoid point with altitude and uncertainty ellipsoid.

64 Ellipsoid arc.

<plane>: integer type. The parameter specifies whether the control plane or SUPL will be used for MO-LR.

0 Control plane.

1 Secure user plane (SUPL).

<NMEA-rep>: string type. The supported NMEA strings are specified as a comma separated values inside one string. If the parameter is omitted or an empty string is given, no restrictions apply and all NMEA strings are supported. The default value is that all strings are supported.

Example of NMEA strings: "$GPRMC,$GPGSA,$GPGSV"

<third-party-address>: string type. The parameter is applicable to reporting to third party only, and specifies the address to the third party. This parameter has to be specified when <method> value is set to 5 or 6.

<location_parameters>: string type in UTF-8. This parameter provides XML-formatted strings of GAD-shape positioning data as defined in table 8.50-2. This parameter shall not be subject to conventional character conversion as per +CSCS. The XML according to the DTD in table 8.50-2 may be provided in one or multiple unsolicited result codes.

Table 8.50-2: XML DTD for <location_parameters>

```
<?xml version="1.0" ?>
<!DOCTYPE location_parameters [
<!ELEMENT location_parameters (time?,direction?,shape_data,velocity_data?)>
   <!ELEMENT time (#PCDATA)>
   <!ELEMENT direction (#PCDATA)>
   <!ELEMENT shape_data
(ellipsoid_point|ellipsoid_point_uncert_circle|ellipsoid_point_uncert_ellipse|po
lygon|ellipsoid_point_alt|ellipsoid_point_alt_uncertellipse|ellips_arc)>
      <!ELEMENT ellipsoid_point (coordinate)>
         <!ELEMENT coordinate (latitude,longitude)>
            <!ELEMENT latitude (north,degrees)>
```

```
                <!ELEMENT north (#PCDATA)>
                <!ELEMENT degrees (#PCDATA)>
            <!ELEMENT longitude (#PCDATA)>
      <!ELEMENT ellipsoid_point_uncert_circle (coordinate,uncert_circle)>
         <!ELEMENT uncert_circle (#PCDATA)>
      <!ELEMENT ellipsoid_point_uncert_ellipse (coordinate,uncert_ellipse)>
         <!ELEMENT uncert_ellipse
(uncert_semi_major,uncert_semi_minor,orient_major,confidence)>
            <!ELEMENT uncert_semi_major (#PCDATA)>
            <!ELEMENT uncert_semi_minor (#PCDATA)>
            <!ELEMENT orient_major (#PCDATA)>
            <!ELEMENT confidence (#PCDATA)>
      <!ELEMENT polygon (coordinate+)>
      <!ELEMENT ellipsoid_point_alt (coordinate,altitude)>
         <!ELEMENT altitude (height_above_surface,height)>
            <!ELEMENT height_above_surface (#PCDATA)>
            <!ELEMENT height (#PCDATA)>
      <!ELEMENT ellipsoid_point_alt_uncertellipse
(coordinate,altitude,uncert_semi_major,uncert_semi_minor,orient_major,confidence
,uncert_alt)>
         <!ELEMENT uncert_alt (#PCDATA)>
      <!ELEMENT ellips_arc
(coordinate,inner_rad,uncert_rad,offset_angle,included_angle,confidence)>
         <!ELEMENT inner_rad (#PCDATA)>
         <!ELEMENT uncert_rad (#PCDATA)>
         <!ELEMENT offset_angle (#PCDATA)>
         <!ELEMENT included_angle (#PCDATA)>
   <!ELEMENT velocity_data
(hor_velocity?,vert_velocity?,vert_velocity_direction?,hor_uncert?,vert_uncert?)
>
      <!ELEMENT hor_velocity (#PCDATA)>
      <!ELEMENT vert_velocity (#PCDATA)>
      <!ELEMENT vert_velocity_direction (#PCDATA)>
      <!ELEMENT hor_uncert (#PCDATA)>
      <!ELEMENT vert_uncert (#PCDATA)>
]>
```

`<NMEA-string>`: string type in UTF-8. This parameter provides an NMEA-string as defined in IEC 61162 [78]. This parameter shall not be subject to conventional character conversion as per `+CSCS`.

Example: `+CMOLRN`: "$GPRMC,235947.000,V,0000.0000,N,00000.0000,E,,,041299,,*1D<CR><LF>&"

Implementation

Optional.

8.51 Backlight +CBKLT

Table 8.51-1: +CBKLT parameter command syntax

Command	Possible response(s)
`+CBKLT=[<state>[,<duration>]]`	*`+CME ERROR: <err>`*
`+CBKLT?`	`+CBKLT: <state>,[<duration>]` *`+CME ERROR: <err>`*
`+CBKLT=?`	`+CBKLT:` (list of supported `<state>`s) *`+CME ERROR: <err>`*

Description

This command is used to enable or disable the backlight of the MT's main display. The backlight can be enabled indefinitely or the duration shall be indicated as a specified period of time (in seconds). Refer subclause 9.2 for possible `<err>` values.

Read command returns the current state and duration (in seconds) if applicable.

Test command returns supported values as compound value.

Defined values

`<state>`: integer type

0 disable

1 enable for the duration specified

2 enable indefinitely

3 enable for a short duration specified by the UE manufacturer

`<duration>`: integer type

xxxx in seconds

Implementation

Optional.

8.52 Command touch screen action +CTSA

Table 8.52-1: +CTSA action command syntax

Command	Possible response(s)
`+CTSA=<action>,<x>,<y>,<id>[,<duration>]`	`+CME ERROR: <err>`
`+CTSA=?`	`+CTSA:` (list of supported `<action>`s)

Description:

This command is used to emulate a touch screen action on the mobile equipment (ME). If emulation fails with an ME error, `+CME ERROR: <err>` is returned. Refer subclause 9.2 for `<err>` values.

This command should be accepted (OK returned) before actually emulating the touch screen action.

Test command returns the list of supported actions for the mobile equipment.

The top left corner of the touch screen is defined as the 0, 0 point, see figure 8.52-1. This coordinate does not change regardless of the display mode (portrait or landscape). All coordinate values are non-negative integers.

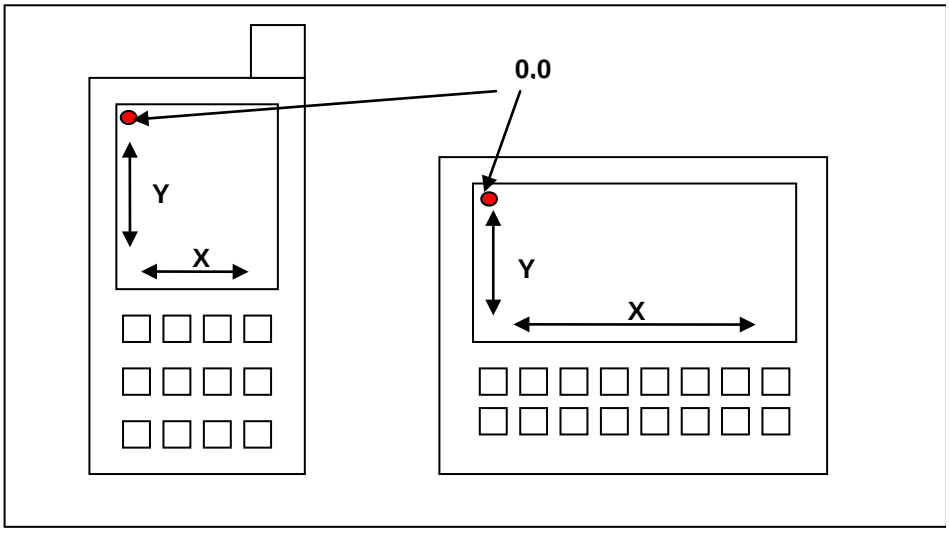

Figure 8.52-1: ME screen outline

Defined values

`<action>`: integer type

0 Release. Emulates the user releasing the touch screen at the `<x>`, `<y>` coordinates.

1 Depress. Emulates the user depressing the touch screen at location `<x>`, `<y>`.

NOTE 1: Consecutive Depress actions will emulate dragging a stylus on the touch device to the new location.

2 Single Tap. Emulates the user performing a single tap action at the `<x>`, `<y>` location. The timing required to emulate a single tap shall be handled by the mobile equipment.

3 Double Tap. Emulates the user performing a double tap action at the `<x>`, `<y>` location. The timing required to emulate a double tap shall be handled by the mobile equipment.

`<x>`: integer type. The horizontal x coordinate location of the action performed on the touch screen.

`<y>`: integer type. The vertical y coordinate location of the action performed on the touch screen.

`<id>`: integer type. A positive integer value. If *id* is a non-zero integer value *N*, then it represents, or correlates with, the Nth simultaneous touch action performed on the touch screen. If *id* is 0 then the touch screen action is an initial touch screen action or the touch screen action is correlated with the initial touch action.

NOTE 2: The number of possible simultaneous touch actions is implementation specific.

`<duration>`: integer type (the value range is in milliseconds from 1 to 65535). Emulates the user releasing the touch screen at the `<x>`, `<y>` coordinates after *duration* milliseconds. If the value is set to 0, then a duration is not indicated.

Examples:

User Action	Syntax	Description
Depress	AT+CTSA=1,25,45	This will emulate a user pressing down on the ME touch screen at the 25, 45 coordinates.
Release	AT+CTSA=0,25,45	This will emulate a user releasing the touch screen at the 25, 45 coordinates.
Single Tap	AT+CTSA=2,25,45	This will emulate a user single tapping the touch screen at the 25, 45 coordinates.
Double Tap	AT+CTSA=3,25,45	This will emulate a user double tapping the touch screen at the 25, 45 coordinates.
Drag	AT+CTSA=1,10,10; +CTSA=0,50,50	This will emulate a user touching at 10,10, dragging to 50,50, and releasing.
Draw	AT+CTSA=1,10,10; +CTSA=1,50,50; +CTSA=0,100,100	This will emulate a user touching at 10,10, then dragging to 50,50, then dragging to 100,100 and finally releasing the touch screen at 100,100.
Multi Touch	AT+CTSA=1,10,10,0; +CTSA=1,50,50,1; +CTSA=0,60,60,1; +CTSA=0,100,100,0	This will emulate a user initiating a first gesture touching at 10,10, then simultaneously initiating a second gesture at 50,50, then dragging the second gesture from 50, 50 to 60,60. The user releases the second gesture at 60. 60 while simultaneously dragging the first gesture from 10,10 to 100,100 and finally releasing the touch screen at 100,100.
Long Depress	AT+CTSA=1,10,10,0; +CTSA=0,10,10,0,3000	This will emulate a user touching at coordinates 10,10, and releasing the touch screen at coordinates 10, 10, after 3 seconds.

Implementation

Optional.

8.53 Command screen orientation +CSO

Table 8.53-1: +CSO parameter command syntax

Command	Possible response(s)
+CSO=<orientation>[,<Current TopSide>]	*+CME ERROR: <err>*
+CSO?	*+CSO: <orientation>[,<Current TopSide>]* *+CME ERROR: <err>*
+CSO=?	+CSO: (list of supported <orientation>s) *+CME ERROR: <err>*

Description

This command is used to set or read back the orientation of the screen on the mobile equipment (ME). The ME may override the setting via a key press or touch screen action. In addition to setting portrait mode and landscape mode, the command is used by the TE to set a reference orientation for the screen on the ME. The physical orientation of the ME shall not override this command. If emulation fails with an ME error, `+CME ERROR: <err>` is returned. Refer subclause 9.2 for `<err>` values.

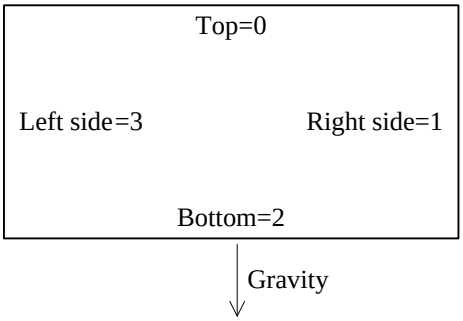

Figure 8.53-1: Labelled ME sides when the ME is in the normal operating mode

This command should be accepted (OK returned) before actually performing the action.

Test command returns the list of supported orientations for the mobile equipment.

Defined values

<`orientation`>: integer type

0 Portrait. The device is in portrait mode.

1 Landscape. The device is in landscape mode.

2 Any. The top of the ME's screen is identified by <`CurrentTopSide`> parameter, identifying a side of the screen of the ME.

<`CurrentTopSide`>: integer type, representing the label of the side that is the top of the screen.

0 Top. The ME is in the normal operating mode (see figure 8.53-1).

1 Right side. The side labelled right side is the side that is the top of the screen.

2 Bottom. The side labelled bottom is the side that is the top of the screen.

3 Left side. The side labelled left side is the side that is the top of the screen.

Examples:

Action	Syntax	Description
Get Orientation	`AT+CSO?`	This will return the current orientation of the screen device.
Set Orientation	`AT+CSO=0`	This will set the current orientation of the screen device to portrait.
Set Orientation	`ALT+CSO=2,3`	The right side is the current top side (e.g. the top can be determined relative to gravitational forces) and identifies the TE's reference orientation for the screen on the device.

Implementation

Optional.

8.54 Command screen size +CSS

Table 8.54-1: +CSS action command syntax

Command	Possible response(s)
+CSS	+CSS: <Max_X>,<Max_Y> *+CME ERROR: <err>*
+CSS=?	

Description

The execution of this command will get the size (in pixels) of the ME's (touch) screen.

The x-axis and y-axis will be based on a single normal operating mode of the ME, see figure 8.54-1. The 0,0 point will always be located at the top left corner of the screen in the normal operating mode. Changing the ME's mode from e.g. portrait mode to landscape mode does not change the physical location of 0,0 or how the x and y axes are interpreted.

If emulation fails with an ME error, +CME ERROR: <err> is returned. Refer subclause 9.2 for <err> values. This command should be accepted (OK returned) before returning the screen size of the device.

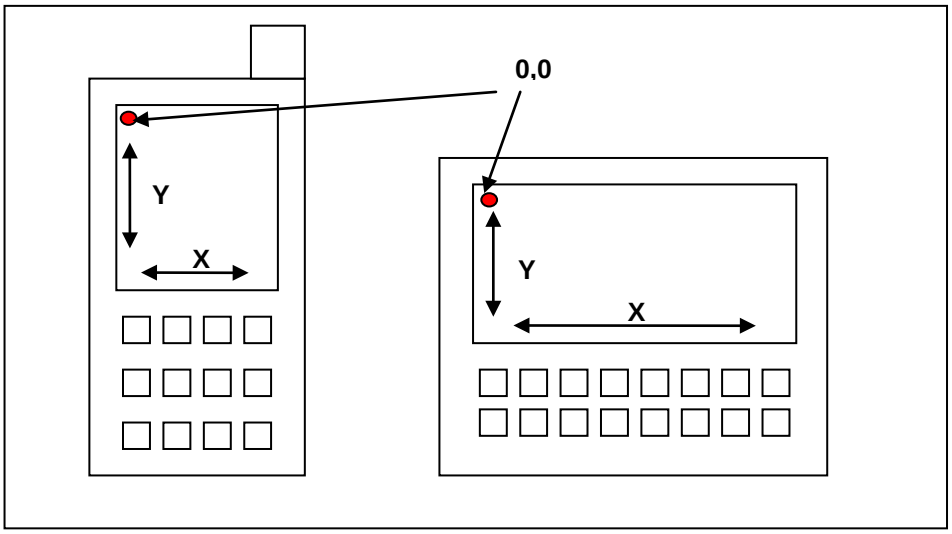

Figure 8.54-1: ME screen outline

Defined values

<Max_X>: integer type. Must be a positive integer representing the maxium width of the screen.

<Max_Y>: integer type. Must be a positive integer representing the maximum height of the screen

Implementation

Optional.

8.54A Command display screen boundary +CDSB

Table 8.54A-1: +CDSB action command syntax

Command	Possible response(s)
+CDSB	+CDSB: <Top_Left_X>,<Top_Left_Y>,<Bottom_Right_X>,<Bottom_Right_Y>[,<Width_of_the_Boundary>] *+CME ERROR: <err>*
+CDSB=?	

Description

The execution of this command will identify the boundary between a display area and a non-display area of the ME's (touch) screen. If the display area of the (touch) screen is the same size as the (touch) screen, the values <Top_Left_X>, <Top_Left_Y> are set to 0, and the values <Bottom_Right_X>, <Bottom_Right_Y> match the values returned by the command +CSS (see subclause 8.54).

As in subclause 8.54, the x-axis and y-axis will be based on a single normal operating mode of the ME.

If emulation fails with an ME error, +CME ERROR: <err> is returned. Refer subclause 9.2 for <err> values.

Defined values

<Top_Left_X>: integer type. Must be a positive integer representing the top left pixel X coordinate of the boundary.

<Top_Left_Y>: integer type. Must be a positive integer representing the top left pixel Y coordinate of the boundary.

<Bottom_Right_X>: integer type. Must be a positive integer representing the bottom right pixel X coordinate of the boundary.

<Bottom_Right_Y>: integer type. Must be a positive integer representing the bottom right pixel Y coordinate of the boundary.

<Width_of_the_Boundary>: integer type (the value range is in pixels, and starts at 1. The maximum value is implementation specific). Representing the width of the boundary, by default the width is 1 pixel. If the integer value is positive, the boundary is part of the display area of the ME's (touch) screen. If the integer value is negative, the boundary is part of the non-display area of the ME's (touch) screen.

Implementation

Optional.

8.55 Positioning control +CPOS

Table 8.55-1: +CPOS Action Command Syntax

Command	Possible response(s)
+CPOS<CR> text is entered <ctrl-Z/ESC>	*+CME ERROR: <err>*
+CPOS=?	

Description

Execution command causes the TE to enter a transparent mode for sending XML formatted data according to table 8.55-2: XML DTD for <pos>.

Subsequent to +CPOS:

- the TA shall send a two character sequence <CR><LF> after command line is terminated with <CR>. Then text can be entered from TE to ME/TA.
- the echoing of entered characters back from the TA is controlled by V.25ter echo command E.
- sending may be cancelled by giving <ESC> character (IRA 27).
- <ctrl-Z> (IRA 26) shall be used to indicate the ending of the message body.

Refer subclause 9.2 for possible <err> values.

Test command returns the supported values and ranges.

Defined events

<location>: string type in UTF-8. This parameter provides an XML-formatted string of GAD-shape positioning data similar to what is defined in table 8.55-3. This parameter shall not be subject to conventional character conversion as per +CSCS.

<assist_data>: string type in UTF-8. This parameter provides an XML-formatted string of assistance data as defined in table 8.55-5. This parameter shall not be subject to conventional character conversion as per +CSCS.

<pos_meas>: string type in UTF-8. This parameter provides an XML-formatted string of position measurements data request as defined in table 8.55-8. This parameter shall not be subject to conventional character conversion as per +CSCS.

<pos_meas_req>: string type in UTF-8. This parameter provides an XML-formatted string of position measurements request data as defined in table 8.55-9. This is an alternative to <pos_meas>. This parameter shall not be subject to conventional character conversion as per +CSCS.

<GPS_meas>: string type in UTF-8. This parameter provides an XML-formatted string of GPS measurement data as defined in table 8.55-10. This parameter shall not be subject to conventional character conversion as per +CSCS.

<OTDOA_meas>: string type in UTF-8. This parameter provides an XML-formatted string of OTDOA measurement data as defined in table 8.55-20. This parameter shall not be subject to conventional character conversion as per +CSCS.

<GNSS_meas>: string type in UTF-8. This parameter provides an XML-formatted string of GPS measurement data as defined in table 8.55-11 for LPP procedures and GANSS procedures in RRLP and RRC. This parameter shall not be subject to conventional character conversion as per +CSCS.

<GPS_assist_req>: string type in UTF-8. This parameter provides an XML-formatted string for requesting GPS assistance data as defined in table 8.55-12. This parameter shall not be subject to conventional character conversion as per +CSCS.

<GNSS_assist_req>: string type in UTF-8. This parameter provides an XML-formatted string for requesting GNSS assistance data as defined in table 8.55-15. This parameter shall not be subject to conventional character conversion as per +CSCS.

<OTDOA_assist_req>: string type in UTF-8. This parameter provides an XML-formatted string for requesting OTDOA assistance data as defined in table 8.55-21. This parameter shall not be subject to conventional character conversion as per +CSCS.

<capability_req> string type in UTF-8. This parameter provides an XML-formatted string for requesting capability data as defined in table 8.55-4. This parameter shall not be subject to conventional character conversion as per +CSCS.

<capabilities> string type in UTF-8. This parameter provides an XML-formatted string for providing capability data as defined in table 8.55-4. This parameter shall not be subject to conventional character conversion as per +CSCS.

<msg>: string type in UTF-8. This parameter provides an XML-formatted string for communicating simple messages as defined in table 8.55-13. This parameter shall not be subject to conventional character conversion as per +CSCS.

<pos_err>: string type in UTF-8. This parameter provides an XML-formatted string of positioning error parameters as defined in table 8.55-14. This parameter shall not be subject to conventional character conversion as per +CSCS.

<reset_assist_data>: string type in UTF-8. This parameter provides an XML-formatted string for resetting GNSS assistance data as defined in table 8.55-22. This parameter shall not be subject to conventional character conversion as per +CSCS.

NOTE 1: An XML-formatted string intended for +CPOS can be split e.g. in order to prevent that the string becomes too long. Where to split an XML-formatted string is implementation specific.

Table 8.55-2: XML DTD for <pos>

```
<?xml version="1.0" ?>
<!DOCTYPE pos[
<!ELEMENT pos
(location|GNSS_provided_location_information|assist_data|pos_meas|pos_meas_req|G
PS_meas|OTDOA_meas|GNSS_meas*|GPS_assist_req|GNSS_assist_req|OTDOA_assist_req|ca
pability_req|capabilities|msg|pos_err|reset_assist_data)>
   <!ATTLIST pos protocol (RRLP|RRC|LPP) #IMPLIED
   transaction_id CDATA #IMPLIED>
]>
```

NOTE 2: The XML DTD for 'pos' is the top-level definition of all positioning events, containing elements going in both directions between the MS and the network. The subelements of 'pos' are superset definitions of the positioning events. A variable amount of these elements can be sent. Sent elements must follow the rules for the XML, e.g. elements postfixed by '?' can occur zero or more times. The total delivery must be a complete specification. Sub-elements cannot be delivered without being preceeded with an element reference from the above level.

Table 8.55-3: XML DTD for <location>

```
<!ELEMENT location (location_parameters,time_of_fix?,time_assistance?)>
   <!ELEMENT time_of_fix (#PCDATA)>
   <!ELEMENT time_assistance
(GPS_time,(GSM_time|WCDMA_time|LTE_time)?,TimeUnc?,Strobe?)>
```

NOTE 3: The element 'location_parameters' provides one or more XML-formatted strings of GAD-shape positioning data as defined in table 8.50-2.

NOTE 3a: The elements 'time_of_fix' of 'location' and 'time' of 'location_parameters' (see Table 8.50-2) are both for holding time-stamp of the location information. Due to this, the parameter 'time_of_fix' can be omitted when 'time' is present or vice versa.

Table 8.55-4: XML DTD for <capability_req>, <capabilities>

```
<!ELEMENT capability_req EMPTY>

<!ELEMENT capabilities
(GPS_method?,GNSS_method*,GPS_aid?,GNSS_aid?,OTDOA_capability?)>
   <!ELEMENT GPS_Method (MSA_sup?,MSB_sup?,Standalone_sup?)>
      <!ELEMENT MSA_sup EMPTY>
```

```
         <!ATTLIST MSA_sup fta_sup CDATA "000">  <!-- as LPP fta-MeasSupport -->
      <!ELEMENT MSB_sup EMPTY>
         <!ATTLIST MSB_sup fta_sup CDATA "000"
         velocity_sup (true|false) "false">
      <!ELEMENT Standalone_sup EMPTY>
         <!ATTLIST Standalone_sup fta_sup CDATA "000"
         <!-- as LPP fta-MeasSupport -->
         velocity_sup (true|false) "false">
   <!ELEMENT GNSS_Method (MSA_sup?,MSB_sup?,Standalone_sup?)>
      <!ATTLIST GNSS_Method supported_signal
(GPS_L1|GPS_L1C|GPS_L2C|GPS_L5|SBAS_L1|GLO_G1|GLO_G2|GLO_G3) "GPS_L1">
   <!ELEMENT GPS_aid
(almanac_sup?,UTC_model_sup?,ionospheric_sup?,nav_model_sup?,DGPS_sup?,ref_loc_s
up?,ref_time_sup?,acquisition_sup?,rt_integr_sup?)>
      <!ELEMENT almanac_sup EMPTY>
      <!ELEMENT UTC_model_sup EMPTY>
      <!ELEMENT ionospheric_sup EMPTY>
      <!ELEMENT nav_model_sup EMPTY>
      <!ELEMENT DGPS_sup EMPTY>
      <!ELEMENT ref_loc_sup EMPTY>
      <!ELEMENT ref_time_sup EMPTY>
      <!ELEMENT acquisition_sup EMPTY>
      <!ELEMENT rt_integr_sup EMPTY>
   <!ELEMENT GNSS_aid (ionospheric_sup?,ref_loc_sup?,ref_time_sup?,earth_orient_
sup?,GNSS_aid_for_one_gnss*)>
      <!ELEMENT earth_orient_sup EMPTY>
      <!ELEMENT GNSS_aid_for_one_gnss
(orbit_sup*,clock_sup*,acquisition_sup?,rt_integr_sup?)>
         <!ATTLIST GNSS_aid_for_one_gnss
         gnss_id (SBAS|MGPS|QZSS|Glonass|GPS) #IMPLIED
         sbas_id (WASS|EGNOS|MSAS|GAGAN) #IMPLIED>
         <!ELEMENT orbit_sup EMPTY>
            <!ATTLIST orbit_sup model (2|3|4|5) #REQUIRED>
            <!-- 2=GPS NAV, 3=GPS CNAV, 4=Glonass, 5=SBAS -->
         <!ELEMENT clock_sup EMPTY>
            <!ATTLIST clock_sup model (2|3|4|5) #REQUIRED>
   <!ELEMENT OTDOA_capability (otdoa_mode,supported_band_list_EUTRA+)
      <!ELEMENT otdoa_mode #PCDATA>  <!-- Integer corresponds to bit string 1-8
where bit at position if set, means particular OTDOA mode is supported -->
      <!ELEMENT supported_band_list_EUTRA (band_EUTRA,half_duplex)>
         <!ELEMENT band_EUTRA (#PCDATA)>  <!-- 1..64 -->
         <!ELEMENT half_duplex EMPTY>
            <!ATTLIST half_duplex literal (true|false) #REQUIRED>
```

Table 8.55-5: XML DTD for <assist_data>

```
<!ELEMENT assist_data
(GPS_assist?,GNSS_assist?,msr_assist_data?,system_info_assist_data?,more_assist_
data?,ext_container?,rel98_assist_data_ext?,rel5_assist_data_ext?,rel7_assist_da
ta_ext?,OTDOA_assist_data?)>
   <!ELEMENT GPS_assist
(status_health?,BTS_clock_drift?,ref_time*,location_parameters?,DGPS_corrections
?,nav_model_elem*,ionospheric_model?,UTC_model?,almanac?,acqu_assist*,GPS_rt_int
egrity?)>
      <!ELEMENT status_health (#PCDATA)>
      <!ELEMENT BTS_clock_drift (#PCDATA)>
      <!ELEMENT ref_time
(GPS_time|GNSS_time),(GSM_time|WCDMA_time|LTE_time)?,TimeUnc?,Strobe?,GPS_TOW_as
sist*)>
         <!ELEMENT GPS_time (GPS_TOW_msec,GPS_week)>
            <!ELEMENT GPS_TOW_msec (#PCDATA)>
```

```
            <!ELEMENT GPS_week (#PCDATA)>
         <!ELEMENT GPS_TOW_assist (sat_id,tlm_word,anti_sp,alert,tlm_res)>
            <!ELEMENT sat_id (#PCDATA)>
            <!ELEMENT tlm_word (#PCDATA)>
            <!ELEMENT anti_sp (#PCDATA)>
            <!ELEMENT alert (#PCDATA)>
            <!ELEMENT tlm_res (#PCDATA)>
      <!ELEMENT DGPS_corrections
(sat_id,IODE,UDRE,PRC,RRC,delta_PRC2?,delta_RRC2?)>
         <!ELEMENT IODE (#PCDATA)>
         <!ELEMENT UDRE (#PCDATA)>
         <!ELEMENT PRC (#PCDATA)>
         <!ELEMENT RRC (#PCDATA)>
         <!ELEMENT delta_PRC2 (#PCDATA)>
         <!ELEMENT delta_RRC2 (#PCDATA)>
      <!ELEMENT nav_model_elem (sat_id,sat_status,ephem_and_clock?)>
         <!ELEMENT sat_status EMPTY>
            <!ATTLIST sat_status literal (NS_NN-U|ES_NN-U|NS_NN|ES_SN|REVD)
#REQUIRED>
         <!ELEMENT ephem_and_clock
(l2_code,ura,sv_health,iodc,l2p_flag,esr1,esr2,esr3,esr4,tgd,toc,af2,af1,af0,crs
,delta_n,m0,cuc,ecc,cus,power_half,toe,fit_flag,aoda,cic,omega0,cis,i0,crc,omega
,omega_dot,idot,derived?)>
            <!ELEMENT l2_code (#PCDATA)>
            <!ELEMENT ura (#PCDATA)>
            <!ELEMENT sv_health (#PCDATA)>
            <!ELEMENT iodc (#PCDATA)>
            <!ELEMENT l2p_flag (#PCDATA)>
            <!ELEMENT esr1 (#PCDATA)>
            <!ELEMENT esr2 (#PCDATA)>
            <!ELEMENT esr3 (#PCDATA)>
            <!ELEMENT esr4 (#PCDATA)>
            <!ELEMENT tgd (#PCDATA)>
            <!ELEMENT toc (#PCDATA)>
            <!ELEMENT af2 (#PCDATA)>
            <!ELEMENT af1 (#PCDATA)>
            <!ELEMENT af0 (#PCDATA)>
            <!ELEMENT crs (#PCDATA)>
            <!ELEMENT delta_n (#PCDATA)>
            <!ELEMENT m0 (#PCDATA)>
            <!ELEMENT cuc (#PCDATA)>
            <!ELEMENT ecc (#PCDATA)>
            <!ELEMENT cus (#PCDATA)>
            <!ELEMENT power_half (#PCDATA)>
            <!ELEMENT toe (#PCDATA)>
            <!ELEMENT fit_flag (#PCDATA)>
            <!ELEMENT aoda (#PCDATA)>
            <!ELEMENT cic (#PCDATA)>
            <!ELEMENT omega0 (#PCDATA)>
            <!ELEMENT cis (#PCDATA)>
            <!ELEMENT i0 (#PCDATA)>
            <!ELEMENT crc (#PCDATA)>
            <!ELEMENT omega (#PCDATA)>
            <!ELEMENT omega_dot (#PCDATA)>
            <!ELEMENT idot (#PCDATA)>
            <!ELEMENT derived EMPTY>  <!-- data derived locally, e.g from EE -->
      <!ELEMENT ionospheric_model
(alfa0,alfa1,alfa2,alfa3,beta0,beta1,beta2,beta3)>
         <!ELEMENT alfa0 (#PCDATA)>
         <!ELEMENT alfa1 (#PCDATA)>
         <!ELEMENT alfa2 (#PCDATA)>
         <!ELEMENT alfa3 (#PCDATA)>
```

```
         <!ELEMENT beta0 (#PCDATA)>
         <!ELEMENT beta1 (#PCDATA)>
         <!ELEMENT beta2 (#PCDATA)>
         <!ELEMENT beta3 (#PCDATA)>
      <!ELEMENT UTC_model (a1,a0,tot,wnt,dtls,wnlsf,dn,dtlsf)>
         <!ELEMENT a1 (#PCDATA)>
         <!ELEMENT a0 (#PCDATA)>
         <!ELEMENT tot (#PCDATA)>
         <!ELEMENT wnt (#PCDATA)>
         <!ELEMENT dtls (#PCDATA)>
         <!ELEMENT wnlsf (#PCDATA)>
         <!ELEMENT dn (#PCDATA)>
         <!ELEMENT dtlsf (#PCDATA)>
      <!ELEMENT almanac (wna,alm_elem*)>
         <!ELEMENT wna (#PCDATA)>
         <!ELEMENT alm_elem
(data_id?,sat_id,alm_ecc,alm_toa,alm_ksii,alm_omega_dot,alm_sv_health,alm_power_
half,alm_omega0,alm_omega,alm_m0,alm_af0,alm_af1)>
            <!ELEMENT data_id (#PCDATA)>
            <!ELEMENT alm_ecc (#PCDATA)>
            <!ELEMENT alm_toa (#PCDATA)>
            <!ELEMENT alm_ksii (#PCDATA)>
            <!ELEMENT alm_omega_dot (#PCDATA)>
            <!ELEMENT alm_sv_health (#PCDATA)>
            <!ELEMENT alm_power_half (#PCDATA)>
            <!ELEMENT alm_omega0 (#PCDATA)>
            <!ELEMENT alm_omega (#PCDATA)>
            <!ELEMENT alm_m0 (#PCDATA)>
            <!ELEMENT alm_af0 (#PCDATA)>
            <!ELEMENT alm_af1 (#PCDATA)>
      <!ELEMENT GPS_rt_integrity (#PCDATA)>
   <!ELEMENT msr_assist_data EMPTY>
   <!ELEMENT system_info_assist_data EMPTY>
   <!ELEMENT more_assist_data EMPTY>
   <!ELEMENT ext_container EMPTY>
   <!ELEMENT rel98_assist_data_ext EMPTY>
   <!ELEMENT rel5_assist_data_ext EMPTY>
   <!ELEMENT rel7_assist_data_ext EMPTY>
   <!ELEMENT OTDOA_assist_data
(OTDOA_ref_cell_info,OTDOA_neighbour_cell_info_list)>
      <!ELEMENT OTDOA_ref_cell_info
(phys_cell_id,cell_global_id,earfcn_ref?,antenna_port_conf?,cp_length,prs_info?)
>
         <!ELEMENT phys_cell_id (#PCDATA)>  <!-- 0..503 -->
         <!ELEMENT cell_global_id (plmn_identity,cell_identity)>
            <!ELEMENT plmn_identity (mcc,mnc)>
               <!ELEMENT mcc (#PCDATA)>
               <!ELEMENT mnc (#PCDATA)>
            <!ELEMENT cell_identity #PCDATA>  <!-- 32-bit extended UTRAN cell ID;
in case the cell ID is shorter, the most significant bits are set to 0. -->
         <!ELEMENT earfcn_ref (#PCDATA)>  <!-- 0..65535 -->
         <!ELEMENT antenna_port_conf EMPTY>
            <!ATTLIST antenna_port_conf ports(ports1-or-2|ports4) "ports1-or-2">
         <!ELEMENT cp_length EMPTY>
            <!ATTLIST cp_length literal(normal|extended) #REQUIRED>
         <!ELEMENT prs_info
(prs_bandwidth,prs_conf_index,num_dl_frames,prs_muting_info_r9?)>
            <!ELEMENT prs_bandwidth EMPTY>
               <!ATTLIST prs_bandwidth literal(n6|n15|n25|n50|n75|n100)>
            <!ELEMENT prs_conf_index (#PCDATA)>  <!-- 0..4095 -->
            <!ELEMENT num_dl_frames EMPTY>
               <!ATTLIST num_dl_frames literal(sf-1|sf-2|sf-4|sf-6)#REQUIRED>
```

```
            <!ELEMENT prs_muting_info_r9 muting_info>
               <!ATTLIST prs_muting_info_r9 literal(po2-r9|po4-r9|po8-r9|po16-
r9) #REQUIRED>
               <!ELEMENT muting_info (#PCDATA)>
      <!ELEMENT OTDOA_neighbour_cell_info_list (OTDOA_neighbour_freq_info)+>
         <!ELEMENT OTDOA_neighbour_freq_info
(OTDOA_neighbour_cell_info_element)+>
            <!ELEMENT OTDOA_neighbour_cell_info_element
(phys_cell_id,cell_global_id?,earfcn?,cp_length?,prs_info?,antenna_port_conf?,sl
ot_number_offset?,prs_subframe_offset?,expected_RSTD,expected_RSTD_uncertainty)>
               <!ELEMENT phys_cell_id (#PCDATA)>  <!-- 0..503 -->
               <!ELEMENT cell_global_id (#PCDATA)>
               <!ELEMENT earfcn (#PCDATA)>  <!-- 0..65535 -->
               <!ELEMENT cp_length EMPTY>
                  <!ATTLIST cp_length literal(normal|extended) #REQUIRED>
               <!ELEMENT prs_info
(prs_bandwidth,prs_conf_index,num_dl_frames,prs_muting_info_r9?)>
                  <!ELEMENT prs_bandwidth EMPTY>
                     <!ATTLIST prs_bandwidth literal(n6|n15|n25|n50|n75|n100)>
                  <!ELEMENT prs_conf_index (#PCDATA)>  <!-- 0..4095 -->
                  <!ELEMENT num_dl_frames EMPTY>
                     <!ATTLIST num_dl_frames literal(sf-1|sf-2|sf-4|sf-
6)#REQUIRED>
                  <!ELEMENT prs_muting_info_r9 muting_info>
                     <!ATTLIST prs_muting_info_r9 literal(po2-r9|po4-r9|po8-
r9|po16-r9) #REQUIRED>
                     <!ELEMENT muting_info (#PCDATA)>
               <!ELEMENT antenna_port_conf EMPTY>
                  <!ATTLIST antenna_port_conf ports(ports1-or-2|ports4) "ports1-
or-2">
               <!ELEMENT slot_number_offset (#PCDATA)>  <!-- 0..19 -->
               <!ELEMENT prs_subframe_offset (#PCDATA)>  <!-- 0..1279 -->
               <!ELEMENT expected_RSTD (#PCDATA)>  <!-- 0..16383 -->
               <!ELEMENT expected_RSTD_uncertainty (#PCDATA)>  <!-- 0..1023 -->
```

NOTE 4: For the elements and the value ranges of assistance data information delivered from the network, refer to 3GPP TS 25.331 [74] (subclause 10.3.7.90), 3GPP TS 36.355 [115] (subclause 6.5.1) and 3GPP TS 44.031 [79] (subclause A.4.2.4). The value ranges of the relevant parameters are described in the ASN.1 syntax.

NOTE 5: For the element `'location_parameters'`, see table 8.50-2. In the context of this XML, the `'location_parameters'` will describe a reference location.

NOTE 6: The elements ext_container, rel98_assist_data_ext, rel5_assist_data_ext and rel7_assist_data_ext are depreciated.

Table 8.55-6: XML DTD for <GSM_time>,<WCDMA_time>,<LTE_time>,<TimeUnc>,<Strobe>

```
<!ELEMENT GSM_time
(frame_number,frame_number_msb,time_slot_number,bit_number,BCCH_carrier?,BSIC?)>
   <!ELEMENT frame_number (#PCDATA)>
   <!ELEMENT frame_number_msb (#PCDATA)>
   <!ELEMENT time_slot_number (#PCDATA)>
   <!ELEMENT bit_number (#PCDATA)>
   <!ELEMENT BCCH_carrier (#PCDATA)>
   <!ELEMENT BSIC (#PCDATA)>

<!ELEMENT WCDMA_time (cell_timing_chips,(FDD_CPICH|TDD_cell_id|SFN))>
   <!ELEMENT cell_timing_chips (#PCDATA)>
   <!ELEMENT FDD_CPICH (#PCDATA)>
   <!ELEMENT TDD_cell_id (#PCDATA)>
   <!ELEMENT SFN (#PCDATA)>
```

```
<!ELEMENT LTE_time (physCellId,cellGlobalIdEUTRA?,earfcn)>
   <!ELEMENT physCellId (#PCDATA)>
   <!ELEMENT cellGlobalIdEUTRA (#PCDATA)>
   <!ELEMENT earfcn (#PCDATA)>

<!ELEMENT TimeUnc EMPTY>
   <!ATTLIST TimeUnc
   Value CDATA "127"
   units (s|ms|us|rrlp_k|rrc_k|lpp_k) "rrc_k">

<!ELEMENT Strobe (EMPTY)>  <!-- the GPS time relates to a strobe generated by
the modem -->
```

Table 8.55-7: XML DTD for <acqu_assist>

```
<!ELEMENT acqu_assist (tow_msec,sat_info*)>
   <!ELEMENT tow_msec (#PCDATA)>
   <!ELEMENT sat_info
(sat_id,dopl0,dopl_extra?,code_ph,code_ph_int,GPS_bitno,srch_w,az_el?)>
      <!ELEMENT dopl0 (#PCDATA)>
         <!ATTLIST dopl0 units (rrlp|rrc|lpp|Hz|mps) "rrlp">
         <!-- rrlp gps is 2.5 Hz -->
         <!-- rrc  gps is 2.5 Hz -->
         <!-- lpp  gnss is 0.5 m/s -->
      <!ELEMENT dopl_extra (dopl1,dopl1_uncert)>
         <!ELEMENT dopl1 (#PCDATA)>
            <!ATTLIST dopl1 units (rrlp|rrc|lpp) "rrlp">
            <!-- rrlp is 1/42 Hz/s -->
            <!-- rrc  is 0.023 Hz/s -->
            <!-- lpp  is 1/210 m/s/s -->
         <!ELEMENT dopl1_uncert EMPTY>
            <!ATTLIST dopl1_uncert literal (hz12-
5|hz25|hz50|hz100|hz200) #REQUIRED>
      <!ELEMENT code_ph (#PCDATA)>
         <!ATTLIST code_ph units (chips|ms) "chips">
         <!-- chips used for GPS in RRLP and RRC, ms used for LPP -->
      <!ELEMENT code_ph_int (#PCDATA)>
      <!ELEMENT GPS_bitno (#PCDATA)>
      <!ELEMENT srch_w (#PCDATA)>
      <!ELEMENT az_el (az,elev)>
         <!ELEMENT az (#PCDATA)>
            <!ATTLIST az_el units (rrlp|lpp|degree) "rrlp">
            <!-- rrlp and rrc have units of 11.25 degree -->
            <!-- lpp has units of 0.703125 degrees -->
         <!ELEMENT elev (#PCDATA)>
```

NOTE 7: Units of mps, lpp and ms are used with GNSS procedures.

Table 8.55-8: XML DTD for <pos_meas>

```
<!ELEMENT pos_meas (meas_abort|RRLP_meas|RRC_meas)>
   <!ELEMENT meas_abort EMPTY>
   <!ELEMENT RRLP_meas (RRLP_pos_instruct)>
      <!ELEMENT RRLP_pos_instruct
(RRLP_method_type,RRLP_method,resp_time_seconds,mult_sets)>
         <!ELEMENT RRLP_method_type
(ms_assisted|ms_assisted_no_accuracy|ms_based|ms_based_pref|ms_assisted_pref)>
            <!ELEMENT ms_assisted (method_accuracy)>
               <!ELEMENT method_accuracy (#PCDATA)>
```

```
            <!ELEMENT ms_assisted_no_accuracy EMPTY>
            <!ELEMENT ms_based (method_accuracy)>
            <!ELEMENT ms_based_pref (method_accuracy)>
            <!ELEMENT ms_assisted_pref (method_accuracy)>
         <!ELEMENT RRLP_method EMPTY>
            <!ATTLIST RRLP_method literal (gps) #REQUIRED>
         <!ELEMENT resp_time_seconds (#PCDATA)>
         <!ELEMENT mult_sets EMPTY>
            <!ATTLIST mult_sets literal (multiple|one) #REQUIRED>
   <!ELEMENT RRC_meas (rep_quant,rep_crit)>
      <!ELEMENT rep_quant (RRC_method_type,RRC_method,hor_acc?,vert_acc?)>
         <!ATTLIST rep_quant
         gps_timing_of_cell_wanted (true|false) "false"
         addl_assist_data_req      (true|false) #REQUIRED>
         <!ELEMENT RRC_method_type EMPTY>
            <!ATTLIST RRC_method_type literal
(ue_assisted|ue_based|ue_based_pref|ue_assisted_pref) #REQUIRED>
         <!ELEMENT RRC_method EMPTY>
            <!ATTLIST RRC_method literal (otdoa|gps|otdoaOrGPS|cellID)
#REQUIRED>
         <!ELEMENT hor_acc (#PCDATA)>
         <!ELEMENT vert_acc (#PCDATA)>
      <!ELEMENT rep_crit (no_rep|event_rep_crit|period_rep_crit)>
         <!ELEMENT no_rep EMPTY>
         <!ELEMENT event_rep_crit (event_par*)>
            <!ELEMENT event_par (rep_amount,meas_interval,event_specific_info?)>
                  <!ATTLIST event_par report_first_fix (true|false) #REQUIRED>
               <!ELEMENT rep_amount EMPTY>
                     <!ATTLIST rep_amount literal
(ra1|ra2|ra4|ra8|ra16|ra32|ra64|ra-Infinity) #REQUIRED>
               <!ELEMENT meas_interval EMPTY>
                     <!ATTLIST meas_interval literal
(e5|e15|e60|e300|e900|e1800|e3600|e7200) #REQUIRED>
               <!ELEMENT event_specific_info
(tr_pos_chg|tr_SFN_SFN_chg|tr_SFN_GPS_TOW)>
                  <!ELEMENT tr_pos_chg EMPTY>
                     <!ATTLIST tr_pos_chg literal
(pc10|pc20|pc30|pc40|pc50|pc100|pc200|pc300|pc500|pc1000|pc2000|pc5000|pc10000|p
c20000|pc50000|pc100000) #REQUIRED>
                  <!ELEMENT tr_SFN_SFN_chg EMPTY>
                        <!ATTLIST tr_SFN_SFN_chg literal (c0-25|c0-
5|c1|c2|c3|c4|c5|c10|c20|c50|c100|c200|c500|c1000|c2000|c5000) #REQUIRED>
                  <!ELEMENT tr_SFN_GPS_TOW EMPTY>
                        <!ATTLIST tr_SFN_GPS_TOW literal
(ms1|ms2|ms3|ms5|ms10|ms20|ms50|ms100)  #REQUIRED>
         <!ELEMENT period_rep_crit EMPTY>
               <!ATTLIST period_rep_crit rep_amount
(ra1|ra2|ra4|ra8|ra16|ra32|ra64|ra-Infinity) "ra-Infinity">
               <!ATTLIST period_rep_crit rep_interval_long (ril0|ril0-25|ril0-
5|ril1|ril2|ril3|ril4|ril6|ril8|ril12|ril16|ril20|ril24|ril28|ril32|ril64)
#REQUIRED>
```

NOTE 8: For the elements and the value ranges of position measurements data, refer to 3GPP TS 25.331 [74] (subclause 10.3.7.100) and 3GPP TS 44.031 [79] (subclause A.2). The value ranges of the relevant parameters are described in the ASN.1 syntax.

Table 8.55-9: XML DTD for <pos_meas_req>

```
<!-- Alternative to pos_meas, supports RRLP, RRC and LPP -->
<!ELEMENT pos_meas_req (abort|(req_info,qos))>
```

```
   <!ATTLIST pos_meas_req aid_req_allowed (yes|no) #IMPLIED>  <!-- Present for
RRC and LPP procedures -->
   <!ELEMENT abort EMPTY)>
   <!ELEMENT req_info (GNSS_allowed_methods?)>
      <!ATTLIST req_info loc_info_type
(loc_req|meas_req|loc_pref|MSB_req|MSA_req|MSB_pref|MSA_pref) "loc_req"
      velocity_req (true|false) "false"
      time_req (true|false) "false"
      multiple_sets (yes|no) "no"
      additional_info (yes|no) "no" >  <!-- lpp only -->  <!-- MSB synonomous
with loc_req -->
      <!ELEMENT GNSS_allowed_methods
(gps_method?,sbas_method?,qzss_method?,glonass_method?) >
         <!ELEMENT gps_method EMPTY>
         <!ELEMENT sbas_method EMPTY>
         <!ELEMENT qzss_method EMPTY>
         <!ELEMENT glonass_method EMPTY>
   <!ELEMENT qos (response_time?,(reporting_interval,amount)?,hacc,vacc?)>
   <!-- The presence of reporting_interval implies a periodic procedure -->
   <!-- The absence of reporting_interval implies a onehot procedure -->
      <!ELEMENT response_time EMPTY>
         <!ATTLIST response_time
         sec CDATA #IMPLIED
         rt_exp (rt1|rt2|rt4|rt8|rt16|rt32|rt64|rt128) #IMPLIED>  <!-- sec
optional in RRLP, LPP -->
      <!ELEMENT reporting_interval EMPTY>
         <!ATTLIST reporting_interval
         ri_exp
(ril1|ril2|ril3|ril4|ril6|ril8|ril12|ril16|ril20|ril24|ril28|ril32|ril64)
"ril20" >
      <!ELEMENT amount EMPTY>
         <!ATTLIST amount amount (ra1|ra2|ra4|ra8|ra16|ra32|ra64|ra-Infinity)
"ra-Infinity">
      <!ELEMENT hacc EMPTY>
         <!ATTLIST hacc
         accuracy_k CDATA #IMPLIED
         accuracy_m CDATA #IMPLIED
         confidence CDATA #IMPLIED>
      <!ELEMENT vacc EMPTY>
         <!ATTLIST vacc
         accuracy_k CDATA #IMPLIED
         accuracy_m CDATA #IMPLIED
         confidence CDATA #IMPLIED>
```

Table 8.55-10: XML DTD for <GPS_meas>

```
<!ELEMENT GPS_meas (ref_time_only,meas_params*)>
   <!ELEMENT ref_time_only (tow_msec)>
   <!ELEMENT meas_params
(sat_id,carr2_noise,dopl,whole_chips,fract_chips,multi_path,psr_rms_err)>
      <!ELEMENT carr2_noise (#PCDATA)>
      <!ELEMENT dopl (#PCDATA)>
      <!ELEMENT whole_chips (#PCDATA)>
      <!ELEMENT fract_chips (#PCDATA)>
      <!ELEMENT multi_path EMPTY>
         <!ATTLIST multi_path literal (not_measured|low|medium|high) #REQUIRED>
      <!ELEMENT psr_rms_err (#PCDATA)>
```

NOTE 9: For the elements and the value ranges of GPS measurement data, refer to 3GPP TS 25.331 [74] (subclause 10.3.7.93) and 3GPP TS 44.031 [79] (subclause A.3.2.5). The value ranges of the relevant parameters are described in the ASN.1 syntax.

Table 8.55-11: XML DTD for <GNSS_meas>

```
<!ELEMENT GNSS_meas (sat_meas_params_gnss*,TOD_ms)>
   <!ATTLIST GNSS_meas gnss_id GPS|SBAS|QZSS|Galileo|Glonass) "GPS">
   <!ELEMENT sat_meas_params_gnss
(sat_id,code_phase_ambiguity?,carr2_noise,doppler_mps?,code_phase_ms,integer_cod
e_phase?,multi_path,psr_rms_err,adr?)>
      <!ATTLIST sat_meas_params_gnss measured_signal (GPS_L1|GPS_L1C|GPS_L2C|GPS
_L5|SBAS_L1|GLO_G1|GLO_G2|GLO_G3) "GPS_L1">
      <!ELEMENT code_phase_ambiguity (#PCDATA)>  <!-- 0..127  -->
      <!ELEMENT doppler_mps (#PCDATA)>  <!-- m/s Range -32768..32767 -->
      <!ELEMENT code_phase_ms (#PCDATA)>  <!-- ms  Range 0..2097151 -->
      <!ELEMENT integer_code_phase (#PCDATA)>
      <!ELEMENT adr (#PCDATA)>
   <!ELEMENT TOD_ms (#PCDATA)> <!-- time of day in ms in decimal to 5 decimal
places. Format #######.##### -->
      <!ATTLIST TOD_ms gnss_time_id (GPS|Glonass|QZSS) "GPS">
```

NOTE 10: 'GNSS_meas' is used for reporting measurements results for GNSS procedures i.e. procedures where: 'GNSS_allowed_methods', 'GNSS_assist' was received or where 'acqu_assist' uses units of ms.

NOTE 10a: 'TOD_ms' can be provided by the TE only once for all occurances of 'gnss_id', refer to 3GPP TS 36.355 [115] (subclause 6.5.2.6). Usage of the element 'GNSS_meas' in 'GNSS_provided_location_information' can be omitted as 'GNSS_meas' is already present in 'pos'.

Table 8.55-12: XML DTD for <GPS_assist_req>

```
<!ELEMENT GPS_assist_req  (nav_addl_data?)>
   <!ATTLIST GPS_assist_req
   alm_req        (true|false) "false"
   UTC_model_req  (true|false) "false"
   ion_req        (true|false) "false"
   nav_model_req  (true|false) "false"
   DGPS_corr_req  (true|false) "false"
   ref_loc_req    (true|false) "false"
   ref_time_req   (true|false) "false"
   aqu_assist_req (true|false) "false"
   rt_integr_req  (true|false) "false">
   <!ELEMENT nav_addl_data (GPS_week,GPS_toe,ttoe_limit,addl_req_sat*)>
      <!ELEMENT GPS_toe (#PCDATA)>
      <!ELEMENT ttoe_limit (#PCDATA)>
      <!ELEMENT addl_req_sat (sat_id,iode)>
         <!ELEMENT iode (#PCDATA)>
```

NOTE 11: For requesting assistance data, refer to 3GPP TS 25.331 [74] (subclause 10.3.7.88a) and 3GPP TS 49.031 [80] (subclause 10.10).

Table 8.55-13: XML DTD for <msg>

```
<!ELEMENT msg EMPTY>
   <!ATTLIST msg status (assist_data_delivered) #REQUIRED>
```

NOTE 12: 'assist_data_delivered' can be used as an indication of completion of provision of assistance data.

Table 8.55-14: XML DTD for <pos_err>

```
<!ELEMENT pos_err (err_reason, GPS_assist_req?)>
   <!ELEMENT err_reason_EMPTY>
      <!ATTLIST err_reason literal
(undefined_error|not_enough_gps_satellites|gps_assist_data_missing) #REQUIRED>
```

NOTE 13: For reporting positioning error, refer to 3GPP TS 25.331 [74] (subclause 10.3.7.87) and 3GPP TS 44.031 [79] (subclause A.3.2.6).

Table 8.55-15: XML DTD for GNSS Aid

```
<!ELEMENT GNSS_assist
(GNSS_ref_time?,GNSS_ref_location?,GNSS_ref_measurment_assist?,GNSS_ionospheric_
model?,GNSS_earth_orient_param?,GNSS_additional_ion_model?,GNSS_time_model,GNSS_
nav_model?,GNSS_integrity?,acqu_assist*)>
   <!ATTLIST GNSS_assist
   gnss_id (SBAS|MGPS|QZSS|Glonass|GPS) #IMPLIED
   sbas_id (WASS|EGNOS|MSAS|GAGAN) #IMPLIED>

<!ELEMENT GNSS_ref_time (GNSS_day,GNSS_TOD_s,notification_leap_sec)>
   <!ATTLIST GNSS_ref_time gnss_time_id (GPS|Glonass|QZSS) #REQUIRED>
   <!ELEMENT GNSS_day (#PCDATA)>
   <!ELEMENT GNSS_TOD_s (#PCDATA)>  <!-- seconds -->
   <!-- 0..86399 for RRLP; 0.000 to 86399.999 for LPP with ms -->
   <!-- TOD Uncertainty presented in TimeUnc -->
   <!ELEMENT notification_leap_sec (#PCDATA) >  <!-- hex LPP only -->

<!ELEMENT GNSS_ref_location (location_parameters)>

<!ELEMENT GNSS_ref_measurment_assist (acqu_assist)>

<!ELEMENT GNSS_ionospheric_model
(gnss_ion_ai0,gnss_ion_ai1,gnss_ion_ai2,gnss_ion_flags?)>
   <!ELEMENT gnss_ion_ai0 (#PCDATA)>  <!-- range 0..4095 -->
   <!ELEMENT gnss_ion_ai1 (#PCDATA)>  <!-- range 0..4095 -->
   <!ELEMENT gnss_ion_ai2 (#PCDATA)>  <!-- range 0..4095 -->
   <!ELEMENT gnss_ion_flags EMPTY>
      <!ATTLIST gnss_ion_flags
      storm_flag1 (0|1) "0"
      storm_flag2 (0|1) "0"
      storm_flag3 (0|1) "0"
      storm_flag4 (0|1) "0"
      storm_flag5 (0|1) "0">

<!ELEMENT GNSS_earth_orient_param
(gnss_eop_teop,gnss_eop_pmX,gnss_eop_pmX_d,gnss_eop_pmY,gnss_eop_pmY_d,gnss_eop_
deltaUT1,gnss_eop_deltaUT1_d)>
   <!ELEMENT gnss_eop_teop (#PCDATA)>  <!-- range 0..65535 -->
   <!ELEMENT gnss_eop_pmX (#PCDATA)>  <!-- range -1048576..1048575 -->
   <!ELEMENT gnss_eop_pmX_d (#PCDATA)>  <!-- range -16384..16383 -->
   <!ELEMENT gnss_eop_pmY (#PCDATA)>  <!-- range -1048576..1048575 -->
   <!ELEMENT gnss_eop_pmY_d (#PCDATA)>  <!-- range -16384..16383 -->
   <!ELEMENT gnss_eop_deltaUT1 (#PCDATA)> <!-- range -1073741824..1073741823 -->
   <!ELEMENT gnss_eop_deltaUT1_d (#PCDATA)>  <!-- range -262144..262143 -->

<!ELEMENT GNSS_additional_ion_model (ionospheric_model)>
   <!ATTLIST GNSS_additional_ion_model
```

```
   ion_model_data_id (00|11) "00">  <!-- from rrlp 11=QZSS 00=other -->

<!ELEMENT GNSS_time_model (tme_ref_time,tme_A0,tme_A1?,tme_A2?,tme_week?)>
   <!ATTLIST GNSS_time_model gnss_time_id (GPS|Glonass|QZSS) #REQUIRED>
   <!ELEMENT tme_ref_time (#PCDATA)>  <!-- sec scale 2**4 -->
   <!ELEMENT tme_A0 (#PCDATA)>  <!—sec scale 2**-35 -->
   <!ELEMENT tme_A1 (#PCDATA)>  <!-- sec/sec scale 2**-51 -->
   <!ELEMENT tme_A2 (#PCDATA)>  <!-- sec/sec sec scale 2**-68 -->
   <!ELEMENT tme_week (#PCDATA)>  <!-- 0..8191 -->

<!ELEMENT GNSS_nav_model (GNSS_satelite+) >
   <!ATTLIST GNSS_nav_model
   non_broadcast_ind_flag (0|1) "0">

<!ELEMENT GNSS_satelite (sat_id,nms_health,nms_iod,
   ((nms_clock_nav,nms_orbit_nav)|
   (nms_clock_cnav,nms_orbit_cnav)|
   (nms_clock_glonass,nms_orbit_glonass)|
   (nms_clock_sbas,nms_orbit_sbas)))>
   <!ELEMENT nms_health (#PCDATA)>  <!-- in hexadecimal -->
   <!ELEMENT nms_iod (#PCDATA)>  <!-- includes iod_msb -->

<!ELEMENT GNSS_integrity (bad_signal*)>
   <!ELEMENT bad_signal (sat_id,GNSS_signal?)>
   <!ELEMENT signal (#PCDATA)>  <!-- hex -->

<!ELEMENT GNSS_assist_req (GNSS_assist_req_per_gnss*)>
   <!-- common assist req -->
   <!ELEMENT GNSS_ref_time_req EMPTY>
      <!ATTLIST GNSS_ref_time_req
      time_req_pref (SBAS|MGPS|QZSS|Glonass|GPS) #IMPLIED
      tow_req (false|true) "false"
      leap_sec_req (false|true) #IMPLIED>
   <!ELEMENT GNSS_ref_loc_req EMPTY>
   <!ELEMENT GNSS_ion_model_req EMPTY>
   <!ELEMENT GNSS_earth_orient_req EMPTY>

   <!-- generic req -->
   <!ELEMENT GNSS_assist_req_per_gnss
(GNSS_time_model_req?,GNSS_navigation_model_req?,GNSS_integrity_req?,GNSS_acquis
ition_req?)>
      <!ATTLIST GNSS_assist_req_per_gnss
         gnss_id (SBAS|MGPS|QZSS|Glonass|GPS) #REQUIRED
         sbas_id (WASS|EGNOS|MSAS|GAGAN) #IMPLIED>
      <!ELEMENT GNSS_time_model_req EMPTY>
      <!-- For LPP gnss-TO-IDsReq is derived from gnss_id -->
         <!ATTLIST GNSS_time_model_req delta_T_req (false|true) #IMPLIED>
      <!ELEMENT GNSS_navigation_model_req
(stored_nav_list?,requested_nav_list?) >
         <!ELEMENT stored_nav_list
(snl_week_or_day,snl_toe,snl_toe_limit,stored_sat_list_element*,requested_nav_li
st?)>
            <!ELEMENT snl_week_or_day (#PCDATA)>
            <!ELEMENT snl_toe (#PCDATA)>
            <!ELEMENT snl_toe_limit (#PCDATA)>
            <!ELEMENT stored_sat_list_element EMPTY>
               <!ATTLIST stored_sat_list_element
               stored_id CDATA #REQUIRED
               stored_iod CDATA #REQUIRED
               stored_clock_model (2|3|4|5) #IMPLIED
               stored_orbit_model (2|3|4|5) #IMPLIED>
            <!ELEMENT requested_nav_list (wanted_nav_list_info*)>
```

```
                <!ELEMENT wanted_nav_list_info EMPTY>
                   <!ATTLIST wanted_nav_list_info
                   wanted_sv CDATA "00000000ffffffff"
                   wanted_clock_model (2|3|4|5) #IMPLIED
                   wanted_orbit_model (2|3|4|5) #IMPLIED
                   wanted_add_nav_param (false|true) #IMPLIED>
                <!-- wanted_sv is a bit string in hexidecimal, needed for LPP -->
      <!ELEMENT GNSS_integrity_req EMPTY>
      <!ELEMENT GNSS_acquisition_req EMPTY>
         <!ATTLIST GNSS_acquisition_req signal
(GPS_L1|GPS_L1C|GPS_L2C|GPS_L5|SBAS_L1|GLO_G1|GLO_G2|GLO_G3) "GPS_L1">
```

NOTE 14: GNSS_assist is used for assistance data received via an RRLP ASN.1 GANSSAssistanceSet element (refer to 3GPP TS 44.031 [79]), via an RRC GANSS assistance data element (refer to 3GPP TS 25.331 [74] subclause 10.3.7.90b) or via LPP.

NOTE 14a: The element ‘GNSS_ref_measurement_assist’ of ‘GNSS_assist’ and ‘acqu_assist’ of ‘GNSS_assist’, both hold ‘acqu_assist’ data. Therefore ‘GNSS_ref_measurement_assist’ can be omitted when ‘acqu_assist’ is present or vice versa.

Table 8.55-16: XML DTD for GNSS GPS

```
<!ELEMENT nms_clock_nav (nav_Toc,nav_af2,nav_af1,nav_af0,nav_Tgd)>
   <!ELEMENT nav_Toc (#PCDATA)>  <!--  0..37799 -->
   <!ELEMENT nav_af2 (#PCDATA)>  <!-- -128..127 -->
   <!ELEMENT nav_af1 (#PCDATA)>  <!-- -32768..32767 -->
   <!ELEMENT nav_af0 (#PCDATA)>  <!-- -2097152..2097151 -->
   <!ELEMENT nav_Tgd (#PCDATA)>  <!-- -128..127  -->

<!ELEMENT nms_orbit_nav
(nav_URA,nav_FitFlag,nav_Toe,nav_Omega,nav_DeltaN,nav_M0,nav_OmegaA_d,nav_E,nav_
I_d,nav_APowerHalf,nav_I0,nav_OmegaA0,nav_Crs,nav_Cis,nav_Cus,nav_Crc,nav_Cic,na
v_Cuc,(nav_CodeOnL2,nav_L2Pflag,nav_sf1_1,nav_sf1_2,nav_sf1_3,nav_sf1_4,nav_AODA
)?)>
   <!ELEMENT nav_URA (#PCDATA)>  <!--  0..15 -->
   <!ELEMENT nav_FitFlag (#PCDATA)>  <!--  0..1 -->
   <!ELEMENT nav_Toe (#PCDATA)>  <!--  0..37799 -->
   <!ELEMENT nav_Omega (#PCDATA)>  <!-- -2147483648..2147483647 -->
   <!ELEMENT nav_DeltaN (#PCDATA)>  <!-- -32768..32767 -->
   <!ELEMENT nav_M0 (#PCDATA)>  <!-- -2147483648..2147483647 -->
   <!ELEMENT nav_OmegaA_d (#PCDATA)>  <!-- -8388608..8388607 -->
   <!ELEMENT nav_E (#PCDATA)>  <!--  0..4294967295 -->
   <!ELEMENT nav_I_d (#PCDATA)>  <!-- -8192..8191 -->
   <!ELEMENT nav_APowerHalf (#PCDATA)>  <!--  0..4294967295 -->
   <!ELEMENT nav_I0 (#PCDATA)>  <!-- -2147483648..2147483647 -->
   <!ELEMENT nav_OmegaA0 (#PCDATA)>  <!-- -2147483648..2147483647 -->
   <!ELEMENT nav_Crs (#PCDATA)>  <!-- -32768..32767 -->
   <!ELEMENT nav_Cis (#PCDATA)>  <!-- -32768..32767 -->
   <!ELEMENT nav_Cus (#PCDATA)>  <!-- -32768..32767 -->
   <!ELEMENT nav_Crc (#PCDATA)>  <!-- -32768..32767 -->
   <!ELEMENT nav_Cic (#PCDATA)>  <!-- -32768..32767 -->
   <!ELEMENT nav_Cuc (#PCDATA)>  <!-- -32768..32767 -->
   <!ELEMENT nav_CodeOnL2 (#PCDATA)>  <!--  0..3 -->
   <!ELEMENT nav_L2Pflag (#PCDATA)>  <!--  0..1 -->
   <!ELEMENT nav_sf1_1 (#PCDATA)>  <!--  0..8388607 -->
   <!ELEMENT nav_sf1_2 (#PCDATA)>  <!--  0..16777215 -->
   <!ELEMENT nav_sf1_3 (#PCDATA)>  <!--  0..16777215 -->
   <!ELEMENT nav_sf1_4 (#PCDATA)>  <!--  0..65535 -->
   <!ELEMENT nav_AODA (#PCDATA)>  <!--  0..31 -->
```

```
<!ELEMENT nms_clock_cnav
(cnav_Toc,cnav_Top,cnav_URA0,cnav_URA1,cnav_URA2,cnav_Af2,cnav_Af1,cnav_Af0,cnav
_Tgd,cnav_ISCl1cp?,cnav_ISCl1cd?,cnav_ISCl1ca?,cnav_ISCl2c?,cnav_ISCl5i5?,cnav_I
SCl5q5?)>
   <!ELEMENT cnav_Toc (#PCDATA)>  <!-- 0..2015 -->
   <!ELEMENT cnav_Top (#PCDATA)>  <!-- 0..2015 -->
   <!ELEMENT cnav_URA0 (#PCDATA)>  <!-- -16..15 -->
   <!ELEMENT cnav_URA1 (#PCDATA)>  <!-- 0..7 -->
   <!ELEMENT cnav_URA2 (#PCDATA)>  <!-- 0..7 -->
   <!ELEMENT cnav_Af2 (#PCDATA)>  <!-- -512..511 -->
   <!ELEMENT cnav_Af1 (#PCDATA)>  <!-- -524288..524287 -->
   <!ELEMENT cnav_Af0 (#PCDATA)>  <!-- -33554432..33554431 -->
   <!ELEMENT cnav_Tgd (#PCDATA)>  <!-- -4096..4095 -->
   <!ELEMENT cnav_ISCl1cp (#PCDATA)>  <!-- -4096..4095 -->
   <!ELEMENT cnav_ISCl1cd (#PCDATA)>  <!-- -4096..4095 -->
   <!ELEMENT cnav_ISCl1ca (#PCDATA)>  <!-- -4096..4095 -->
   <!ELEMENT cnav_ISCl2c (#PCDATA)>  <!-- -4096..4095 -->
   <!ELEMENT cnav_ISCl5i5 (#PCDATA)>  <!-- -4096..4095 -->
   <!ELEMENT cnav_ISCl5q5 (#PCDATA)>  <!-- -4096..4095 -->

<!ELEMENT nms_orbit_cnav
(cnav_Top,cnav_URAindex,cnav_DeltaA,cnav_Adot,cnav_DeltaNo,cnav_DeltaNoDot,cnav_
Mo,cnav_E,cnav_Omega,cnav_OMEGA0,cnav_DeltaOmegaDot,cnav_Io,cnav_IoDot,cnav_Cis,
cnav_Cic,cnav_Crs,cnav_Crc,cnav_Cus,cnav_Cuc)>
   <!ELEMENT cnav_URAindex (#PCDATA)>  <!-- -16..15 -->
   <!ELEMENT cnav_DeltaA (#PCDATA)>  <!-- -33554432..33554431 -->
   <!ELEMENT cnav_Adot (#PCDATA)>  <!-- -16777216..16777215 -->
   <!ELEMENT cnav_DeltaNo (#PCDATA)>  <!-- -65536..65535 -->
   <!ELEMENT cnav_DeltaNoDot (#PCDATA)>  <!-- -4194304..4194303 -->
   <!ELEMENT cnav_Mo (#PCDATA)>  <!-- -4294967296..4294967295 -->
   <!ELEMENT cnav_E (#PCDATA)>  <!-- 0..8589934591 -->
   <!ELEMENT cnav_Omega (#PCDATA)>  <!-- -4294967296..4294967295 -->
   <!ELEMENT cnav_OMEGA0 (#PCDATA)>  <!-- -4294967296..4294967295 -->
   <!ELEMENT cnav_DeltaOmegaDot (#PCDATA)>  <!-- -65536..65535 -->
   <!ELEMENT cnav_Io (#PCDATA)>  <!-- -4294967296..4294967295 -->
   <!ELEMENT cnav_IoDot (#PCDATA)>  <!-- -16384..16383 -->
   <!ELEMENT cnav_Cis (#PCDATA)>  <!-- -32768..32767 -->
   <!ELEMENT cnav_Cic (#PCDATA)>  <!-- -32768..32767 -->
   <!ELEMENT cnav_Crs (#PCDATA)>  <!-- -8388608..8388607 -->
   <!ELEMENT cnav_Crc (#PCDATA)>  <!-- -8388608..8388607 -->
   <!ELEMENT cnav_Cus (#PCDATA)>  <!-- -1048576..1048575 -->
   <!ELEMENT cnav_Cuc (#PCDATA)>  <!-- -1048576..1048575 -->
```

.

Table 8.55-17: XML DTD for Glonass

```
<!ELEMENT nms_orbit_glonass
(glo_En,glo_P1,glo_P2,glo_M,glo_X,glo_X_d,glo_X_dd,glo_Y,glo_Y_d,glo_Y_dd,glo_Z_
d,glo_Z_dd)>
   <!ELEMENT glo_En (#PCDATA)>  <!--  0..31 -->
   <!ELEMENT glo_P1 (#PCDATA)>  <!-- hex -->
   <!ELEMENT glo_P2 (#PCDATA)>  <!--  0..1 -->
   <!ELEMENT glo_M (#PCDATA)>  <!--  0..3 -->
   <!ELEMENT glo_X (#PCDATA)>  <!-- -67108864..67108863 -->
   <!ELEMENT glo_X_d (#PCDATA)>  <!-- -8388608..8388607 -->
   <!ELEMENT glo_X_dd (#PCDATA)>  <!-- -16..15 -->
   <!ELEMENT glo_Y (#PCDATA)>  <!-- -67108864..67108863 -->
   <!ELEMENT glo_Y_d (#PCDATA)>  <!-- -8388608..8388607 -->
   <!ELEMENT glo_Y_dd (#PCDATA)>  <!-- -16..15 -->
   <!ELEMENT glo_Z (#PCDATA)>  <!-- -67108864..67108863 -->
   <!ELEMENT glo_Z_d (#PCDATA)>  <!-- -8388608..8388607 -->
   <!ELEMENT glo_Z_dd (#PCDATA)>  <!-- -16..15 -->
```

```
<!ELEMENT nms_clock_glonass (glo_Tau,glo_Gamma,glo_DeltaTau)>
   <!ELEMENT glo_Tau (#PCDATA)>  <!-- -2097152..2097151 -->
   <!ELEMENT glo_Gamma (#PCDATA)>  <!-- -1024..1023  -->
   <!ELEMENT glo_DeltaTau (#PCDATA)>  <!-- -16..15 -->
```

Table 8.55-18: XML DTD for SBAS

```
<!ELEMENT nms_clock_sbas (sbas_To,sbas_Agfo,sbas_Agf1)>  <!-- model 4 -->
   <!ELEMENT sbas_To (#PCDATA)>
   <!ELEMENT sbas_Agfo (#PCDATA)>
   <!ELEMENT sbas_Agf1 (#PCDATA)>

<!ELEMENT nms_orbit_sbas
(sbas_To,sbas_accuracy,sbas_Xg,sbas_Yg,sbas_Zg,sbas_Xg_d,sbas_Yg_d,sbas_Zg_d,sba
s_Xg_dd,sbas_Yg_dd,sbas_Zg_dd)>  <!-- model 4-->
   <!ELEMENT sbas_accuracy (#PCDATA)>  <!-- hex -->
   <!ELEMENT sbas_Xg (#PCDATA)>
   <!ELEMENT sbas_Yg (#PCDATA)>
   <!ELEMENT sbas_Zg (#PCDATA)>
   <!ELEMENT sbas_Xg_d (#PCDATA)>
   <!ELEMENT sbas_Yg_d (#PCDATA)>
   <!ELEMENT sbas_Zg_d (#PCDATA)>
   <!ELEMENT sbas_Xg_dd (#PCDATA)>
   <!ELEMENT sbas_Yg_dd (#PCDATA)>
   <!ELEMENT sbas_Zg_dd (#PCDATA)>
```

Table 8.55-19: XML DTD for <GNSS_provided_location_information>

<!ELEMENT GNSS_provided_location_information (GNSS_meas|location_parameters)>

NOTE 15: GNSS_provide_location_information is used for reporting location information for GNSS procedures i.e. procedures where GNSS_allowed_methods or GNSS_assist is received. This element matches the ASN.1 element GANSSLocationInfo for RRLP procedures; UE positioning measured results information element for RRC or ASN.1 A-GNSS-ProvideLocationInformation for LPP.

NOTE 15a: Both in ‘pos_meas’ and ‘pos_meas_req’, either MS-Based or MS-Assisted positioning can be specified requiring either ‘location_parameters’ or ‘GNSS_meas’ elements respectively.

Table 8.55-20: XML DTD for <OTDOA_meas>

```
<!ELEMENT OTDOA_meas
(system_frame_number,phys_cell_id_ref,cell_global_id_ref?,earfcn_ref?,ref_qualit
y?,neighbour_meas_list)>
   <!ELEMENT system_frame_number (#PCDATA)>
   <!ELEMENT phys_cell_id_ref (#PCDATA)>  <!-- 0..503 -->
   <!ELEMENT cell_global_id_ref (mcc,mnc,cell_id)>
      <!ELEMENT mcc (#PCDATA)>
      <!ELEMENT mnc (#PCDATA)>
      <!ELEMENT cell_id (#PCDATA)>
   <!ELEMENT earfcn_ref (#PCDATA)>  <!-- 0..65535 -->
   <!ELEMENT ref_quality (OTDOA_meas_quality)>
   <!ELEMENT neighbour_meas_list (neighbour_meas_element)+>
      <!ELEMENT neighbour_meas_element
(phys_cell_id_neighbour,cell_global_id_neighbour?,earfcn_neighbour?,rstd,rstd_qu
ality)>
         <!ELEMENT phys_cell_id_neighbour (#PCDATA)>
         <!ELEMENT cell_global_id_neighbour (mcc,mnc,cell_identity)>
            <!ELEMENT mcc (#PCDATA)>
            <!ELEMENT mnc (#PCDATA)>
```

```
            <!ELEMENT cell_identity (#PCDATA)>
         <!ELEMENT earfcn_neighbour (#PCDATA)>  <!-- 0..65535 -->
         <!ELEMENT rstd (#PCDATA)>  <!-- 0..12711 -->
         <!ELEMENT rstd_quality (OTDOA_meas_quality)>
            <!ELEMENT OTDOA_meas_quality
(err_resolution,err_value,err_num_samples?)>
               <!ELEMENT err_resolution (#PCDATA)>
               <!ELEMENT err_value (#PCDATA)>
               <!ELEMENT err_num_samples (#PCDATA)>
```

NOTE 16: For the elements and the value ranges of OTDOA measurements refer to 3GPP TS 36.355 [115] (subclause 6.5.1). The value ranges of relevant parameters are described in the ASN.1 syntax.

Table 8.55-21: XML DTD for <OTDOA_assist_req>

```
<!ELEMENT OTDOA_assist_req (phys_cell_id)>
   <!ELEMENT phys_cell_id (#PCDATA)>  <!-- 0..503 -->
```

Table 8.55-22: XML DTD element for <reset_assist_data>

```
<!ELEMENT reset_assist_data EMPTY> <!-- Reset UE positioning stored AGNSS
assistance data -->
```

NOTE 17: For resetting UE positioning stored AGNSS assistance data refer to 3GPP TS 36.509 [142] (subclause 6.9).

Implementation

Optional.

8.56 Positioning reporting +CPOSR

Table 8.56-1: +CPOSR parameter command syntax

Command	Possible response(s)
+CPOSR=[<mode>]	
+CPOSR?	+CPOSR: <mode>
+CPOSR=?	+CPOSR: (list of supported <mode>s)

Description

Set command enables or disables the sending of unsolicited result codes. The XML-formatted string may be sent as one or more unsolicited result codes. Each part of the XML-formatted string is sent as one unsolicited result code, prefixed with +CPOSR.

NOTE: An XML-formatted string intended for +CPOSR can be split e.g. in order to prevent that the string becomes too long. Where to split an XML-formatted string is implementation specific. The characters <CR><LF>, <+CPOSR> and space(s) are ignored when re-constructing an XML-formatted string.

Example: +CPOSR: <One line of positioning data sent on XML format>.

Read command returns the current mode.

Test command returns the supported values and ranges.

Defined values

<mode>: integer type

0 disables reporting

1 enables reporting

Defined events

<location>: string type in UTF-8. This parameter provides an XML-formatted string of GAD-shape positioning data similar to what is defined in table 8.55-3. This parameter shall not be subject to conventional character conversion as per +CSCS.

<assist_data>: string type in UTF-8. This parameter provides an XML-formatted string of assistance data as defined in table 8.55-5. This parameter shall not be subject to conventional character conversion as per +CSCS.

<pos_meas>: string type in UTF-8. This parameter provides an XML-formatted string of position measurements data request as defined in table 8.55-8. This parameter shall not be subject to conventional character conversion as per +CSCS.

<pos_meas_req>: string type in UTF-8. This parameter provides an XML-formatted string of position measurements request data as defined in table 8.55-9. This is an alternative to <pos_meas>. This parameter shall not be subject to conventional character conversion as per +CSCS.

<GPS_meas>: string type in UTF-8. This parameter provides an XML-formatted string of GPS measurement data as defined in table 8.55-6-10. This parameter shall not be subject to conventional character conversion as per +CSCS.

<OTDOA_meas>: string type in UTF-8. This parameter provides an XML-formatted string of OTDOA measurement data as defined in table 8.55-20. This parameter shall not be subject to conventional character conversion as per +CSCS.

<GNSS_meas>: string type in UTF-8. This parameter provides an XML-formatted string of GPS measurement data as defined in table 8.55-11 for LPP procedures. This parameter shall not be subject to conventional character conversion as per +CSCS.

<GPS_assist_req>: string type in UTF-8. This parameter provides an XML-formatted string for requesting assistance data as defined in table 8.55-12. This parameter shall not be subject to conventional character conversion as per +CSCS.

<GNSS_assist_req>: string type in UTF-8. This parameter provides an XML-formatted string for requesting GNSS assistance data as defined in table 8.55-15. This parameter shall not be subject to conventional character conversion as per +CSCS.

<OTDOA_assist_req>: string type in UTF-8. This parameter provides an XML-formatted string for requesting OTDOA assistance data as defined in table 8.55-21. This parameter shall not be subject to conventional character conversion as per +CSCS.

<capability_req>: string type in UTF-8. This parameter provides an XML-formatted string for requesting capability data as defined in table 8.55-4. This parameter shall not be subject to conventional character conversion as per +CSCS.

<capabilities>: string type in UTF-8. This parameter provides an XML-formatted string for providing capability data as defined in table 8.55-4. This parameter shall not be subject to conventional character conversion as per +CSCS.

<msg>: string type in UTF-8. This parameter provides an XML-formatted string for communicating simple messages as defined in table 8.55-13. This parameter shall not be subject to conventional character conversion as per +CSCS.

<pos_err>: string type in UTF-8. This parameter provides an XML-formatted string of positioning error parameters as defined in table 8.55-14. This parameter shall not be subject to conventional character conversion as per +CSCS.

<reset_assist_data>: string type in UTF-8. This parameter provides an XML-formatted string for resetting GNSS assistance data as defined in table 8.55-22. This parameter shall not be subject to conventional character conversion as per +CSCS.

Implementation

Optional.

8.57 Mobile terminated location request notification +CMTLR

Table 8.57-1: +CMTLR parameter command syntax

Command	Possible response(s)
+CMTLR=[<subscribe>]	
+CMTLR?	+CMTLR: <subscribe>
+CMTLR=?	+CMTLR: (list of supported <subscribe> values)

Description

Set command enables Mobile Terminated Location Request (MT-LR) notifications to the TE. The parameter <subscribe> enables or disables notification by an unsolicited result code. It is possible to enable notification of MT-LR performed over the control plane or over SUPL or both. Relevant location request parameters are provided in the unsolicited result code +CMTLR: <handle-id>,<notification-type>,<location-type>,[<client-external-id>],[<client-name>][,<plane>].

This unsolicited result code is reported upon arrival of a Mobile Terminated Location Request. In order to differentiate multiple requests, every request is given a different <handle-id>. This ID is used when allowing or denying location disclosure with +CMTLRA.

Read command returns the current value of <subscribe>.

Test command returns the supported values.

Defined values

<subscribe>: integer type. Enables and disables the subscription for MT-LR notifications

0 Disables reporting and positioning.

1 Subscribe for notifications of MT-LR over control plane.

2 Subscribe for notifications of MT-LR over SUPL.

3 Subscribe for notifications of MT-LR over control plane and SUPL.

<handle-id>: integer type. ID associated with each MT-LR used to distinguish specific request in case of multiple requests. The value range is 0-255.

<notification-type>: integer type. Information about the user's privacy. The default value is implementation specific.

0 The subscription may stipulate that positioning the user by a third party is allowed and the network may choose to inform the user as a matter of courtesy.

1 Locating the user is permitted if the user ignores the notification.

2 Locating the user is forbidden if the user ignores the notification.

<location-type>: integer type. Indicates what type of the location is requested. The default value is implementation specific.

0 The current location.

1 The current or last known location.

2 The initial location.

<client-external-id>: string type. Indicates the external client where the location information is sent to (if required).

<client-name>: string type. Contains the string identifying the external client requesting the user's location

<plane>: integer type. The parameter specifies whether the MT-LR came over control plane or SUPL.

0 Control plane.

1 Secure user plane (SUPL).

Implementation

Optional.

8.58 Mobile terminated location request disclosure allowance +CMTLRA

Table 8.58-1: +CMTLRA parameter command syntax

Command	Possible response(s)
+CMTLRA=<allow>,<handle_id>	
+CMTLRA?	+CMTLRA: <allow>,<handle_id>
+CMTLRA=?	+CMTLRA: (list of supported <allow> values)

Description

Set command allows or disallows disclosure of the location to the TE as a result of MT-LR by the parameter <allow>.

Read command returns the current value.

Test command returns the supported values.

Defined values

<allow>: integer type. Enables and disables the allowance for location disclosure.

0 Location disclosure allowed.

1 Location disclosure not allowed.

<handle-id>: integer type. ID associated with each MT-LR used to distinguish specific request in case of multiple requests. The value is given in +CMTLR. The value range is 0-255.

Implementation

Optional.

8.59 Battery capacity +CBCAP

Table 8.59-1: CBCAP parameter command syntax

Command	Possible response(s)
+CBCAP=[<reporting>[,<reporting_interval>]]	
+CBCAP?	+CBCAP: <reporting>,<reporting_interval>,<bcl>

+CBCAP=?	+CBCAP: (list of supported <reporting>s),(list of supported <reporting_interval>s)

Description

Set command enables reporting upon change in battery capacity level, with unsolicited result code +CBCAP: <bcl>. Consecutive reports never show same value of <bcl>.

Read command returns the status of result code presentation and the current battery capacity level.

Test command returns values supported as compound values.

Defined values

<reporting>: integer type. Enables and disables reporting of changes in the battery capacity level.

0 Disable reporting

1 Enable reporting

<reporting_interval>: integer type. Sets the reporting interval of the battery capacity level.

1...100 Amount that the remaining battery capacity must change before reporting).

<bcl>: integer type. Gives the remaining relative battery capacity level (in percentages).

0 The battery is exhausted or ME does not have a battery connected

1...100 remaining battery capacity level (in percentages). The provided values are dependant on the parameter <reporting_interval>. A value of 5 for parameter <reporting_interval>, means that the following values of <bcl> are appliccable: 0, 5, 10, 15, … , 90, 95, 100.

NOTE: 100% capacity is always reported, even if <reporting_interval> is set to a value where no integer multiple equals 100.

Implementation

Optional.

8.60 Battery connection status +CBCON

Table 8.60-1: +CBCON parameter command syntax

Command	Possible response(s)
+CBCON=[<reporting>]	
+CBCON?	+CBCON: <reporting>,<bcs>
+CBCON=?	+CBCON: (list of supported <reporting>s)

Description

Set command enables reporting upon change in battery connection status, with unsolicited result code +CBCON: <bcs>.

Read command returns the status of result code presentation and the current battery status.

Test command returns values supported as compound values.

Defined values

<reporting>: integer type. Enables and disables reporting of changes in the battery connection status.

0 disable reporting

1 enable reporting

<bcs>: integer type. Indicates the battery status.

0 ME is powered by the battery

1 ME has a battery connected, but is not powered by it

2 ME does not have a battery connected

3 Recognized power fault, calls inhibited

Implementation

Optional.

8.61 Battery charger status +CBCHG

Table 8.61-1: +CBCHG parameter command syntax

Command	Possible response(s)
+CBCHG=[<reporting>]	
+CBCHG?	+CBCHG: <reporting>,<chg_status>
+CBCHG=?	+CBCHG: (list of supported <reporting>s)

Description

Set command enables reporting upon change in battery charger status, with unsolicited result code +CBCHG: <chg_status>.

Read command returns the status of result code presentation and the current battery charger status.

Test command returns values supported as compound values.

Defined values

<reporting>: integer type. Enables and disables reporting of changes in the battery charger status.

0 disable reporting

1 enable reporting

<chg_status>: integer type. Indicates type of battery charger status.

0 no charger connected

1 charger connected, normal type charger

2 charger connected, USB type charger

Implementation

Optional.

8.62 Printing IP address format +CGPIAF

Table 8.62-1: +CGPIAF parameter command syntax

Command	Possible response(s)
+CGPIAF=[<IPv6_AddressFormat>[,<IPv6_SubnetNotation>[,<IPv6_LeadingZeros>[,<IPv6_CompressZeros>]]]]	
+CGPIAF?	+CGPIAF: <IPv6_AddressFormat>,<IPv6_SubnetNotation>,<IPv6_LeadingZeros>,<IPv6_CompressZeros>
+CGPIAF=?	+CGPIAF: (list of supported <IPv6_AddressFormat>s),(list of supported <IPv6_SubnetNotation>s),(list of supported <IPv6_LeadingZeros>s),(list of supported <IPv6_CompressZeros>s)

Description

Set command decides what format to print IPV6 address parameters of other AT commands. See RFC 4291 [88] for details of the IPv6 address format.

The +CGPIAF parameters <IPv6_AddressFormat>, <IPv6_SubnetNotation>, <IPv6_LeadingZeros> and <IPv6_CompressedZeros> affect the following commands and parameters:

a) in +CGTFT and +CGTFTRDP, the <remote address and subnet mask>;

b) in +CGDCONT, the <PDP_addr>;

c) in +CGPADDR, the <PDP_addr_1> and <PDP_addr_2>;

d) in +CGCONTRDP, the <local address and subnet mask>, <DNS_prim_addr>, <DNS_sec_addr>, <P_CSCF_prim_addr> and <P_CSCF_sec_addr>; and

e) in +CRC, the <PDP_addr> of unsolicited result code GPRS <PDP_type>, <PDP_addr>[,[<L2P>][,<APN>]].

Read command returns the current command parameter settings.

Test command returns values supported as compound values.

Defined values

<IPv6_AddressFormat>: integer type, decides the IPv6 address format. Relevant for all AT command parameters that can hold an IPv6 address.

0 Use IPv4-like dot-notation. IP address, and subnetwork mask if appliccable, are dot-separated.

Example: For <remote address and subnet mask>:
"32.1.13.184.0.0.205.48.0.0.0.0.0.0.0.0.255.255.255.255.255.255.255.240.0.0.0.0.0.0.0.0"
For other IP address parameters:
"32.1.13.184.0.0.205.48.0.0.0.0.0.0.0.0"

1 Use IPv6-like colon-notation. IP address, and subnetwork mask if applicable and when given explicitly, are separated by a space.

Example: For <remote address and subnet mask>:
"2001:0DB8:0000:CD30:0000:0000:0000:0000 FFFF:FFFF:FFFF:FFF0:0000:0000:0000:0000"
For other IP address parameters:
"2001:0DB8:0000:CD30:0000:0000:0000:0000"

<IPv6_SubnetNotation>: integer type, decides the subnet-notation for <remote address and subnet mask. Setting does not apply if <IPv6_AddressFormat> = 0.

0 Both IP Address and subnet mask are stated explicitly, separated by a space.

Example: "2001:0DB8:0000:CD30:0000:0000:0000:0000 FFFF:FFFF:FFFF:FFF0:0000:0000:0000:0000"

1 The printout format is applying / (forward slash) subnet-prefix Classless Inter-Domain Routing (CIDR) notation.

Example: "2001:0DB8:0000:CD30:0000:0000:0000:0000/60"

`<IPv6_LeadingZeros>`: integer type, decides whether leading zeros are omitted or not. Setting does not apply if `<IPv6_AddressFormat>` = 0.

0 Leading zeros are omitted.

Example: "2001:DB8:0:CD30:0:0:0:0"

1 Leading zeros are included.

Example: "2001:0DB8:0000:CD30:0000:0000:0000:0000"

`<IPv6_CompressZeros>`: integer type, decides whether 1-n instances of 16-bit zero-values are replaced by only '::'. This applies only once. Setting does not apply if `<IPv6_AddressFormat>` = 0.

0 No zero compression.

Example: "2001:DB8:0:CD30:0:0:0:0"

1 Use zero compression.

Example: "2001:DB8:0:CD30::"

Implementation

Optional.

8.63 IMS single radio voice call continuity +CISRVCC

Table 8.63-1: +CISRVCC parameter command syntax

Command	Possible response(s)
`+CISRVCC=[<uesrvcc>]`	*`+CME ERROR: <err>`*
`+CISRVCC?`	`+CISRVCC: <uesrvcc>`
`+CISRVCC=?`	`+CISRVCC: (`list of supported `<uesrvcc>`s`)`

Description

SRVCC provides the ability to have a seamless handover of a voice call between the PS domain and the CS domain for calls that are anchored in IMS, when the UE is capable of transmitting/receiving on only one of those access networks (PS or CS) at a given time, see 3GPP TS 23.221 [90] subclause 7.2a, annex A.1 and annex A.2

Set command informs MT about the SRVCC Support. MT normally updates the network when changing this parameter. Refer subclause 9.2 for possible `<err>` values.

Read command returns the status of the MT stored SRVCC Support.

Test command returns supported values.

Defined values

`<uesrvcc>`: integer type. SRVCC support status

0 The UE does not have SRVCC support

1 The UE has SRVCC support

Implementation

Optional.

8.64 IMS network reporting +CIREP

Table 8.64-1: +CIREP parameter command syntax

Command	Possible response(s)
+CIREP=[<reporting>]	
+CIREP?	+CIREP: <reporting>,<nwimsvops>
+CIREP=?	+CIREP: (list of supported <reporting>s)

Description

Set command enables or disables reporting of PS to CS Single Radio Voice Call Continuity (SRVCC), PS to CS Single Radio Video Call Continuity (vSRVCC) handover information and CS to PS Single Radio Voice Call Continuity (see 3GPP TS 24.237 [91]) and of IMS Voice Over PS sessions (IMSVOPS) indicator information, by the following unsolicited result codes:

+CIREPI: <nwimsvops> IMS Voice Over PS sessions (IMSVOPS) supported indication from the network.

+CIREPH: <srvcch> Provides PS to CS SRVCC, PS to CS vSRVCC and CS to PS SRVCC handover information.

Read command returns the status of result code presentation and the IMSVOPS supported indication.

Test command returns supported values.

Defined values

<reporting>: integer type. Enables or disables reporting of changes in the IMSVOPS supported indication received from the network and reporting of PS to CS SRVCC, PS to CS vSRVCC and CS to PS SRVCC handover information.

0 Disable reporting

1 Enable reporting

<nwimsvops>: integer type. Gives the last IMS Voice Over PS sessions (IMSVOPS) supported indication received from network.

0 IMSVOPS support indication is not received from network, or is negative.

1 IMSVOPS support indication as received from network is positive.

<srvcch>: integer type. PS to CS SRVCC, PS to CS vSRVCC and CS to PS SRVCC handover information.

0 PS to CS SRVCC handover has started in the CS domain ("Handover Command" indicating PS to CS SRVCC received).

1 PS to CS SRVCC handover successful ("Handover Complete" sent).

2 PS to CS SRVCC or PS to CS vSRVCC handover cancelled ("Handover Failure" sent).

3 PS to CS SRVCC or PS to CS vSRVCC handover, general non-specific failure.

4 PS to CS vSRVCC handover has started in the CS domain ("Handover Command" indicating vSRVCC received).

5 PS to CS vSRVCC handover successful ("Handover Complete" sent).

6 CS to PS SRVCC handover has started in the PS domain ("Handover Command" indicating CS to PS SRVCC received).

7 CS to PS SRVCC handover cancelled ("Handover Failure" sent).

8 CS to PS SRVCC handover, general non-specific failure.

9 CS to PS SRVCC handover successful ("Handover Complete" sent).

NOTE 1: Value 3 and 8, general non-specific failure, might be used e.g. in the case of handover cancellation as specified in 3GPP TS 24.301 [83] subclause 6.6.2.

NOTE 2: The naming of SRVCC and vSRVCC handover information values is different from the naming of corresponding NAS session management notifications.

Implementation

Optional.

8.65 Remaining PIN retries +CPINR

Table 8.65-1: +CPINR action command syntax

Command	Possible response(s)
+CPINR[=<sel_code>]	*+CME ERROR: <err>*
+CPINR=?	

Description

Execution command cause the MT to return the number of remaining PIN retries for the MT passwords with intermediate result code +CPINR: <code>,<retries>[,<default_retries>] for standard PINs and +CPINRE: <ext_code>,<retries>[,<default_retries>] for manufacturer specific PINs. One line with one intermediate result code is returned for every <code> or <ext_code> selected by <sel_code>.

When execution command is issued without the optional parameter <sel_code>, intermediate result codes are returned for all <code>s and <ext_code>s.

In the intermediate result codes, the parameter <default_retries> is an optional (manufacturer specific) parameter, per <code> and <ext_code>.

Defined values

<retries>: integer type. Number of remaining retries per PIN.

<default_retries>: integer type. Number of default/initial retries per PIN.

<code>: Type of PIN. All values listed under the description of the AT+CPIN command, <code> parameter, except 'READY'.

<ext_code>: Extended, manufacturer specific codes.

<sel_code>: String type. Same values as for the <code> and <ext_code> parameters. These values are strings and shall be indicated within double quotes. It is optional to support wildcard match by '*', meaning match any (sub-)string.

Example: AT+CPINR="SIM*" will return the lines:

```
+CPINR: SIM PIN,<retries>,<default_retries>
+CPINR: SIM PUK,<retries>,<default_retries>
+CPINR: SIM PIN2,<retries>,<default_retries>
+CPINR: SIM PUK2,<retries>,<default_retries>
```

Example: AT+CPINR="*SIM*" will additionally return the lines:

```
+CPINR: PH-SIM PIN,<retries>,<default_retries>
+CPINR: PH-FSIM PIN,<retries>,<default_retries>
+CPINR: PH-FSIM PUK,<retries>,<default_retries>
```

Implementation

Optional.

8.66 Set card slot +CSUS

Table 8.66-1: +CSUS parameter command syntax

Command	Possible response(s)
`+CSUS=[<card slot>]`	*`+CME ERROR: <err>`*
`+CSUS?`	`+CSUS: <card slot>`
`+CSUS=?`	`+CSUS: (number` of supported `<card slot>`s`)`

Description

When a MT is equipped with multiple card slots, the set command directs the MT to select the SIM/UICC card installed in the indicated card slot in all future actions that require the use of SIM/UICC.

If this command is issued when a SIM/UICC is active, `+CME ERROR` is returned. Refer to subclause 9.2 for `<err>` values.

Read command returns the currently selected card slot.

Test command returns the number of card slots in the MT.

The numbering of card slots is implementation dependent.

Defined values

`<card slot>`: integer type.

0 the SIM/UICC card installed in card slot 0

1 the SIM/UICC card installed in card slot 1

2 the SIM/UICC card installed in card slot 2

3 the SIM/UICC card installed in card slot 3

Implementation

Optional.

8.67 Emergency numbers +CEN

Table 8.67-1: +CEN parameter command syntax

Command	Possible response(s)
`+CEN=[<reporting>]`	

`+CEN?`	`+CEN1: <reporting>[,<mcc>,<mnc>]`
	`<CR><LF>[+CEN2: <cat>,<number>`
	`[<CR><LF>+CEN2: <cat>,<number>`
	`[...]]]`

`+CEN=?`	`+CEN: (`list of supported `<reporting>`s`)`

Description

This command allows for reading and dynamical reporting of emergency numbers as received from the network. The emergency numbers are not necessarily received for the same <mcc> and <mnc> as currently registered to.

Read command returns one line of intermediate result code +CEN1: <reporting>,<mcc> with the current <reporting> setting and the Mobile Country Code <mcc>. Then follows zero or more occurrences of the emergency numbers with intermediate result code +CEN2: <cat>,<number>.

Set command enables reporting of new emergency numbers received from the network with unsolicited result codes equal to the intermediate result codes of the read form of the command.

Test command returns values supported as compound values.

Defined values

<reporting>: integer type. Enables and disables reporting of new emergency numbers received from the network.

0 Disable reporting

1 Enable reporting

<mcc>: integer type. A three-digit value indicating mobile country code as defined in ITU-T Recommendation E.212 [10] Annex A.

<mnc>: integer type. A three-digit value indicating the mobile network code.

<cat>: integer type. A bitmap indicating the Emergency Service Category Value according to 3GPP TS 24.008 [8] table 10.5.135d.

<number>: String type. Representing an emergency number from the list defined in 3GPP TS 24.008 [8]subclause 10.5.3.13. The <number> is encoded with one digit per character and is applicable to the country indicated by <mcc>.

Implementation

Optional.

8.68 Availability for voice calls with IMS +CAVIMS

Table 8.68-1: +CAVIMS parameter command syntax

Command	Possible response(s)
+CAVIMS=[<state>]	
+CAVIMS?	+CAVIMS: <state>
+CAVIMS=?	+CAVIMS: (list of supported <state>s)

Description

Set command informs the MT whether the UE is currently available for voice calls with the IMS (see 3GPP TS 24.229 [89]). The information can be used by the MT to determine "IMS voice not available" as defined in 3GPP TS 24.301 [83], and for mobility management for IMS voice termination, see 3GPP TS 24.008 [20].

Read command returns the UEs IMS voice call availability status stored in the MT.

Test command returns supported values.

Defined values

<state>: integer type. The UEs IMS voice call availability status.

0 Voice calls with the IMS are not available

1 Voice calls with the IMS are available

Implementation

Optional.

8.69 Extended signal quality +CESQ

Table 8.69-1: +CESQ action command syntax

Command	Possible response(s)
+CESQ	+CESQ: <rxlev>,<ber>,<rscp>,<ecno>,<rsrq>,<rsrp> *+CME ERROR: <err>*
+CESQ=?	+CESQ: (list of supported <rxlev>s),(list of supported <ber>s),(list of supported <rscp>s),(list of supported <ecno>s),(list of supported <rsrq>s),(list of supported <rsrp>s)

Description

Execution command returns received signal quality parameters. If the current serving cell is not a GERAN cell, <rxlev> and <ber> are set to value 99. If the current serving cell is not a UTRA FDD or UTRA TDD cell, <rscp> is set to 255. If the current serving cell is not a UTRA FDD cell, <ecno> is set to 255. If the current serving cell is not an E-UTRA cell, <rsrq> and <rsrp> are set to 255.

Refer subclause 9.2 for possible <err> values.

Test command returns values supported as compound values.

Defined values

<rxlev>: integer type, received signal strength level (see 3GPP TS 45.008 [20] subclause 8.1.4).

0 rssi < -110 dBm

1 -110 dBm ≤ rssi < -109 dBm

2 -109 dBm ≤ rssi < -108 dBm

: : : :

61 -50 dBm ≤ rssi < -49 dBm

62 -49 dBm ≤ rssi < -48 dBm

63 -48 dBm ≤ rssi

99 not known or not detectable

<ber>: integer type; channel bit error rate (in percent)

0...7 as RXQUAL values in the table in 3GPP TS 45.008 [20] subclause 8.2.4

99 not known or not detectable

<rscp>: integer type, received signal code power (see 3GPP TS 25.133 [95] subclause 9.1.1.3 and 3GPP TS 25.123 [96] subclause 9.1.1.1.3).

0 rscp < -120 dBm

1 -120 dBm ≤ rscp < -119 dBm

2 -119 dBm ≤ rscp < -118 dBm

: : : :

94 -27 dBm ≤ rscp < -26 dBm

95 -26 dBm ≤ rscp < -25 dBm

96 - 25 dBm ≤ rscp

255 not known or not detectable

<ecno>: integer type, ratio of the received energy per PN chip to the total received power spectral density (see 3GPP TS 25.133 [95] subclause).

0 Ec/Io < -24 dB

1 -24 dB ≤ Ec/Io < -23.5 dB

2 -23.5 dB ≤ Ec/Io < -23 dB

: : : :

47 -1 dB ≤ Ec/Io < -0.5 dB

48 -0.5 dB ≤ Ec/Io < 0 dB

49 0 dB ≤ Ec/Io

255 not known or not detectable

<rsrq>: integer type, reference signal received quality (see 3GPP TS 36.133 [96] subclause 9.1.7).

0 rsrq < -19.5 dB

1 -19.5 dB ≤ rsrq < -19 dB

2 -19 dB ≤ rsrq < -18.5 dB

: : : :

32 -4 dB ≤ rsrq < -3.5 dB

33 -3.5 dB ≤ rsrq < -3 dB

34 -3 dB ≤ rsrq

255 not known or not detectable

<rsrp>: integer type, reference signal received power (see 3GPP TS 36.133 [96] subclause 9.1.4).

0 rsrp < -140 dBm

1 -140 dBm ≤ rsrp < -139 dBm

2 -139 dBm ≤ rsrp < -138 dBm

: : : :

95 -46 dBm ≤ rsrp < -45 dBm

96 -45 dBm ≤ rsrp < -44 dBm

97 -44 dBm ≤ rsrp

255 not known or not detectable

Implementation

Optional.

8.70 Primary notification event reporting +CPNER

Table 8.70-1: +CPNER parameter command syntax

Command	Possible response(s)
+CPNER=[<reporting>]	*+CME ERROR: <err>*
+CPNER?	+CPNER:<reporting> *+CME ERROR: <err>*
+CPNER=?	+CPNER: (list of supported <reporting>s) *+CME ERROR: <err>*

Description

Set command enables and disables reporting of primary notification events when received from the network with unsolicited result code +CPNERU: <message_identifier>,<serial_number>,<warning_type>. Primary notification events are used for public warning systems like ETWS (Earthquake and Tsunami Warning Systems).

When <reporting>=1, duplicate primary notifications will be discarded by the UE.

NOTE 1: The notification is considered a duplicate of the previous if it has equal <message_identifier> and <serial_number> and arrives from the same PLMN. A primary notification message stored to detect duplication is cleared automatically after three hours of not receiving any message.

Read command returns the current settings.

Test command returns supported values.

Refer subclause 9.2 for possible <err> values.

Defined values

<reporting>: integer type, controlling reporting of primary notification events

0 Disable primary notification events.

1 Enable reporting of primary notification events without security information, unsolicited result code +CPNERU: <message_identifier>,<serial_number>,<warning_type>.

NOTE 2: Provision of information for the digital signature authentication is referred to as "reporting of primary notification events with security information" in 3GPP TS 25.331 [74], 3GPP TS 36.331 [86]) and 3GPP TS 23.041 [100]. This functionality is not fully implemented in this release, hence is not supported.

<message_identifier>: string type in hexadecimal character format. The parameter contains the message identifier (2 bytes) of the primary notification. For UTRAN see 3GPP TS 25.331 [74] subclause 10.3.8.4.ea, for GERAN see 3GPP TS 23.041 [100] subclause 9.4.1.3.2, and for E-UTRAN see 3GPP TS 36.331 [86] subclause 6.3.1 *SystemInformationBlockType10*).

<serial_number>: string type in hexadecimal character format. The parameter contains the serial number (2 bytes) of the primary notification. For UTRAN see 3GPP TS 25.331 [74] subclause 10.3.8.4.ea, for GERAN see 3GPP TS 23.041 [100] subclause 9.4.1.3.2, and for E-UTRAN see 3GPP TS 36.331 [86] subclause 6.3.1 *SystemInformationBlockType10*).

<warning_type>: string type in hexadecimal character format. The parameter contains the warning type (2 bytes) of the primary notification. For UTRAN see 3GPP TS 25.331 [74] subclause 10.3.8.4.ea, for GERAN see

3GPP TS 23.041 [100] subclause 9.4.1.3.2, and for E-UTRAN see 3GPP TS 36.331 [86] subclause 6.3.1 *SystemInformationBlockType10*).

Implementation

Optional.

8.71 IMS registration information +CIREG

Table 8.71-1: +CIREG parameter command syntax

Command	Possible response(s)
`+CIREG=[<n>]`	*`+CME ERROR: <err>`*
`+CIREG?`	`+CIREG: <n>,<reg_info>[,<ext_info>]`
`+CIREG=?`	`+CIREG: (`list of supported `<n>`s`)`

Description

The set command controls the presentation of an unsolicited result code `+CIREGU: <reg_info>[,<ext_info>]` when there is a change in the MT's IMS registration information.

The read command returns `<n>`, that shows whether reporting is enabled or disabled, `<reg_info>` that shows whether one or more of the public user identities are registered and optionally `<ext_info>`, that shows the status of the MT's IMS capabilities. For `<ext_info>`, all relevant values are always summarized and reported as a complete set of IMS capabilites in the unsolicited result code.

The test command returns the supported values for `<n>`.

Defined values

`<n>`: integer type. Enables or disables reporting of changes in the MT's IMS registration information.

0 disable reporting.

1 enable reporting (parameter `<reg_info>`).

2 enable extended reporting (parameters `<reg_info>` and `<ext_info>`).

`<reg_info>`: integer type. Indicates the IMS registration status. The UE is seen as registered as long as one or more of its public user identities are registered with any of its contact addresses, see 3GPP TS 24.229 [89].

0 not registered.

1 registered.

`<ext_info>`: numeric value in hexadecimal format. The value range is from 1 to FFFFFFFF. It is a sum of hexadecimal values, each representing a particular IMS capability of the MT. The MT can have IMS capabilites not covered by the below list. This parameter is not present if the IMS registration status is "not registered".

1 RTP-based transfer of voice according to MMTEL, see 3GPP TS 24.173 [87]. This functionality can not be indicated if the UE is not available for voice over PS, see 3GPP TS 24.229 [89].

2 RTP-based transfer of text according to MMTEL, see 3GPP TS 24.173 [87].

4 SMS using IMS functionality, see 3GPP TS 24.341 [101].

8 RTP-based transfer of video according to MMTEL, see 3GPP TS 24.173 [87].

The hexadecimal values 10, 20, 40 … 80000 are reserved by the present document.

EXAMPLE: The parameter <ext_info>=5 means that both RTP-based transfer of voice according to MMTEL and SMS using IMS functionality can be used.

Implementation

Optional.

8.72 Availability for SMS using IMS +CASIMS

Table 8.72-1: +CASIMS parameter command syntax

Command	Possible response(s)
+CASIMS=[<state>]	
+CASIMS?	+CASIMS: <state>
+CASIMS=?	+CASIMS: (list of supported <state>s)

Description

Set command informs the MT whether the UE is currently available for SMS using IMS (see 3GPP TS 24.229 [89]). The information can be used by the MT to determine the need to remain attached for non-EPS services, as defined in 3GPP TS 24.301 [83].

Read command returns the UE's SMS using IMS availability status, as stored in the MT.

Test command returns supported values.

Defined values

<state>: integer type. The UE's SMS using IMS availability status.

0 SMS using IMS is not available

1 SMS using IMS is available

Implementation

Optional.

8.73 Monitor of current calls +CMCCS

Table 8.73-1: +CMCCS parameter command syntax

Command	Possible response(s)
+CMCCS=<n>	**when <n>=1 and command successful:** +CMCCS: (list of supported <x>s)
+CMCCS?	+CMCCS: <n>
+CMCCS=?	+CMCCS: (list of supported <n>s)

Description

This command activates or deactivates a call monitoring function in the ME. When this function is activated in the ME, the ME informs about events for calls with unsolicited result codes.

The purpose of the call monitoring function is to:

1) gather relevant information for the detected calls in a TE; and

2) make it possible for the TE to display call state information for ongoing calls.

The unsolicited result code+CMCCSI is used for basic call information.

```
+CMCCSI: <ccidx>,<dir>,<neg_status_present>,<neg_status>,<SDP_md>,<cs_mode>,<ccs
tatus>,<mpty>,<numbertype>,<ton>,<number>,<exittype>,<exitcause>
```

The unsolicited result code +CMCCSI is provided when <n>=2. For an originating call, the parameters <numbertype>, <ton> and <number> in +CMCCSI provide the number (line identity) information which has been dialled with +CDU or ATD. For a terminating call, the parameters <numbertype>, <ton> and <number> in +CMCCSI provide the number (line identity) information of the calling user.

The unsolicited result codes +CMCCSS<*x*> / +CMCCSSEND are used for supplementary service related information.

```
+CMCCSS1: <ccidx>,<dir>,<service>
[+CMCCSS2: <numbertype>,<ton>,<number>]
[+CMCCSS3: <CLI_validity>]
[+CMCCSS4: <name>]
[+CMCCSS5: <subaddr>,<satype>]
[+CMCCSS6: <priority>]
[+CMCCSS7: <CUG_index>]
+CMCCSSEND
```

The unsolicited result codes +CMCCSS<*x*> / +CMCCSSEND are used for supplementary service related information and are reported when <n>=3. For every supplementary service related event, the unsolicited result codes +CMCCSS<*x*> shall be given in consecutive order, and the sequence of unsolicited result codes shall be terminated by +CMCCSSEND. It is manufacturer specific when and if this additional service reporting will be issued. Whenever a service event is to be reported using these unsolicited result codes, the codes +CMCCSS1 and +CMCCSSEND are mandatory. +CMCCSS1 contains essential information that is always needed (for example <ccidx>) and +CMCCSSEND indicates the end of this particular set of unsolicited result codes. The other unsolicited result codes (+CMCCSS2 to +CMCCSSn) are optional, intended to provide information related to a given service. E.g. for the supplementary service CNAP, the unsolicited result code +CMCCSS4 (containing <name>) may be issued. It is implementation specific which of the unsolicited result codes +CMCCSS<*x*> / +CMCCSSEND that are supported and provided to the TE. The unsolicited result codes should be provided to the TE as soon as the information is available in the ME. The parameters <numbertype>, <ton> and <number> in +CMCCSS2 are, if applicable, normally the line identity information that is related to the parameter <service>.

NOTE 1: For situations where ringing is applicable, the unsolicited result codes +CMCCSS<*x*> / +CMCCSSEND are typically returned after the first RING (or +CRING: <type>; refer subclause "Cellular result codes +CRC") result code sent from TA to TE.

A subset of the information provided by the call monitoring function can be provided by the command +CLCCS.

When the unsolicited result code +CMCCSI report that the <ccstatus>=1 (Idle), the call identification number is reset and the call identification number <ccid*x*> can be used by new calls. The logic for reuse of the parameter <ccid*x*> is implementation specific.

Defined values

<n>: integer type

0 The call monitoring function is disabled

1 List the unsolicited result codes +CMCCSS<*x*> that are supported by the TE. The supported values for <x> are reported as a compound value, e.g. a TE supporting +CMCCSS1, +CMCCSS2 and +CMCCSS5 will report +CMCCS: (1,2,5) or +CMCCS: (1-2,5)

2 The call monitoring function is enabled for basic call information (unsolicited result code +CMCCSI)

3 The call monitoring function is enabled for basic call information and supplementary service information (unsolicited result codes +CMCCSI and +CMCCSS<x> / +CMCCSSEND)

<x>: integer type. <x> is the suffix in the unsolicited result codes +CMCCSS<x>.

<ccid*x*>: integer type. Call identification number as described in 3GPP TS 22.030 [19] subclause 6.5.5.1. This number can be used in +CHLD command operations. Value range is from 1 to N. N, the maximum number of simultaneous call control processes is implementation specific. The call identification number must not be reused until the unsolicited result code +CMCCSI has indicated that the <ccstatus>=1 (Idle).

<dir>: integer type

0 mobile originated (MO) call

1 mobile terminated (MT) call

<neg_status_present>: integer type. Indicates whether parameter <neg_status> has any valid information

0 No valid information in parameter <neg_status>. Parameter <neg_status> is set to zero.

1 Valid information in parameter <neg_status>.

<neg_status>: integer type as defined in the +CCMMD command

0 The parameter <neg_status> has no valid content. Parameter <SDP_md> is set to an empty string ("").

1 The <SDP_md> parameter describes the active media in the call.

2 The <SDP_md> parameter describes a proposed but not yet active new set of media for the call.

3 A proposed new set of media for the call was accepted by the remote party. The <SDP_md> parameter describes the active media in the call (if any).

4 A proposed new set of media for the call was rejected by the remote party. The <SDP_md> parameter describes the active media in the call (if any).

<SDP_md>: string type represented with IRA characters. Media description as per the +CDEFMP command. This parameter shall not be subject to conventional character conversion as per +CSCS. This parameter will be an empty string ("") if the call has no multimedia content.

<cs_mode>:integer type (bearer/teleservice). Applicable to CS calls only.

0 no relevant information about bearer/teleservice

1 voice

2 data

3 fax

4 voice followed by data, voice mode

5 alternating voice/data, voice mode

6 alternating voice/fax, voice mode

7 voice followed by data, data mode

8 alternating voice/data, data mode

9 alternating voice/fax, fax mode

255 unknown

<ccstatus>: integer type Indicating the state of the call.

1 Idle

2 Calling (MO); the call setup has been started

3 Connecting (MO); the call is in progress

4 Alerting (MO): an alert indication has been received

5 Alerting (MT); an alert indication has been sent

6 Active; the connection is established

7 Released; an outgoing (MO) call is released.

8 Released; an incoming (MT) call is released

9 User Busy

10 User Determined User Busy

11 Call Waiting (MO)

12 Call Waiting (MT)

13 Call Hold (MO)

14 Call Hold (MT)

<mpty>: integer type

0 call is not one of multiparty (conference) call parties

1 call is one of multiparty (conference) call parties

<numbertype>: integer type. Indicating type of information in parameter <number>.

0 No valid information in parameter <number>. <number> shall then be set to empty string ("").

1 Number in <number> according to URI including the prefix specifying the URI type (see command +CDU). Parameter <ton> has no relevant information and is set to zero.

2 Number in <number> according to one of the formats supported by 3GPP TS 24.008 [8] subclause 10.5.4.7)

<ton>: type of number in integer format (refer 3GPP TS 24.008 [8] subclause 10.5.4.7). The parameter is also set to zero when it has no meaningful content, e.g. when <numbertype>=1.

<number>: string type phone number in format specified by <numbertype>. The used character set should be the one selected with Select TE Character Set +CSCS. When no number is available, <number> shall be set to empty string ("").

<exittype>: integer type. Indicating type of information in parameter <exitcause>.

0 No valid information in parameter <exitcause>

1 Cause in <exitcause> according to 3GPP TS 24.008 [8], Annex H

2 Cause in <exitcause> according to 3GPP TS 24.229 [89], Annex A.2.1.4.1

<exitcause>: integer type. Additional information provided if relevant. If there is no relevant cause to report, or if <exittype>=0 the exitcause is set to 0 (<exitcause>=0).

<service>: integer type. Indication of the indicated (supplementary) service. It is vendor specific which of the services that are provided. The related unsolicited result codes +CMCCSS<*x*> are provided as applicable for a given <service>, e.g. the +CMCCSS5: <subaddr>,<satype> can be omitted when it is not relevant for the service, but can also be omitted if this information is not provided for a relevant service or if a vendor does not support parameters <subaddr> and <satype>.

0 No service

1 Originating identification presentation – CLIP / OIP, refer 3GPP TS 22.081 [3] and 3GPP TS 24.607 [119]
CLIP / OIP specific information can be provided in:
+CMCCSI (in parameters <numbertype>, <ton> and <number>)
Additional CLIP / OIP specific information can be provided in:
+CMCCSS1 (in parameter <service>)
+CMCCSS3 (in parameter <CLI_validity>, typically used when no <number> is available)
+CMCCSS5 (in parameters <subaddr> and <satype>, when applicable)

2 Originating identification restriction – CLIR / OIR, refer 3GPP TS 22.081 [3] and 3GPP TS 24.607 [119]

3 Terminating identification presentation – COLP / TIP, refer 3GPP TS 22.081 [3] and 3GPP TS 24.608 [120]
COLP / TIP specific information can be provided in:
+CMCCSI (in parameters <numbertype>, <ton> and <number>)
Additional COLP / TIP specific information can be provided in:
+CMCCSS1 (in parameter <service>)
+CMCCSS5 (in parameters <subaddr> and <satype>, when applicable)

4 Terminating identification restriction – COLR / TIR, refer 3GPP TS 22.081 [3] and 3GPP TS 24.608 [120]

5 Called line presentation – CDIP
Additional CDIP specific information can be provided in:
+CMCCSS1 (in parameter <service>)
+CMCCSS2 (in parameters <numbertype>, <ton> and <number>)
+CMCCSS5 (in parameters <subaddr> and <satype>, when applicable)

NOTE 2: The command +CDIP does not explicitly specify what "multiple called numbers" it is intended to support. +CMCCS can therefore not be more specific. The CDIP service in +CMCCS is therefore intended for manufacturers who already have chosen a manufacturer specific way to support +CDIP and needs to extend or replace +CDIP with support for SIP URIs. For manufacturers who do not already support the command +CDIP, the useage of the CDIP service in +CMCCS is deprecated.

6 Calling name presentation – CNAP, refer 3GPP TS 22.096 [93]
Additional CNAP specific information can be provided in:
+CMCCSS1 (in parameter <service>)
+CMCCSS4 (in parameter <name>)

7 Communication deflection – CD, refer 3GPP TS 22.072 [31] and 3GPP TS 24.604 [132]

8 Communication forwarding unconditional – CFU, refer 3GPP TS 22.082 [4] and 3GPP TS 24.604 [132]

9 Communication forwarding on busy user – CFB, refer 3GPP TS 22.082 [4] and 3GPP TS 24.604 [132]

10 Communication forwarding on no reply – CFNR, refer 3GPP TS 22.082 [4] and 3GPP TS 24.604 [132]

11 Communication forwarding on subscriber not reachable – CFNRc, refer 3GPP TS 22.082 [4] and 3GPP TS 24.604 [132]

12 Communication forwarding on not logged-in – CFNL, refer 3GPP TS 24.604 [132]

13 Communication diversion notification – CDIVN, refer 3GPP TS 24.604 [132]

14 Communication waiting – CW, refer 3GPP TS 22.083 [5] and 3GPP TS 24.615 [137]
Additional CW specific information can be provided in:
+CMCCSS1 (in parameter <service>)
+CMCCSS6 (in parameter <priority>)

15 Communication hold – HOLD, refer 3GPP TS 22.083 [5] and 3GPP TS 24.610 [135]

16 Conference – MPTY / CONF, refer 3GPP TS 22.084 [22] and 3GPP TS 24.605 [133]

17 Explicit communication transfer – ECT, refer 3GPP TS 22.091 [30] and 3GPP TS 24.629 [139]

18 Completion of communications to busy subscriber – CCBS, refer 3GPP TS 22.093 [123] and 3GPP TS 24.642 [140]

19 Completion of communications by no reply – CCNR, refer 3GPP TS 24.642 [140]

20 Communication barring of all outgoing calls – BAOC, refer 3GPP TS 22.088 [6] and 3GPP TS 24.611 [136]

21 Communication barring of all international outgoing calls except those directed to the home PLMN country – BOIC-exHC, refer 3GPP TS 22.088 [6] and 3GPP TS 24.611 [136]

22 Communication barring of all incoming calls – BAIC, refer 3GPP TS 22.088 [6] and 3GPP TS 24.611 [136]

23 Communication barring of incoming calls when roaming outside the home PLMN country – BIC-Roam, refer 3GPP TS 22.088 [6] and 3GPP TS 24.611 [136]

24 All Barring services, refer 3GPP TS 22.030 [19]

25 All outGoing barring services, refer 3GPP TS 22.030 [19]

26 All inComing barring services, refer 3GPP TS 22.030 [19]

27 Anonymous communication rejection – ACR, refer 3GPP TS 22.088 [6] and 3GPP TS 24.611 [136]

28 Advice of charge – AOC, refer 3GPP TS 22.085 [21] and 3GPP TS 24.654 [121]

29 Message waiting indication – MWI, refer 3GPP TS 24.606 [134]

30 Malicious communication identification, all outgoing calls – MCID, refer 3GPP TS 24.616 [l38]

31 Unstructured Supplementary Service Data – USSD, refer 3GPP TS 22.090 [23] and 3GPP TS 24.390 [131]

32 Customized Alerting Tones – CAT, refer 3GPP TS 24.182 [127]

33 Customized Ringing Signal – CRS, refer 3GPP TS 24.183 [128]

34 Flexible Alerting – FA, refer 3GPP TS 24.239 [129]

35 Personal Network Management – PNM, refer 3GPP TS 24.259 [130]

36 User-to-user signalling service 1 – UUS 1, refer 3GPP TS 22.087 [58] and 3GPP TS 24.229 [89]

37 User-to-user signalling service 2 – UUS 2, refer 3GPP TS 22.087 [58]

38 User-to-user signalling service 3 – UUS 3, refer 3GPP TS 22.087 [58]

39 All user-to-user signalling services, refer 3GPP TS 22.087 [58]

40 Follow me – FM, refer 3GPP TS 22.094 [124]

41 Multiple subscriber profile – MSP, refer 3GPP TS 22.097 [125]

42 Multicall – MC, refer 3GPP TS 22.135 [126]

43 enhanced multi-level precedence and pre-emption service – eMLPP, refer 3GPP TS 22.067 [54]

44 Closed User Group – CUG, refer 3GPP TS 22.085 [21] and 3GPP TS 24.654 [121]
Additional CUG specific information can be provided in:
`+CMCCSS1` (in parameter `<service>`)
`+CMCCSS7` (in parameter `<CUG_index>`)

256 - 511 Reserved for vendor specific services

`<CLI_validity>`: integer type. This parameter can provide details why `<number>` does not contain a calling party BCD number (refer 3GPP TS 24.008 [8] subclause 10.5.4.30). The parameter is not relevant for MO call types.

0 CLI valid

1 CLI has been withheld by the originator (refer 3GPP TS 24.008 [8] table 10.5.135a/3GPP TS 24.008 code "Reject by user")

2 CLI is not available due to interworking problems or limitations of originating network (refer 3GPP TS 24.008 [8] table 10.5.135a/3GPP TS 24.008 code "Interaction with other service")

3 CLI is not available due to calling party being of type payphone (refer 3GPP TS 24.008 [8] table 10.5.135a/3GPP TS 24.008 code "Coin line/payphone")

4 CLI is not available due to other reasons (refer 3GPP TS 24.008 [8] table 10.5.135a/3GPP TS 24.008 code "Unavailable")

When CLI is not available (<CLI_validity>=2, <CLI_validity>=3 or <CLI_validity>=4), <number> shall be an empty string ("") and <ton> value will not be significant. The parameter <numbertype> will be set to 0. Nevertheless, TA may return the recommended value 128 for <ton> (TON/NPI unknown in accordance with 3GPP TS 24.008 [8] subclause 10.5.4.7).

When CLI has been withheld by the originator, (<CLI validity>=1) and the CLIP is provisioned with the "override category" option (refer 3GPP TS 22.081 [3] and 3GPP TS 23.081 [40]), <number> and <ton> is provided. Otherwise, TA shall return the same setting for <number> and <type> as if the CLI was not available. The parameter <numbertype> shall be set as appliccable.

<name>: string type up to 80 characters long string containing the calling name.

<subaddr>: string type subaddress of format specified by <satype>.

<satype>: type of subaddress octet in integer format (refer 3GPP TS 24.008 [8] subclause 10.5.4.8) or RFC 4715 [122] appendix A.

<priority>: integer type indicating the eMLPP priority level of the call, values specified in 3GPP TS 22.067 [54].

<CUG_index>: string type. The parameter sets the CUG index for this <CUG_pointer>.

"0" ... "32767"	CUG index
""	no CUG index, indicated by empty string. Preferential CUG taken from subscriber data.

Implementation

Optional.

8.74 List of current calls +CLCCS

Table 8.74-1:+CLCCS action command syntax

Command	Possible response(s)
+CLCCS[=<ccidx>]	[+CLCCS: <ccid1>,<dir>,<neg_status_present>,<neg_status>,<SDP_md>,<cs_mode>,<ccstatus>,<mpty>,[,<numbertype>,<ton>,<number>[,<priority_present>,<priority>[,<CLI_validity_present>,<CLI_validity>]]] [<CR><LF>+CLCCS: <ccid2>,<dir>,<neg_status_present>,<neg_status>,<SDP_md>,<cs_mode>,<ccstatus>,<mpty>,[,<numbertype>,<ton>,<number>[,<priority_present>,<priority>[,<CLI_validity_present>,<CLI_validity>]]] [...]]] *+CME ERROR: <err>*
+CLCCS=?	

Description

Returns a list of current calls controlled by the MT for which the <ccid*x*> is allocated. The information returned is a subset of the information provided by the call monitoring function, see +CMCCS and its unsolicited result codes +CMCCSI and +CMCCSS<x> / +CMCCSSEND. For an originating call, the parameters <numbertype>, <ton> and <number> provide the number (line identity) information which has been dialled with +CDU or ATD. For a terminating call, the parameters <numbertype>, <ton> and <number> provide the number (line identity) information of the calling user. If no particular <ccid*x*> is included in the request, data for all allocated <ccid*x*> are returned. If the command succeeds but no <ccid*x*> is allocated, no information response is sent to the TE. Refer subclause 9.2 for possible <err> values.

Defined values

<ccid*x*>: integer type. Call identification number (see 3GPP TS 22.030 [19] subclause 6.5.5.1). This number can be used in +CHLD command operations. Value range is from 1 to N. N, the maximum number of simultaneous call control processes is implementation specific.

NOTE 1: The restrictions and limitations of the call identification number as described in 3GPP TS 22.030 [19] subclause 6.5.5.1 and 3GPP TS 22.084 [22] do not apply.

NOTE 2: When +CMCCS is supported, the call identification number is not reset until the unsolicited result code +CMCCSI has indicated that the <ccstatus>=1 (Idle).

<dir>: integer type

0 mobile originated (MO) call

1 mobile terminated (MT) call

<neg_status_present>: integer type. Indicates whether parameter <neg_status> has any valid information

0 No valid information in parameter <neg_status>. Parameter <neg_status> is set to zero.

1 Valid information in parameter <neg_status>.

<neg_status>: integer type as defined in the +CCMMD command

0 The parameter <neg_status> has no valid content. Parameter <SDP_md> is set to an empty string ("").

1 The <SDP_md> parameter describes the active media in the call.

2 The <SDP_md> parameter describes a proposed but not yet active new set of media for the call.

3 A proposed new set of media for the call was accepted by the remote party. The <SDP_md> parameter describes the active media in the call (if any).

4 A proposed new set of media for the call was rejected by the remote party. The <SDP_md> parameter describes the active media in the call (if any).

<SDP_md>: string type represented with IRA characters. SDP media description as per the +CDEFMP command. This parameter shall not be subject to conventional character conversion as per +CSCS. This parameter will be an empty string ("") if the call has no multimedia content.

<cs_mode>: integer type (bearer/teleservice)

0 no relevant information about bearer/teleservice

1 voice

2 data

3 fax

4 voice followed by data, voice mode

5 alternating voice/data, voice mode

6 alternating voice/fax, voice mode

7 voice followed by data, data mode

8 alternating voice/data, data mode

9 alternating voice/fax, fax mode

255 unknown

<ccstatus>: integer type. Indicating the state of the call.

1 Idle

2 Calling (MO); the call setup has been started

3 Connecting (MO); the call is in progress

4 Alerting (MO): an alert indication has been received

5 Alerting (MT); an alert indication has been sent

6 Active; the connection is established

7 Released; an outgoing (MO) call is released.

8 Released; an incoming (MT) call is released

9 User Busy

10 User Determined User Busy

11 Call Waiting (MO)

12 Call Waiting (MT)

13 Call Hold (MO)

14 Call Hold (MT)

<mpty>: integer type

0 call is not one of multiparty (conference) call parties

1 call is one of multiparty (conference) call parties

<numbertype>: integer type. Indicating type of information in parameter <number>.

0 No valid information in parameter <number>

1 Number in <number> according to URI including the prefix specifying the URI type (see command +CDU). Parameter <ton> has no relevant information and is set to zero.

2 Number in <number> according to one of the formats supported by 3GPP TS 24.008 [8] subclause 10.5.4.7)

<ton>: type of number in integer format (refer 3GPP TS 24.008 [8] subclause 10.5.4.7). The parameter is also set to zero when it has no meaningful content, e.g. when <numbertype>=1.

<number>: string type phone number in format specified by <numbertype>. This parameter shall not be subject to conventional character conversion as per +CSCS.

<priority_present>: integer type. Indicates whether parameter <priority> has any valid information

0 No valid information in parameter <priority>. Parameter <priority> is set to zero.

1 Valid information in parameter <priority>.

<priority>: integer type parameter indicating the eMLPP priority level of the call, values specified in 3GPP TS 22.067 [54]

<CLI_validity_present>: integer type. Indicates whether parameter <CLI_validity> has any valid information

0 No valid information in parameter <CLI_validity>. Parameter <priority> is set to zero.

1 Valid information in parameter <CLI_validity>.

<CLI_validity>: integer type. This parameter can provide details why <number> does not contain a calling party BCD number (refer 3GPP TS 24.008 [8] subclause 10.5.4.30). The parameter is not relevant for MO call types.

0 CLI valid

1 CLI has been withheld by the originator (refer 3GPP TS 24.008 [8] table 10.5.135a/3GPP TS 24.008 code "Reject by user")

2 CLI is not available due to interworking problems or limitations of originating network (refer 3GPP TS 24.008 [8] table 10.5.135a/3GPP TS 24.008 code "Interaction with other service")

3 CLI is not available due to calling party being of type payphone (refer 3GPP TS 24.008 [8] table 10.5.135a/3GPP TS 24.008 code "Coin line/payphone")

4 CLI is not available due to other reasons (refer 3GPP TS 24.008 [8] table 10.5.135a/3GPP TS 24.008 code "Unavailable")

When CLI is not available (<CLI_validity>=2, <CLI_validity>=3 or <CLI_validity>=4), <number> shall be an empty string ("") and <type> value will not be significant. The parameter <numbertype> will be set to 0. Nevertheless, TA may return the recommended value 128 for <ton> (TON/NPI unknown in accordance with 3GPP TS 24.008 [8] subclause 10.5.4.7).

When CLI has been withheld by the originator, (<CLI validity>=1) and the CLIP is provisioned with the "override category" option (refer 3GPP TS 22.081 [3] and 3GPP TS 23.081 [40]), <number> and <type> is provided. Otherwise, TA shall return the same setting for <number> and <type> as if the CLI was not available. The parameter <numbertype> shall be set as appliccable.

Implementation

Optional. Recommended when +CHLD command is implement.

This command supports all types of numbers (including SIP URIs) and can replace +CLCC.

8.75 Informative examples

Phone Activity Status (+CPAS) is a general command used to detect the presence of the MT, if there is an incoming call, or if there is a call in progress. This command is normally used before trying to operate the MT from the TE. Note that the activity status can change at any time after the execution of +CPAS, and hence the returned value can be obsolete. Detachment of the MT from the TA is indicated with a special final result code that indicates all errors related to the operation of the MT. Result code is +CME ERROR: <err>, where <err> is an integer or verbose value giving useful information about the reason for the command failure (refer subclause "Mobile Termination error result code +CME ERROR").

Set Phone Functionality (+CFUN) can be used to reset the MT or set the power consumption level of the MT by disabling certain parts of the MT (e.g. the transmit and receive RF circuits). Mobile Termination Control Mode (+CMEC) is a command which manages access sharing between the MT and the TE to operate the user interface of the MT. It has four subparameters which describe the access to keypad, display, indicators, and touch screen. Each subparameter has values for restricting the operation of the corresponding user interface part only to the MT or only to the TE, or to give the access for both of them.

Keypad Control command (+CKPD) is used to operate the keypad of the MT. Here lies the problem of different keypad types between manufacturers, and also between their MT models. The keypresses are sent to the MT as a string type

subparameter of this command. Each character in that string represents a key which will be logically pressed. A special character (colon) followed by any character can be used by manufacturers (or TE application programmers) to represent a key which is not defined in this profile. An escape character (semicolon) for direct string entering is also defined. All text between single semicolon characters is treated as an alphanumeric entry and is not converted to keypressings. All semicolon characters inside the text is duplicated in the TE and stripped back to one before entering them to the MT. Command has also optional second and third parameters which can be used to alter the time to strike each key, and the pause to wait between keystrokes (in tenths of a second). A special pause character (W or w) can be added in the string type subparameter for an extra pause of the same length as given by the third subparameter. In the following example alphanumeric mode is entered and a person predefined in the MT phonebook, "Ilkka", is called; each key is struck for half a second and pauses between strokes are a tenth of a second:

```
AT+CKPD="@:Ilkka:S",5,1
OK
```

Display Control command (`+CDIS`) is used both for writing to the display text fields and for reading the current status of the fields. Mobile Termination usually has a character set of its own, so the TA will do a conversion between the TE and the MT character sets. TE can have several character sets and the TA must be informed of the character set in use before starting to write or read the display. Character set is set with general command Select TE Character Set `+CSCS`. The `+CDIS=?` query command is a way to get information about the length of the fields. In the following example an MT is first queried about the supported conversions and the lengths of the fields. The response shows there are three ten character long and two six character long fields. Then the TE character set is set to be IRA and the current status of the display is read. The last command writes the text "Hello, I'm writing to display" in the three fields, and keeps the contents of the two other fields same (the last two commas could also be left out).

```
AT+CSCS=?;+CDIS=?
+CSCS: ("IRA","PCCP850","8859-1")
+CDIS: 10,10,10,6,6
OK
AT+CSCS="IRA"
OK
AT+CDIS?
+CDIS: "RADIOLINJA","","","Menu","Memory"
OK
AT+CDIS="IRA","Hello, I'm","writing to","display",,
OK
```

The writing is possible only when it is permitted by the Mobile Termination Control Mode command (and by the manufacturer). If a certain field is not writable (but is readable), writing to it is ignored. The order of the text fields is determined by manufacturers and follow the rule: first field is in the upper left corner, second in the next field to the right, and so on, until to the last field in the lower right corner.

Touch screen action Control command (+CTSA) is used to operate the touch screen of the MT. The x, y coordinates of the phone are fixed even if the device's orientation is changed. In the following example commands are sent to the MT to emulate a user drawing on the ME's touch screen; it is relevant that the gesture starts from the top of the touch screen. A gesture is emulated, starting at location 10,10 in a non-display area of the ME’s (touch) screen, then dragged to 50,50 (during which the gesture crosses the boundary between the non-display area and a display area), then dragged to 100,100 and finally the touch screen is released at location 100,100.

`AT+CSO=?`	obtain the touch screen orientation
`+CSO=2,0`	
`AT+CSS=?`	obtain the touch screen size
`+CSS=200,600`	
`AT+CDSB=?`	determine if a boundary between the non-display area and a display area exists, and its location
`+CDSB=20,20,180,580`	
`AT+CTSA=1,10,10`	start emulating a gesture
`AT+CTSA=1,50,50`	emulate that the gesture crosses the boundary between non-display area and a display area
`+CTSA=0,100,100`	end emulating the gesture

Indicators can be handled with Indicator Control command (`+CIND`). Its query command returns a short description (abbreviation) of the purpose of the indicators and the supported values for each indicator. The setting and reading is done similarly as with Display Control command. In the following example the indicators of a phone are queried, their current value is read, and the value of message indicator is tried to set (but it is forbidden):

```
AT+CIND=?
+CIND: ("memory",(0-2)),("call",(0,1)),("data",(0,1)),("roam",(0,1)),
("alpha",(0,1)),("message",(0,1)),("index1",(0-11)),("index2",(0-11)),
("index3",(0-11)),("signal",(0-5)),("service",(0,1)),("sel1",(0,1)),
("sel2",(0,1)),("sel3",(0,1)),("battchg",(0-5))
OK
```

```
AT+CIND?
+CIND: 1,0,0,0,0,1,0,0,0,3,1,0,0,0,5
OK
AT+CIND=,,,,,0
+CME ERROR: 10
```

The subparameter order in the command is defined by the query command order, not by the actual display order. The zero value of an indicator means that it is off (or in state which can be identified as "off"-state), value one means that the indicator is on (or in a state which is more substantial than "off"-state), value two is more substantial than one, and so on.

To this point, only operating through the TE is covered. But when MT can be operated also through its keypad, or touch screen, or there are changes in the status of the display elements, the information about these actions is given to the TE also. This can be solved only with unsolicited result codes which return keypad, display text and indicator, and touch screen events. Each event group has a result code of its own: `+CKEV` returns the key code and if the key pressed (1) or released (0), `+CDEV` returns the display text field running number (as specified by command `+CDIS`) and the new status of the field, and `+CIEV` returns the running number of the indicator (refer `+CIND`) and the new value of it, and `+CTEV` returns the location of the action performed on the touch screen. In the following example number key 1 is pressed, updated on the display, released, and signal strength changes its state to five, the touch screen is pressed at coordinates 10,10, and it is released at the same coordinates, 3 seconds after initially pressing the screen:

```
+CKEV: 49,1
+CDEV: 1,"1"
+CKEV: 49,0
+CIND: 10,5
+CTEV: 1,10,10,0;
+CTEV: 0,10,10,0,3000
```

Mobile Termination Event Reporting command (`+CMER`) has been specified for the purpose of controlling the sending of these unsolicited result codes to the TE. Four ways are provided to handle the buffering of the result codes (see figure 8). The first is to buffer them always. The second possibility is to discard them when in on-line data mode and otherwise forward them directly to the TE. The third possibility is to buffer them in data mode and otherwise forward them to the TE. The last possibility is to send them always to the TE (some inband technique - e.g. V.80 - is used in data mode to send the result codes within the data). This is the first subparameter of `+CMER` command. Next three subparameters are used to enable or disable each of the keypad, text field and indicator result codes. Sending codes can be enabled either so that only events generated from the MT user interface are returned, or so that also events caused by Keypad, Display and Indicator Control commands are returned. The fifth subparameter controls the flushing of the buffer when the value of the first subparameter is changed to a value from one to three.

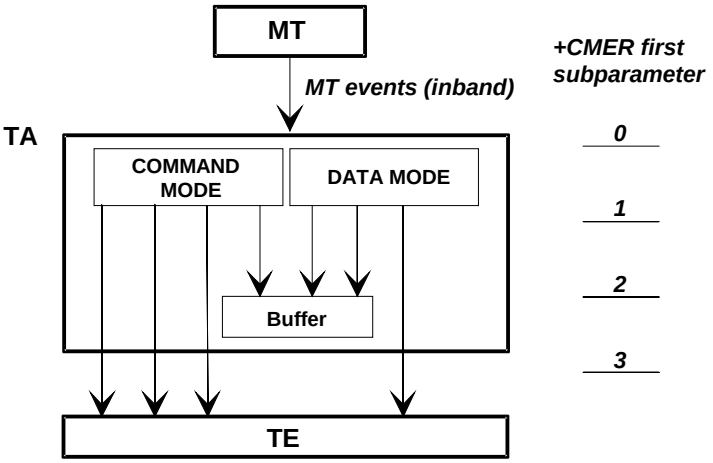

Figure 8: Mobile termination event reporting

An example of complete setup of the TA where TE takes the control of keypad, but does not want to write to display nor control the indicators (in the start MT is powered off):

```
AT+CMEE=2;+CREG=1          (use verbose <err> values; report registration)
OK
AT+CPAS                    (query MT status)
+CPAS: 5                   (MT is asleep)
OK
AT+CFUN=1                  (set MT to full functionality state)
```

```
+CME ERROR: SIM PIN required      (SIM requests PIN)
AT+CPIN="1234"
+CME ERROR: incorrect password    (user entered wrong PIN)
AT+CPIN="4321"
OK                                (correct PIN)
AT+COPS=0,0                       (ask for automatic operator selection and registration)
OK
+CREG: 1                          (registered in the network)
AT+COPS?
+COPS: 0,0,"RADIOLINJA"           (get the operator name)
OK
AT+CMEC=1,0,0                     (take over the keypad, leave display to MT)
OK
AT+CDIS=?;+CIND=?                 (query display text and indicator formats)
+CDIS: 10,10,10,6,6
+CIND: ("memory",(0-2)),("call",(0,1)),("data",(0,1)),("roam",(0,1)),
("alpha",(0,1)),("message",(0,1)),("index1",(0-11)),("index2",(0-11)),
("index3",(0-11)),("signal",(0-5)),("service",(0,1)),("sel1",(0,1)),
("sel2",(0,1)),("sel3",(0,1)),("battchg",(0-5))
OK
AT+CSCS="IRA"                     (set TE character set for display text results)
OK
AT+CMER=1,0,2,2,0                 (return display text and indicator result codes when
OK                                  in command state, in data mode discard them)
AT+CDIS?;+CIND?                   (read current state of display texts and indicators)
+CDIS: "","","    12345","Menu","Memory"    (user had pressed number buttons before
+CIND: 1,0,0,0,0,1,0,0,0,3,1,0,0,0,5          TE took control with +CMEC)
OK
AT+CKPD="C",20                    (clear main display text '12345' by holding the
OK                                  'clear' button down two seconds)
+CDEV: 3,"1234"                   (first only one character deleted)
+CDEV: 3,""                       (while holding continues, whole display is cleared)
+CDEV: 1,"RADIOLINJA"             (operator name comes to the display)
```

The start of the previous example could go as follows when MT has already been powered on but is waiting for the PIN:

```
AT+CMEE=2;+CREG=1                 (use verbose <err> values; report registration)
OK
AT+CPAS                           (query MT status)
+CPAS: 0                          (MT is ready to receive commands)
OK
AT+CPIN?                          (is MT asking passwords?)
+CPIN: SIM PIN                    (yes, SIM PIN required)
AT+CPIN="4321"
OK                                (correct PIN)
```

One of the most regular operations done through the MT user interface is phonebook control. To lessen the workload of the TE, some direct commands for phonebook reading and writing are practical. Command Select Phonebook Memory Storage +CPBS query version returns supported phonebook memories, read version returns current settings, and set version selects the memory. For GSM, the normal storages are SIM, MT and TA.

Read Phonebook Entries (+CPBR) can be used to read either one or many phonebook locations at the same time. A regular phonebook entry consists of three elements: memory index number, the phone number and its alphanumeric equivalent given by the user. Query version of this returns supported index values of the selected memory, and the maximum lengths of the number and alphanumeric elements. The query version of the Write Phonebook Entry command (+CPBW) is similar, but the action version sets or clears an entry in the phonebook. Find Phonebook Entries (+CPBF) can be used to search alphanumeric entries starting with specific string. An example where the whole phonebook of the MT is read, index number four is cleared, and number three is written:

```
AT+CPBS=?
+CPBS: ("ME","SM")                (MT and SIM have phonebooks)
OK
AT+CPBS="ME"                      (select MT memory)
OK
AT+CPBR=?                         (read index range and element lengths)
+CPBR: (1-99),30,30
OK
AT+CPBR=1,99                      (read all entries but only the ones set are returned)
+CPBR: 1,"931123456",129,"Ilkka"
+CPBR: 2,"9501234567",129,""
+CPBR: 4,"901234567",129,"Hesari"
OK
AT+CPBW=4;+CPBW=3,"921123456",,"TS"  (clear index 4 and write index 3)
OK
```

9 Mobile termination errors

9.1 Report mobile termination error +CMEE

Table 110: +CMEE parameter command syntax

Command	Possible response(s)
+CMEE=[<n>]	
+CMEE?	+CMEE: <n>
+CMEE=?	+CMEE: (list of supported <n>s)

Description

Set command disables or enables the use of final result code +CME ERROR: <err> as an indication of an error relating to the functionality of the MT. When enabled, MT related errors cause +CME ERROR: <err> final result code instead of the regular ERROR final result code. ERROR is returned normally when error is related to syntax, invalid parameters, or TA functionality.

Test command returns values supported as a compound value.

Defined values

<n>: integer type.

0 disable +CME ERROR: <err> result code and use ERROR instead

1 enable +CME ERROR: <err> result code and use numeric <err> values (refer subclause 9.2)

2 enable +CME ERROR: <err> result code and use verbose <err> values (refer subclause 9.2)

Implementation

Mandatory for <n> values 0 and 1.

9.1a Report mobile originated location request error +CMOLRE

Table 9.1a-1: +CMOLRE parameter command syntax

Command	Possible response(s)
+CMOLRE=[<n>]	
+CMOLRE?	+CMOLRE: <n>
+CMOLRE=?	+CMOLRE: (list of supported <n>s)

Description

Set command disables or enables the verbose format of unsolicited result code +CMOLRE: <err> as an indication of an error relating to the functionality for the mobile originated location request (MO-LR) error reporting format. When enabled, MT related verbose error cause is given.

Test command returns values supported as a compound value.

Defined values

<n>: integer type.

0 disable. This will give +CMOLRE: <err> result code with numeric <err> values (refer subclause 9.3)

1 enable. This will give +CMOLRE: <err> result code with verbose <err> values (refer subclause 9.3)

Implementation

Optional.

9.2 Mobile termination error result code +CME ERROR

9.2.0 General

The operation of +CME ERROR: <err> final result code is similar to the regular ERROR result code: if +CME ERROR: <err> is the result code for any of the commands in a command line, none of the following commands in the same command line is executed (neither ERROR nor OK result code shall be returned as a result of a completed command line execution). The format of <err> can be either numeric or verbose. This is set with command +CMEE (refer subclause 9.1).

NOTE: ITU-T Recommendation V.250 [14] command V does not affect the format of this result code.

<err> values (numeric format followed by verbose format):

All values below 256 are reserved.

Values in the range 0 - 100 are reserved for general errors.

Values in the range 101 - 150 are reserved for use by GPRS and EPS.

Values in the range 151 - 170 are reserved for use by VBS/VGCS and eMLPP.Values in the range 171 - 256 can be used by GPRS or by EPS.

9.2.1 General errors

Numeric	Text
0	phone failure
1	no connection to phone
2	phone-adaptor link reserved
3	operation not allowed
4	operation not supported
5	PH-SIM PIN required
6	PH-FSIM PIN required
7	PH-FSIM PUK required
10	SIM not inserted (See NOTE 1)
11	SIM PIN required
12	SIM PUK required
13	SIM failure (See NOTE 1)
14	SIM busy (See NOTE 1)
15	SIM wrong (See NOTE 1)
16	incorrect password

17	SIM PIN2 required
18	SIM PUK2 required
20	memory full
21	invalid index
22	not found
23	memory failure
24	text string too long
25	invalid characters in text string
26	dial string too long
27	invalid characters in dial string
30	no network service
31	network timeout
32	network not allowed - emergency calls only
40	network personalization PIN required
41	network personalization PUK required
42	network subset personalization PIN required
43	network subset personalization PUK required
44	service provider personalization PIN required
45	service provider personalization PUK required
46	corporate personalization PIN required
47	corporate personalization PUK required
48	hidden key required (See NOTE 2)
49	EAP method not supported
50	Incorrect parameters
100	unknown

NOTE 1: This error code is also applicable to UICC.

NOTE 2: This key is required when accessing hidden phonebook entries.

9.2.2 GPRS and EPS-related errors

9.2.2.1 Errors related to a failure to perform an attach

Numeric	Text
103	Illegal MS (#3)
106	Illegal ME (#6)
107	GPRS services not allowed (#7)
108	GPRS services and non-GPRS services not allowed (#8)
111	PLMN not allowed (#11)
112	Location area not allowed (#12)
113	Roaming not allowed in this location area (#13)
114	GPRS services not allowed in this PLMN (#14)
115	No Suitable Cells In Location Area (#15)
122	Congestion (#22)
125	Not authorized for this CSG (#25)
172	Semantically incorrect message (#95)
173	Mandatory information element error (#96)
174	Information element non-existent or not implemented (#97)
175	Conditional IE error (#99)
176	Protocol error, unspecified (#111)

NOTE: Values in parentheses are 3GPP TS 24.008 [8] cause codes.

9.2.2.2 Errors related to a failure to activate a context

Numeric	Text
177	Operator Determined Barring (#8)
126	insufficient resources (#26)
127	missing or unknown APN (#27)
128	unknown PDP address or PDP type (#28)
129	user authentication failed (#29)
130	activation rejected by GGSN, Serving GW or PDN GW (#30)
131	activation rejected, unspecified (#31)
132	service option not supported (#32)
133	requested service option not subscribed (#33)
134	service option temporarily out of order (#34)
140	feature not supported (#40)
141	semantic error in the TFT operation (#41)
142	syntactical error in the TFT operation (#42)
143	unknown PDP context (#43)
144	semantic errors in packet filter(s) (#44)
145	syntactical errors in packet filter(s) (#45)
146	PDP context without TFT already activated (#46)
149	PDP authentication failure
178	maximum number of PDP contexts reached (#65)
179	requested APN not supported in current RAT and PLMN combination (#66)
180	request rejected, Bearer Control Mode violation (#48)

NOTE: Values in parentheses are 3GPP TS 24.008 [8] cause codes.

9.2.2.3 Errors related to a failure to disconnect a PDN

Numeric	Text
171	Last PDN disconnection not allowed (#49)

NOTE 1: This error is returned when the MT detects an attempt to disconnect the last PDN or the network returns a response message with cause value #49.

NOTE 2: Values in parentheses are 3GPP TS 24.301 [83] cause codes.

NOTE 3: The numeric error code for "Last PDN disconnection not allowed (#49)" changed to 171 since 3GPP Rel-11.

9.2.2.4 Other GPRS errors

Numeric	Text
148	unspecified GPRS error
150	invalid mobile class

9.2.3 VBS, VGCS and eMLPP-related errors

Numeric	Text
151	VBS/VGCS not supported by the network
152	No service subscription on SIM
153	No subscription for group ID
154	Group Id not activated on SIM
155	No matching notification
156	VBS/VGCS call already present
157	Congestion
158	Network failure
159	Uplink busy

160	No access rights for SIM file
161	No subscription for priority
162	operation not applicable or not possible
163	Group Id prefixes not supported
164	Group Id prefixes not usable for VBS
165	Group Id prefix value invalid

Implementation
Mandatory for numeric format codes applicable to implemented command set.

9.3 Mobile termination error result code +CMOLRE

9.3.1 General

The operation of `+CMOLRE: <err>` unsolicited result code is similar to the regular `ERROR` result code. The format of `<err>` can be either numeric or verbose. This is set with command `+CMOLRE` (refer subclause 9.1a).

`<err>` values (numeric format followed by verbose format):

9.3.2 Errors

Numeric	Text
0	Method not supported
1	Additional assistance data reqired
2	Not enough satellites
3	UE busy (See NOTE)
4	Network error
5	Failed to open internet connection, too many connections
6	Failed to open internet connection, too many users
7	Failure due to handover
8	Internet connection failure
9	Memory error
255	Unknown error

NOTE: Error code 3 (UE busy) indicates there is already one ongoing positioning session and the UE does not support multiple simultaneous sessions

9.4 Informative examples

An example of TA responses with all three `+CMEE` values when MT manufacturer identification is requested but MT is not connected to the TA:

```
AT+CMEE=0     (+CME ERROR shall not be used)
OK
AT+CGMI
ERROR
AT+CMEE=1     (use numeric <err>)
OK
AT+CGMI
+CME ERROR: 1
AT+CMEE=2     (use verbose <err>)
OK
AT+CGMI
+CME ERROR: no connection to phone
```

10 Commands for packet domain

10.0 General

This clause defines commands that a TE can use to control a MT supporting packet switched services. Some aspects of a Packet Domain MT are described in 3GPP TS 27.060 [34].

It is anticipated that Packet Domain MTs will vary widely in functionality. At one extreme, a MT supporting CS/PS or class-A mode of operation might support multiple PDP types as well as circuit switched data, and use multiple external networks and QoS profiles. At the other extreme a MT supporting only PS or class-C mode of operation might support only a single PDP type using a single external network, and rely on the HLR to contain the PDP context definition.

A comprehensive set of Packet Domain-specific commands is defined in subclause 10.1 to provide the flexibility needed by the more complex MT. The commands are designed to be expandable to accommodate new PDP types and interface protocols, merely by defining new values for many of the parameters. Multiple contexts can be activated if the interface link-layer protocol is able to support them. The commands use the extended information and error message capabilities described in this specification.

For MTs of intermediate complexity, most commands have simplified forms where certain parameters can be omitted.

For the simplest MTs, and for backwards compatibility with existing communications software, it is possible to control access to the Packet Domain using existing modem-compatible commands. A special dial-string syntax is defined for use with the D command. This "modem compatible" mode of operation is described in subclause 10.2.

A discussion on the interaction of the AT commands, Packet Domain Management and Packet Data Protocols, together with examples of command sequences for a number of applications can be found in 3GPP TS 27.060 [34].

10.1 Commands specific to MTs supporting the packet domain

10.1.0 General remark about EPS bearer contexts and PDP contexts

Accordingly to 3GPP TS 23.401 [82], there is a 1 to 1 mapping between active EPS bearer context and active PDP context:

- An active default EPS bearer context is associated with an active non secondary PDP context.
- An active dedicated EPS bearer context is associated with an active secondary PDP context.

In consequence to the implicit logical relation between EPS PDN connection and its associated Default EPS Bearer, hereafter a same non secondary PDP context identifier `<p_cid>` can be used to refer either an EPS PDN connection context or its associated Default EPS Bearer context.

As dedicated EPS bearer contexts are activated by the network, the network can then activate a new dedicated EPS bearer or modify an existing one to fulfil the request.For bearer resources activated by the network a context identifier is allocated by the MT/TA.

For easy reading the term PDP context is used for PDP contexts in UMTS/GPRS as well as PDN/default EPS bearers and traffic flows in EPS.

The feature "initial PDP context" may be supported and is a manufacturer specific option. For this option, the context with `<cid>=0` (context number 0) is defined upon startup and does not need to be created with the `+CGDCONT` command. The initial PDP context has particular manufacturer specific default settings disassociated with any other default settings of `+CGDCONT`. When in E-UTRAN or according to the AT-command `+CIPCA` in GERAN and UTRAN, the initial PDP context is automatically activated by the MT following a successful registration to the network. If all active contexts are deactivated, the initial PDP context can be (re)established. This is manufacturer specific and depends on the current RAT as well as how the active contexts are deactivated.

NOTE: Care must be taken to secure that repetitive PDP context activations / deactivations are not performed and that PDP contexts are not activated in situations where it is a determined choice by the terminal or the network to discontinue connectivity. Examples of such deliberate discontinuation of connectivity are the AT-commands +CGATT=0 or +CGACT=0, receipt of a detach request from the network with "re-attach not required" or when all PDP contexts are deactivated by the network.

Table 10.1.0-1: AT commands/results applicable for EPS (equivalence between PDP context / PDN Connection or Default EPS Bearer)

AT commands	Comments
`+CGDCONT`	Used to define PDN connection for EPS.
`+CGACT`	Used to activate a bearer resource for EPS.
`+CGCONTRDP`	Used to show dynamically allocated PDN parameters.
`+CGEV: xxx ...`	Used to indicate EPS bearers operations status.

Table 10.1.0-2: AT commands/results applicable for EPS (equivalence between PDP context / EPS Bearer Resources)

AT commands	Comments
`+CGACT`	Used to activate a modification of a PDP context or EPS bearer resource.
`+CGDSCONT`	Used to define EPS Bearer Resource for a specific PDN for EPS.
`+CGSCONTRDP`	Used to show dynamically allocated EPS Bearer Resource parameters.
`+CGCMOD`	Used to request a modification of a PDP context or EPS Bearer Resource.
`+CGTFT`	Used to define a Traffic Flow Template for a PDP context or a Traffic Flow Aggregate for an EPS bearer resource.
`+CGTFTRDP`	Used to show the network assigned Traffic Flow Template for an EPS bearer resource.
`+CGEQOS`	Used to define the EPS bearer resource Quality of Service parameter. In UMTS/GPRS mode this would hold a mapping function to the UMTS/GPRS QoS parameters.
`+CGEQOSRDP`	Used to show the network assigned EPS QoS parameters for an EPS bearer resource. In UMTS/GPRS mode this would hold a mapping function to the UMTS/GPRS QoS parameters.
`+CGEV: xxx ...`	Used to indicate EPS PDN connection and bearer resources operations status

Table 10.1.0-3: AT commands applicable for EPS

AT commands	Comments
+CGATT	Used to attach/detach the MT from the Packet Domain service.

10.1.1 Define PDP context +CGDCONT

Table 111: +CGDCONT parameter command syntax

Command	Possible response(s)
+CGDCONT=[<cid>[,<PDP_type>[,<APN>[,<PDP_addr>[,<d_comp>[,<h_comp>[,<IPv4AddrAlloc>[,<emergency indication>[,<P-CSCF_discovery>[,<IM_CN_Signalling_Flag_Ind>]]]]]]]]]	
+CGDCONT?	[+CGDCONT: <cid>,<PDP_type>,<APN>,<PDP_addr>,<d_comp>,<h_comp>[,<IPv4AddrAlloc>[,<emergency indication>[,<P-CSCF_discovery>[,<IM_CN_Signalling_Flag_Ind>]]]]] [<CR><LF>+CGDCONT: <cid>,<PDP_type>,<APN>,<PDP_addr>,<d_comp>,<h_comp>[,<IPv4AddrAlloc>[,<emergency indication>[,<P-CSCF_discovery>[,<IM_CN_Signalling_Flag_Ind>]]]] [...]]
+CGDCONT=?	+CGDCONT: (range of supported <cid>s),<PDP_type>,,,(list of supported <d_comp>s),(list of supported <h_comp>s),(list of supported <IPv4AddrAlloc>s),(list of supported <emergency indication>s),(list of supported <P-CSCF_discovery>s),(list of supported <IM_CN_Signalling_Flag_Ind>s) [<CR><LF>+CGDCONT: (range of supported <cid>s),<PDP_type>,,,(list of supported <d_comp>s),(list of supported <h_comp>s),(list of supported <IPv4AddrAlloc>s),(list of supported <emergency indication>s),(list of supported <P-CSCF_discovery>s),(list of supported <IM_CN_Signalling_Flag_Ind>s) [...]]

Description

The set command specifies PDP context parameter values for a PDP context identified by the (local) context identification parameter, <cid>. The number of PDP contexts that may be in a defined state at the same time is given by the range returned by the test command.

For EPS the PDN connection and its associated EPS default bearer is identified herewith. For EPS the <PDP_addr> parameter value shall be omitted.

A special form of the set command, +CGDCONT=<cid> causes the values for context number <cid> to become undefined.

If the initial PDP context is supported, the context with <cid>=0 is automatically defined at startup, see subclause 10.1.0. As all other contexts, the parameters for <cid>=0 can be modified with +CGDCONT. If the initial PDP context is supported, +CGDCONT=0 resets context number 0 to its particular default settings.

The read command returns the current settings for each defined context.

The test command returns values supported as a compound value. If the MT supports several PDP types, <PDP_type>, the parameter value ranges for each <PDP_type> are returned on a separate line.

Defined values

<cid>: integer type; specifies a particular PDP context definition. The parameter is local to the TE-MT interface and is used in other PDP context-related commands. The range of permitted values (minimum value = 1 or if the initial PDP context is supported (see subclause 10.1.0), minimum value = 0) is returned by the test form of the command.

NOTE 1: The <cid>s for network-initiated PDP contexts will have values outside the ranges indicated for the <cid> in the test form of the commands +CGDCONT and +CGDSCONT.

<PDP_type>: string type; specifies the type of packet data protocol

X.25	ITU-T/CCITT X.25 layer 3 (Obsolete)
IP	Internet Protocol (IETF STD 5 [103])
IPV6	Internet Protocol, version 6 (see RFC 2460 [106])
IPV4V6	Virtual <PDP_type> introduced to handle dual IP stack UE capability. (See 3GPP TS 24.301 [83])
OSPIH	Internet Hosted Octect Stream Protocol (Obsolete)
PPP	Point to Point Protocol (IETF STD 51 [104])

NOTE 2: Only IP, IPV6 and IPV4V6 values are supported for EPS services.

<APN>: string type; a logical name that is used to select the GGSN or the external packet data network.

If the value is null or omitted, then the subscription value will be requested.

<PDP_addr>: string type; identifies the MT in the address space applicable to the PDP.

If the parameter value is null or omitted, then a value may be provided by the TE during the PDP startup procedure or, failing that, a dynamic address will be requested.

The read form of the command will continue to return the null string even if an address has been allocated during the PDP startup procedure. The allocated address(es) may be read using the +CGPADDR command.

When +CGPIAF is supported, its settings can influence the format of this parameter returned with the read form of +CGDCONT.

NOTE 3: For EPS, this field or the parameter value of the field is omitted.

<d_comp>: integer type; controls PDP data compression (applicable for SNDCP only) (refer 3GPP TS 44.065 [61])

0 off

1 on (manufacturer preferred compression)

2 V.42bis

3 V.44

<h_comp>: integer type; controls PDP header compression (refer 3GPP TS 44.065 [61] and 3GPP TS 25.323 [62])

0 off

1 on (manufacturer preferred compression)

2 RFC 1144 [105] (applicable for SNDCP only)

3 RFC 2507 [107]

4 RFC 3095 [108] (applicable for PDCP only)

<IPv4AddrAlloc>: integer type; controls how the MT/TA requests to get the IPv4 address information

0 IPv4 Address Allocation through NAS Signalling

1 IPv4 Address Allocated through DHCP

<emergency indication>: integer type; indicates whether the PDP context is for emergency bearer services or not.

0 PDP context is not for emergency bearer services

1 PDP context is for emergency bearer services

<P-CSCF_discovery>: integer type; influences how the MT/TA requests to get the P-CSCF address, see 3GPP TS 24.229 [89] annex B and annex L.

0 Preference of P-CSCF address discovery not influenced by +CGDCONT

1 Preference of P-CSCF address discovery through NAS Signalling

2 Preference of P-CSCF address discovery through DHCP

<IM_CN_Signalling_Flag_Ind>: integer type; indicates to the network whether the PDP context is for IM CN subsystem-related signalling only or not.

0 UE indicates that the PDP context is not for IM CN subsystem-related signalling only

1 UE indicates that the PDP context is for IM CN subsystem-related signalling only

Implementation

Mandatory unless only a single subscribed context is supported.

10.1.2 Define secondary PDP context +CGDSCONT

Table 112: +CGDSCONT parameter command syntax

Command	Possible response(s)
+CGDSCONT=[<cid>,<p_cid>[,<d_comp>[,<h_comp>[,<IM_CN_Signalling_Flag_Ind>]]]]	
+CGDSCONT?	[+CGDSCONT: <cid>,<p_cid>,<d_comp>,<h_comp>,<IM_CN_Signalling_Flag_Ind>] [<CR><LF>+CGDSCONT: <cid>,<p_cid>,<d_comp>,<h_comp>,<IM_CN_Signalling_Flag_Ind> [...]]
+CGDSCONT=?	+CGDSCONT: (range of supported <cid>s),(list of <p_cid>s for active primary contexts),(list of supported <d_comp>s),(list of supported <h_comp>s),(list of supported <IM_CN_Signalling_Flag_Ind>s)

Description

The set command specifies PDP context parameter values for a Secondary PDP context identified by the (local) context identification parameter, <cid>. The number of PDP contexts that may be in a defined state at the same time is given by the range returned by the test command.

In EPS the command is used to define traffic flows.

A special form of the set command, +CGDSCONT=<cid> causes the values for context number <cid> to become undefined.

NOTE: If the initial PDP context is supported, the context with <cid>=0 is automatically defined at startup, see subclause 10.1.0.

The read command returns the current settings for each defined context.

The test command returns values supported as a compound value.

Defined values

<cid>: integer type; which specifies a particular PDP context definition. The parameter is local to the TE-MT interface and is used in other PDP context-related commands. The range of permitted values (minimum value = 1) is returned by the test form of the command.

NOTE: The <cid>s for network-initiated PDP contexts will have values outside the ranges indicated for the <cid> in the test form of the commands +CGDCONT and +CGDSCONT.

<p_cid>: integer type; specifies a particular PDP context definition which has been specified by use of the +CGDCONT command. The parameter is local to the TE-MT interface. The list of permitted values is returned by the test form of the command.

<d_comp>: integer type; controls PDP data compression (applicable for SNDCP only) (refer 3GPP TS 44.065 [61])

0 off

1 on (manufacturer preferred compression)

2 V.42bis

3 V.44

<h_comp>: integer type; controls PDP header compression (refer 3GPP TS 44.065 [61] and 3GPP TS 25.323 [62])

0 off

1 on (manufacturer preferred compression)

2 RFC 1144 [105] (applicable for SNDCP only)

3 RFC 2507 [107]

4 RFC 3095 [108] (applicable for PDCP only)

<IM_CN_Signalling_Flag_Ind>: integer type; indicates to the network whether the PDP context is for IM CN subsystem-related signalling only or not.

0 UE indicates that the PDP context is not for IM CN subsystem-related signalling only

1 UE indicates that the PDP context is for IM CN subsystem-related signalling only

Implementation

Optional.

10.1.3 Traffic flow template +CGTFT

Table 113: +CGTFT parameter command syntax

Command	Possible Response(s)
+CGTFT=[<cid>,[<packet filter identifier>,<evaluation precedence index>[,<remote address and subnet mask>[,<protocol number (ipv4) / next header (ipv6)>[,<local port range>[,<remote port range>[,<ipsec security parameter index (spi)>[,<type of service (tos) (ipv4) and mask / traffic class (ipv6) and mask>[,<flow label (ipv6)>[,<direction>]]]]]]]]]]	*+CME ERROR: <err>*
+CGTFT?	[+CGTFT: <cid>,<packet filter identifier>,<evaluation precedence index>,<remote address and subnet mask>,<protocol number (ipv4) / next header (ipv6)>,<local port range>,<remote port range>,<ipsec security parameter index (spi)>,<type of service (tos) (ipv4) and mask / traffic class (ipv6) and mask>,<flow label (ipv6)>,<direction>] [<CR><LF>+CGTFT: <cid>,<packet filter identifier>,<evaluation precedence index>,<remote address and subnet mask>,<protocol number (ipv4) / next header (ipv6)>,<local port range>, <remote port range>,<ipsec security parameter index (spi)>,<type of service (tos) (ipv4) and mask / traffic class (ipv6) and mask>,<flow label (ipv6)>,<direction> [...]]

Command	Possible Response(s)
+CGTFT=?	+CGTFT: <PDP_type>,(list of supported <packet filter identifier>s),(list of supported <evaluation precedence index>s),(list of supported <remote address and subnet mask>s),(list of supported <protocol number (ipv4) / next header (ipv6)>s),(list of supported <local port range>s),(list of supported <remote port range>s),(list of supported <ipsec security parameter index (spi)>s),(list of supported <type of service (tos) (ipv4) and mask / traffic class (ipv6) and mask>s),(list of supported <flow label (ipv6)>s),(list of supported <direction>s) [<CR><LF>+CGTFT: <PDP_type>,(list of supported <packet filter identifier>s),(list of supported <evaluation precedence index>s),(list of supported <remote address and subnet mask>s),(list of supported <protocol number (ipv4) / next header (ipv6)>s),(list of supported <local port range>s),(list of supported <remote port range>s),(list of supported <ipsec security parameter index (spi)>s),(list of supported <type of service (tos) (ipv4) and mask / traffic class (ipv6) and mask>s),(list of supported <flow label (ipv6)>s),(list of supported <direction>s) [...]]

Description

This command allows the TE to specify a Packet Filter - PF for a Traffic Flow Template - TFT that is used in the GGSN in UMTS/GPRS and Packet GW in EPS for routing of packets onto different QoS flows towards the TE. The concept is further described in the 3GPP TS 23.060 [47]. A TFT consists of from one and up to 16 Packet Filters, each identified by a unique <packet filter identifier>. A Packet Filter also has an <evaluation precedence index> that is unique within all TFTs associated with all PDP contexts that are associated with the same PDP address.

The set command specifies a Packet Filter that is to be added to the TFT stored in the MT and used for the context identified by the (local) context identification parameter, <cid>. The specified TFT will be stored in the GGSN in UMTS/GPRS and Packet GW in EPS only at activation or MS-initiated modification of the related context. Since this is the same parameter that is used in the +CGDCONT and +CGDSCONT commands, the +CGTFT command is effectively an extension to these commands. The Packet Filters consist of a number of parameters, each of which may be set to a separate value.

A special form of the set command, +CGTFT=<cid> causes all of the Packet Filters in the TFT for context number <cid> to become undefined. At any time there may exist only one PDP context with no associated TFT amongst all PDP contexts associated to one PDP address. At an attempt to delete a TFT, which would violate this rule, an ERROR or +CME ERROR response is returned. Extended error responses are enabled by the +CMEE command. Refer subclause 9.2 for possible <err> values.

The read command returns the current settings for all Packet Filters for each defined context.

The test command returns values supported as a compound value. If the MT supports several PDP types, the parameter value ranges for each PDP type are returned on a separate line. TFTs shall be used for PDP-type IP and PPP only. For

PDP-type PPP a TFT is applicable only when IP traffic is carried over PPP. If PPP carries header-compressed IP packets, then a TFT cannot be used.

Defined values

<cid>: integer type. Specifies a particular PDP context definition (see the +CGDCONT and +CGDSCONT commands).

<PDP_type>: string type. Specifies the type of packet data protocol (see the +CGDCONT command).

For the following parameters, see also 3GPP TS 23.060 [47]:

<packet filter identifier>: integer type. Value range is from 1 to 16.

<evaluation precedence index>: integer type. The value range is from 0 to 255.

<remote address and subnet mask>: string type. The string is given as dot-separated numeric (0-255) parameters on the form:
"a1.a2.a3.a4.m1.m2.m3.m4" for IPv4 or
"a1.a2.a3.a4.a5.a6.a7.a8.a9.a10.a11.a12.a13.a14.a15.a16.m1.m2.m3.m4.m5.m6.m7.m8.m9.m10.m11.m12.m13.m14.m15.m16", for IPv6.

When +CGPIAF is supported, its settings can influence the format of this parameter returned with the read form of +CGTFT.

<protocol number (ipv4) / next header (ipv6)>: integer type. Value range is from 0 to 255.

<local port range>: string type. The string is given as dot-separated numeric (0-65535) parameters on the form "f.t".

<remote port range>: string type. The string is given as dot-separated numeric (0-65535) parameters on the form "f.t".

<ipsec security parameter index (spi)>: numeric value in hexadecimal format. The value range is from 00000000 to FFFFFFFF.

<type of service (tos) (ipv4) and mask / traffic class (ipv6) and mask>: string type. The string is given as dot-separated numeric (0-255) parameters on the form "t.m".

<flow label (ipv6)>: numeric value in hexadecimal format. The value range is from 00000 to FFFFF. Valid for IPv6 only.

<direction>: integer type. Specifies the transmission direction in which the packet filter shall be applied.

0 Pre-Release 7 TFT filter (see 3GPP TS 24.008 [8], table 10.5.162)

1 Uplink

2 Downlink

3 Birectional (Up & Downlink)

Some of the above listed attributes may coexist in a Packet Filter while others mutually exclude each other, the possible combinations are shown in 3GPP TS 23.060 [47].

Implementation

Optional.

10.1.4 Quality of service profile (requested) +CGQREQ

Table 114: +CGQREQ parameter command syntax

Command	Possible Response(s)
+CGQREQ=[<cid>[,<precedence>[,<delay>[,	

<reliability>[,<peak>[,<mean>]]]]]]	
+CGQREQ?	[+CGQREQ: <cid>,<precedence>,<delay>,<reliability>,<peak>,<mean>] [<CR><LF>+CGQREQ: <cid>,<precedence>,<delay>,<reliability>,<peak>,<mean> [...]]
+CGQREQ=?	+CGQREQ: <PDP_type>,(list of supported <precedence>s),(list of supported <delay>s),(list of supported <reliability>s),(list of supported <peak>s),(list of supported <mean>s) [<CR><LF>+CGQREQ: <PDP_type>,(list of supported <precedence>s),(list of supported <delay>s),(list of supported <reliability>s),(list of supported <peak>s),(list of supported <mean>s) [...]]

Description

This command allows the TE to specify a Quality of Service Profile that is used when the MT activates a PDP context.

The set command specifies a profile for the context identified by the (local) context identification parameter, <cid>. Since this is the same parameter that is used in the +CGDCONT and +CGDSCONT commands, the +CGQREQ command is effectively an extension to these commands. The QoS profile consists of a number of parameters, each of which may be set to a separate value.

A special form of the set command, +CGQREQ=<cid> causes the requested profile for context number <cid> to become undefined.

The read command returns the current settings for each defined context.

The test command returns values supported as a compound value. If the MT supports several PDP types, the parameter value ranges for each PDP type are returned on a separate line.

Defined values

<cid>: integer type; specifies a particular PDP context definition (see the +CGDCONT and +CGDSCONT commands).

<PDP_type>: string type; specifies the type of packet data protocol (see the +CGDCONT command).

The following parameters are defined in 3GPP TS 23.107 [46]:

<precedence>: integer type; specifies the precedence class

<delay>: integer type; specifies the delay class

<reliability>: integer type; specifies the reliability class

<peak>: integer type; specifies the peak throughput class

<mean>: integer type; specifies the mean throughput class

If a value is omitted for a particular class then the value is considered to be unspecified.

Implementation

Optional. If the command is not implemented then all the values are considered to be unspecified.

10.1.5 Quality of service profile (minimum acceptable) +CGQMIN

Table 115: +CGQMIN parameter command syntax

Command	Possible Response(s)
+CGQMIN=[<cid>[,<precedence>[,<delay>[,<reliability>[,<peak>[,<mean>]]]]]]	
+CGQMIN?	[+CGQMIN: <cid>,<precedence>,<delay>,<reliability>,<peak>,<mean>] [<CR><LF>+CGQMIN: <cid>,<precedence>,<delay>,<reliability>,<peak>,<mean> [...]]
+CGQMIN=?	+CGQMIN: <PDP_type>,(list of supported <precedence>s),(list of supported <delay>s),(list of supported <reliability>s),(list of supported <peak>s),(list of supported <mean>s) [<CR><LF>+CGQMIN: <PDP_type>,(list of supported <precedence>s),(list of supported <delay>s),(list of supported <reliability>s),(list of supported <peak>s),(list of supported <mean>s) [...]]

Description

This command allows the TE to specify a minimum acceptable profile which is checked by the MT against the negotiated profile when the PDP context is activated.

The set command specifies a profile for the context identified by the (local) context identification parameter, <cid>. Since this is the same parameter that is used in the +CGDCONT and +CGDSCONT commands, the +CGQMIN command is effectively an extension to these commands. The QoS profile consists of a number of parameters, each of which may be set to a separate value.

A special form of the set command, +CGQMIN=<cid> causes the minimum acceptable profile for context number <cid> to become undefined. In this case no check is made against the negotiated profile.

The read command returns the current settings for each defined context.

The test command returns values supported as a compound value. If the MT supports several PDP types, the parameter value ranges for each PDP type are returned on a separate line.

Defined values

<cid>: integer type; specifies a particular PDP context definition (see the +CGDCONT and +CGDSCONT commands).

<PDP_type>: string type; specifies the type of packet data protocol (see the +CGDCONT command).

The following parameters are defined in 3GPP TS 23.107 [46]:

<precedence>: integer type; specifies the precedence class

<delay>: integer type; specifies the delay class

<reliability>: integer type; specifies the reliability class

<peak>: integer type; specifies the peak throughput class

<mean>: integer type; specifies the mean throughput class

If a value is omitted for a particular class then this class is not checked.

Implementation

Optional. If the command is not implemented then no check is made against the negotiated profile.

10.1.6 3G quality of service profile (requested) +CGEQREQ

Table 116: +CGEQREQ parameter command syntax

Command	Possible Response(s)
+CGEQREQ=[<cid>[,<Traffic class>[,<Maximum bitrate UL>[,<Maximum bitrate DL>[,<Guaranteed bitrate UL>[,<Guaranteed bitrate DL>[,<Delivery order>[,<Maximum SDU size>[,<SDU error ratio>[,<Residual bit error ratio>[,<Delivery of erroneous SDUs>[,<Transfer delay>[,<Traffic handling priority>[,<Source statistics descriptor>[,<Signalling indication>]]]]]]]]]]]]]]	
+CGEQREQ?	[+CGEQREQ: <cid>,<Traffic class>,<Maximum bitrate UL>,<Maximum bitrate DL>, <Guaranteed bitrate UL>,<Guaranteed bitrate DL>,<Delivery order>,<Maximum SDU size>,<SDU error ratio>,<Residual bit error ratio>,<Delivery of erroneous SDUs>,<Transfer delay>,<Traffic handling priority>,<Source statistics descriptor>,<Signalling indication>] [<CR><LF>+CGEQREQ: <cid>,<Traffic class>,<Maximum bitrate UL>,<Maximum bitrate DL>,<Guaranteed bitrate UL>,<Guaranteed bitrate DL>,<Delivery order>,<Maximum SDU size>,<SDU error ratio>,<Residual bit error ratio>,<Delivery of erroneous SDUs>,<Transfer delay>,<Traffic handling priority>,<Source Statistics Descriptor>,<Signalling Indication> [...]]
+CGEQREQ=?	+CGEQREQ: <PDP_type>,(list of supported <Traffic class>s),(list of supported <Maximum bitrate UL>s),(list of supported <Maximum bitrate DL>s),(list of supported <Guaranteed bitrate UL>s),(list of supported <Guaranteed bitrate DL>s),(list of supported <Delivery order>s),(list of supported <Maximum SDU size>s),(list of supported <SDU error ratio>s),(list of supported <Residual bit error ratio>s),(list of supported <Delivery of erroneous SDUs>s),(list of supported <Transfer delay>s),(list of supported <Traffic handling priority>s),(list of supported <Source statistics descriptor>s),(list of supported

Command	Possible Response(s)
	<Signalling indication>s) [<CR><LF>+CGEQREQ: <PDP_type>,(list of supported <Traffic class>s),(list of supported <Maximum bitrate UL>s),(list of supported <Maximum bitrate DL>s),(list of supported <Guaranteed bitrate UL>s),(list of supported <Guaranteed bitrate DL>s),(list of supported <Delivery order>s),(list of supported <Maximum SDU size>s),(list of supported <SDU error ratio>s),(list of supported <Residual bit error ratio>s),(list of supported <Delivery of erroneous SDUs>s),(list of supported <Transfer delay>s),(list of supported <Traffic handling priority>s),(list of supported <Source statistics descriptor>s),(list of supported <Signalling indication>s) [...]]

Description

This command allows the TE to specify a UMTS Quality of Service Profile that is used when the MT activates a PDP context.

The set command specifies a profile for the context identified by the (local) context identification parameter, <cid>. The specified profile will be stored in the MT and sent to the network only at activation or MS-initiated modification of the related context. Since this is the same parameter that is used in the +CGDCONT and +CGDSCONT commands, the +CGEQREQ command is effectively an extension to these commands. The QoS profile consists of a number of parameters, each of which may be set to a separate value.

A special form of the set command, +CGEQREQ=<cid> causes the requested profile for context number <cid> to become undefined.

The read command returns the current settings for each defined context.

The test command returns values supported as a compound value. If the MT supports several PDP types, the parameter value ranges for each PDP type are returned on a separate line.

Defined values

<cid>: integer type; specifies a particular PDP context definition (see +CGDCONT and +CGDSCONT commands).

<PDP_type>: string type; specifies the type of packet data protocol (see the +CGDCONT command).

For the following parameters, see also 3GPP TS 23.107 [46].

<Traffic class>: integer type; indicates the type of application for which the UMTS bearer service is optimised (refer 3GPP TS 24.008 [8] subclause 10.5.6.5).

0 conversational

1 streaming

2 interactive

3 background

4 subscribed value

If the Traffic class is specified as conversational or streaming, then the Guaranteed and Maximum bitrate parameters should also be provided.

`<Maximum bitrate UL>`: integer type; indicates the maximum number of kbits/s delivered to UMTS (up-link traffic) at a SAP. As an example a bitrate of 32kbit/s would be specified as '32' (e.g. `AT+CGEQREQ=…,32, …`). This parameter should be provided if the Traffic class is specified as conversational or streaming (refer 3GPP TS 24.008 [8] subclause 10.5.6.5).

`<Maximum bitrate DL>`: integer type; indicates the maximum number of kbits/s delivered by UMTS (down-link traffic) at a SAP. As an example a bitrate of 32kbit/s would be specified as '32' (e.g. `AT+CGEQREQ=…,32, …`). If the parameter is set to '0' the subscribed value will be requested. This parameter should be provided if the Traffic class is specified as conversational or streaming (refer 3GPP TS 24.008 [8] subclause 10.5.6.5).

`<Guaranteed bitrate UL>`: integer type; indicates the guaranteed number of kbits/s delivered to UMTS (up-link traffic) at a SAP (provided that there is data to deliver). As an example a bitrate of 32kbit/s would be specified as '32' (e.g. `AT+CGEQREQ=…,32, …`). If the parameter is set to '0' the subscribed value will be requested. This parameter should be provided if the Traffic class is specified as conversational or streaming (refer 3GPP TS 24.008 [8] subclause 10.5.6.5).

`<Guaranteed bitrate DL>`: integer type; indicates the guaranteed number of kbits/s delivered by UMTS (down-link traffic) at a SAP (provided that there is data to deliver). As an example a bitrate of 32kbit/s would be specified as '32' (e.g. `AT+CGEQREQ=…,32, …`). If the parameter is set to '0' the subscribed value will be requested. This parameter should be provided if the Traffic class is specified as conversational or streaming (refer 3GPP TS 24.008 [8] subclause 10.5.6.5).

`<Delivery order>`: integer type; indicates whether the UMTS bearer shall provide in-sequence SDU delivery or not (refer 3GPP TS 24.008 [8] subclause 10.5.6.5).

0 no

1 yes

2 subscribed value

`<Maximum SDU size>`: integer type; (1,2,3,…) indicates the maximum allowed SDU size in octets. If the parameter is set to '0' the subscribed value will be requested (refer 3GPP TS 24.008 [8] subclause 10.5.6.5).

`<SDU error ratio>`: string type; indicates the target value for the fraction of SDUs lost or detected as erroneous. SDU error ratio is defined only for conforming traffic. The value is specified as 'mEe'. As an example a target SDU error ratio of $5 \cdot 10^{-3}$ would be specified as "5E3" (e.g. `AT+CGEQREQ=…,"5E3",…`). "0E0" means subscribed value (refer 3GPP TS 24.008 [8] subclause 10.5.6.5).

`<Residual bit error ratio>`: string type; indicates the target value for the undetected bit error ratio in the delivered SDUs. If no error detection is requested, Residual bit error ratio indicates the bit error ratio in the delivered SDUs. The value is specified as "mEe". As an example a target residual bit error ratio of $5 \cdot 10^{-3}$ would be specified as "5E3" (e.g. `AT+CGEQREQ=…,"5E3",…`). "0E0" means subscribed value (refer 3GPP TS 24.008 [8] subclause 10.5.6.5).

`<Delivery of erroneous SDUs>`: integer type; indicates whether SDUs detected as erroneous shall be delivered or not (refer 3GPP TS 24.008 [8] subclause 10.5.6.5).

0 no

1 yes

2 no detect

3 subscribed value

`<Transfer delay>`: integer type; (0,1,2,…) indicates the targeted time between request to transfer an SDU at one SAP to its delivery at the other SAP, in milliseconds. If the parameter is set to '0' the subscribed value will be requested (refer 3GPP TS 24.008 [8] subclause 10.5.6.5).

<Traffic handling priority>: integer type; (1,2,3,…) specifies the relative importance for handling of all SDUs belonging to the UMTS bearer compared to the SDUs of other bearers. If the parameter is set to '0' the subscribed value will be requested (refer 3GPP TS 24.008 [8] subclause 10.5.6.5).

<Source Statistics Descriptor>: integer type; specifies characteristics of the source of the submitted SDUs for a PDP context. This parameter should be provided if the Traffic class is specified as conversational or streaming (refer 3GPP TS 24.008 [8] subclause 10.5.6.5).

0 Characteristics of SDUs is unknown

1 Characteristics of SDUs corresponds to a speech source

<Signalling Indication>: integer type; indicates signalling content of submitted SDUs for a PDP context. This parameter should be provided if the Traffic class is specified as interactive (refer 3GPP TS 24.008 [8] subclause 10.5.6.5).

0 PDP context is not optimized for signalling

1 PDP context is optimized for signalling<PDP_type> (see +CGDCONT and +CGDSCONT commands).

If a value is omitted for a particular class then the value is considered to be unspecified.

NOTE: When in dual mode with EPS the MT provides a mapping function to EPS Quality of Service parameter used for an EPS bearer resource activation request.

Implementation

Optional. If the command is not implemented then all the values are considered to be unspecified.

10.1.7 3G quality of service profile (minimum acceptable) +CGEQMIN

Table 117: +CGEQMIN parameter command syntax

Command	Possible Response(s)
+CGEQMIN=[<cid>[,<Traffic class>[,<Maximum bitrate UL>[,<Maximum bitrate DL>[,<Guaranteed bitrate UL>[,<Guaranteed bitrate DL>[,<Delivery order>[,<Maximum SDU size>[,<SDU error ratio>[,<Residual bit error ratio>[,<Delivery of erroneous SDUs>[,<Transfer delay>[,<Traffic handling priority>[,<Source statistics descriptor>[,<Signalling indication>]]]]]]]]]]]]]]]	
+CGEQMIN?	[+CGEQMIN: <cid>,<Traffic class>,<Maximum bitrate UL>,<Maximum bitrate DL>,<Guaranteed bitrate UL>,<Guaranteed bitrate DL>,<Delivery order>,<Maximum SDU size>,<SDU error ratio>,<Residual bit error ratio>,<Delivery of erroneous SDUs>,<Transfer delay>,<Traffic handling priority>,<Source statistics descriptor>,<Signalling indication>] [<CR><LF>+CGEQMIN: <cid>,<Traffic class>,<Maximum bitrate UL>,<Maximum bitrate DL>,<Guaranteed bitrate UL>,<Guaranteed bitrate DL>,<Delivery order>,<Maximum SDU size>,<SDU error ratio>,<Residual bit error ratio>,<Delivery of erroneous SDUs>,<Transfer delay>,<Traffic

Command	Possible Response(s)
	handling priority>,<Source statistics descriptor>,<Signalling indication> [...]]
+CGEQMIN=?	+CGEQMIN: <PDP_type>,(list of supported <Traffic class>s),(list of supported <Maximum bitrate UL>s),(list of supported <Maximum bitrate DL>s),(list of supported <Guaranteed bitrate UL>s),(list of supported <Guaranteed bitrate DL>s),(list of supported <Delivery order>s),(list of supported <Maximum SDU size>s),(list of supported <SDU error ratio>s),(list of supported <Residual bit error ratio>s),(list of supported <Delivery of erroneous SDUs>s),(list of supported <Transfer delay>s),(list of supported <Traffic handling priority>s),(list of supported <Source statistics descriptor>s),(list of supported <Signalling indication>s) [<CR><LF>+CGEQMIN: <PDP_type>,(list of supported <Traffic class>s),(list of supported <Maximum bitrate UL>s),(list of supported <Maximum bitrate DL>s),(list of supported <Guaranteed bitrate UL>s),(list of supported <Guaranteed bitrate DL>s),(list of supported <Delivery order>s),(list of supported <Maximum SDU size>s),(list of supported <SDU error ratio>s),(list of supported <Residual bit error ratio>s),(list of supported <Delivery of erroneous SDUs>s),(list of supported <Transfer delay>s),(list of supported <Traffic handling priority>s),(list of supported <Source statistics descriptor>s),(list of supported <Signalling indication>s) [...]]

Description

This command allows the TE to specify a minimum acceptable profile, which is checked by the MT against the negotiated profile returned in the PDP context establishment and PDP contect modification procedures.

The set command specifies a profile for the context identified by the (local) context identification parameter, <cid>. The specified profile will be stored in the MT and checked against the negotiated profile only at activation or MS-initiated modification of the related context. Since this is the same parameter that is used in the +CGDCONT and +CGDSCONT commands, the +CGEQMIN command is effectively an extension to these commands. The QoS profile consists of a number of parameters, each of which may be set to a separate value.

A special form of the set command, +CGEQMIN=<cid> causes the minimum acceptable profile for context number <cid> to become undefined. In this case no check is made against the negotiated profile.

The read command returns the current settings for each defined context.

The test command returns values supported as a compound value. If the MT supports several PDP types, the parameter value ranges for each PDP type are returned on a separate line.

Defined values

<cid>: integer type; specifies a particular PDP context definition (see +CGDCONT and +CGDSCONT commands).

<PDP_type>: string type; specifies the type of packet data protocol (see the +CGDCONT command).

For the following parameters, see also 3GPP TS 23.107 [46].

<Traffic class>: integer type; indicates the type of application for which the UMTS bearer service is optimised (refer 3GPP TS 24.008 [8] subclause 10.5.6.5).

0 conversational

1 streaming

2 interactive

3 background

<Maximum bitrate UL>: integer type; indicates the maximum number of kbits/s delivered to UMTS (up-link traffic) at a SAP. As an example a bitrate of 32kbit/s would be specified as '32' (e.g. AT+CGEQMIN=…,32, …) (refer 3GPP TS 24.008 [8] subclause 10.5.6.5).

<Maximum bitrate DL>: integer type; indicates the maximum number of kbits/s delivered by UMTS (down-link traffic) at a SAP. As an example a bitrate of 32kbit/s would be specified as '32' (e.g. AT+CGEQMIN=…,32, …) (refer 3GPP TS 24.008 [8] subclause 10.5.6.5).

<Guaranteed bitrate UL>: integer type; indicates the guaranteed number of kbits/s delivered to UMTS (up-link traffic) at a SAP (provided that there is data to deliver). As an example a bitrate of 32kbit/s would be specified as '32' (e.g. AT+CGEQMIN=…,32, …) (refer 3GPP TS 24.008 [8] subclause 10.5.6.5).

<Guaranteed bitrate DL>: integer type; indicates the guaranteed number of kbits/s delivered by UMTS (down-link traffic) at a SAP (provided that there is data to deliver). As an example a bitrate of 32kbit/s would be specified as '32' (e.g. AT+CGEQMIN=…,32, …) (refer 3GPP TS 24.008 [8] subclause 10.5.6.5).

<Delivery order>: integer type; indicates whether the UMTS bearer shall provide in-sequence SDU delivery or not (refer 3GPP TS 24.008 [8] subclause 10.5.6.5).

0 no

1 yes

<Maximum SDU size>: integer type; (1,2,3,…) indicates the maximum allowed SDU size in octets (refer 3GPP TS 24.008 [8] subclause 10.5.6.5).

<SDU error ratio>: string type; indicates the target value for the fraction of SDUs lost or detected as erroneous. SDU error ratio is defined only for conforming traffic. The value is specified as "mEe". As an example a target SDU error ratio of $5 \cdot 10^{-3}$ would be specified as "5E3" (e.g. AT+CGEQMIN=…,"5E3",…) (refer 3GPP TS 24.008 [8] subclause 10.5.6.5).

<Residual bit error ratio>: string type; indicates the target value for the undetected bit error ratio in the delivered SDUs. If no error detection is requested, Residual bit error ratio indicates the bit error ratio in the delivered SDUs. The value is specified as "mEe". As an example a target residual bit error ratio of $5 \cdot 10^{-3}$ would be specified as "5E3" (e.g. AT+CGEQMIN=…,"5E3",…) (refer 3GPP TS 24.008 [8] subclause 10.5.6.5).

<Delivery of erroneous SDUs>: integer type; indicates whether SDUs detected as erroneous shall be delivered or not (refer 3GPP TS 24.008 [8] subclause 10.5.6.5).

0 no

1 yes

2 no detect

`<Transfer delay>`: integer type; (0,1,2,…) indicates the targeted time between request to transfer an SDU at one SAP to its delivery at the other SAP, in milliseconds (refer 3GPP TS 24.008 [8] subclause 10.5.6.5).

`<Traffic handling priority>`: integer type; (1,2,3,…) specifies the relative importance for handling of all SDUs belonging to the UMTS bearer compared to the SDUs of other bearers (refer 3GPP TS 24.008 [8] subclause 10.5.6.5).

`<Source Statistics Descriptor>`: integer type; specifies characteristics of the source of the submitted SDUs for a PDP context. This parameter should be provided if the Traffic class is specified as conversational or streaming (refer 3GPP TS 24.008 [8] subclause 10.5.6.5).

0 Characteristics of SDUs is unknown

1 Characteristics of SDUs corresponds to a speech source

`<Signalling Indication>`: integer type; indicates signalling content of submitted SDUs for a PDP context. This parameter should be provided if the Traffic class is specified as interactive (refer 3GPP TS 24.008 [8] subclause 10.5.6.5).

0 PDP context is not optimized for signalling

1 PDP context is optimized for signalling

If a value is omitted for a particular class then the value is considered to be unspecified.

Implementation

Optional. If the command is not implemented then no check is made against the negotiated profile.

10.1.8 3G quality of service profile (negotiated) +CGEQNEG

Table 118: +CGEQNEG action command syntax

Command	Possible Response(s)
+CGEQNEG[=<cid>[,<cid>[,...]]]	[+CGEQNEG: <cid>,<Traffic class>,<Maximum bitrate UL>,<Maximum bitrate DL>,<Guaranteed bitrate UL>,<Guaranteed bitrate DL>,<Delivery order>,<Maximum SDU size>,<SDU error ratio>,<Residual bit error ratio>,<Delivery of erroneous SDUs>,<Transfer delay>,<Traffic handling priority>] [<CR><LF>+CGEQNEG: <cid>,<Traffic class>,<Maximum bitrate UL>,<Maximum bitrate DL>,<Guaranteed bitrate UL>,<Guaranteed bitrate DL>,<Delivery order>,<Maximum SDU size>,<SDU error ratio>,<Residual bit error ratio>,<Delivery of erroneous SDUs>,<Transfer delay>,<Traffic handling priority> [...]]
+CGEQNEG=?	+CGEQNEG: (list of <cid>s associated with active contexts)
NOTE: The syntax of the AT Set Command is corrected to be according to ITU-T Recommendation V.250 [14]. Older versions of the specification specify incorrect syntax +CGEQNEG=[<cid>[,<cid>[,...]]].	

Description

This command allows the TE to retrieve the negotiated QoS profiles returned in the PDP context establishment procedure.

The execution command returns the negotiated QoS profile for the specified context identifiers, <cid>s. The QoS profile consists of a number of parameters, each of which may have a separate value.

If the parameter <cid> is omitted, the relevant information for all established PDP contexts are returned.

The test command returns a list of <cid>s associated with active contexts.

Defined values

<cid>: integer type; specifies a particular PDP context definition (see +CGDCONT and +CGDSCONT commands).

For the following parameters, see also 3GPP TS 23.107 [46].

<Traffic class>: integer type; indicates the type of application for which the UMTS bearer service is optimised (refer 3GPP TS 24.008 [8] subclause 10.5.6.5).

0 conversational

1 streaming

2 interactive

3 background

`<Maximum bitrate UL>`: integer type; indicates the maximum number of kbits/s delivered to UMTS (up-link traffic) at a SAP. As an example a bitrate of 32kbit/s would be specified as '32' (e.g. `+CGEQNEG:…,32, …`) (refer 3GPP TS 24.008 [8] subclause 10.5.6.5).

`<Maximum bitrate DL>`: integer type; indicates the maximum number of kbits/s delivered by UMTS (down-link traffic) at a SAP As an example a bitrate of 32kbit/s would be specified as '32' (e.g. `+CGEQNEG:…,32, …`) (refer 3GPP TS 24.008 [8] subclause 10.5.6.5).

`<Guaranteed bitrate UL>`: integer type; indicates the guaranteed number of kbits/s delivered to UMTS (up-link traffic) at a SAP (provided that there is data to deliver). As an example a bitrate of 32kbit/s would be specified as '32' (e.g. `+CGEQNEG:…,32, …`) (refer 3GPP TS 24.008 [8] subclause 10.5.6.5).

`<Guaranteed bitrate DL>`: integer type; indicates the guaranteed number of kbits/s delivered by UMTS (down-link traffic) at a SAP (provided that there is data to deliver). As an example a bitrate of 32kbit/s would be specified as '32' (e.g. `+CGEQNEG:…,32, …`) (refer 3GPP TS 24.008 [8] subclause 10.5.6.5).

`<Delivery order>`: integer type; indicates whether the UMTS bearer shall provide in-sequence SDU delivery or not (refer 3GPP TS 24.008 [8] subclause 10.5.6.5).

0 no

1 yes

`<Maximum SDU size>`: integer type; (1,2,3,…) indicates the maximum allowed SDU size in octets (refer 3GPP TS 24.008 [8] subclause 10.5.6.5).

`<SDU error ratio>`: string type; indicates the target value for the fraction of SDUs lost or detected as erroneous. SDU error ratio is defined only for conforming traffic. The value is specified as "mEe". As an example a target SDU error ratio of $5 \cdot 10^{-3}$ would be specified as "5E3" (e.g. `+CGEQNEG:…, "5E3",…`) (refer 3GPP TS 24.008 [8] subclause 10.5.6.5).

`<Residual bit error ratio>`: string type; indicates the target value for the undetected bit error ratio in the delivered SDUs. If no error detection is requested, Residual bit error ratio indicates the bit error ratio in the delivered SDUs. The value is specified as "mEe". As an example a target residual bit error ratio of $5 \cdot 10^{-3}$ would be specified as "5E3" (e.g. `+CGEQNEG:…,"5E3",…`) (refer 3GPP TS 24.008 [8] subclause 10.5.6.5).

`<Delivery of erroneous SDUs>`: integer type; indicates whether SDUs detected as erroneous shall be delivered or not (refer 3GPP TS 24.008 [8] subclause 10.5.6.5).

0 no

1 yes

2 no detect

`<Transfer delay>`: integer type; (0,1,2,…) indicates the targeted time between request to transfer an SDU at one SAP to its delivery at the other SAP, in milliseconds (refer 3GPP TS 24.008 [8] subclause 10.5.6.5).

`<Traffic handling priority>`: integer type; (1,2,3,…) specifies the relative importance for handling of all SDUs belonging to the UMTS bearer compared to the SDUs of other bearers (refer 3GPP TS 24.008 [8] subclause 10.5.6.5).

If a value is omitted for a particular class then the value is considered to be unspecified.

Implementation

Optional.

10.1.9 PS attach or detach +CGATT

Table 119: +CGATT parameter command syntax

Command	Possible Response(s)
+CGATT=<state>	*+CME ERROR: <err>*
+CGATT?	+CGATT: <state>
+CGATT=?	+CGATT: (list of supported <state>s)

Description

The execution command is used to attach the MT to, or detach the MT from, the Packet Domain service. After the command has completed, the MT remains in V.250 command state. If the MT is already in the requested state, the command is ignored and the OK response is returned. If the requested state cannot be achieved, an ERROR or +CME ERROR response is returned. Extended error responses are enabled by the +CMEE command. Refer subclause 9.2 for possible <err> values.

NOTE 1: If the initial PDP context is supported, the context with <cid>=0 is automatically defined at startup, see subclause 10.1.0.

Any active PDP contexts will be automatically deactivated when the attachment state changes to detached.

The read command returns the current Packet Domain service state.

The test command is used for requesting information on the supported Packet Domain service states.

NOTE 2: This command has the characteristics of both the V.250 action and parameter commands. Hence it has the read form in addition to the execution/set and test forms.

Defined Values

<state>: integer type; indicates the state of PS attachment

0 detached

1 attached

Implementation

Optional.

10.1.10 PDP context activate or deactivate +CGACT

Table 120: +CGACT parameter command syntax

Command	Possible Response(s)
+CGACT=[<state>[,<cid>[,<cid>[,...]]]]	*+CME ERROR: <err>*
+CGACT?	[+CGACT: <cid>,<state>] [<CR><LF>+CGACT: <cid>,<state> [...]]
+CGACT=?	+CGACT: (list of supported <state>s)

Description

The execution command is used to activate or deactivate the specified PDP context (s). After the command has completed, the MT remains in V.250 command state. If any PDP context is already in the requested state, the state for that context remains unchanged. If the requested state for any specified context cannot be achieved, an ERROR or +CME

ERROR response is returned. Extended error responses are enabled by the +CMEE command. If the MT is not PS attached when the activation form of the command is executed, the MT first performs a PS attach and then attempts to activate the specified contexts. If the attach fails then the MT responds with ERROR or, if extended error responses are enabled, with the appropriate failure-to-attach error message. Refer subclause 9.2 for possible <err> values.

For EPS, if an attempt is made to disconnect the last PDN connection, then the MT responds with ERROR or, if extended error responses are enabled, a +CME ERROR.

NOTE: If the initial PDP context is supported, the context with <cid>=0 is automatically defined at startup, see subclause 10.1.0.

For EPS, the activation request for an EPS bearer resource will be answered by the network by either an EPS dedicated bearer activation or EPS bearer modification request. The request must be accepted by the MT before the PDP context can be set in to established state.

If no <cid>s are specified the activation form of the command activates all defined contexts.

If no <cid>s are specified the deactivation form of the command deactivates all active contexts.

The read command returns the current activation states for all the defined PDP contexts.

The test command is used for requesting information on the supported PDP context activation states.

NOTE. This command has the characteristics of both the V.250 action and parameter commands. Hence it has the read form in addition to the execution/set and test forms.

Defined Values

<state>: integer type; indicates the state of PDP context activation

0 deactivated

1 activated

<cid>: integer type; specifies a particular PDP context definition (see the +CGDCONT and +CGDSCONT commands).

Implementation

Optional.

10.1.11 PDP context modify +CGCMOD

Table 121: +CGCMOD action command syntax

Command	Possible Response(s)
+CGCMOD[=<cid>[,<cid>[,...]]]	*+CME ERROR: <err>*
+CGCMOD=?	+CGCMOD: (list of <cid>s associated with active contexts)
NOTE: The syntax of the AT Set Command is corrected to be according to ITU-T Recommendation V.250 [14]. Older versions of the specification specify incorrect syntax +CGCMOD=[<cid>[,<cid>[,...]]].	

Description

The execution command is used to modify the specified PDP context (s) with repect to QoS profiles and TFTs. After the command has completed, the MT returns to V.250 online data state. If the requested modification for any specified context cannot be achieved, an ERROR or +CME ERROR response is returned. Extended error responses are enabled by the +CMEE command. Refer subclause 9.2 for possible <err> values.

For EPS, the modification request for an EPS bearer resource will be answered by the network by an EPS bearer modification request. The request must be accepted by the MT before the PDP context is effectively changed.

If no <cid>s are specified the activation form of the command modifies all active contexts.

The test command returns a list of <cid>s associated with active contexts.

Defined Values

<cid>: integer type; specifies a particular PDP context definition (see the +CGDCONT and +CGDSCONT commands).

Implementation

Optional.

10.1.12 Enter data state +CGDATA

Table 122: +CGDATA action command syntax

Command	Possible Response(s)
+CGDATA[=<L2P>[,<cid>[,<cid>[,...]]]]	CONNECT ERROR *+CME ERROR: <err>*
+CGDATA=?	+CGDATA: (list of supported <L2P>s)
NOTE: The syntax of the AT Set Command is corrected to be according to ITU-T Recommendation V.250 [14]. Older versions of the specification specify incorrect syntax +CGDATA=[<L2P>[,<cid>[,<cid>[,...]]]].	

Description

The execution command causes the MT to perform whatever actions are necessary to establish communication between the TE and the network using one or more Packet Domain PDP types. This may include performing a PS attach and one or more PDP context activations. If the <L2P> parameter value is unacceptable to the MT, the MT shall return an ERROR or +CME ERROR response. Refer subclause 9.2 for possible <err> values. Otherwise, the MT issues the intermediate result code CONNECT and enters V.250 online data state.

NOTE: If the initial PDP context is supported, the context with <cid>=0 is automatically defined at startup, see subclause 10.1.0.

Commands following +CGDATA command in the AT command line shall not be processed by the MT.

The detailed behaviour after the online data state has been entered is dependent on the PDP type. It is described briefly in 3GPP TS 27.060 [34] and in more detail in 3GPP TS 29.061 [39] and the specifications for the relevant PDPs. PS attachment and PDP context activation procedures may take place prior to or during the PDP startup if they have not already been performed using the +CGATT and +CGACT commands.

If context activation takes place during the PDP startup, one or more <cid>s may be specified in order to provide the information needed for the context activation request(s).

During each PDP startup procedure the MT may have access to some or all of the following information -

The MT may have a priori knowledge, for example, it may implement only one PDP type.

The command may have provided an <L2P> parameter value.

The TE may provide a PDP type and/or PDP address to the MT during in the PDP startup procedure.

If any of this information is in conflict, the command will fail.

Any PDP type and/or PDP address present in the above information shall be compared with the PDP type and/or PDP address in any context definitions specified in the command in the order in which their <cid>s appear. For a context definition to match:

The PDP type must match exactly.

The PDP addresses are considered to match if they are identical or if either or both addresses are unspecified. For example, a PPP NCP request specifying PDP type = IP and no PDP address would cause the MT to search through the specified context definitions for one with PDP type = IP and any PDP address.

The context shall be activated using the matched value for PDP type and a static PDP address if available, together with the other information found in the PDP context definition. If a static PDP address is not available then a dynamic address is requested.

If no `<cid>` is given or if there is no matching context definition, the MT shall attempt to activate the context with whatever information is available to the MT. The other context parameters shall be set to their default values.

If the activation is successful, data transfer may proceed.

After data transfer is complete, and the layer 2 protocol termination procedure has completed successfully, the V.250 command state is re-entered and the MT returns the final result code `OK`.

In the event of an erroneous termination or a failure to start up, the V.250 command state is re-entered and the MT returns the final result code `NO CARRIER` or, if enabled, `+CME ERROR`. Refer subclause 9.2 for possible `<err>` values. Attach, activate and other errors may be reported.

The test command is used for requesting information on the supported layer 2 protocols.

This command may be used in both normal and modem compatibility modes.

Defined Values

`<L2P>`: string type; indicates the layer 2 protocol to be used between the TE and MT

NULL	none, for PDP type OSP:IHOSS (Obsolete)
PPP	Point-to-point protocol for a PDP such as IP
PAD	character stream for X.25 character (triple X PAD) mode (Obsolete)
X25	X.25 L2 (LAPB) for X.25 packet mode (Obsolete)
M-xxxx	manufacturer-specific protocol (xxxx is an alphanumeric string)

If the value is omitted, the layer 2 protocol is unspecified. Other values are reserved and will result in an `ERROR` response.

`<cid>`: integer type; specifies a particular PDP context definition (see the `+CGDCONT` and `+CGDSCONT` commands).

Implementation

Optional if the `D` (dial) command can be used to specify Packet Domain operation.

10.1.13 Configure local octet stream PAD parameters +CGCLOSP (Obsolete)

10.1.14 Show PDP address(es) +CGPADDR

Table 123: +CGPADDR action command syntax

Command	Possible response(s)
+CGPADDR[=<cid>[,<cid>[,...]]]	[+CGPADDR: <cid>[,<PDP_addr_1>[,<PDP_addr_2>]]] [<CR><LF>+CGPADDR: <cid>,[<PDP_addr_1>[,<PDP_addr_2>]] [...]]
+CGPADDR=?	+CGPADDR: (list of defined <cid>s)
NOTE: The syntax of the AT Set Command is corrected to be according to ITU-T Recommendation V.250 [14]. Older versions of the specification specify incorrect syntax +CGPADDR=[,<cid>[,<cid>[,...]]].	

Description

The execution command returns a list of PDP addresses for the specified context identifiers. If no <cid> is specified, the addresses for all defined contexts are returned.

The test command returns a list of defined <cid>s.

Defined values

<cid>: integer type; specifies a particular PDP context definition (see the +CGDCONT and +CGDSCONT commands).

<PDP_addr_1> and <PDP_addr_2>: each is a string type that identifies the MT in the address space applicable to the PDP. The address may be static or dynamic. For a static address, it will be the one set by the +CGDCONT and +CGDSCONT commands when the context was defined. For a dynamic address it will be the one assigned during the last PDP context activation that used the context definition referred to by <cid>. Both <PDP_addr_1> and <PDP_addr_2>are omitted if none is available. Both <PDP_addr_1> and <PDP_addr_2> are included when both IPv4 and IPv6 addresses are assigned, with <PDP_addr_1> containing the IPv4 address and <PDP_addr_2> containing the IPv6 address.

The string is given as dot-separated numeric (0-255) parameter of the form:
a1.a2.a3.a4 for IPv4 and
a1.a2.a3.a4.a5.a6.a7.a8.a9.a10.a11.a12.a13.a14.a15.a16 for IPv6.

When +CGPIAF is supported, its settings can influence the format of the IPv6 address in parameter <PDP_addr_1> or <PDP_addr_2> returned with the execute form of +CGPADDR.

NOTE: In dual-stack terminals (<PDP_type> IPV4V6), the IPv6 address will be provided in <PDP_addr_2>. For terminals with a single IPv6 stack (<PDP_type> IPV6) or due to backwards compatibility, the IPv6 address can be provided in parameter <PDP_addr_1>.

Implementation

Optional.

10.1.15 Automatic response to a network request for PDP context activation +CGAUTO

Table 124: +CGAUTO parameter command syntax

Command	Possible response(s)
+CGAUTO=[<n>]	*+CME ERROR: <err>*
+CGAUTO?	+CGAUTO: <n>
+CGAUTO=?	+CGAUTO: (list of supported <n>s)

Description

The set command disables or enables an automatic positive or negative response (auto-answer) to the receipt of a NW-initiated Request PDP Context Activation message from the network in UMTS/GPRS and a NW-initiated Request EPS Bearer Activation/ Modification Request messages in EPS. It also provides control over the use of the V.250 basic commands 'S0', 'A' and 'H' for handling network requests for PDP context activation. The setting does not affect the issuing of the unsolicited result code RING or +CRING.

When the +CGAUTO=0 command is received, the MT shall not perform a PS detach if it is attached. Subsequently, when the MT announces a network request for PDP context activation by issuing the unsolicited result code RING or +CRING, the TE may manually accept or reject the request by issuing the +CGANS command or may simply ignore the network request.

When the +CGAUTO=1 command is received, the MT shall attempt to perform a PS attach if it is not already attached. Failure will result in ERROR or, if enabled, +CME ERROR being returned to the TE. Refer subclause 9.2 for possible <err> values. Subsequently, when the MT announces a network request for PDP context activation by issuing the unsolicited result code RING or +CRING to the TE, this is followed by the intermediate result code CONNECT. The MT then enters V.250 online data state and follows the same procedure as it would after having received a +CGANS=1 with no <L2P> or <cid> values specified.

The read command returns the current value of <n>.

The test command returns the values of <n> supported by the MT as a compound value.

Defined values

<n>: integer type

0 turn off automatic response for Packet Domain only

1 turn on automatic response for Packet Domain only

2 modem compatibility mode, Packet Domain only

3 modem compatibility mode, Packet Domain and circuit switched calls

4 turn on automatic negative response for Packet Domain only

For <n> = 0 Packet Domain network requests are manually accepted or rejected by the +CGANS command.

For <n> = 1 Packet Domain network requests are automatically accepted according to the description above.

For <n> = 2, automatic acceptance of Packet Domain network requests is controlled by the 'S0' command. Manual control uses the 'A' and 'H' commands, respectively, to accept and reject Packet Domain requests. (+CGANS may also be used.) Incoming circuit switched calls can be neither manually nor automatically answered.

For <n> = 3, automatic acceptance of both Packet Domain network requests and incoming circuit switched calls is controlled by the 'S0' command. Manual control uses the 'A' and 'H' commands, respectively, to accept and reject Packet Domain requests. (+CGANS may also be used.) Circuit switched calls are handled as described elsewhere in this specification.

For <n> = 4, Packet Domain network requests are automatically rejected.

Implementation

Optional. If not implemented, the MT shall behave according to the case of <n> = 3.

10.1.16 Manual response to a network request for PDP context activation +CGANS

Table 125: +CGANS action command syntax

Command	Possible response(s)
+CGANS[=<response>,[<L2P>,[<cid>]]]	*+CME ERROR: <err>*
+CGANS=?	+CGANS: (list of supported <response>s),(list of supported <L2P>s)
NOTE: The syntax of the AT Set Command is corrected to be according to ITU-T Recommendation V.250 [14]. Older versions of the specification specify incorrect syntax +CGANS=[<response>,[<L2P>,[<cid>]]]	

Description

The execution command requests the MT to respond to a network request for Packet Domain PDP context activation which has been signalled to the TE by the RING, +CRING or +CGEV unsolicited result code. The <response> parameter allows the TE to accept or reject the request.

If <response> is 0, the request is rejected and the MT returns OK to the TE.

If <response> is 1, the following procedure is followed by the MT.

Commands following the +CGANS command in the AT command line shall not be processed by the MT.

If the <L2P> parameter value is unacceptable to the MT, the MT shall return an ERROR or +CME ERROR response. Refer subclause 9.2 for possible <err> values. Otherwise, the MT issues the intermediate result code CONNECT and enters V.250 online data state.

The detailed behaviour after the online data state has been entered is dependent on the PDP type. It is described briefly in 3GPP TS 27.060 [34] and in more detail in 3GPP TS 29.061 [39] and the specifications for the relevant PDPs. PDP context activation procedures shall take place prior to or during the PDP startup.

One or more <cid>s may be specified in order to provide the values needed for the context activation request.

During the PDP startup procedure the MT has the PDP type and the PDP address provided by the network in the Request PDP Context Activation message. The MT may also have some or all of the following information:

The MT may have a priori knowledge, for example, it may implement only one PDP type.

The command may have provided an <L2P> parameter value.

The TE may provide one or both of PDP type and PDP address to the MT in the PDP startup.

If any of this information is in conflict, the command will fail.

If one or more <cid> is given then an attempt shall be made to identify an appropriate context definition by matching the PDP type and PDP address in the network request with the PDP type and PDP address in each of the specified context definitions (in the order in which their <cid>s appear in the command) as follows:

The PDP type must match exactly.

The PDP addresses are considered to match if they are identical or if the address in the context definition is unspecified.

The context shall be activated using the values for PDP type and PDP address provided by the network, together with the other information found in the PDP context definition. An APN may or may not re required, depending on the application.

If no <cid> is given or if there is no matching context definition, the MT will attempt to activate the context using the values for PDP type and PDP address provided by the network, together with any other relevant information known to the MT. The other context parameters will be set to their default values.

If the activation is successful, data transfer may proceed.

After data transfer is complete, and the layer 2 protocol termination procedure has completed successfully, the V.250 command state is re-entered and the MT returns the final result code OK

In the event of an erroneous termination or a failure to startup, the V.250 command state is re-entered and the MT returns the final result code NO CARRIER or, if enabled, +CME ERROR. Refer subclause 9.2 for possible <err> values. Attach, activate and other errors may be reported. It is also an error to issue the +CGANS command when there is no outstanding network request.

NOTE: This is not the same as if the MT issues a +CGDATA (or +CGACT) command after receiving a +CRING unsolicited result code. A +CGDATA (or +CGACT) does not command the MT to acknowledge the network request but rather to make a new request for context activation. The network request would be ignored.

The test command returns the values of <response> and <L2P> supported by the MT as compound values.

This command may be used in both normal and modem compatibility modes.

Defined values

<response>: integer type; specifies how the request should be responded to.

0 reject the request

1 accept and request that the PDP context be activated

If <response> is omitted it is assumed to be 0.

<L2P>: string type; indicates the layer 2 protocol to be used (see +CGDATA command).

<cid>: integer type; specifies a particular PDP context definition (see the +CGDCONT and +CGDSCONT commands).

Implementation

Optional.

10.1.17 GPRS mobile station class +CGCLASS

Table 126: +CGCLASS parameter command syntax

Command	Possible Response(s)
+CGCLASS=[<class>]	*+CME ERROR: <err>*
+CGCLASS?	+CGCLASS: <class>
+CGCLASS=?	+CGCLASS: (list of supported <class>s)

Description

The set command is used to set the MT to operate according to the specified mode of operation, see 3GPP TS 23.060 [47]. If the requested mode of operation is not supported, an ERROR or +CME ERROR response is returned. Extended error responses are enabled by the +CMEE command. Refer subclause 9.2 for possible <err> values.

The read command returns the mode of operation set by the TE, independent of the current serving cell capability and independent of the current serving cell Access Technology. If no value has been set by the TE previously, the return value shall be the highest mode of operation that can be supported by the MT.

The test command is used for requesting information on the supported MT mode of operation.

Defined Values

<class>: string type; indicates the mode of operation

A Class-A mode of operation (A/Gb mode), or CS/PS mode of operation (Iu mode) (highest mode of operation)

B Class-B mode of operation (A/Gb mode), or CS/PS mode of operation (Iu mode)

CG Class-C mode of operation in PS only mode (A/Gb mode), or PS mode of operation (Iu mode)

CC Class-C mode of operation in CS only mode (A/Gb mode), or CS (Iu mode) (lowest mode of operation)

NOTE: <class> A means that the MT would operate simultaneous PS and CS service
<class> B means that the MT would operate PS and CS services but not simultaneously in A/Gb mode
<class> CG means that the MT would only operate PS services
<class> CC means that the MT would only operate CS services

If the MT is attached to the PS domain when the set command is issued with a <class> = CC specified, a PS detach shall be performed by the MT.

Implementation

Optional.

10.1.18 Configure local triple-X PAD parameters +CGCLPAD (GPRS only) (Obsolete)

10.1.19 Packet domain event reporting +CGEREP

Table 127: +CGEREP parameter command syntax

Command	Possible response(s)
+CGEREP=[<mode>[,<bfr>]]	*+CME ERROR: <err>*
+CGEREP?	+CGEREP: <mode>,<bfr>
+CGEREP=?	+CGEREP: (list of supported <mode>s),(list of supported <bfr>s)

Description

Set command enables or disables sending of unsolicited result codes, +CGEV: XXX from MT to TE in the case of certain events occurring in the Packet Domain MT or the network. <mode> controls the processing of unsolicited result codes specified within this command. <bfr> controls the effect on buffered codes when <mode> 1 or 2 is entered. If a setting is not supported by the MT, ERROR or +CME ERROR: is returned. Refer subclause 9.2 for possible <err> values.

Read command returns the current mode and buffer settings

Test command returns the modes and buffer settings supported by the MT as compound values.

Defined values

<mode>: integer type

0 buffer unsolicited result codes in the MT; if MT result code buffer is full, the oldest ones can be discarded. No codes are forwarded to the TE.

1 discard unsolicited result codes when MT-TE link is reserved (e.g. in on-line data mode); otherwise forward them directly to the TE

2 buffer unsolicited result codes in the MT when MT-TE link is reserved (e.g. in on-line data mode) and flush them to the TE when MT-TE link becomes available; otherwise forward them directly to the TE

<bfr>: integer type

0 MT buffer of unsolicited result codes defined within this command is cleared when <mode> 1 or 2 is entered

1 MT buffer of unsolicited result codes defined within this command is flushed to the TE when <mode> 1 or 2 is entered (OK response shall be given before flushing the codes)

Defined events

The events are valid for GPRS/UMTS and LTE unless explicitly mentioned.

For network attachment, the following unsolicited result codes and the corresponding events are defined:

+CGEV: NW DETACH

The network has forced a PS detach. This implies that all active contexts have been deactivated. These are not reported separately.

+CGEV: ME DETACH

The mobile termination has forced a PS detach. This implies that all active contexts have been deactivated. These are not reported separately.

For MT class, the following unsolicited result codes and the corresponding events are defined:

+CGEV: NW CLASS <class>

The network has forced a change of MT class. The highest available class is reported (see +CGCLASS). The format of the parameter <class> is found in command +CGCLASS.

+CGEV: ME CLASS <class>

The mobile termination has forced a change of MT class. The highest available class is reported (see +CGCLASS). The format of the parameter <class> is found in command +CGCLASS.

For PDP context activation, the following unsolicited result codes and the corresponding events are defined:

+CGEV: NW PDN ACT <cid>

The network has activated a context. The context represents a Primary PDP context in GSM/UMTS. The <cid> for this context is provided to the TE. The format of the parameter <cid> is found in command +CGDCONT.

NOTE 1: This event is not applicable for EPS.

+CGEV: ME PDN ACT <cid>[,<reason>[,<cid_other>]]

The mobile termination has activated a context. The context represents a PDN connection in LTE or a Primary PDP context in GSM/UMTS. The <cid> for this context is provided to the TE. This event is sent either in result of explicit context activation request (+CGACT), or in result of implicit context activation request associated to attach request (+CGATT=1). The format of the parameters <cid> and <cid_other> are found in command +CGDCONT.

<reason>: integer type; indicates the reason why the context activation request for PDP type IPv4v6 was not granted. This parameter is only included if the requested PDP type associated with <cid> is IPv4v6, and the PDP type assigned by the network for <cid> is either IPv4 or IPv6.

0 IPv4 only allowed

1 IPv6 only allowed

2 single address bearers only allowed.

3 single address bearers only allowed and MT initiated context activation for a second address type bearer was not successful.

<cid_other>: integer type; indicates the context identifier allocated by MT for an MT initiated context of a second address type. MT shall only include this parameter if <reason> parameter indicates single address bearers only allowed, and MT supports MT initiated context activation of a second address type without additional commands from TE, and MT has activated the PDN connection or PDP context associated with <cid_other>.

NOTE 1A: For legacy TEs supporting MT initiated context activation without TE requests, there is also a subsequent event +CGEV: ME PDN ACT <cid_other> returned to TE.

+CGEV: NW ACT <p_cid>, <cid>, <event_type>

The network has activated a context. The <cid> for this context is provided to the TE in addition to the associated primary <p_cid>. The format of the parameters <p_cid> and <cid> are found in command +CGDSCONT.

<event_type>: integer type; indicates whether this is an informational event or whether the TE has to acknowledge it.

0 Informational event

1 Information request: Acknowledgement required. The acknowledgement can be accept or reject, see +CGANS.

+CGEV: ME ACT <p_cid>, <cid>, <event_type>

The network has responded to an ME initiated context activation. The <cid> for this context is provided to the TE in addition to the associated primary <p_cid>. The format of the parameters <p_cid> and <cid> are found in command +CGDSCONT. The format of the parameter <event_type> is defined above.

For PDP context deactivation, the following unsolicited result codes and the corresponding events are defined:

+CGEV: NW DEACT <PDP_type>, <PDP_addr>, [<cid>]

The network has forced a context deactivation. The <cid> that was used to activate the context is provided if known to the MT. The format of the parameters <PDP_type>, <PDP_addr> and <cid> are found in command +CGDCONT.

+CGEV: ME DEACT <PDP_type>, <PDP_addr>, [<cid>]

The mobile termination has forced a context deactivation. The <cid> that was used to activate the context is provided if known to the MT. The format of the parameters <PDP_type>, <PDP_addr> and <cid> are found in command +CGDCONT.

+CGEV: NW PDN DEACT <cid>

The network has deactivated a context. The context represents a PDN connection in LTE or a Primary PDP context in GSM/UMTS. The associated <cid> for this context is provided to the TE. The format of the parameter <cid> is found in command +CGDCONT.

NOTE 2: Occurrence of this event replaces usage of the event +CGEV: NW DEACT <PDP_type>, <PDP_addr>, [<cid>].

`+CGEV: ME PDN DEACT <cid>`

The mobile termination has deactivated a context. The context represents a PDN connection in LTE or a Primary PDP context in GSM/UMTS. The `<cid>` for this context is provided to the TE. The format of the parameter `<cid>` is found in command `+CGDCONT`.

NOTE 3: Occurrence of this event replaces usage of the event
`+CGEV: ME DEACT <PDP_type>, <PDP_addr>, [<cid>]`.

`+CGEV: NW DEACT <p_cid>, <cid>, <event_type>`

The network has deactivated a context. The `<cid>` for this context is provided to the TE in addition to the associated primary `<p_cid>`. The format of the parameters `<p_cid>` and `<cid>` are found in command `+CGDSCONT`. The format of the parameter `<event_type>` is defined above.

NOTE 4: Occurrence of this event replaces usage of the event
`+CGEV: NW DEACT <PDP_type>, <PDP_addr>, [<cid>]`.

`+CGEV: ME DEACT <p_cid>, <cid>, <event_type>`

The network has responded to an ME initiated context deactivation request. The associated `<cid>` is provided to the TE in addition to the associated primary `<p_cid>`. The format of the parameters `<p_cid>` and `<cid>` are found in command `+CGDSCONT`. The format of the parameter `<event_type>` is defined above.

NOTE 5: Occurrence of this event replaces usage of the event
`+CGEV: ME DEACT <PDP_type>, <PDP_addr>, [<cid>]`.

For PDP context modification, the following unsolicited result codes and the corresponding events are defined:

`+CGEV: NW MODIFY <cid>, <change_reason>, <event_type>`

The network has modifieda context. The associated `<cid>` is provided to the TE in addition to the `<change_reason>` and `<event_type>`. The format of the parameter `<cid>` is found in command `+CGDCONT` or `+CGDSCONT`. The format of the parameters `<change_reason>` and `<event_type>` are defined above.

`<change_reason>`: integer type; indicates what kind of change occurred.

1 TFT only changed

2 Qos only changed

3 Both TFT and QoS changed

`+CGEV: ME MODIFY <cid>, <change_reason>, <event_type>`

The mobile termination has modified a context. The associated `<cid>` is provided to the TE in addition to the `<change_reason>` and `<event_type>`. The format of the parameter `<cid>` is found in command `+CGDCONT` or `+CGDSCONT`. The format of the parameters `<change_reason>` and `<event_type>` are defined above.

For other PDP context handling, the following unsolicited result codes and the corresponding events are defined:

`+CGEV: REJECT <PDP_type>, <PDP_addr>`

A network request for context activation occurred when the MT was unable to report it to the TE with a `+CRING` unsolicited result code and was automatically rejected. The format of the parameters `<PDP_type>` and `<PDP_addr>` are found in command `+CGDCONT`.

NOTE 6: This event is not applicable for EPS.

`+CGEV: NW REACT <PDP_type>, <PDP_addr>, [<cid>]`

The network has requested a context reactivation. The `<cid>` that was used to reactivate the context is provided if known to the MT. The format of the parameters `<PDP_type>`, `<PDP_addr>` and `<cid>` are found in command `+CGDCONT`.

NOTE 7: This event is not applicable for EPS.

Implementation

Optional.

10.1.20 GPRS network registration status +CGREG

Table 128: +CGREG parameter command syntax

Command	Possible response(s)
`+CGREG=[<n>]`	`+CME ERROR: <err>`
`+CGREG?`	`+CGREG: <n>,<stat>[,[<lac>],[<ci>],[<AcT>],[<rac>][,<cause_type>,<reject_cause>]]`
`+CGREG=?`	`+CGREG: (`list of supported `<n>`s`)`

Description

The set command controls the presentation of an unsolicited result code `+CGREG: <stat>` when `<n>`=1 and there is a change in the MT's GPRS network registration status in GERAN/UTRAN, or unsolicited result code `+CGREG: <stat>[,[<lac>],[<ci>],[<AcT>],[<rac>]]` when `<n>`=2 and there is a change of the network cell in GERAN/UTRAN. The parameters `<AcT>`, `<lac>`, `<rac>` and `<ci>` are sent only if available. The value `<n>`=3 further extends the unsolicited result code with `[,<cause_type>,<reject_cause>]`, when available, when the value of `<stat>` changes. Refer subclause 9.2 for possible `<err>` values.

NOTE 1. If the GPRS MT also supports circuit mode services in GERAN/UTRAN and/or EPS services in E-UTRAN, the `+CREG` command and `+CREG`: result codes and/or the `+CEREG` command and `+CEREG:` result codes apply to the registration status and location information for those services.

The read command returns the status of result code presentation and an integer `<stat>` which shows whether the network has currently indicated the registration of the MT. Location information elements `<lac>`, `<ci>`, `<AcT>` and `<rac>`, if available, are returned only when `<n>`=2 and MT is registered in the network. The parameters `[,<cause_type>,<reject_cause>]`, if available, are returned when `<n>`=3.

Test command returns values supported as a compound value.

Defined values

`<n>`: integer type

0 disable network registration unsolicited result code

1 enable network registration unsolicited result code `+CGREG: <stat>`

2 enable network registration and location information unsolicited result code `+CGREG: <stat>[,<[lac>,]<[ci>],[<AcT>],[<rac>]]`

3 enable network registration, location information and GMM cause value information unsolicited result code `+CGREG: <stat>[,[<lac>],[<ci>],[<AcT>],[<rac>][,<cause_type>,<reject_cause>]]`

`<stat>`: integer type; indicates the GPRS registration status

0 not registered, MT is not currently searching an operator to register to

1 registered, home network

2 not registered, but MT is currently trying to attach or searching an operator to register to

3 registration denied

4 unknown (e.g. out of GERAN/UTRAN coverage)

5 registered, roaming

6 registered for "SMS only", home network (not applicable)

7 registered for "SMS only", roaming (not applicable)

8 attached for emergency bearer services only (see NOTE 2) (applicable only when `<AcT>` indicates 2,4,5,6)

9 registered for "CSFB not preferred", home network (not applicable)

10 registered for "CSFB not preferred", roaming (not applicable)

NOTE 2: 3GPP TS 24.008 [8] and 3GPP TS 24.301 [83] specify the condition when the MS is considered as attached for emergency bearer services.

`<lac>`: string type; two byte location area code in hexadecimal format (e.g. "00C3" equals 195 in decimal)

`<ci>`: string type; four byte GERAN/UTRAN cell ID in hexadecimal format

`<AcT>`: integer type; indicates the access technology of the serving cell

0 GSM

1 GSM Compact

2 UTRAN

3 GSM w/EGPRS (see NOTE 3)

4 UTRAN w/HSDPA (see NOTE 4)

5 UTRAN w/HSUPA (see NOTE 4)

6 UTRAN w/HSDPA and HSUPA (see NOTE 4)

7 E-UTRAN (not applicable)

NOTE 3: 3GPP TS 44.060 [71] specifies the System Information messages which give the information about whether the serving cell supports EGPRS.

NOTE 4: 3GPP TS 25.331 [74] specifies the System Information blocks which give the information about whether the serving cell supports HSDPA or HSUPA.

`<rac>`: string type; one byte routing area code in hexadecimal format

`<cause_type>`: integer type; indicates the type of `<reject_cause>`.

0 Indicates that <reject_cause> contains a GMM cause value, see 3GPP TS 24.008 [8] Annex G.

1 Indicates that <reject_cause> contains a manufacturer-specific cause.

`<reject_cause>`: integer type; contains the cause of the failed registration. The value is of type as defined by `<cause_type>`.

Implementation

Optional.

10.1.21 Select service for MO SMS messages +CGSMS

Table 129: +CGSMS parameter command syntax

Command	Possible Response(s)
+CGSMS=[<service>]	
+CGSMS?	+CGSMS: <service>
+CGSMS=?	+CGSMS: (list of currently available <service>s)

Description

The set command is used to specify the service or service preference that the MT will use to send MO SMS messages.

The read command returns the currently selected service or service preference.

The test command is used for requesting information on the currently available services and service preferences.

Defined Values

<service>: integer type; indicates the service or service preference to be used

0 Packet Domain

1 circuit switched

2 Packet Domain preferred (use circuit switched if GPRS not available)

3 circuit switched preferred (use Packet Domain if circuit switched not available)

Implementation

Optional.

10.1.22 EPS network registration status +CEREG

Table 10.1.22-1: +CEREG parameter command syntax

Command	Possible response(s)
+CEREG=[<n>]	*+CME ERROR: <err>*
+CEREG?	+CEREG: <n>,<stat>[,[<tac>],[<ci>],[<AcT>[,<cause_type>,<reject_cause>]]]
+CEREG=?	+CEREG: (list of supported <n>s)

Description

The set command controls the presentation of an unsolicited result code +CEREG: <stat> when <n>=1 and there is a change in the MT's EPS network registration status in E-UTRAN, or unsolicited result code +CEREG: <stat>[,[<tac>],[<ci>],[<AcT>]] when <n>=2 and there is a change of the network cell in E-UTRAN. The parameters <AcT>, <tac> and <ci> are sent only if available.The value <n>=3 further extends the unsolicited result code with [,<cause_type>,<reject_cause>], when available, when the value of <stat> changes. Refer subclause 9.2 for possible <err> values.

NOTE 1: If the EPS MT in GERAN/UTRAN/E-UTRAN also supports circuit mode services and/or GPRS services, the +CREG command and +CREG: result codes and/or the +CGREG command and +CGREG: result codes apply to the registration status and location information for those services.

The read command returns the status of result code presentation and an integer <stat> which shows whether the network has currently indicated the registration of the MT. Location information elements <tac>, <ci> and <AcT>,

if available, are returned only when <n>=2 and MT is registered in the network. The parameters [,<cause_type>,<reject_cause>], if available, are returned when <n>=3.

Test command returns values supported as a compound value.

Defined values

<n>: integer type

0 disable network registration unsolicited result code

1 enable network registration unsolicited result code +CEREG: <stat>

2 enable network registration and location information unsolicited result code
+CEREG: <stat>[,[<tac>],[<ci>],[<AcT>]]

3 enable network registration, location information and EMM cause value information unsolicited result code
+CEREG: <stat>[,[<tac>],[<ci>],[<AcT>][,<cause_type>,<reject_cause>]]

<stat>: integer type; indicates the EPS registration status

0 not registered, MT is not currently searching an operator to register to

1 registered, home network

2 not registered, but MT is currently trying to attach or searching an operator to register to

3 registration denied

4 unknown (e.g. out of E-UTRAN coverage)

5 registered, roaming

6 registered for "SMS only", home network (not applicable)

7 registered for "SMS only", roaming (not applicable)

8 attached for emergency bearer services only (See NOTE 2)

9 registered for "CSFB not preferred", home network (not applicable)

10 registered for "CSFB not preferred", roaming (not applicable)

NOTE 2: 3GPP TS 24.008 [8] and 3GPP TS 24.301 [83] specify the condition when the MS is considered as attached for emergency bearer services.

<tac>: string type; two byte tracking area code in hexadecimal format (e.g. "00C3" equals 195 in decimal)

<ci>: string type; four byte E-UTRAN cell ID in hexadecimal format

<AcT>: integer type; indicates the access technology of the serving cell

0 GSM (not applicable)

1 GSM Compact (not applicable)

2 UTRAN (not applicable)

3 GSM w/EGPRS (see NOTE 3) (not applicable)

4 UTRAN w/HSDPA (see NOTE 4) (not applicable)

5 UTRAN w/HSUPA (see NOTE 4) (not applicable)

6 UTRAN w/HSDPA and HSUPA (see NOTE 4) (not applicable)

7 E-UTRAN

NOTE 3: 3GPP TS 44.060 [71] specifies the System Information messages which give the information about whether the serving cell supports EGPRS.

NOTE 4: 3GPP TS 25.331 [74] specifies the System Information blocks which give the information about whether the serving cell supports HSDPA or HSUPA.

<cause_type>: integer type; indicates the type of <reject_cause>.

0 Indicates that <reject_cause> contains an EMM cause value, see 3GPP TS 24.301 [83] Annex A.

1 Indicates that <reject_cause> contains a manufacturer-specific cause.

<reject_cause>: integer type; contains the cause of the failed registration. The value is of type as defined by <cause_type>.

Implementation

Optional.

10.1.23 PDP context read dynamic parameters +CGCONTRDP

Table 10.1.23-1: +CGCONTRDP action command syntax

Command	Possible response(s)
+CGCONTRDP[=<cid>]	[+CGCONTRDP: <cid>,<bearer_id>,<apn>[,<local_addr and subnet_mask>[,<gw_addr>[,<DNS_prim_addr>[,<DNS_sec_addr>[,<P-CSCF_prim_addr>[,<P-CSCF_sec_addr>[,<IM_CN_Signalling_Flag>[,<LIPA_indication>]]]]]]]]] [<CR><LF>+CGCONTRDP: <cid>,<bearer_id>,<apn>[,<local_addr and subnet_mask>[,<gw_addr>[,<DNS_prim_addr>[,<DNS_sec_addr>[,<P-CSCF_prim_addr>[,<P-CSCF_sec_addr>[,<IM_CN_Signalling_Flag>[,<LIPA_indication>]]]]]]]]] [...]]
+CGCONTRDP=?	+CGCONTRDP: (list of <cid>s associated with active contexts)
NOTE: The syntax of the AT Set Command is corrected to be according to ITU-T Recommendation V.250 [14]. Older versions of the specification specify incorrect syntax +CGCONTRDP=[<cid>]	

Description

The execution command returns the relevant information <bearer_id>, <apn>, <local_addr and subnet_mask>, <gw_addr>, <DNS_prim_addr>, <DNS_sec_addr>, <P-CSCF_prim_addr>, <P-CSCF_sec_addr>, <IM_CN_Signalling_Flag> and <LIPA_indication> for an active non secondary PDP context with the context identifier <cid>.

If the MT indicates more than two IP addresses of P-CSCF servers or more than two IP addresses of DNS servers, multiple lines of information per <cid> will be returned.

If the MT has dual stack capabilities, at least one pair of lines with information is returned per <cid>. First one line with the IPv4 parameters followed by one line with the IPv6 parameters. If this MT with dual stack capabilities indicates more than two IP addresses of P-CSCF servers or more than two IP addresses of DNS servers, multiple of such pairs of lines are returned.

NOTE: If the MT doesn't have all the IP addresses to be included in a line, e.g. in case the UE received four IP addresses of DNS servers and two IP addresses of P-CSCF servers, the parameter value representing an IP address that can not be populated is set to an empty string or an absent string.

If the parameter <cid> is omitted, the relevant information for all active non secondary PDP contexts is returned.

The test command returns a list of <cid>s associated with active non secondary contexts.

Defined values

<cid>: integer type; specifies a particular non secondary PDP context definition. The parameter is local to the TE-MT interface and is used in other PDP context-related commands (see the +CGDCONT and +CGDSCONT commands).

<bearer_id>: integer type; identifies the bearer, i.e. the EPS bearer in EPS and the NSAPI in UMTS/GPRS.

<apn>: string type; a logical name that was used to select the GGSN or the external packet data network.

<local_addr and subnet_mask>: string type; shows the IP address and subnet mask of the MT. The string is given as dot-separated numeric (0-255) parameters on the form:

"a1.a2.a3.a4.m1.m2.m3.m4" for IPv4 or
"a1.a2.a3.a4.a5.a6.a7.a8.a9.a10.a11.a12.a13.a14.a15.a16.m1.m2.m3.m4.m5.m6.m7.m8.m9.m10.m11.m12.m13.m14.m15.m16" for IPv6.

When +CGPIAF is supported, its settings can influence the format of this parameter returned with the execute form of +CGCONTRDP.

<gw_addr>: string type; shows the Gateway Address of the MT. The string is given as dot-separated numeric (0-255) parameters.

When +CGPIAF is supported, its settings can influence the format of this parameter returned with the execute form of +CGCONTRDP.

<DNS_prim_addr>: string type; shows the IP address of the primary DNS server.

When +CGPIAF is supported, its settings can influence the format of this parameter returned with the execute form of +CGCONTRDP.

<DNS_sec_addr>: string type; shows the IP address of the secondary DNS server.

When +CGPIAF is supported, its settings can influence the format of this parameter returned with the execute form of +CGCONTRDP.

<P_CSCF_prim_addr>: string type; shows the IP address of the primary P-CSCF server.

When +CGPIAF is supported, its settings can influence the format of this parameter returned with the execute form of +CGCONTRDP.

<P_CSCF_sec_addr>: string type; shows the IP address of the secondary P-CSCF server.

When +CGPIAF is supported, its settings can influence the format of this parameter returned with the execute form of +CGCONTRDP.

<IM_CN_Signalling_Flag>: integer type; shows whether the PDP context is for IM CN subsystem-related signalling only or not.

0 PDP context is not for IM CN subsystem-related signalling only

1 PDP context is for IM CN subsystem-related signalling only

<LIPA_indication>: integer type; indicates that the PDP context provides connectivity using a LIPA PDN connection. This parameter cannot be set by the TE.

0 indication not received that the PDP context provides connectivity using a LIPA PDN connection

1 indication received that the PDP context provides connectivity using a LIPA PDN connection

Implementation

Optional.

10.1.24 Secondary PDP context read dynamic parameters +CGSCONTRDP

Table 10.1.24-1: +CGSCONTRDP action command syntax

Command	Possible response(s)
+CGSCONTRDP[=<cid>]	[+CGSCONTRDP: <cid>,<p_cid>,<bearer_id>[,<IM_CN_Signalling_Flag>]] [<CR><LF>+CGSCONTRDP: <cid>,<p_cid>,<bearer_id>[,<IM_CN_Signalling_Flag>] [...]]
+CGSCONTRDP=?	+CGSCONTRDP: (list of <cid>s associated with active contexts)
NOTE: The syntax of the AT Set Command is corrected to be according to ITU-T Recommendation V.250 [14]. Older versions of the specification specify incorrect syntax +CGSCONTRDP=[<cid>]	

Description

The execution command returns <p_cid>, <bearer_id> and <IM_CN_Signalling_Flag> for an active secondary PDP context with the context identifier <cid>.

If the parameter <cid> is omitted, the <cid>, <p_cid>, <bearer_id> and <IM_CN_Signalling_Flag> are returned for all active secondary PDP contexts.

In EPS, the Traffic Flow parameters are returned.

NOTE: Parameters for UE initiated and network initiated PDP contexts are returned.

The test command returns a list of <cid>s associated with active secondary PDP contexts.

Defined values

<cid>: integer type; specifies a particular active secondary PDP context or Traffic Flows definition. The parameter is local to the TE-MT interface and is used in other PDP context-related commands (see the +CGDCONT and +CGDSCONT commands).

<p_cid>: integer type; specifies a particular PDP context definition or default EPS context Identifier which has been specified by use of the +CGDCONT command. The parameter is local to the TE-MT interface (see the +CGDSCONT command).

<bearer_id>: integer type; identifies the bearer, EPS Bearer in EPS and NSAPI in UMTS/GPRS.

<IM_CN_Signalling_Flag>: integer type; shows whether the PDP context is for IM CN subsystem-related signalling only or not.

0 PDP context is not for IM CN subsystem-related signalling only

1 PDP context is for IM CN subsystem-related signalling only

Implementation

Optional.

10.1.25 Traffic flow template read dynamic parameters +CGTFTRDP

Table 10.1.25-1: +CGTFTRDP action command syntax

Command	Possible Response(s)
+CGTFTRDP[=<cid>]	[+CGTFTRDP: <cid>,<packet filter identifier>,<evaluation precedence index>,<remote address and subnet mask>,<protocol number (ipv4) / next header (ipv6)>,<local port range>,<remote port range>,<ipsec security parameter index (spi)>,<type of service (tos) (ipv4) and mask / traffic class (ipv6) and mask>,<flow label (ipv6)>,<direction>,<NW packet filter Identifier>] [<CR><LF>+CGTFTRDP: <cid>,<packet filter identifier>,<evaluation precedence index>,<remote address and subnet mask>,<protocol number (ipv4) / next header (ipv6)>,<local port range>, <remote port range>,<ipsec security parameter index (spi)>,<type of service (tos) (ipv4) and mask / traffic class (ipv6) and mask>,<flow label (ipv6)>,<direction>,<NW packet filter Identifier> [...]]
+CGTFTRDP=?	+CGTFTRDP: (list of <cid>s associated with active contexts)
NOTE: The syntax of the AT Set Command is corrected to be according to ITU-T Recommendation V.250 [14]. Older versions of the specification specify incorrect syntax +CGTFTRDP=[<cid>]	

Description

The execution command returns the relevant information about Traffic Flow Template for an active secondary or non secondary PDP context specified by <cid> together with the additional network assigned values when established by the network. If the parameter <cid> is omitted, the Traffic Flow Templates for all active secondary and non secondary PDP contexts are returned.

Parameters of both network and MT/TA initiated PDP contexts will be returned.

The test command returns a list of <cid>s associated with active secondary and non secondary contexts.

Defined values

<cid>: integer type; Specifies a particular secondary or non secondary PDP context definition or Traffic Flows definition (see +CGDCONT and +CGDSCONT commands).

For the following parameters, see also 3GPP TS 23.060 [47]

<packet filter identifier>: integer type. The value range is from 1 to 16.

<evaluation precedence index>: integer type. The value range is from 0 to 255.

<remote address and subnet mask>: string type. The string is given as dot-separated numeric (0-255) parameters on the form:
"a1.a2.a3.a4.m1.m2.m3.m4" for IPv4 or
"a1.a2.a3.a4.a5.a6.a7.a8.a9.a10.a11.a12.a13.a14.a15.a16.m1.m2.m3.m4.m5.m6.m7.m8.m9.m10.m11.m12.m13.m14.m15.m16" for IPv6.

When +CGPIAF is supported, its settings can influence the format of this parameter returned with the execute form of +CGTFTRDP.

<protocol number (ipv4) / next header (ipv6)>: integer type. The value range is from 0 to 255.

<local port range>: string type. The string is given as dot-separated numeric (0-65535) parameters on the form "f.t".

<remote port range>: string type. The string is given as dot-separated numeric (0-65535) parameters on the form "f.t".

<ipsec security parameter index (spi)>: numeric value in hexadecimal format. The value range is from 00000000 to FFFFFFFF.

<type of service (tos) (ipv4) and mask / traffic class (ipv6) and mask>: string type. The string is given as dot-separated numeric (0-255) parameters on the form "t.m".

<flow label (ipv6)>: numeric value in hexadecimal format. The value range is from 00000 to FFFFF. Valid for IPv6 only.

<direction> integer type. Specifies the transmission direction in which the Packet Filter shall be applied.

0 Pre Release 7 TFT Filter (see 3GPP TS 24.008 [8], table 10.5.162)

1 Uplink

2 Downlink

3 Bidirectional (Used for Uplink and Downlink)

<NW packet filter Identifier> integer type. The value range is from 1 to 16. In EPS the value is assigned by the network when established

NOTE: Some of the above listed attributes can coexist in a Packet Filter while others mutually exclude each other. The possible combinations are shown in 3GPP TS 23.060 [47].

Implementation

Optional.

10.1.26 Define EPS quality of service +CGEQOS

Table 10.1.26-1: +CGEQOS parameter command syntax

Command	Possible Response(s)
+CGEQOS=[<cid>[,<QCI>[,<DL_GBR>,<UL_GBR>[,<DL_MBR>,<UL_MBR]]]]	*+CME ERROR: <err>*
+CGEQOS?	[+CGEQOS: <cid>,<QCI>,[<DL_GBR>,<UL_GBR>],[<DL_MBR>,<UL_MBR>]] [<CR><LF>+CGEQOS: <cid>,<QCI>,[<DL_GBR>,<UL_GBR>],[<DL_MBR>,<UL_MBR>] [...]]
+CGEQOS=?	+CGEQOS: (range of supported <cid>s),(list of supported <QCI>s),(list of supported <DL_GBR>s),(list of supported <UL_GBR>s),(list of supported <DL_MBR>s),(list of supported <UL_MBR>s)

Description

The set command allows the TE to specify the EPS Quality of Service parameters <cid>, <QCI>, [<DL_GBR> and <UL_GBR>] and [<DL_MBR> and <UL_MBR>] for a PDP context or Traffic Flows (see 3GPP TS 24.301 [83] and

3GPP TS 23.203 [85]). When in UMTS/GPRS the MT applies a mapping function to UTMS/GPRS Quality of Service. Refer subclause 9.2 for possible <err> values.

A special form of the set command, +CGEQOS= <cid> causes the values for context number <cid> to become undefined.

The read command returns the current settings for each defined QoS.

The test command returns the ranges of the supported parameters.

Defined values

<cid>: integer type; specifies a particular EPS Traffic Flows definition in EPS and a PDP Context definition in UMTS/GPRS (see the +CGDCONT and +CGDSCONT commands).

<QCI>: integer type; specifies a class of EPS QoS (see 3GPP TS 24.301 [83]).

0	QCI is selected by network
[1 – 4]	value range for guaranteed bit rate Traffic Flows
[5 – 9]	value range for non-guarenteed bit rate Traffic Flows
[128 – 254]	value range for Operator-specific QCIs

<DL_GBR>: integer type; indicates DL GBR in case of GBR QCI. The value is in kbit/s. This parameter is omitted for a non-GBR QCI (see 3GPP TS 24.301 [83]).

<UL_GBR>: integer type; indicates UL GBR in case of GBR QCI. The value is in kbit/s. This parameter is omitted for a non-GBR QCI (see 3GPP TS 24.301 [83]).

<DL_MBR>: integer type; indicates DL MBR in case of GBR QCI. The value is in kbit/s. This parameter is omitted for a non-GBR QCI (see 3GPP TS 24.301 [83]).

<UL_MBR>: integer type; indicates UL MBR in case of GBR QCI. The value is in kbit/s. This parameter is omitted for a non-GBR QCI (see 3GPP TS 24.301 [83]).

Implementation

Optional.

10.1.27 EPS quality of service read dynamic parameters +CGEQOSRDP

Table 10.1.27-1: +CGEQOSRDP action command syntax

Command	Possible Response(s)
+CGEQOSRDP[=<cid>]	[+CGEQOSRDP: <cid>,<QCI>,[<DL_GBR>,<UL_GBR>],[<DL_MBR>,<UL_MBR>][,<DL_AMBR>,<UL_AMBR>]] [<CR><LF>+CGEQOSRDP: <cid>,<QCI>,[<DL_GBR>,<UL_GBR>],[<DL_MBR>,<UL_MBR>][,<DL_AMBR>,<UL_AMBR>] [...]]
+CGEQOSRDP=?	+CGEQOSRDP: (list of <cid>s associated with active contexts)
NOTE: The syntax of the AT Set Command is corrected to be according to ITU-T Recommendation V.250 [14]. Older versions of the specification specify incorrect syntax +CGEQOSRDP=[<cid>]	

Description

The execution command returns the Quality of Service parameters <QCI>, [<DL_GBR> and <UL_GBR>] and [<DL_MBR> and <UL_MBR>] of the active secondary or non secondary PDP context associated to the provided context identifier <cid>.

If the parameter <cid> is omitted, the Quality of Service parameters for all secondary and non secondary active PDP contexts are returned.

The test command returns a list of <cid>s associated with secondary or non secondary active PDP contexts.

Parameters of both network and MT/TA initiated PDP contexts will be returned.

Defined values

<cid>: integer type; specifies a particular Traffic Flows definition in EPS and a PDP Context definition in UMTS/GPRS (see the +CGDCONT and +CGDSCONT commands).

<QCI>: integer type; specifies a class of EPS QoS (see 3GPP TS 24.301 [83]).

0	QCI is selected by network
[1 – 4]	value range for guranteed bit rate Traffic Flows
[5 – 9]	value range for non-guarenteed bit rate Traffic Flows
[128 – 254]	value range for Operator-specific QCIs

<DL_GBR>: integer type; indicates DL GBR in case of GBR QCI. The value is in kbit/s. This parameter is omitted for a non-GBR QCI (see 3GPP TS 24.301 [83]).

<UL_GBR>: integer type; indicates UL GBR in case of GBR QCI. The value is in kbit/s. This parameter is omitted for a non-GBR QCI (see 3GPP TS 24.301 [83]).

<DL_MBR>: integer type; indicates DL MBR in case of GBR QCI. The value is in kbit/s. This parameter is omitted for a non-GBR QCI (see 3GPP TS 24.301 [83]).

<UL_MBR>: integer type; indicates UL MBR in case of GBR QCI. The value is in kbit/s. This parameter is omitted for a non-GBR QCI (see 3GPP TS 24.301 [83]).

<DL_AMBR>: integer type; indicates DL APN aggregate MBR (see 3GPP TS 24.301 [83]). The value is in kbit/s.

<UL_AMBR>: integer type; indicates UL APN aggregate MBR (see 3GPP TS 24.301 [83]). The value is in kbit/s.

NOTE: If multiple lines in a response belong to the same PDN connection they contain the same <DL_AMBR> <UL_AMBR> values.

Implementation

Optional.

10.1.28 UE modes of operation for EPS +CEMODE

Table 10.1.28-1: +CEMODE parameter command syntax

Command	Possible Response(s)
+CEMODE=[<mode>]	*+CME ERROR: <err>*
+CEMODE?	+CEMODE: <mode>
+CEMODE=?	+CEMODE: (list of supported <mode>s)

Description

The set command is used to set the MT to operate according to the specified mode of operation for EPS, see 3GPP TS 24.301 [83]. If the requested mode of operation is not supported, an ERROR or +CME ERROR response is returned. Extended error responses are enabled by the +CMEE command. Refer subclause 9.2 for possible <err> values.

The read command returns the mode of operation set by the TE, independent of the current serving cell capability and independent of the current serving cell Access Technology.

The test command is used for requesting information on the supported MT mode of operation.

Defined Values

<mode>: integer type; indicates the mode of operation

0 PS mode 2 of operation

1 CS/PS mode 1 of operation

2 CS/PS mode 2 of operation

3 PS mode 1 of operation

NOTE: the definition for UE modes of operation can be found in 3GPP TS 24.301 [83]

Implementation

Optional.

10.1.29 Delete non-active PDP contexts +CGDEL

Table 10.1.29-1: +CGDEL action command syntax

Command	Possible Response(s)
+CGDEL[=<cid>]	[+CGDEL: <cid>[,<cid>[,...]]] *+CME ERROR: <err>*
+CGDEL=?	

Description

The execution command +CGDEL=<cid> removes the indicated PDP context and removes all associated data related to the indicated PDP contexts that are not activated. The AT command will not delete or remove information for activated PDP contexts. The removed PDP context is listed by the +CGDEL: <cid> intermediate result code. If the initial PDP context is supported (see subclause 10.1.0), +CGDEL=0 will return ERROR and the context will not be removed.

If <cid> points to a primary PDP context, the PDP context will be deleted together with all linked secondary PDP contexts if none of the PDP contexts are activated.

If <cid> points to a secondary PDP context, the PDP context will be deleted if it is not activated.

A special form of the command can be given as +CGDEL (with the =<cid> omitted). In this form, all primary PDP contexts that are not activated or have any activated secondary PDP contexts will be removed and all secondary PDP contexts that are not activated will be removed. The associated data of all the deleted PDP contexts will be removed, and the removed PDP context are listed by the +CGDEL: <cid>[,<cid>[,...]] intermediate result code. Activated PDP contexts will not cause this form of the command to return ERROR or +CME ERROR. Refer subclause 9.2 for possible <err> values.

If the initial PDP context is supported (see subclause 10.1.0), +CGDEL (with the =<cid> omitted) will not cause the initial PDP context to be removed or cause +CGDEL to return ERROR.

NOTE: +CGDEL will remove associated PDP context data that can be set by the AT commands +CGDCONT, +CGDSCONT, +CGTFT, +CGEQREQ, +CGEQMIN and +CGEQOS.

For an attempt to delete PDP context(s) which would violate these rules, a +CME ERROR response is returned. Refer subclause 9.2 for possible <err> values.

Defined values

<cid>: integer type; specifies a particular PDP context definition (see the +CGDCONT and +CGDSCONT commands).

Implementation

Optional.

10.1.30 Signalling connection status +CSCON

Table 10.1.30-1: +CSCON parameter command syntax

Command	Possible response(s)
+CSCON=[<n>]	*+CME ERROR: <err>*
+CSCON?	+CSCON: <n>,<mode>[,<state>] *+CME ERROR: <err>*
+CSCON=?	+CSCON: (list of supported <n>s)

Description

The set command controls the presentation of an unsolicited result code +CSCON. If <n>=1, +CSCON: <mode> is sent from the MT when the connection mode of the MT is changed. If <n>=2 and there is a state within the current mode, +CSCON: <mode>[,<state>] is sent from the MT. If setting fails, an MT error, +CME ERROR: <err> is returned. Refer subclause 9.2 for possible <err> values.

When the MT is in UTRAN or E-UTRAN, the mode of the MT refers to idle when no PS signalling connection and to connected mode when a PS signalling connection between UE and network is setup. When the UE is in GERAN, the mode refers to idle when the MT is in either the IDLE state or the STANDBY state and to connected mode when the MT is in READY state.

The <state> value indicates the state of the MT when the MT is in UTRAN connected mode.

The read command returns the status of result code presentation and an integer <mode> which shows whether the MT is currently in idle mode or connected mode. State information <state> is returned only when <n>=2.

Test command returns supported values as compound value.

Defined values

<n>: integer type

0 disable unsolicited result code

1 enable unsolicited result code +CSCON: <mode>

2 enable unsolicited result code +CSCON: <mode>[,<state>]

<mode>: integer type; indicates the signalling connection status

0 idle

1 connected

<state>: integer type; indicates the RRC state information if the MT is in connected Mode while in UTRAN.

0 UTRAN URA_PCH state

1 UTRAN Cell_PCH state

2 UTRAN Cell_FACH state

3 UTRAN Cell_DCH state

Implementation

Optional.

10.1.31 Define PDP context authentication parameters +CGAUTH

Table 10.1.31-1: +CGAUTH parameter command syntax

Command	Possible response(s)
+CGAUTH=<cid>[,<auth_prot>[,<userid>[,<password>]]]	*+CME ERROR: <err>*
+CGAUTH?	[+CGAUTH: <cid>,<auth_prot>,<userid>,<password>] [<CR><LF>+CGAUTH: <cid>,<auth_prot>,<userid>,<password> [...]]
+CGAUTH=?	+CGAUTH: (range of supported <cid>s),(list of supported <auth_prot>s),(range of supported <userid>s),(range of supported <password>s)

Description

Set command allows the TE to specify authentication parameters for a PDP context identified by the (local) context identification parameter <cid> used during the PDP context activation and the PDP context modification procedures. Since the <cid> is the same parameter that is used in the +CGDCONT and +CGDSCONT commands, +CGAUTH is effectively as an extension to these commands. Refer subclause 9.2 for possible <err> values.

The read command returns the current settings for each defined context.

The test command returns values supported as a compound value.

Defined values

<cid>: integer type. Specifies a particular PDP context definition (see the +CGDCONT and +CGDSCONT commands).

<auth_prot>: integer type. Authentication protocol used for this PDP context.

0 None. Used to indicate that no authentication protocol is used for this PDP context. Username and password are removed if previously specified.

1 PAP

2 CHAP

<userid>: String type. User name for access to the IP network.

<password>: String type. Password for access to the IP network.

Implementation

Optional.

10.1.32 Initial PDP context activation +CIPCA

Table 10.1.32-1: +CIPCA parameter command syntax

Command	Possible response(s)
+CIPCA=[<n>]	
+CIPCA?	+CIPCA: <n>
+CIPCA=?	+CIPCA: (list of supported <n>s)

Description

The set command controls whether an initial PDP context (see subclause 10.1.0) shall be established automatically following an attach procedure when the UE is attached to GERAN or UTRAN RATs. For <n>≠0, deactivating the last (active) PDP context can lead to a (re)establishment of the initial PDP context. Changing setting of <n> from 0 to 1 will cause an immediate attempt to (re)establish the initial PDP context if no PDP context is active. Changing <n> from 0 to 2 will if not roaming cause an immediate attempt to (re)establish the initial PDP context if no other PDP context is active. Changing <n> will never cause a PDP context deactivation.

NOTE 1: This command does not affect connectivity behavior in E-UTRAN, which mandates the UE to establish a PDP context upon attach.

NOTE 2: For this command, the term roaming corresponds to being registered to a VPLMN which is not equivalent to HPLMN or EHPLMN.

The read command returns the current setting of the command.

The test command returns values supported as a compound value.

Defined values

<n>: integer type. Activation of PDP context upon attach.

0 Do not activate

1 Always activate

2 Activate when not roaming

Implementation

Optional.

10.1.33 No more PS data +CNMPSD

Table 10.1.33-1: +CNMPSD action command syntax

Command	Possible Response(s)
+CNMPSD	
+CNMPSD=?	

Description

This command indicates that no application on the MT is expected to exchange data. Upon receiving this command, the final result code OK is returned.

When in UTRAN, if further conditions defined in 3GPP TS 25.331 [74] are met, this can cause transmission of a SIGNALLING CONNECTION RELEASE INDICATION message with the cause "UE Requested PS Data session end".

When in E-UTRAN, if further conditions defined in 3GPP TS 36.331 [86] are met, this can cause transmission of a UEAssistanceInformation message with powerPrefIndication set to "lowPowerConsumption" to the network.

NOTE: See subclause 10.1.38 for a command applicable to an MT using E-UTRAN, where the MT has a preference for a configuration that is not optimized for power saving.

This command may be used in both normal and modem compatibility modes.

Implementation

Optional.

10.1.34 UE's usage setting for EPS +CEUS

Table 10.1.34-1: +CEUS parameter command syntax

Command	Possible Response(s)
`+CEUS=[<setting>]`	
`+CEUS?`	`+CEUS: <setting>`
`+CEUS=?`	`+CEUS: (`list of supported `<setting>`s`)`

Description

The set command is used to set the MT to operate according to the specified UE's usage setting for EPS, see 3GPP TS 24.301 [83].

The read command returns the usage setting set by the TE.

The test command is used for requesting information on the supported MT setting(s).

Defined Values

`<setting>`: integer type; indicates the usage setting of the UE. The default value is manufacturer specific.

0 voice centric

1 data centric

NOTE: The definition for usage settings of the UE can be found in 3GPP TS 24.301 [83].

Implementation

Optional.

10.1.35 UE's Voice Domain Preference E-UTRAN +CEVDP

Table 10.1.35-1: +CEVDP parameter command syntax

Command	Possible Response(s)
`+CEVDP=[<setting>]`	
`+CEVDP?`	`+CEVDP: <setting>`
`+CEVDP=?`	`+CEVDP: (`list of supported `<setting>`s`)`

Description

The set command is used to set the MT to operate according to the specified voice domain preference for E-UTRAN.

The read command returns the setting, independent of the current serving cell capability and independent of the current serving cell's access technology.

Test command returns supported values.

Defined Values

<setting>: integer type; indicates the voice domain preference of the UE. The default value is manufacturer specific.

1 CS Voice only

2 CS Voice preferred, IMS PS Voice as secondary

3 IMS PS Voice preferred, CS Voice as secondary

4 IMS PS Voice only

NOTE: The definition for the UE's voice domain preference for E-UTRAN can be found in 3GPP TS 24.167 [102], subclause 5.27.

Implementation

Optional.

10.1.36 UE's Voice Domain Preference UTRAN +CVDP

Table 10.1.36-1: +CVDP parameter command syntax

Command	Possible Response(s)
+CVDP=[<setting>]	
+CVDP?	+CVDP: <setting>
+CVDP=?	+CVDP: (list of supported <setting>s)

Description

The set command is used to set the MT to operate according to the specified voice domain preference for UTRAN.

The read command returns the setting, independent of the current serving cell capability and independent of the current serving cell's access technology.

Test command returns supported values.

Defined Values

<setting>: integer type; indicates the voice domain preference of the UE. The default value is manufacturer specific.

1 CS Voice only

2 CS Voice preferred, IMS PS Voice as secondary

3 IMS PS Voice preferred, CS Voice as secondary

NOTE: The definition for the UE's voice domain preference for UTRAN can be found in 3GPP TS 24.167 [102], subclause 5.30.

Implementation

Optional.

10.1.37 UE's Mobility Management IMS Voice Termination +CMMIVT

Table 10.1.QT3-1: +CMMIVT parameter command syntax

Command	Possible Response(s)
+CMMIVT=[<setting>]	
+CMMIVT?	+CMMIVT: <setting>
+CMMIVT=?	+CMMIVT: (list of supported <setting>s)

Description

The set command is used to set the MT to perfom additional procedures as specified in 3GPP TS 24.008 [8] and 3GPP TS 24.301 [83] to support terminating access domain selection by the network.

The read command returns the setting, independent of the current serving cell capability and independent of the current serving cell's access technology.

Test command returns supported values.

Defined Values

<setting>: integer type; indicates the mobility management IMS voice termination preference of the UE. The default value is manufacturer specific.

1 Mobility Management for IMS Voice Termination disabled

2 Mobility Management for IMS Voice Termination enabled

NOTE: The definition of the UE's mobility management IMS voice termination values can be found in 3GPP TS 24.167 [102], subclause 5.31.

Implementation

Optional.

10.1.38 Power Preference Indication for EPS +CEPPI

Table 10.1.38-1: +CEPPI action command syntax

Command	Possible Response(s)
+CEPPI=<power preference>	
+CEPPI=?	+CEPPI: (list of supported <power preference>s)

Description

This command indicates whether the MT prefers a configuration primarily optimised for power saving or not. Upon receiving this command, the final result code OK is returned.

When in E-UTRAN, if further conditions defined in 3GPP TS 36.331 [86] are met, this can cause transmission of a UEAssistanceInformation message with powerPrefIndication set to <power preference> to the network.

This command may be used in both normal and modem compatibility modes.

Defined Values

<power preference>: integer type; indicates the power consumption preference of the MT.

0 normal

1 low power consumption

Implementation

Optional.

10.2 Modem compatibility commands

10.2.0 General

This subclause describes how existing AT commands, designed for use with a modem, may be used to control a Packet Domain MT. This is to provide backwards compatibility with existing communications software. For new applications it is recommended that the Packet Domain-specific commands, described in previous subclauses, be used.

10.2.1 MT originated PDP context activation

10.2.1.0 General

In this mode of operation, the MT behaves like an originating modem and accepts the normal V.250 commands associated with placing and clearing a call. If Packet Domain-specific configuration commands are required, they may be sent to the MT as part of the modem initialization commands.

10.2.1.1 Request packet domain service 'D'

Table 130: D command syntax

Command	Possible Response(s)
D*<GPRS_SC>[*[<called_address>][*[<L2P>][*[<cid>[,<cid>[,...]]]]]]#	CONNECT ERROR

Description

This command causes the MT to perform whatever actions are necessary to establish communication between the TE and the external PDN.

The V.250 'D' (Dial) command causes the MT to enter the V.250 online data state and, with the TE, to start the specified layer 2 protocol. The MT shall return CONNECT to confirm acceptance of the command prior to entering the V.250 online data state. No further commands may follow on the AT command line.

The detailed behaviour after the online data state has been entered is dependent on the PDP type. It is described briefly in clause 9 (for IP) of 3GPP TS 27.060 [34]. PS attachment and PDP context activation procedures may take place prior to or during the PDP startup if they have not already been performed using the +CGATT and +CGACT commands.

When the layer 2 protocol has terminated, either as a result of an orderly shut down of the PDP or an error, the MT shall enter V.250 command state and return the NO CARRIER final result code.

If <called address> is supported and provided, the MT shall automatically set up a virtual call to the specified address after the PDP context has been activated.

If <L2P> and <cid> are supported, their usage shall be the same as in the +CGDATA command. The +CGDCONT, +CGQREQ, etc. commands may be used in the modem initialization AT command string to set values for for PDP type, APN, QoS etc..

If <L2P> is not supported or is supported but omitted, the MT shall use a layer 2 protocol appropriate to the PDP type.

If <cid> is not supported or is supported but omitted, the MT shall attempt to activate the context using:

(a) any information provided by the TE during the PDP startup procedure, e.g. the TE may provide a PDP type and/or PDP address to the MT;

(b) a priori knowledge, e.g. the MT may implement only one PDP type; or

(c) using the 'Empty PDP type' (3GPP TS 24.008 [8]). (No PDP address or APN shall be sent in this case and only one PDP context subscription record shall be present in the HLR for this subscriber.)

This command may be used in both normal and modem compatibility modes.

NOTE: The dial string conforms to the syntax specified in 3GPP TS 22.030 [19].

Defined Values

<GPRS_SC>: (GPRS Service Code) a digit string (value 99) which identifies a request to use the Packet Domain service

<called_address>: a string that identifies the called party in the address space applicable to the PDP. For communications software that does not support arbitrary characters in the dial string, a numeric equivalent may be used. Also, the character comma ',' may be used as a substitute for the character period '.'.

<L2P>: a string which indicates the layer 2 protocol to be used (see +CGDATA command). For communications software that does not support arbitrary characters in the dial string, the following numeric equivalents shall be used:

0 NULL (Obsolete)

1 PPP

2 PAD (Obsolete)

3 X25 (Obsolete)

9yyyy M-xxxx

Other values are reserved and will result in an ERROR response

<cid>: a digit string which specifies a particular PDP context definition (see the +CGDCONT and +CGDSCONT commands).

Implementation

Optional if the +CGDATA command is supported. If the D command is provided, then support for <called_address>, <L2P> and <cid> are optional. If they are not supported but values are provided by the TE, the values shall be ignored and this shall not constitute an error.

10.2.1.2 Request packet domain IP service 'D'

Table 131: D command syntax

Command	Possible Response(s)
D*<GPRS_SC_IP>[*<cid>[,<cid>[,...]]]#	CONNECT ERROR

Description

This command causes the MT to perform whatever actions are necessary to establish communication between the TE and the external PDN.

The V.250 'D' (Dial) command causes the MT to enter the V.250 online data state and, with the TE, to start the specified layer 2 protocol. The MT shall return CONNECT to confirm acceptance of the command prior to entering the V.250 online data state. No further commands may follow on the AT command line.

The detailed behaviour after the online data state has been entered is described briefly in clause 9, for IP, of 3GPP TS 27.060 [34]. GPRS attachment and PDP context activation procedures may take place prior to or during the PDP startup if they have not already been performed using the +CGATT and +CGACT commands.

When the layer 2 protocol has terminated, either as a result of an orderly shut down of the PDP or an error, the MT shall enter V.250 command state and return the NO CARRIER final result code.

If <cid> is supported, its usage shall be the same as in the +CGDATA command. The +CGDCONT, +CGQREQ, etc. commands may be used in the modem initialization AT command string to set values for for PDP type, APN, QoS etc.

If <cid> is not supported or is supported but omitted, the MT shall attempt to activate the context using:

(a) any information provided by the TE during the PDP startup procedure, e.g. the TE may provide a PDP type and/or PDP address to the MT;

(b) a priori knowledge, e.g. the MT may implement only one PDP type; or

(c) using the 'Empty PDP type' (3GPP TS 24.008 [8]). (No PDP address or APN shall be sent in this case and only one PDP context subscription record shall be present in the HLR for this subscriber.)

This command may be used in both normal and modem compatibility modes.

NOTE. The dial string conforms to the syntax specified in 3GPP TS 22.030 [19].

Defined Values

<GPRS_SC_IP>: (GPRS Service Code for IP) a digit string (value 98) which identifies a request to use the GPRS with IP (PDP types IP and PPP)

<cid>: a digit string which specifies a particular PDP context definition (see +CGDCONT command).

Implementation

Optional if the +CGDATA command is supported. If the D command is provided, then support for <cid> is optional. If it is not supported but a value is provided by the TE, the value shall be ignored and this shall not constitute an error.

10.2.2 Network requested PDP context activation

10.2.2.0 General

In this mode of operation, the MT behaves like an answering modem and accepts the normal V.250 commands associated with answering a call. If Packet Domain-specific configuration commands are required, they may be sent to the MT as part of the modem initialization commands.

The +CGAUTO command is used to select modem compatibility mode.

10.2.2.1 Automatic response to a network request for PDP context activation 'S0'

The V.250 'S0=n' (Automatic answer) command may be used to turn off (n=0) and on (n>0) the automatic response to a network request for a PDP context activation.

When the 'S0=n' (n>0) command is received, the MT shall attempt to perform a PS attach if it is not already attached. Failure will result in ERROR being returned to the TE. Subsequently, the MT will announce a network request for PDP context activation by issuing the unsolicited result code RING to the TE, followed by the intermediate result code CONNECT. The MT then enters V.250 online data state and follows the same procedure as it would after having received a +CGANS=1 with no <L2P> or <cid> values specified.

NOTE: The 'S0=n' (n=0) command does not perform an automatic PS detach.

Implementation

Optional.

10.2.2.2 Manual acceptance of a network request for PDP context activation 'A'

The V.250 'A' (Answer) command may be used to accept a network request for a PDP context activation announced by the unsolicited result code `RING`. The MT responds with `CONNECT`, enters V.250 online data state and follows the same procedure as it would after having received a `+CGANS=1` with no `<L2P>` or `<cid>` values specified. It is an error to issue the 'A' command when there is no outstanding network request.

Implementation

Optional.

10.2.2.3 Manual rejection of a network request for PDP context activation 'H'

The V.250 'H' or 'H0' (On-hook) command may be used to reject a network request for PDP context activation announced by the unsolicited result code `RING`. The MT responds with `OK`. It is an error to issue the 'H' command when there is no outstanding network request.

NOTE: This is an extension to the usage of the 'H' command that is described in ITU-T Recommendation V.250 [14].

Implementation

Optional.

11 Commands for VGCS and VBS

11.0 General

This clause defines commands that a TE may use to control a VGCS or VBS supporting MT. The requirements for the VGCS and VBS are included in the following specifications:

- Voice Group Call service (VGCS): 3GPP TS 42.068 [55], 3GPP TS 43.068 [49] and 3GPP TS 44.068 [52];
- Voice Broadcast Service (VBS): 3GPP TS 42.069 [56], 3GPP TS 43.069 [50] and 3GPP TS 44.069 [53].

It is anticipated that VGCS or VBS supporting MTs will vary widely in functionality.

A comprehensive set of VGCS and VBS-specific commands is defined in subclause 11.1 to provide the flexibility needed by the more complex MT. The commands use the extended information and error message capabilities described in this specification.

For the simplest MTs, and for backwards compatibility with existing communications software, it is possible to control access to the VGCS and VBS using existing modem-compatible commands. A special dial-string syntax is defined for use with the D command. This "modem compatible" mode of operation is described in subclause 11.2.

11.1 Commands specific to MTs supporting the VGCS and VBS

11.1.1 Accept an incoming voice group or voice broadcast call +CAJOIN

Table 132: +CAJOIN action command syntax

Command	Possible Response(s)
`+CAJOIN=<service>,<GId>,<GCA>`	*`+CME ERROR: <err>`*
`+CAJOIN=?`	

Description

The execute command accepts an incoming or ongoing voice group or voice broadcast call.

See command +CALCC to get a list of current voice group or voice broadcast calls.

Defined Values

<GId>: a digit string that specifies the group identification for the incoming voice group or voice broadcast call.

<GCA>: a digit string that specifies the group call area identification for the incoming voice group or voice broadcast call.

<service> (tele-service):

17 voice group call

18 voice broadcast call

Implementation

Mandatory for a MT supporting AT commands only and VGCS or VBS is implemented.

11.1.2 Reject an incoming voice group or voice broadcast call +CAREJ

Table 133: +CAREJ action command syntax

Command	Possible Response(s)
+CAREJ=<service>,<GId>,<GCA>	*+CME ERROR: <err>*
+CAREJ=?	

Description

The execute command rejects an incoming voice group or voice broadcast call indicated by RING or +CRING, the command is applicable as long as the indication is pending.

If the call is once rejected the RING or +CRING indication is not repeated to TE although the call is still running and notifications for the call are received.

See command +CALCC to get a list of current voice group or voice broadcast calls.

Defined Values

<GId>: a digit string that specifies the group identification for the incoming voice group or voice broadcast call.

<GCA>: a digit string that specifies the group call area identification for the incoming voice group or voice broadcast call.

<service> (tele-service):

17 voice group call

18 voice broadcast call

Implementation

Mandatory for a MT supporting AT commands only and VGCS or VBS is implemented.

11.1.3 Leave an ongoing voice group or voice broadcast call +CAHLD

Table 134: +CAHLD action command syntax

Command	Possible Response(s)
+CAHLD	*+CME ERROR: <err>*

+CAHLD=?	

Description

The execute command forces the MT to leave the active voice group or voice broadcast call without terminating it. The command is only applicable if the MT is in group receive mode. The MT returns to idle mode.

Implementation

Mandatory for a MT supporting AT commands only and VGCS or VBS is implemented.

11.1.4 Talker access for voice group call +CAPTT

Table 135: +CAPTT parameter command syntax

Command	Possible Response(s)
+CAPTT=[<mode>[,<time>]]	*+CME ERROR: <err>*
+CAPTT?	+CAPTT: <mode> *+CME ERROR: <err>*
+CAPTT=?	+CAPTT: (list of supported <mode>s),(list of supported <time>s)

Description

The execute command emulates the Push To Talk function for VGCS talker access.
If the parameter <mode> is set to value "0" i.e. "RELEASED" the PTT key is assumed to be released immediately. If the parameter <mode> is set to value "1" i.e. "PUSHED" the PTT key is assumed to be pushed immediately for the period of <time> in seconds. If the command execution is repeated before the <time> expires the PTT timer will be loaded with the new <time> value and the PTT key remains "PUSHED" for the period of new <time> in seconds.
If the parameter <mode> is set to value "2" i.e. "PUSHED" the PTT key is assumed to be pushed immediately for an infinite period of time and can be released by <mode> value 0. For <mode>=0 if the parameter <time> is issued it is ignored.

If the PTT timer expires after <time> seconds during <mode> "PUSHED" an unsolicited result code +CAPTT: 0 is issued to the TE.

The read command returns the current <mode>.

The test command returns values supported as a compound value.

Defined Values

<mode>: integer type.

0 status of the PTT key is RELEASED

1 status of the PTT key is PUSHED for a limited time by <time> in seconds

2 status of the PTT key is PUSHED for an infinite time

<time>: integer type

3..255 this gives the time in seconds to wait before the PTT key is released, default value 10

Implementation

Mandatory for a MT supporting AT commands only and VGCS is implemented.

11.1.5 Voice group call uplink status presentation +CAULEV

Table 136: +CAULEV parameter command syntax

Command	Possible Response(s)
+CAULEV=[<mode>]	*+CME ERROR: <err>*
+CAULEV?	+CAULEV: <mode>,[<status>] *+CME ERROR: <err>*
+CAULEV=?	+CAULEV: (list of supported <mode>s)

Description

The set command enables or disables the presentation of uplink access status for an active VGCS call. When enabled the unsolicited result code +CAULEV: <status> is returned from MT to TE whenever the call uplink status changes.

Read command returns the current uplink <status> and the selected <mode>.

The test command returns values supported as a compound value.

Defined Values

<mode>: integer type; status of unsolicited result code presentation

0 disabled

1 enabled

<status>: integer type; network uplink access status

0 uplink free

1 uplink busy

Implementation

Mandatory for a MT supporting AT commands only and VGCS is implemented.

11.1.6 List current voice group and voice broadcast calls +CALCC

Table 137: +CALCC action command syntax

Command	Possible response(s)
+CALCC=<mode>	[+CALCC: <GId>,<GCA>,<service>,<stat>,<dir>,<ack_flag>[,<priority>]] [<CR><LF>+CALCC: <GId>,<GCA>,<service>,<stat>,<dir>,<ack_flag>[,<priority>] [...]] *+CME ERROR: <err>*
+CALCC=?	+CALCC: (list of supported <mode>s)

Description

The set command returns for <mode>=1 the active voice group or voice broadcast call and for <mode>=0 a list of all current running voice group and voice broadcast calls for which the user has a subscription and the GId is activated on the SIM. If the command succeeds but no calls are available, OK response is returned.

Defined values

<mode>: integer type

0 return a list of all current running voice group and voice broadcast calls for which the user has a subscription and the GId is activated on the SIM

1 return the active voice group or voice broadcast call

<GId>: a digit string that specifies the group identification of the voice group or voice broadcast call.

<GCA>: a digit string that specifies the group call area of the voice group or voice broadcast call.

<service>: integer type (tele-service)

17 voice group call

18 voice broadcast call

<stat>: integer type (state of the call)

0 active, i.e. user participating at the call as talker or listener

1 held, the call is running but put to background, notifications ignored

2 incoming (MT call), the user doesn't respond to notifications of this call yet

<dir>: integer type (direction of the call)

0 mobile originated (MO) call, the user is the originator of the call

1 mobile terminated (MT) call, the user is not the originator of the call

<ack_flag>: integer type; proposes that a predefined confirmation procedure is to be used after the call is ended

0 confirmation procedure is not required

1 confirmation procedure is required

<priority>: integer type; identifies the priority level of the voice group or voice broadcast call. The values are specified in 3GPP TS 22.067 [54].

Implementation

Optional. Recommended for an MT supporting AT commands only and VGCS or VBS is implemented.

11.1.7 Voice group or voice broadcast call state attribute presentation +CACSP

Table 138: +CACSP parameter command syntax

Command	Possible Response(s)
+CACSP=[<mode>]	*+CME ERROR: <err>*
+CACSP?	+CACSP: <mode>[,<da>,<ua>,<comm>,<oi>] *+CME ERROR: <err>*
+CACSP=?	+CACSP: (list of supported <mode>s)

Description

The set command enables or disables the presentation of unsolicited result code `+CACSP: <da>,<ua>,<comm>,<oi>` from MT to TE if the call control state attributes of the active voice group or voice broadcast call changes.

Read command returns the current call control state attributes `<da>`, `<ua>`, `<comm>`, `<oi>` and selected `<mode>`.

The test command returns values supported as a compound value.

Defined Values

`<mode>`: integer type; status of unsolicited result code presentation

0 disabled

1 enabled

`<da>`: integer type. User connection in the downlink

0 not attached

1 attached

`<ua>`: integer type. User connection in the uplink

0 not attached

1 attached

`<comm>`: integer type. The MT assumes that communication with its peer entity is

0 not enabled in both directions

1 enabled in both directions

`<oi>`: integer type. The MT assumes to be

0 not the originator of the call

1 the originator of the call

Implementation

Optional. Recommended for a MT supporting AT commands only and VGCS or VBS is implemented.

11.1.8 NCH support indication +CANCHEV

Table 139: +CANCHEV parameter command syntax

Command	Possible Response(s)
`+CANCHEV=[<mode>]`	*`+CME ERROR: <err>`*
`+CANCHEV?`	`+CANCHEV: <status>,<mode>` *`+CME ERROR: <err>`*
`+CANCHEV=?`	`+CANCHEV: (`list of supported `<mode>`s`)`

Description

The set command enables or disables the presentation of unsolicited result code `+CANCHEV: <status>` from MT to TE if the status of the network NCH support information changes.

Read command returns in parameter `<status>` the network NCH support information in the selected cell and the selected `<mode>`.

The test command returns values supported as a compound value.

Defined Values

<mode>: integer type; status of unsolicited result code presentation

0 disabled

1 enabled

<status>: integer type; network NCH support information

0 NCH not available

1 NCH available

Implementation

Optional. Recommended for a MT supporting AT commands only and VGCS or VBS is implemented.

11.1.9 Originator to dispatcher information +COTDI

Table 140:+COTDI parameter command syntax

Command	Possible response(s)
+COTDI=<message>[,<OTDIE>[,<message>[,<OTDIE>]]]	*+CME ERROR: <err>*
+COTDI?	[+COTDI: <message>,<OTDIE>[,<message>,<OTDIE>]]
+COTDI=?	+COTDI: (list of supported <message>s)

Description

This command allows control of the Originator-to-Dispatcher Information and Compressed Originator-to-Dispatcher Information according to 3GPP TS 44.068 [52] and 3GPP TS 44.069 [53].

When <message> and <OTDIE> are both present the string specified in <OTDIE> is included in the corresponding group or broadcast control <message> as the value part of the Originator-to-Dispatcher Information Element or Compressed Originator-to-Dispatcher Information Element (as defined in 3GPP TS 44.068 [52] and 3GPP TS 44.069 [53]) into all subsequent messages of type <message>. If parameter <message> is present but parameter <OTDIE> is not present then the Originator-to-Dispatcher Information Element shall not be present in subsequent messages of type <message>.

The read command returns the content of <message> and of <OTDIE>. If no <OTDIE> is available, no information text shall be returned.

Test command returns values supported as a compound value.

Defined values

<message>

0 SETUP message containing the outgoing Originator-to-Dispatcher Information Element

1 IMMEDIATE SETUP 2 message containing the outgoing Compressed Originator-to-Dispatcher Information Element

<OTDIE>: the Originator-to-Dispatcher Information Element or Compressed Originator-to-Dispatcher Information Element (as defined in 3GPP TS 44.068 [52] and 3GPP TS 44.069 [53]) in hexadecimal character format (for hexadecimal format, refer +CSCS).

Implementation

Optional.

11.1.10 Short data transmission during ongoing VGCS +CEPTT

Table 141: +CEPTT action command syntax

Command	Possible response(s)
+CEPTT=<mode>,<data>,<dataid>,<dist-param>	*+CME ERROR: <err>*
+CEPTT=?	+CEPTT: (list of supported <mode>s),(list of supported <dataid>s),(list of supported <dist-param>s)

Description

The execute command emulates the Short Data Transmission during ongoing VGCS according to 3GPP TS 42.068 [55] and 3GPP TS 43.068 [49].

The application indicator <mode> is used to identify whether the application data is an application-specific data or is a confirmation. The data identifier <dataid> is to provide a sequence number of the sending of application data. The value of the data identifier <dataid> is dependent on the value of the application indicator <mode>. If the application indicator <mode> indicates sending application data to the network, the data identifier <dataid> contains a number from the range between 0 and 15 which is generated by the mobile station. If the application indicator <mode> indicates sending confirmation of the reception of the application data, the data identifier <dataid> shall contain the data identifier which was received in the data identity sent by the previous sender. The distribution parameter <dist-param> contains information to which participants shall be transferred the short data.

The response CEPTT string from the network to the other participants is returned in a subsequent unsolicited result code +CEPTT: <mode>,<data>,<dataid>,<dist-param>[,<number>].

Test command returns values supported as a compound value.

Defined values

<mode>: integer type

0 sending of application-specific data

1 confirmation of receiving application-specific data

<data>: 9 bytes application-specific data in hexadecimal character format (for hexadecimal character format, refer +CSCS).

<dataid>: a number from the range between 0 and 15

<dist-param>: a number from the range between 1 and 7

1 data shall be distributed only to network application

2 data shall be distributed only to dispatchers

3 data shall be distributed to network application and to dispatchers

4 data shall be distributed to talkers and listeners

5 data shall be distributed to talkers and listeners and to network application

6 data shall be distributed to talkers and listeners and to dispatchers

7 data shall be distributed to network application, to talkers and listeners and to dispatchers

Implementation

Optional.

11.1.11 Group Id prefixes capability +CGIPC

Table 11.1.11-1: +CGIPC action command syntax

Command	Possible Response(s)
+CGIPC	+CGIPC: <status> +CME ERROR: <err>
+CGIPC=?	

Description

Execution command returns the MT Group Id prefix management capability, according to 3GPP TS 43.068 [49].

Defined values

<status>: integer type, value

0 MT is not able to manage Group Id prefixes

1 MT is able to manage Group Id prefixes

Implementation

Optional.

11.2 Modem compatibility commands

11.2.0 General

This sub-clause describes how existing AT commands, designed for use with a modem, may be used to control a VGCS or VBS supporting MT. This is to provide backwards compatibility with existing communications software.

11.2.1 Request VGCS or VBS service 'D'

Table 141a: D command syntax

Command	Possible Response(s)
D*<SC_1>[*<SC_2>[*<SC_3>]]#<GId>;	+CME ERROR: <err>

Description

This Dial command extension is a service request application according to 3GPP TS 22.030 [19]. No further commands may follow on the AT command line.

Responses

When the call has terminated, either as a result of an orderly termination or an error, the MT shall return the NO CARRIER final result code.

Possible error responses include +CME ERROR: <err> when error is related to MT functionality. The requested service, GId and priority level are checked against the subscriptions of the user and the status of the GId stored on the SIM. In case if no subscription is available for this service, GId or priority level or the GId is deactivated an ERROR or +CME ERROR result code is returned. The requested Group Id prefix is not checked against susbscription. The Group Id prefixes are not stored in the SIM/USIM card. If Service Code for Group Id prefix is used, but is not managed by MT,

an ERROR or +CME ERROR result code is returned. See +CME ERROR extensions for VGCS, VBS and eMLPP in subclause 9.2.3.

Detailed error report of an unsuccessful originated call can be obtained with command Extended Error Report +CEER (if implemented).

NOTE 1: The dial string conforms to the syntax specified in 3GPP TS 22.030 [19].

Defined Values

<SC_1>: Service Code is a digit string which identifies a request to use.

value 17 Voice Group Call Service

value 18 Voice Broadcast Service

<SC_2>: Service Code is a digit string which identifies a request to use eMLPP priority . Service Code values for different priority levels are specified in 3GPP TS 22.030 [19].

<GId>: a digit string that specifies the group identification of a called party as specified in 3GPP TS 43.068 [49].

<SC_3>: a digit that specifies a Group Id prefix as specified in 3GPP TS 43.068 [49].

NOTE 2: <SC_3> is only applicable when <SC_1> defines Voice Group Call Service.

Implementation

Mandatory for a MT supporting AT commands only and VGCS or VBS is implemented.

11.2.2 Termination of an voice group or voice broadcast call 'H'

The V.250 'H' or 'H0' (On-hook) command may be used to terminate an ongoing voice group or voice broadcast call. The MT responds with OK. It is an error to issue the 'H' command when there is no outstanding network request.

It is an error to issue the 'H' command if the user is in group receive mode or the user is not the originator of the call and a ERROR or +CME ERROR result code is returned to the TE.

NOTE: This is an extension to the usage of the 'H' command that is described in ITU-T Recommendation V.250 [14]..

Implementation

Mandatory for a MT supporting AT commands only and VGCS or VBS is implemented.

11.3 SIM commands supporting the VGCS and VBS

11.3.1 VGCS subscriptions and GId status +CGCS

Table 142: +CGCS parameter command syntax

Command	Possible response(s)
+CGCS=<GId>,<status>	*+CME ERROR: <err>*
+CGCS?	+CGCS: <GId>,<status> [<CR><LF>+CGCS: <GId>,<status> [...]] *+CME ERROR: <err>*
+CGCS=?	+CGCS: (list of supported <GId>s),(list of supported <status>s)

Description

This command works with SIM Card and when the GSM Application is selected in UICC. Function with USIM is for further study. The set command is used to edit the status of the GId EF_{VGCSS} on the SIM.

The read command returns all subscribed GIds in EF_{VGCS} and their status in EF_{VGCSS} from the SIM.

The test command returns the values supported by the UE.

Defined values

`<GId>` integer type, group Id as specified in 3GPP TS 22.030 [19]

`<status>`: integer type, value

0 deactivated

1 activated

Implementation

Mandatory for a MT supporting AT commands only and supporting VGCS.

11.3.2 VBS subscriptions and GId status +CBCS

Table 143: +CBCS parameter command syntax

Command	Possible response(s)
`+CBCS=<GId>,<status>`	`+CME ERROR: <err>`

`+CBCS?`	`+CBCS: <GId>,<status>`
	`[<CR><LF>+CBCS: <GId>,<status>`
	`[...]]`
	
	`+CME ERROR: <err>`

`+CBCS=?`	`+CBCS: (`list of supported `<GId>`s`),(`list of supported `<status>`s`)`

Description

This command works with SIM Card and when the GSM Application is selected in UICC. Function with USIM is for further study. The set command is used to edit the status of the GId EF_{VBSS} on the SIM.

The read command returns all subscribed GIds in EF_{VBS} and their status in EF_{VBSS} from the SIM.

The test command returns the values supported by the UE.

Defined values

`<GId>` integer type, group Id as specified in 3GPP TS 22.030 [19]

`<status>`: integer type, value

0 deactivated

1 activated

Implementation

Mandatory for a MT supporting AT commands only and supporting VBS.

11.4 Informative examples

As supplementary services may be invoked and controlled using dial command according to 3GPP TS 22.030 [19].

Examples of voice group call service request usage:

`ATD*17*753#500;`	(originate voice group call with the priority level 3)
`OK`	(voice group call setup was successful)
`ATD*17*750*3#299;`	(originate voice group call for Group Id 299, with Group Id prefix 3 and priority level 0)
`OK`	(voice group call setup was successful)
`ATD*17**6#599;`	(originate voice group call for Group Id 599, with Group Id prefix 6 and default priority selected by the network)
`OK`	(voice group call setup was successful)

12 Commands for USIM application toolkit

12.1 General

If a UICC connected to an MT uses USIM Application Toolkit (USAT), some USAT features can be provided by the MT itself, whereas other features can be implemented in the TE. This applies especially to MTs with limited capabilities, where the user interface could be provided by the TE.

If there are multiple entities inside the TE providing USAT services, for the purpose of this specification, the TE is visible as one entity handling AT commands and responses on the interface to the TA/MT, see figure 12.1-1.

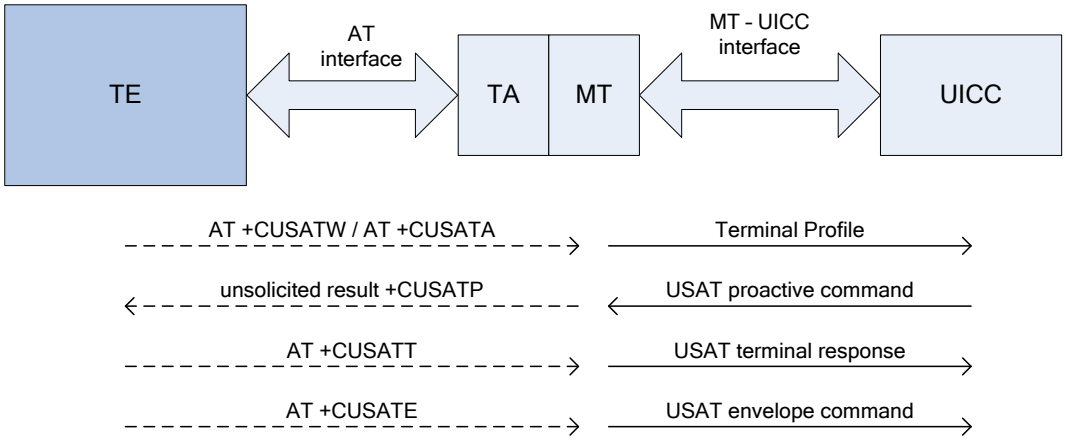

Figure 12.1-1: Overview of the interfaces between TE, TA/MT and UICC for USAT

The AT commands for definition of the USAT profiles and transmission of USAT proactive commands, USAT terminal responses and USAT envelope commands between the TE and UICC are specified in the subsequent subclauses.

Compared to APDUs, where the MT is the initiator, USAT defines logic where the UICC is the initiator of the USAT proactive commands and the MT sends responses to these commands. Due to that, USAT proactive commands are sent in unsolicited result codes, whereas the associated responses are transported in subsequent AT commands.

12.2 Commands specific to MTs supporting USAT

12.2.1 Read USAT profile +CUSATR

Table 12.2.1-1: +CUSATR action command syntax

Command	Possible response(s)
+CUSATR[=<profile_storage>]	[+CUSATR: <profile_storage>,<profile>] [<CR><LF>+CUSATR: <profile_storage>,<profile> [...]] *+CME ERROR: <err>*
+CUSATR=?	+CUSATR: (list of supported <profile_storage>s)

Execution command +CUSATR=<profile_storage> returns the profile specified by <profile_storage>. Execution command issued without parameter; +CUSATR, returns all profiles.

Test command returns values supported as a compound value.

Defined values

<profile_storage>: integer type.

0 TE profile that can be set with +CUSATW.

1 MT profile that can be set with +CUSATW.

2 MT default profile that reflects the inherent, default supported facilities of the MT.

3 UICC profile that reflects the currently active UICC profile that was sent to the UICC in the last TERMINAL PROFILE command.

4 UICC EF_{UST}. The elementary file that indicates services available in the USIM.

5 List of MT only facilities (facilities that are not allowed to be assigned to the TE, see 3GPP TS 31.111 [92]).

<profile>: string type in hexadecimal character format. The profile describing the supported facilities of the referenced <profile_storage> as specified for the Terminal Profile in 3GPP TS 31.111 [92] or for the related EF in 3GPP TS 31.102 [59].

Implementation

Optional.

12.2.2 Write USAT profile +CUSATW

Table 12.2.2-1: +CUSATW action command syntax

Command	Possible response(s)
+CUSATW[=<profile_storage>[,<profile>]]	+CUSATW: <profile_storage>,<conflict_profile> *+CME ERROR: <err>*
+CUSATW=?	+CUSATW: (list of supported <profile_storage>s)

Description

Execution command without parameters resets stored TE and MT profiles to their default values. Adding parameter <profile_storage> to the AT command resets only the referred storage to its default value. Execution command issued with accompanied parameter <profile>, stores the given <profile> to non-volatile memory in the MT.

Upon an attempt to store or reset a profile that conflicts with an already stored profile or the list of MT only facilities, the operation fails and the profile referred to by command parameter <profile_storage> remains unchanged. The MT responds with +CUSATW: <profile_storage>,<conflict_profile> where <profile_storage> refers the conflicting profile followed by the final result code +CME ERROR: 3 (Operation not allowed). The rules for detecting conflicts are defined in 3GPP TS 31.111 [92].

Successful execution of the command does not result in any information response.

<profile_storage>: integer type.

0 TE. Refers profile storage for the facilities supported by the TE. Default value is a blank profile with all bits set to zero.

1 MT. Refers profile storage for the facilities to be supported by MT, which can be a subset of the default MT facilities (see +CUSATW). The TE can choose to register a subset of the MT default profile, typically omitting facilities also supported by the TE profile. Default value is the MT default profile.

5 Refers to a conflict between the TE profile and the list of MT only facilities.

<profile>: string type in hexadecimal character format. The profile describing the supported USAT facilities of the referenced <profile_storage> as specified for the Terminal Profile in 3GPP TS 31.111 [92].

<conflict_profile>: string type in hexadecimal character format. A bitwise AND of two profiles, showing the conflicts, that is, USAT facilities supported by both profiles. See description of Terminal Profile in 3GPP TS 31.111 [92].

Implementation

Optional.

12.2.3 Profile download upon start-up +CUSATD

Table 12.2.3-1: +CUSATD parameter command syntax

Command	Possible response(s)
+CUSATD=[<download> [,<reporting>]]	*+CME ERROR: <err>*
+CUSATD?	+CUSATD: <download>,<reporting>
+CUSATD=?	+CUSATD: (list of supported <download>s),(list of supported <reporting>s)

Description

This command determines if, and optionally which profile should be downloaded to the UICC automatically upon start-up. If, prior to a restart/start-up, the +CUSATD settings have not been altered, then the default settings determine the behaviour upon start-up. However, if the parameters of +CUSATD has been set to other than default and then a restart is performed (e.g. by +CFUN), these values determine the behaviour. This is true for one restart only after altering +CUSATD parameters as they are always reset to default at the end of the next UICC start-up (i.e. when the USIM initialisation as specified in 3GPP TS 31.102 [98] has been completed).

The command without parameters resets the parameters to their default values.

The command can be used if the UICC is already in active state upon +CUSATA and the UICC does not support the "Additional TERMINAL PROFILE after UICC activation" feature (see 3GPP TS 31.111 [92]).

+CUSATD=<download>,1 also enables the unsolicited result code +CUSATS: <UICC_state>. The MT uses this unsolicited result code to indicate that a profile download is performed (setting +CUSATD=0,1 or +CUSATD=1,1) or

that it is ready for profile download (setting +CUSATD=2,1). In both cases, the MT also indicates the end of UICC start-up by the unsolicited result code +CUSATS: 4. If the UICC is awaiting PIN verification during start-up, this is also reported.

When using +CUSATD=1, the +CUSATA=1 command has to be used to enable TE profile facility handling after restart. In the time between profile download and issuance of +CUSATA=1, the UICC may already attempt to issue proactive commands. The MT will not send these to the TE, but rather give the UICC the response "terminal currently unable to process command" autonomously. The UICC may implement only a limited number of retries, which can potentially leave USAT in an unwanted state if the +CUSATA=1 command arrives late.

NOTE: Care has to be taken when using +CUSATD=2. If no +CUSATA=2 or +CUSATA=3 is sent during start-up, USAT is also blocked for the MT.

Refer subclause 9.2 for possible <err> values.

Defined values

<download>: integer type. Parameter decides when/if to perform a profile download to UICC and which profile to download. The default value is implementation specific.

0 Download MT default profile automatically during next start-up.

1 Download the combined TE and MT profile (merger of the profiles written by +CUSATW) automatically during next start-up. The rules for merging profiles are defined in 3GPP TS 31.111 [92].

2 Halt next UICC start-up when ready for profile download. Profile to download will be selected and download will be triggered by +CUSATA.

<reporting>: integer type. Parameter enables unsolicited result code +CUSATS: <UICC_state> to notify the TE about a new state during start-up.

0 Disable +CUSATS, i.e. no notification.

1 Enable +CUSATS, i.e. notify TE.

<UICC_state>: integer type. Parameter reports that the UICC entered a new state during start-up or that the UICC ended startup and entered active state.

1 UICC start-up halted and ready for profile download. This state is reached if +CUSATD=2 was issued before restart. UICC start-up will continue upon +CUSATA=2 or +CUSATA=3.

2 Profile download completed, UICC startup continuing.

3 UICC awaiting PIN verification.

4 UICC active.

Implementation

Optional.

12.2.4 Activate USAT profile +CUSATA

Table 12.2.4-1: +CUSATA action command syntax

Command	Possible response(s)
+CUSATA[=<activation>]	+CUSATA: <UICC_state>[,<additional_profile_support>] *+CME ERROR: <err>*
+CUSATA=?	+CUSATA: (list of supported <activation>s)

Description

Execution command +CUSATA retrieves the current UICC state or downloads a profile to the UICC and/or activates handling of the TE profile facilities.

A positive result upon a +CUSATA=1 or +CUSATA=3 command (also) enables TE profile facility handling via unsolicited result codes +CUSATP: <proactive_command> and +CUSATEND. The MT uses the unsolicited result code +CUSATP: <proactive_command> to forward to the TE proactive commands issued by the UICC. The unsolicited result code +CUSATEND is issued by the MT when the UICC indicates that the proactive command session is terminated, i.e. in response to a USAT terminal response, the UICC indicates that no other USAT proactive command is pending. Lastly, terminal responses to the proactive commands can now be issued with +CUSATT=<terminal_response> and envelope commands can be issued with +CUSATE=<envelope_command>.

If the action requested by the +CUSATA command can not be performed, the information response +CUSATA: <UICC_state>,[<additional_profile_support>] is returned with appropriate values, followed by the final result code +CME ERROR: 4 (Operation not supported) in case the UICC does not support USAT at all, or the final result code +CME ERROR: 3 (Operation not allowed) in all other cases.

If the UICC is already in active state and the UICC does not support the "Additional TERMINAL PROFILE after UICC activation" feature (see 3GPP TS 31.111 [92]), the TE has the option to perform a reset of the UICC or use +CFUN to get back to an initial non-active UICC state. The +CUSATD command can be used to set profile handling upon the next restart.

All USAT proactive commands that the MT does not process itself and all terminal responses from the TE are transparently forwarded by the MT. The routing mechanism for USAT commands supported by both entities is specified in 3GPP TS 31.111 [92].

Test command returns values supported as a compound value.

Refer subclause 9.2 for possible <err> values.

Defined values

<activation>: integer type.

0 Return status information only, in information response: +CUSATA: <UICC_state>[,<additional_profile_support>].

1 Enable TE profile facility handling only, no profile download. This action can only be used if the combined TE and MT profile was downloaded during start-up (setting +CUSATD=1).

2 Download MT default profile.

3 Download the combined TE and MT profile (merger of the profiles written by +CUSATW) an enable TE profile facility handling. The rules for merging profiles are defined in 3GPP TS 31.111 [92].

<UICC_state>: integer type.

0 UICC start-up in progress, before profile download.

1 UICC start-up halted and ready for profile download. This state is reached if +CUSATD=2 was issued before restart. UICC start-up will continue upon +CUSATA=2 or +CUSATA=3.

2 UICC start-up in progress, after profile download.

3 UICC awaiting PIN verification.

4 UICC active.

<additional_profile_support>: integer type. Indicates whether the UICC supports the "Additional TERMINAL PROFILE after UICC activation" feature (see 3GPP TS 31.111 [92]). The value may not be available during early phases of start-up.

0 No support.

1 Supported.

<proactive_command>: string type in hexadecimal character format. Proactive command as defined in 3GPP TS 31.111 [92], consisting of the full BER-TLV data object.

Implementation

Optional.

12.2.5 Send USAT terminal response +CUSATT

Table 12.2.5-1: +CUSATT action command syntax

Command	Possible response(s)
+CUSATT=<terminal_response>	*+CME ERROR: <err>*
+CUSATT=?	

Description

Execution command sends a USAT terminal response to the MT as an answer to a preceding USAT proactive command sent from the UICC with unsolicited result code +CUSATP: <proactive_command> (see +CUSATA command description).

Refer subclause 9.2 for possible <err> values.

Defined values

<terminal_response>: string type in hexadecimal character format. Terminal response to a proactive command as defined in 3GPP TS 31.111 [92], consisting of the full BER-TLV data object.

Implementation

Optional.

12.2.6 Send USAT envelope command +CUSATE

Table 12.2.6-1: +CUSATE action command syntax

Command	Possible response(s)
+CUSATE=<envelope_command>	+CUSATE: <envelope_response>[,<busy>] [<CR><LF>+CUSATE2: <sw1>,<sw2>] *+CME ERROR: <err>*
+CUSATE=?	

Description

Execution command allows the TE to send a USAT envelope command to the MT. If the UICC provides response data to the command or indicates that USAT is busy, the information response +CUSATE: <envelope_response>[,<busy>] is returned. A second line of information response +CUSATE2: <sw1>,<sw2> may be provided if the MT presents the status words provided by the UICC.

Refer subclause 9.2 for possible <err> values.

Defined values

<envelope_command>: string type in hexadecimal character format. Envelope command as defined in 3GPP TS 31.111 [92], consisting of the full BER-TLV data object.

<envelope_response>: string type in hexadecimal character format. Response to the envelope command as defined in 3GPP TS 31.111 [92], consisting of the full BER-TLV data object. An empty string is provided if the UICC does not have any response data to provide.

<busy>: integer type.

0 UICC indicated normal ending of the command.

1 UICC responded with USAT is busy, no retry by the MT.

2 UICC responded with USAT is busy even after one or more retries by the MT.

<sw1>: integer type. Status word information from the envelope response returned by the UICC as defined in ETSI TS 102 221 [60], subclause 10.2. The parameter can be delivered to the TE both in the case of successful and failed execution of the envelope command.

<sw2>: integer type. For description see <sw1>.

Implementation

Optional.

12.3 Informative examples

These examples provide a sequence of interactions where USAT commands and responses are transmitted in AT commands. As it would make the examples unreadable, USAT data is not given in its hexadecimal representation (which is found in 3GPP TS 31.111 [92]), but in abstract textual form. For readability, only a subset of USAT facilities typically provided in a profile is given in the examples. Resulting or triggering actions on the MT-UICC interface are also indicated in the examples.

First, the TE reads the MT default profile:

```
AT+CUSATR=2
+CUSATR: 2,<PLAY TONE, SET UP MENU, DISPLAY TEXT, EVENT MENU SELECTION, ...>
OK
```

The TE removes some USAT facilities in the MT by writing a new MT profile, which contains those facilities that are to be handled by the MT:

```
AT+CUSATW=1,<PLAY TONE, ...>
OK
```

Now the TE tries to write a TE profile that conflicts with the MT profile. The MT responds with the conflict information and rejects the command.

```
AT+CUSATW=0,<PLAY TONE, SET UP MENU, DISPLAY TEXT, EVENT MENU SELECTION, ...>
+CUSATW: 1,<PLAY TONE>
+CME ERROR: 3
```

The next attempt to write a TE profile is successful and the TE activates the profiles.

```
AT+CUSATW=0,<SET UP MENU, DISPLAY TEXT, EVENT MENU SELECTION, ...>
OK
AT+CUSATA=3
    MT -> UICC: TERMINAL PROFILE
    UICC -> ME: proactive command pending
OK
```

The UICC sends a SET UP MENU proactive command, resulting in the command being transferred to the TE and the latter confirming it with a terminal response; thereafter the proactive session ends.

```
    UICC -> MT: SET UP MENU
+CUSATP: <SET UP MENU>
AT+CUSATT=<OK>
    MT -> UICC: TERMINAL RESPONSE: OK
    UICC -> ME: no proactive command pending
OK
+CUSATEND
```

A selection by the subscriber in the menu results in an ENVELOPE being sent to the MT and forwarded to the UICC. The UICC responds with the next proactive command DISPLAY TEXT. After the terminal response, the proactive session ends.

```
AT+CUSATE=<MENU SELECTION, item=1>
    MT -> UICC: ENVELOPE(MENU SELECTION, item=1)
    UICC -> ME: proactive command pending
OK
    UICC -> MT: DISPLAY TEXT
+CUSATP: <DISPLAY TEXT>
AT+CUSATT=<OK>
    MT -> UICC: TERMINAL RESPONSE: OK
    UICC -> ME: no proactive command pending
OK
+CUSATEND
```

13 Commands for enhanced support of dialling

13.1 General

This clause defines commands that a TE may use when dialling. These commands can be used instead of ATD that does not support dialling of URIs.

Subclause 13.2 defines commands for dialling (direct dialling and dialling from phonebook) as well as hangup of these calls.

Subclause 13.3 contains relevant examples.

13.2 Commands for dialling

13.2.1 Dial URI +CDU

Table 13.2.1-1: +CDU action command syntax

Command	Possible response(s)
+CDU=<action>[,<URI>[,<client>[,<mpidx>[,<CLIR_OIR>[,<CUG_pointer>]]]]]	*+CME ERROR: <err>* **when <action>=0 and command successful:** [+CDUT: <URI_scheme>[,<client>] [<CR><LF>+CDUT: <URI_scheme>[,<client>]] [...]] **when <action>=1 and command successful:** [+CDU: <ccidx>] **when <action>=1 and command unsuccessful:** [+CDUI: <cause>]
+CDU=?	+CDU: (list of supported <URI_scheme>s)

Description

Execution command can be used to dial a URI (with <action>=1) for initiating communication using the specified communication client with the specified media profile. With <action>=0 the command can query which clients are supported for the URI types supported.

When the command is used to query the supported URI types (i.e. <action>=0), the URI types are provided by +CDUT: <URI_scheme>. When the command is used to dial a URI (i.e. <action>=1) and the dialling succeeds the command is terminated by +CDU: <ccidx> and OK. The parameters <CLIR_OIR> and <CUG_pointer> are used to set the per call basis values of the supplementary services CLIR / OIR and CUG.

The unsolicited result code +CDUU: <ccidx>,<code> can be subsequently provided to give further basic information about the call as it progresses. The value of the <ccidx> is kept until the call is released. See command +CMCCS and unsolicited result code +CMCCSI for provision of additional information about the call setup.

If "Call control by USIM" see 3GPP TS 31.111 [92] subclause 4.5 is activated by the USIM, it is the responsibility of the communication client to perform any required call control verification according to the procedures defined in 3GPP TS 31.111 [92] subclause 7.3 prior to the execution of the call setup.

When call control by USIM is applicable, the communication client shall perform the call control (for example by using the Commands for USIM application toolkit, see clause 12) and act upon the result of the call control as follows:

- if call control by USIM performs no modifications to the call request, the call setup shall be executed without any changes to the data;
- if call control by USIM modifies the call request, the call setup shall be executed using the modified data as provided by the call control;
- if call control by USIM modifies the call request to a different service, the appropriate AT command(s) for that service shall be executed; and
- if call control by USIM rejects the call request, the call setup shall not be executed.

If the attempt to dial does not succeed, the command is terminated by ERROR / CME ERROR or +CDUI: <cause> and OK. Refer subclause 9.2 for possible <err> values.

Test command returns values supported as compound values.

Defined values

<action>: integer type

0 Query supported communication clients for the supported URI types. Execution command +CDU=0 returns a line of intermediate result +CDUT: <URI_scheme>[,<client>] for every supported <URI_scheme>.

1 Dial <URI> using the indicated communication client with the indicated media profile.

<URI>: string type. URI including the prefix specifying the URI type. The URI may include URI parameters. The used character set should be the one selected with Select TE Character Set +CSCS.

<CLIR_OIR>: integer type. Indicates per call basis changes provided to the supplementary service CLIR / OIR. See +CLIR for further information of the related parameters.

<u>0</u> No per call based changes to CLIR / OIR, the settings with +CLIR apply

1 Restrict the CLI presentation for the current call (CLIR / OIR invocation)

2 Allow CLI presentation for the current call (CLIR / OIR suppression)

<CUG_pointer>: integer type. Indicates per call basis changes provided to the supplementary service closed user group. See +CECUG for further information of the related parameters.

<u>0</u> No per call basis changes to CUG

1-n Indicates the CUG index to use for this call. The CUG index and corresponding values used as set with command +CECUG (enable CUG temporary mode). The maximum value of n is implementation specific.

NOTE 1: 3GPP TS 22.085 [21] indicates that each individual subscriber can be a member of a maximum of 10 CUGs.

<URI_scheme>: string type represented with IRA characters. Parameter identifies supported URI scheme. This parameter shall not be subject to conventional character conversion as per +CSCS.

"sip" Internet Assigned Number Authority (IANA) registry as per RFC 3969 [113], used with Session Initiation Protocol (SIP), see RFC 3261 [111].

"tel" Internet Assigned Number Authority (IANA) registry as per RFC 5341 [114], used with SIP, see RFC 3966 [112].

"urn" Internet Assigned Number Authority (IANA) registry according to RFC 2141 [116], only used with SIP in combination with a suitable uniform resource name (URN) namespace.

NOTE 2: The URN namespace "service" listed in the Internet Assigned Number Authority (IANA) registry according to RFC 3406 [117] is an example of a namespace that can be used in SIP in combination with the URI scheme "urn". Not all top-level service labels listed in the Internet Assigned Number Authority (IANA) registry according to RFC 5031 [118] need to be supported in combination with the URN namespace "service".

<client>: integer type. Communication client indication.

1 MMTel. The UE procedures in 3GPP TS 24.173 [87] apply.

128 – 255 Reserved for vendor specific communication clients.

<mpid*x*>: integer type. Media profile identification number. The parameter is local to the TE-MT interface. The range of permitted values (minimum value = 1) is returned by the test form of the command +CDEFMP. When +CDU is used for dialling (i.e. with <action>=1) this number can be provided to point to a particular media profile. The provided media profile identification number is the number being returned by +CDEFMP when defining the media profile. Usage and value of a default media profile is implementation specific.

<ccid*x*>: integer type. Call identification number as described in 3GPP TS 22.030 [19] subclause 6.5.5.1. This number can be used in +CHLD command operations. Value range is from 1 to N. N, the maximum number of simultaneous call control processes is implementation specific.

NOTE 3: When +CMCCS is supported, the call identification number is not reset until the unsolicited result code +CMCCSI has indicated that the <ccstatus>=1 (Idle).

<code>: string type represented with IRA characters. Cause codes giving main call state information. Intermediate call status responses can be reported using the unsolicited result code +CMCCSI (see command +CMCCS). This parameter shall not be subject to conventional character conversion as per +CSCS.

"BUSY"	Busy signal detected
"ANSWERED"	Remote party has answered and the connection between A and B has been established
"NO ANSWER"	Connection completion timeout
"CONNECTION TERMINATED"	The connection is terminated from either the remote party or the network, or the attempt to establish the call setup is unsussessful

NOTE 4: The cause code "CONNECTION TERMINATED" also covers all other situations where a call is unsuccessfully terminated. Examples of this are all types of network congestion or lack of radio coverage.

<cause>: integer type. Reason code providing further details why the call setup fails in the terminal before signalling towards the network is initiated.

0 Outgoing call attempt rejected by (U)SIM/ME, unspecified

1 Outgoing call attempt rejected by barring services in the SIM/ME

Implementation

Optional.

13.2.2 Dial URI from phonebook +CDUP

Table 13.2.2-1: +CDUP action command syntax

Command	Possible response(s)
+CDUP=<pb_field>,<str>[,<client>[,<mpidx>[,<storage>]]]	*+CME ERROR: <err>* **when command successful:** [+CDUP: <ccidx>]
+CDUP=?	

Description

Execution command dials a URI for initiating communication using the specified communication client with the specified media profile by referencing either the alphanumeric phonebook field, or the index or entry-number in the phonebook. Supported clients URI schemes are those returned with +CDU=0. If parameter <storage> is not included, the relevant phonebook is specified by the current +CPBS setting. If the referenced URI is not found, OK is returned and nothing is dialled.

+CDUP=0,<str> originates a call to the first URI found in the selected phonebook which has a partial or full match to <str>. The mechanism to search for the first match through a phonebook is implementation specific. Upon no match in the selected phonebook, it is manufacturer specific if and what further phonebook memories are searched.

+CDUP=1,<str> originates a call to the URI in memory location <str>, where <str> must contain a decimal number. The index or entry-number in the phonebook is expressed by <str>.

How the digit string or the index or entry-number is associated with entries is implementation specific.

The command is terminated by +CDUP: <ccidx> and OK or ERROR / CME ERROR. Refer subclause 9.2 for possible <err> values.

Defined values

<pb_field>: integer type

0 Refers alphanumeric field of the phonebook. <str> may contain valid characters for alphanumeric field of the selected phonebook.

1 Refers index or entry-number in the phonebook.

<str>: string type. Valid characters are governed by <pb_field>.

<storage>: string type. Supported values are the same as that supported for <storage> of +CPBS.

<client>: integer type. Communication client indication.

1 MMTel. The UE procedures in 3GPP TS 24.173 [87] apply.

128 – 255 Reserved for vendor specific communication clients.

<mpidx>: integer type. Media profile identification number. The parameter is local to the TE-MT interface. The range of permitted values (minimum value = 1) is returned by the test form of the command +CDEFMP. The provided media profile identification number is the number being returned by +CDEFMP when defining the media profile. Usage and value of a default media profile is implementation specific.

<ccidx>: integer type. Call identification number as described in 3GPP TS 22.030 [19] subclause 6.5.5.1. This number can be used in +CHLD command operations. Value range is from 1 to N. N, the maximum number of simultaneous call control processes is implementation specific.

Implementation

Optional.

13.2.3 Hangup of current calls +CHCCS

Table 13.2.3-1: +CHCCS action command syntax

Command	Possible response(s)
+CHCCS=<ccidx>[,<cause>]	+CME ERROR: <err> **when** <ccidx>=value>0 **is inserted and command successful:** [+CHCCSI: <ccidx>] **when** <ccidx>=0 **is inserted and command successful:** [+CHCCSI: <ccidx> [<CR><LF>+CHCCSI: <ccidx>] [...]]
+CHCS=?	

Description

Execution command causes the TA to initiate hangup and subsequently perform call clearing of the call for which a <ccidx> was provided when the call was detected in the MT. The parameter <cause> can be added to indicate particular information on the cause for call clearing. Setting the parameter <cause> to values 2 or 3 is typically relevant for call clearing before a call has been established (e.g. an incoming or waiting call). The parameter <cause> is ignored by the lower layers if it is not according to the signalling procedures in question.

A special form of the execution command, +CHCCS=0, causes the TA to initiate hangup and subsequently perform call clearing of all calls for which a <ccidx> was provided when the call was detected in the MT. The parameter <cause> will be ignored if <ccidx>=0.

The information text +CHCCSI: <ccidx> is provided for each call where a successful hangup is initiated as result of the +CHCCS. If no hangup is initiated, no information text is provided before OK is returned.

NOTE 1: The command +CHCCS=0 will initiate hangup of all calls with a <ccid>. This also applies to calls on hold and call waiting calls.

Refer subclause 9.2 for possible <err> values.

Defined values

<ccidx>: integer type. Call identification number as described in 3GPP TS 22.030 [19] subclause 6.5.5.1. This number can be used in +CHLD command operations. Value range is from 1 to N. N, the maximum number of simultaneous call control processes is implementation specific.

NOTE 2: When +CMCCS is supported, the call identification number is not reset until the unsolicited result code +CMCCSI has indicated that the <ccstatus>=1 (Idle).

<cause>: integer type. Proposed cause value for call clearing.

0 No particular cause indicated

1 Cause "Normal call clearing" (value 16), see 3GPP TS 24.008 [8] table 10.5.123 or BYE request, see RFC 3261 [111] subclause 15.1

2 Cause "Call rejected" (value 21), see 3GPP TS 24.008 [8] table 10.5.123 or "488 Not Acceptable Here", see RFC 3261 [111] subclause 21.4.26

3 Cause "User busy" (value 17), see 3GPP TS 24.008 [8] table 10.5.123 or "486 Busy Here", see RFC 3261 [111] subclause 21.4.24

Implementation

Mandatory when +CDU is implemented in the TA.

13.2.4 Define media profile +CDEFMP

Table 13.2.4-1: +CDEFMP parameter command syntax

Command	Possible response(s)
+CDEFMP=[<mpidx>][,<SDP_md>]	*+CME ERROR: <err>* **When no <mpidx> but <SDP_md> provided and command successful:** [+CDEFMP: <mpidx>]
+CDEFMP?	[+CDEFMP: <mpidx>,<SDP_md> [<CR><LF>+CDEFMP: <mpidx>,<SDP_md> [...]]]
+CDEFMP=?	+CDEFMP: (range of supported <mpidx>s)

Description

A media profile is identified by its media profile identification number. A media profile defines an SDP media description to be used in SDP offers and SDP answers. Media profiles can be used with +CDU and +CDUP when dialling URIs.

The set command specifies the SDP media description for a media profile identified by the (local) media profile identification number, <mpidx>. When no <mpidx> value is provided then a new SDP media description is defined and the media profile's identification number is returned by the command's response. When an <mpidx> value is provided, the definition of the SDP media description identified by the media profile identification number <mpidx> is replaced with the SDP media description provided by the command.

A special form of the set command, +CDEFMP=<mpidx> causes the SDP media description for the indicated media profile to become undefined. Further, +CDEFMP= causes the SDP media description for all defined media profiles to become undefined.

The read command returns a list of all defined media profiles.

The test command returns values supported as a compound value.

Refer subclause 9.2 for possible <err> values.

Defined values

<mpidx>: integer type. Media profile identification number. The parameter is local to the TE-MT interface. The range of permitted values (minimum value = 1) is returned by the test form of the command. The MT shall use the indicated SDP media description for the <mpidx> in the initial SDP offer for a call setup.

<SDP_md>: string type represented with IRA characters. SDP media description including media level SDP lines. This parameter shall not be subject to conventional character conversion as per +CSCS.

This parameter can contain the following types of SDP lines: SDP m-lines, SDP a-lines and partial SDP m-lines.

The communication client in the MT shall take into account SDP a-line rtpmap and fmtp attributes when negotiating media. Which other attributes in media level SDP a-lines are taken into account by the communication client is implementation specific.

Partial SDP m-lines include nothing but a media type.

For every media either an SDP m-line or a partial SDP m-line must be provided.

SDP m-lines indicate that the described media is encoded/decoded outside the MT.

Partial SDP m-lines indicate that the described media is encoded/decoded by the MT. When negotiating media the MT adds payload information to the partial SDP m-line.

The communication client in the MT shall use the provided SDP line information when negotiating media. The communication client shall add other SDP lines required for negotiating media.

Example: +CDEFMP=,"m=audio%x0D%x0Am=video 98%x0D%x0Aa=rtpmap:98 L16/16000/2"

Implementation

Optional.

13.2.5 Control and modify media description +CCMMD

Table 13.2.5-1: +CCMMD parameter command syntax

Command	Possible response(s)
+CCMMD=<ccid*x*>,<neg_status>[,<SDP_md>]	
+CCMMD?	
+CCMMD=?	

Description

This command allows control of the media used in a multimedia call. The command can be used to initiate modification of the media of an ongoing call, to accept / reject incoming changes in media or to accept / reject the media for an incoming call.

When <ccid*x*> matches the index of an ongoing call, the TA/MT will attempt to add or remove media to the call by triggering an SDP renegotiation over the SIP protocol.

When <neg_status>=1, the set command requests an unconditional change the media of the call to that described by <SDP_md>.

When <neg_status>=2, the set command proposes a change of media to that described by <SDP_md>, to which the remote party has to respond before the media of the call is changed. The response from the remote party will be indicated in a +CMCCSI unsolicited result code. If the remote party accepts the change of media, the <neg_status> value in +CMCCSI will be set to 3. If the remote party rejects the change of media, <neg_status> will be set to 4. In both cases the <SDP_md> value in +CMCCSI will describe the currently active media of the call (if any).

If the remote party unconditionally changes the media of the call, this will be indicated in a +CMCCSI unsolicited result code, with <neg_status>=1 and <SDP_md> containing the updated (and now active) media description.

If the remote party proposes to change the media of an ongoing call, this will be indicated in a +CMCCSI unsolicited result code, with <neg_status>=2. The set command should be used to respond to the proposal, either accepting it by setting <neg_status>=3, or rejecting it by setting <neg_status>=4.

When the MT receives an incoming call from a remote party, the +CMCCSI unsolicited result code will be sent to the TE with <neg_status>=2. This proposed media for the new call should either be accepted, (as described above) or it should be rejected and a new media should be proposed using the set command with <neg_status>=2.

Defined values

<ccid*x*>: integer type. Call identification number as defined in the +CMCCS and +CLCCS commands.

<neg_status>: integer type

1 The <SDP_md> parameter describes the desired set of media for the call.

2 The <SDP_md> parameter describes a proposal for a new set of media for the call.

3 Accept the most recently received media proposal. The <SDP_md> parameter describes the accepted media for the call.

4 Reject the most recently received media proposal.

<SDP_md>: string type represented with IRA characters. Media description as per the +CDEFMP command. This parameter shall not be subject to conventional character conversion as per +CSCS.

Implementation

Optional.

13.3 Informative examples

Below is an example where a voice call originated with +CDU is placed to a tel-URI. This example outlines how the call is initiated by the AT command +CDU, and how the unsolicited result code +CDUU is used to indicate how the call-setup progress until it is terminated. Both successful and unsuccessful outcome of a call attempt is shown in the example.

```
AT+CDU=1,"tel:+47-123-45678"          (Voice call initiated)
+CDU: 2                               (Call initiated, call identification number 2 provided)
OK                                    (Call initiation successful)

                                      (Call setup progress, unsolicited result codes appear as appropriate)

                                      (If call is answered by the remote party)
+CDUU: 2,"ANSWERED"                   (Remote party has answered)

                                      (If remote party does not answer)
+CDUU: 2,"NO ANSWER"                  (Connection completion timeout)

                                      (If remote party is busy)
+CDUU: 2,"BUSY"                       (Busy signal detected)

                                      (If call is terminated from remote party)
+CDUU: 2,"CONNECTION TERMINATED"      (Connection terminated from remote party)

                                      (If call is terminated from calling party)
AT+CHCCS=2                            (Connection with call identification number 2 terminated from calling party)
+CHCCSI: 2
OK
```

Below is an example where a multimedia-call (voice) originated with +CDU is placed to a SIP-URI. This example outlines how the call is initiated by the AT command +CDU, and how the unsolicited result codes +CDUU and +CMCCSI are used to indicate how the call-setup progress until it is terminated. A precondition for this example is that the basic event for the call monitoring function is successfully enabled with +CMCCS=2.

```
AT+CDU=1,"sip:veronica@university.org"                    (Multimedia-call (voice) initiated)
+CDU: 4                                                   (Call initiated, call identification number 4 provided)
OK                                                        (Call initiation successful)

                                                          (+CDUU and +CMCCSI appear as appropriate)

+CMCCSI: 4,0,0,0,"",0,2,0,1,0,"sip:veronica@university.org",0,0      (Call setup is started)
+CMCCSI: 4,0,0,0,"",0,3,0,1,0,"sip:veronica@university.org",0,0      (Call is in progress)
+CMCCSI: 4,0,0,0,"",0,4,0,1,0,"sip:veronica@university.org",0,0      (Alert indication received)

CDUU: 4,"ANSWERED"                                        (Remote party answered)
```

```
+CMCCSI: 4,0,0,0,"",0,6,0,1,0,"sip:veronica@university.org",0,0      (Connection established)

AT+CHCCS=4                                                           (Connection with call identification number 4 terminated)
+CHCCSI: 4
OK

+CMCCSI: 4,0,0,0,"",0,7,0,1,0,"sip:veronica@university.org",2,200    (Outgoing connection released)
+CMCCSI: 4,0,0,0,"",0,0,0,1,0,"sip:veronica@university.org",0,0      (Idle)
```

Below is an example where a multimedia-call originated with +CDU is placed to a SIP-URI. This example outlines how the call is initiated by the AT command +CDU, and how the unsolicited result codes +CDUU and +CMCCSI are used to indicate how the call-setup progresses until it is terminated. A precondition for this example is that the basic event for the call monitoring function is successfully enabled with +CMCCS=2. This example illustrates the use of the +CDEFMP and +CCMMD commands to define and control the types of media that are used in the call. The terms "<Audio>" and "<Audio+video>" are used to illustrate respective SDP media descriptions of audio and audio+video in the example.

```
AT+CDEFMP=,"<Audio>"                                                 (Media profile defined, offering only audio)
+CDEFMP=3                                                            (Media profile index number 3 provided)
OK

AT+CDU=1,"sip:veronica@university.org",1,3                           (Multimedia-call initiated, using media profile number 3)
+CDU: 5                                                              (Call initiated, call identification number 5 provided)
OK                                                                   (Call initiation successful)

                                                                     (+CDUU and +CMCCSI appear as appropriate)

+CMCCSI: 5,0,0,0,"",0,2,0,1,0,"sip:veronica@university.org",0,0      (Call setup is started)

+CMCCSI: 5,0,0,0,"",0,3,0,1,0,"sip:veronica@university.org",0,0      (Call is in progress)
+CMCCSI: 5,0,0,0,"",0,4,0,1,0,"sip:veronica@university.org",0,0      (Alert indication received)

+CMCCSI: 5,0,1,3,"<Audio>",0,4,0,1,0,"sip:veronica@university.org",0,0
                                                                     (Remote party accepted the proposal for audio media)

+CDUU: 5,"ANSWERED"                                                  (Remote party answered)

+CMCCSI: 5,0,1,1,"<Audio>",0,6,0,1,0,"sip:veronica@university.org",0,0
                                                                     (Connection established, audio media is active)

+CMCCSI: 5,0,1,2,"<Audio+video>",0,6,0,1,0,"sip:veronica@university.org",0,0
                                                                     (Remote party proposed adding video to the call)

AT+CCMDC=5,3,"<Audio+video>"                                         (Proposal accepted)
OK
+CMCCSI: 5,0,1,1,"<Audio+video>",0,6,0,1,0,"sip:veronica@university.org",0,0
                                                                     (Call media changed to audio and video)

AT+CCMDC=5,1,"<Audio>"                                               (Video media removed, unconditionally)
OK
+CMCCSI: 5,0,1,1,"<Audio>",0,6,0,1,0,"sip:veronica@university.org",0,0
                                                                     (Call media changed to audio only)

AT+CHCCS=5                                                           (Connection with call identification number 5 terminated)
+CHCCSI: 5
OK

+CMCCSI: 5,0,0,0,"",0,7,0,1,0,"sip:veronica@university.org",2,200    (Outgoing connection released)

+CMCCSI: 5,0,0,0,"",0,1,0,1,0,"sip:veronica@university.org",0,0      (Idle)
```

Below is an example where a multimedia-call originated with +CDU is placed to a SIP-URI. In this example, the remote party rejects the proposed media and makes a counterproposal, which is then accepted by the originating party before the call is established. A precondition for this example is that the basic event for the call monitoring function is successfully enabled with +CMCCS=2. The terms "<Audio>" and "<Audio+video>" are used to illustrate respective SDP media descriptions of audio and audio+video in the example.

```
AT+CDEFMP=,"<Audio+video>"                                           (Media profile defined, offering both audio and video)
+CDEFMP=4                                                            (Media profile index number 4 provided)
OK
AT+CDU=1,"sip:veronica@university.org",1,4                           (Multimedia-call initiated, using media profile number 4)
```

```
+CDU: 6                                                    (Call initiated, call identification number 6 provided)
OK                                                         (Call initiation successful)

                                                           (+CDUU and +CMCCSI appear as appropriate)

+CMCCSI: 6,0,0,0,"",0,2,0,1,0,"sip:veronica@university.org",0,0      (Call setup is started)
+CMCCSI: 6,0,0,0,"",0,3,0,1,0,"sip:veronica@university.org",0,0      (Call is in progress)
+CMCCSI: 6,0,0,0,"",0,4,0,1,0,"sip:veronica@university.org",0,0      (Alert indication received)

+CMCCSI: 6,0,1,4,"",0,4,0,1,0,"sip:veronica@university.org",0,0
                                                           (Remote party rejected the proposal for audio+video media)

+CMCCSI: 6,0,1,2,"<Audio>",0,4,0,1,0,"sip:veronica@university.org",0,0
                                                           (Remote party proposed audio-only media for the call)

AT+CCMDC=6,3,"<Audio>"                                     (Proposal accepted)
OK

+CDUU: 6,"ANSWERED"                                        (Remote party answered the call)

+CMCCSI: 6,0,1,1,"<Audio>",0,6,0,1,0,"sip:veronica@university.org",0,0
                                                           (Connection established, audio media is active)
```

Below is the same scenario as above from the terminating party's perspective. An incoming multimedia-call is received, but the initially offered media is rejected and a successful counterproposal is made. A precondition for this example is that the basic event for the call monitoring function is successfully enabled with `+CMCCS=2`. The terms `"<Audio>"` and `"<Audio+video>"` are used to illustrate respective SDP media descriptions of audio and audio+video in the example.

```
RING                                                       (Ringing call)

+CMCCSI: 3,1,1,2,"<Audio+video>",0,5,0,1,0,"sip:archie@university.org",0,0
                                   (Incoming ringing call with call identification number 3 and a proposal for audio+video media)

AT+CCMDC=3,4                                               (Media proposal rejected)
OK

AT+CCMDC=3,2,"<Audio>"                                     (Audio-only media for the call proposed)
OK

+CMCCSI: 3,1,1,3,"<Audio>",0,5,0,1,0,"sip:archie@university.org",0,0
                                                   (Originating party accepted the proposed, and now active, audio media)

ATA                                                        (Call answered)
OK

+CMCCSI: 3,1,1,1,"<Audio>",0,6,0,1,0,"sip:archie@university.org",0,0      (Active call established with audio media)
```

Below is an example where a multimedia-call originated with `+CDU` is placed to a SIP-URI. In this example, both the proposed media and the call is rejected by the remote party. A precondition for this example is that the basic event for the call monitoring function is successfully enabled with `+CMCCS=2`. The term `"<Audio+video>"` is used to illustrate SDP media description of audio+video in the example.

```
AT+CDEFMP=,"<Audio+video>"                                 (Media profile defined, offering both audio and video)
+CDEFMP=5                                                  (Media profile index number 5 provided)
OK
AT+CDU=1,"sip:veronica@university.org",1,5                 (Multimedia-call initiated, using media profile number 5)
+CDU: 7                                                    (Call initiated, call identification number 7 provided)
OK                                                         (Call initiation successful)

                                                           (+CDUU and +CMCCSI appear as appropriate)

+CMCCSI: 7,0,0,0,"",0,2,0,1,0,"sip:veronica@university.org",0,0      (Call setup is started)
+CMCCSI: 7,0,0,0,"",0,3,0,1,0,"sip:veronica@university.org",0,0      (Call is in progress)
+CMCCSI: 7,0,0,0,"",0,4,0,1,0,"sip:veronica@university.org",0,0      (Alert indication received)

+CMCCSI: 7,0,1,4,"",0,4,0,1,0,"sip:veronica@university.org",0,0
                                                           (Remote party rejected the proposal for audio+video media)

+CDUU: 7,"CONNECTION TERMINATED"                           (Remote party rejected the call)

+CMCCSI: 7,0,0,0,"",0,7,0,1,0,"sip:veronica@university.org",2,488    (Outgoing connection released)
```

```
+CMCCSI: 7,0,0,0,"",0,1,0,1,0,"sip:veronica@university.org",0,0      (Idle)
```

Below is the same scenario as above from the terminating party's perspective. An incoming multimedia-call is received, but both the initially offered media and the call are rejected. A precondition for this example is that the basic event for the call monitoring function is successfully enabled with `+CMCCS=2`. The term `"<Audio+video>"` is used to illustrate SDP media description of audio+video in the example.

```
RING                                                                 (Ringing call)

+CMCCSI: 4,1,1,2,"<Audio+video>",0,5,0,1,0,"sip:archie@university.org",0,0
                                    (Incoming ringing call with call identification number 4 and a proposal for audio+video media)

AT+CCMDC=4,4                                                         (Media proposal rejected)
OK

AT+CHCCS=4,2                                                         (Connection with identification number 4 rejected)
+CHCCSI: 4
OK

+CMCCSI: 4,0,0,0,"",0,8,0,1,0,"sip:veronica@university.org",2,488    (Incoming connection released)

+CMCCSI: 4,0,0,0,"",0,1,0,1,0,"sip:veronica@university.org",0,0      (Idle)
```

Annex A (normative): Summary of commands from other standards

Summary of ITU-T Recommendation V.250 [14] commands applicable to GSM/UMTS:

Table A.1: V.250 commands applicable to GSM/UMTS

Name	V.250 subclause	Description	Subclauses in the present document
&C	6.2.8	Circuit 109 (Received line signal detector) Behaviour	4.3
&D	6.2.9	Circuit 108 (Data terminal ready) Behaviour	4.3
&F	6.1.2	Set to Factory-defined Configuration	5.8/ 3
+DR	6.6.2	Data Compression Reporting	6.20
+DS	6.6.1	Data Compression	6.20
+GCAP	6.1.9	Request Complete Capabilities List	5.8
+GCI	6.1.10	Country of Installation	5.8
+GMI	6.14	Request Manufacturer Identification	5.8/ 5.1
+GMM	6.1.5	Request Model Identification	5.8/ 5.2
+GMR	6.1.6	Request Revision Identification	5.8/ 5.3
+GOI	6.1.8	Request Global Object Identification	5.8
+GSN	6.1.7	Request Product Serial Number Identification	5.8/ 5.4
+ICF	6.2.11	DTE-DCE Character Framing	4.3
+IFC	6.2.12	DTE-DCE Local Flow Control	4.3
+ILRR	6.2.13	DTE-DCE Local Rate Reporting	4.3
+IPR	6.2.10	Fixed DTE Rate	4.3
A	6.3.5	Answer	6.19/ 6.6
D	6.3.1	Dial	6.1-6.4/ 6.6
E	6.2.4	Command Echo	4.3
H	6.3.6	Hook Control	6.19/ 6.5/ 6.6
I	6.1.3	Request Identification Information	5.8
L	6.3.13	Monitor Speaker Loudness	6.19
M	6.3.14	Monitor Speaker Mode	6.19
O	6.3.7	Return to Online Data State	6.19
P	6.3.3	Select Pulse Dialling	6.19
Q	6.2.5	Result Code Suppression	4.3
S0	6.3.8	Automatic Answer	6.19
S10	6.3.12	Automatic Disconnect Delay	6.19
S3	6.2.1	Command Line Termination Character	4.3
S4	6.2.2	Response Formatting Character	4.3
S5	6.2.3	Command Line Editing Character	4.3
S6	6.3.9	Pause Before Blind Dialling	6.19
S7	6.3.10	Connection Completion Timeout	6.19
S8	6.3.11	Comma Dial Modifier Time	6.19
T	6.3.2	Select Tone Dialling	6.19
V	6.2.6	DCE Response Format	4.3/ 3/ 4.1/ 4.2
X	6.2.7	Result Code Selection and Call Progress Monitoring Control	4.3
Z	6.1.1	Reset To Default Configuration	5.8

The use of ITU-T Recommendation V.42 error control protocol is not specified for GSM/UMTS, but if a manufacturer chooses to implement it over transparent data service, +E prefixed commands of ITU-T Recommendation V.250 [14] shall be used.

ITU-T Recommendation T.31 [11] and ITU-T Recommendation T.32 [12] may be used as facsimile TA-TE protocols without deletions or additions to the command set.

TIA IS-99 [15] commands referenced in the present document:

Table A.2: TIA IS-99 commands in the present document

Command	IS-99 subclause	Description	Subclause in the present document
+CBC	5.6.5	Battery Charge	8.4
+CGMI	5.6.10	Request Manufacturer Identification	5.1
+CGMM	5.6.10	Request Model Identification	5.2
+CGMR	5.6.10	Request Revision Identification	5.3
+CGSN	5.6.10	Request Product Serial Number Identification	5.4
+CRC	5.6.7	Cellular Result Codes	6.11

TIA IS-135 [16] commands referenced in the present document:

Table A.3: TIA IS-135 commands in the present document

Command	IS-135 subclause	Description	Subclause in the present document
+CBC	4.1.24	Battery Charge	8.4
+CRC	4.1.29	Cellular Result Codes	6.11
+CSQ	4.1.31	Signal Quality	8.5

PCCA STD-101 [17] commands referenced in the present document:

Table A.4: PCCA STD-101 commands in the present document

Command	STD-101 subclause	Description	Subclause in the present document
+WS46	5.2.4.6	WDS-side Stack Selection	5.9

Annex B (normative): Summary of result codes

ITU-T Recommendation V.250 [14] result codes which can be used in GSM/UMTS and result codes defined in the present document:

Table B.1: Result codes

Verbose result code (V.250 command V1 set)	Numeric (V0 set)	Type	Description
+CACSP	as verbose	unsolicited	refer subclause 11.1.7
+CALV	as verbose	unsolicited	refer subclause 8.16
+CANCHEV	as verbose	unsolicited	refer subclause 11.1.8
+CAPTT	as verbose	unsolicited	refer subclause 11.1.4
+CAULEV	as verbose	unsolicited	refer subclause 11.1.5
+CBCAP	as verbose	unsolicited	refer subclause 8.59
+CBCHG	as verbose	unsolicited	refer subclause 8.61
+CBCON	as verbose	unsolicited	refer subclause 8.60
+CCCM	as verbose	unsolicited	refer subclause 7.16
+CCFCUN	as verbose	Unsolicited	refer subclause 7.35
+CCWA	as verbose	unsolicited	refer subclause 7.12
+CCWV	as verbose	unsolicited	refer subclause 8.28
+CDEV	as verbose	unsolicited	refer subclause 8.10
+CDIP	as verbose	unsolicited	refer subclause 7.9
+CDUU	as verbose	unsolicited	refer subclause 13.2.1
+CEPTT	as verbose	unsolicited	refer subclause 11.1.10
+CEREG	as verbose	unsolicited	refer subclause 10.1.22
+CPNERU	as verbose	unsolicited	refer subclause 8.70
+CGDEL	as verbose	intermediate	refer subclause 10.1.29
+CGEV	as verbose	unsolicited	refer subclause 10.1.19
+CGREG	as verbose	unsolicited	refer subclause 10.1.20
+CHSR	as verbose	intermediate	refer subclause 6.16
+CIEV	as verbose	unsolicited	refer subclause 8.10
+CIREGU	as verbose	unsolicited	refer subclause 8.71
+CIREPH	as verbose	unsolicited	refer subclause 8.64
+CIREPI	as verbose	unsolicited	refer subclause 8.64
+CKEV	as verbose	unsolicited	refer subclause 8.10
+CLAV	as verbose	unsolicited	refer subclause 8.31
+CLIP	as verbose	unsolicited	refer subclause 7.6
+CMCCSI	as verbose	unsolicited	refer subclause 7.73
+CMCCSS<x>	as verbose	unsolicited	refer subclause 7.74
+CMCCSSEND	as verbose	unsolicited	refer subclause 7.74
+CME ERROR	as verbose	final	refer subclause 9.2.0
+CMOLRE	as verbose	unsolicited	refer subclause 9.3.1
+CMOLRG	as verbose	unsolicited	refer subclause 8.50
+CMOLRN	as verbose	unsolicited	refer subclause 8.50
+CMTLR	as verbose	unsolicited	refer subclause 8.57
+CNAP	as verbose	intermediate unsolicited	refer subclause 7.30
+CNEMIU	as verbose	unsolicited	refer subclause 7.33
+CNEMS1	as verbose	unsolicited	refer subclause 7.33
+COEV	as verbose	unsolicited	refer subclause 8.10
+COLP	as verbose	intermediate	refer subclause 7.8

		unsolicited	
+CPOSR	as verbose	unsolicited	refer subclause 8.56
+CPNSTAT	as verbose	unsolicited	refer subclause 7.28
+CPSB	as verbose	unsolicited	refer subclause 7.29
+CR	as verbose	intermediate	refer subclause 6.9
+CREG	as verbose	unsolicited	refer subclause 7.2
+CRING	as verbose	unsolicited	refer subclause 6.11
+CSCON	as verbose	unsolicited	refer subclause 10.1.30
+CSSI	as verbose	intermediate	refer subclause 7.17
+CSSU	as verbose	unsolicited	refer subclause 7.17
+CTEV	as verbose	unsolicited	refer subclause 8.10
+CTZE	as verbose	unsolicited	refer subclause 8.41
+CTZV	as verbose	unsolicited	refer subclause 8.41
+CUSATEND	as verbose	unsolicited	refer subclause 12.2.4
+CUSATP	as verbose	unsolicited	refer subclause 12.2.4
+CUSATS	as verbose	unsolicited	refer subclause 12.2.3
+CUSD	as verbose	unsolicited	refer subclause 7.15
+CUUS1I	as verbose	intermediate	refer subclause 7.26
+CUUS1U	as verbose	unsolicited	refer subclause 7.26
+DR	as verbose	intermediate	refer subclause 6.26
+ILRR	as verbose	intermediate	refer subclause 4.3
BUSY	7	final	busy signal detected
CONNECT	1	intermediate	connection has been established
CONNECT <text>	manufacturer specific	intermediate	as CONNECT but manufacturer specific <text> gives additional information (e.g. connection data rate)
ERROR	4	final	command not accepted
NO ANSWER	8	final	connection completion timeout
NO CARRIER	3	final	connection terminated
NO DIALTONE	6	final	no dialtone detected
OK	0	final	acknowledges execution of a command line
RING	2	unsolicited	incoming call signal from network
NOTE: From v6.2.0 onwards, ATV0 numeric result codes 5, 6, 7 for NO DIALTONE, BUSY and NO ANSWER respectively, have been replaced by numeric result codes 6, 7, 8 respectively, to be aligned with the values listed in ITU-T Recommendation V.250 [14] (previously V.25ter).			

NOTE: The table B.1 is as an overview of the result codes, hence the complete syntax of the result codes is not shown.

Annex C (informative): Commands from TIA IS-101

C.1 Introduction

The "Voice Control Interim Standard for Asynchronous DCE", TIA IS-101, contains some commands that are useful when passing audio "data" (that is, data which represents audio information) between the computer and the TA.

Some of the following subclauses describe commands from IS-101 which are central to this TA application. However, with the exception of necessary extensions, these descriptions are not intended to replace the definitions found in IS-101. Other novel commands from the interim standard are not included because they are peripheral to TA operation.

NOTE 1: IS-101 also uses ITU-T Recommendation V.250 [14] AT commands, but these are not mentioned here.

The standard specifies the following modes:

- command mode, where there is no transfer of audio "data" between the TA and the computer. In command mode, the computer is neither sending audio data to the TA nor receiving audio data from the TA.
- transmit mode, where audio "data" is being transferred from the computer to the TA. No audio "data" is transferred from the TA to the computer in this state. A transition back to command mode occurs when an embedded command indicates "end of play" or "flush data", or an inactivity timer times out.
- receive mode, where audio "data" is being transferred from the TA to the computer. No audio "data" is transferred from the computer to the TA in this state. A transition back to command mode occurs when any command is sent from the computer, or an inactivity timer times out. During the receive mode, the TA embeds result codes into the audio "data". These result codes indicate pertanent events such as "silence detected", "busy detected", and so on.

Strictly, the standard specifies another mode (translation), but this is not directly of interest here.

NOTE 2: The TA "knows" the type of an incoming call (whether it is voice, data, fax, whatever), and certain POTS events cannot occur. Hence some standard result codes for indication of events and discrimination of call type are unnecessary.

There are three possible levels of service:

- a TA supporting level A performs the following operations and detects the following events: audio transmit, audio receive, DTMF detection, DTMF generation and single tone generation. The following indications are supported:

Event	Description	Handset state
3	ring	idle
4	DTMF received	idle
5	receive buffer overrun	receive
6	unsolicited fax request	idle
8	phone on/off hook	idle
9	presumed hangup	receive
10	presumed end of message	receive
18	ringback	idle
19	busy	idle
23	playback buffer underrun	transmit

25 fax or data request acknowledged idle

- a TA supporting level B performs the operations and events of level A, and also supports DTMF detection while in the transmit state.
- a TA supporting level C performs the operations and events of level B, and also supports double DTMF tone generation.

Since DTMF detection and generation cannot be guaranteed over current digital networks, it follows that none of the three levels of service can be supported.

C.2 Commands

C.2.1 Select mode +FCLASS

This command puts the TA into a particular mode of operation (data, fax, voice etc.). This causes the TA to process information in a manner suitable for that type of information (rather than for other types of information). The values and meanings of parameter <n> are specified in the following table.

<n>	Mode
0	data
1	fax class 1 (TIA-578-A)
1.0	fax class 1 (ITU-T Recommendation T.31 [11])
2	fax (manufacturer specific)
2.0	fax class 2 (ITU-T Recommendation T.32 [12] and TIA-592)
3...7	reserved for other fax modes
8	voice
9...15	reserved for other voice modes
16..79	reserved
80	VoiceView (Radish)
81..255	reserved

Table C.1: +FCLASS parameter command syntax

Command	Return
+FCLASS=<n>	
+FCLASS?	<n>
+FCLASS=?	(list of supported <n>s)

Voice mode is of particular interest here, and has an additional result code +VCON. Specifically, +VCON indicates that the TA is entering the voice command mode and there is a voice connection to at least one audio input or output. This presupposes that some mechanism has previously initiated a connection to that audio I/O.

C.2.2 Buffer threshold setting +VBT

This refers to integers <lo> and <hi> that indicate levels within the TA transmit buffer at which flow control is asserted and deasserted. The buffer is used for averaging out the irregular timing of data from the computer, so that the data becomes synchronous and may be sent to some audio device.

Table C.2: +VBT parameter command syntax

Command	Return
+VBT=<lo>,<hi>	
+VBT?	<lo>,<hi>
+VBT=?	(list of supported <lo>s),(list of supported <hi>s),(buffer size)

C.2.3 Calling number ID presentation +VCID

The command refers to an integer that allows a called party to enable or disable (<n>=0) the reporting of the ID of calling parties, and specifies the method of presentation of the ID. This is basically the same as GSM/UMTS supplementary service CLIP (Calling Line Identification Presentation). The presentation may be either formatted (<n>=1) or unformatted (<n>=2):

- Formatted presentation: data items are reported in the form of <tag>=<value> pairs.

<tag>	<value>
DATE	MMDD (month, day)
TIME	HHMM (hour, minute)
NMBR	calling number or P or O (P = number is private, O = number is unavailable)
NAME	subscription listing name
MESG	data from other (unknown) tags

- Unformatted presentation: the data is presented in ASCII hex as printable numbers.

Table C.3: +VCID parameter command syntax

Command	Return
+VCID=<n>	
+VCID?	<n>
+VCID=?	(0-2)

C.2.4 Receive gain selection +VGR

This refers to the amplification by the TA of audio samples sent from the TA to the computer. The command operates on an integer <n>, range 0...255. Values larger than 128 indicate a larger gain than nominal. Values less than 128 indicate a smaller gain than nominal. The entire range of 0...255 does not have to be provided. A value of zero implies the use of automatic gain control by the TA.

Table C.4: +VGR parameter command syntax

Command	Return
+VGR=<n>	
+VGR?	<n>
+VGR=?	(list of supported <n>s)

C.2.5 Transmit gain selection +VGT

This refers to the amplification by the TA of audio samples sent from the computer to the TA. The command operates on an integer <n>, range 0...255. Values larger than 128 indicate a larger gain than nominal. Values less than 128

indicate a smaller gain than nominal. The entire range of 0...255 does not have to be provided. A value of zero implies the uses of automatic gain control by the TA.

Table C.5: +VGT parameter command syntax

Command	Return
+VGT=<n>	
+VGT?	<n>
+VGT=?	(list of supported <n>s)

C.2.6 Initialise voice parameters +VIP

This recalls manufacturer determined settings <n> of voice parameters. The command is write only. The effect of the command is manufacturer specific.

Table C.6: +VIP action command syntax

Command	Return
+VIP=<n>	
+VIP=?	(list of supported <n>s)

C.2.7 Inactivity timer +VIT

This refers to the value of the inactivity timer in the TA. It is used to monitor activity on the connection between the computer and the TA when the computer is in "transmit" mode and sending audio data to the TA. When the connection has been inactive for the time set by this command, the TA leaves "transmit" mode and reverts to command mode. An integer <n> different than zero implies a time of <n>/10 seconds. A value of zero disables the timer.

Table C.7: +VIT parameter command syntax

Command	Return
+VIT=<n>	
+VIT?	<n>
+VIT=?	(list of supported <n>s)

C.2.8 Line selection +VLS

This determines the selection of sources and destinations of audio samples. An integer is used to label a particular combination of sources and destinations. The integer is defined in an entry in IS-101 which assumes as a model a TA, a local phone and a phone line. Two additional "manufacturer specific" configurations (16,17) are defined.

- label=0: this is the idle state - the phone is not connected to the radio network and no audio paths are used.
- label=1: the phone is connected to the radio network and no audio paths involving the internal microphone or internal loudspeaker are selected. This allows the computer to transmit audio data over the radio transmitter by selecting "transmit mode":

Table C.8: +VLS label 1a

	loudspeaker	computer i/p	transmit stage
microphone -->			
computer o/p -->			*
receiver stage -->			

This also allows the computer to receive audio data from the radio receiver by selecting "receive mode":

Table C.9: +VLS label 1b

	loudspeaker	computer i/p	transmit stage
microphone -->			
computer o/p -->			
receiver stage -->		*	

- label=4: the phone is not connected to the radio network but there is an audio path to the internal speaker. This allows the computer to play sound by selecting "transmit mode".

Table C.10: +VLS label 4

	loudspeaker	computer i/p	transmit stage
microphone -->			
computer o/p -->	*		
receiver stage -->			

- label=6: the phone is not connected to the radio network but there is an audio path to the internal microphone. This allows the computer to record sound by selecting "receive mode".

Table C.11: +VLS label 6

	loudspeaker	computer i/p	transmit stage
microphone -->		*	
computer o/p -->			
receiver stage -->			

- label=7: the phone is connected to the radio network. The internal microphone is connected to the radio transmitter. The radio receiver is connected to the internal loudspeaker. This allows the computer to enable normal phone operation (a human holding a conversation) by selecting command mode.

Table C.12: +VLS label 7

	loudspeaker	computer i/p	transmit stage
microphone -->			*
computer o/p -->			
receiver stage -->	*		

Table C.13: +VLS parameter command syntax

Command	Return
+VLS=<n>	+VCON
+VLS?	<n>
+VLS=?	*complex; refer IS-101*

+VCON is returned if an audio path is established or if a connection is made to the radio network.

Manufacturer specific extension (reserved as such by IS-101)

- label=16: the phone is connected to the radio network. There is a path to the internal microphone, which is also connected to the radio transmitter. There is a path to the radio receiver, which is also connected to the internal loudspeaker. This allows the computer to record the sum of transmitted and received audio by selecting "receive mode".

Table C.14: +VLS label 16

	loudspeaker	computer i/p	transmit stage
microphone -->		*	*
computer o/p -->			
receiver stage -->	*	*	

- label=17: the phone is connected to the radio system and there is a path to the internal loudspeaker and to the radio transmitter. This allows the computer to simultaneously play sound and send audio over the radio by selecting "transmit mode".

Table C.15: +VLS label 17

	loudspeaker	computer i/p	transmit stage
microphone -->			
computer o/p -->	*		*
receiver stage -->			

C.2.9 Receive data state +VRX

This action command causes the TA to get audio data from a source determined by the `+VLS` command, and send it to the computer. Once the datastream has started, any result codes will be embedded in the data and shielded using the normal `<DLE>` methods. The receive process is terminated when the computer sends any command to the TA, or by time-out of the inactivity timer. The command is write only.

Table C.16: +VRX action command syntax

Command	Return
`+VRX`	`CONNECT`

C.2.10 Select compression method +VSM

This selects the voice compression method `<n1>`, the voice sampling rate `<n2>`, the silence compression sensitivity `<n3>`, and a parameter related to silence expansion `<n4>`. There are several choices of compression method. IS-101 does not specify methods, but here is a list of some usual compression methods:

Name	Communications system
GSM/full-rate	GSM
GSM/half-rate	GSM
ADPCM/G.721	DECT, CT2
ADPCM/G.723	DECT, CT2
ADPCM/G.726	DECT, CT2
ADPCM/G.727	DECT, CT2
SIGNED PCM	POTS

Table C.17: +VSM parameter command syntax

Command	Return
`+VSM=<n1>,<n2>,<n3>,<n4>`	
`+VSM?`	`<n1>,<n2>,<n3>,<n4>`
`+VSM=?`	*complex; refer IS-101*

NOTE: A value of <n3>=0 implies no silence compression sensitivity. A value of <n4>=0 implies no silence expansion.

C.2.11 DTMF and tone generation +VTS

This command allows the transmission of DTMF tones and arbitrary tones (see NOTE 1). These tones may be used (for example) when announcing the start of a recording period. The command is write only. In this profile of commands, this command does not operate in data or fax modes of operation (+FCLASS=0,1,2-7).

NOTE 1: D is used only for dialling.

The string parameter of the command consists of combinations of the following separated by commas:

1. <DTMF>. A single ASCII character in the set 0-9, #,*,A-D. This is interpreted as a single ACSII character whose duration is set by the +VTD command.

NOTE 2: In GSM this operates only in voice mode.

2. [<tone1>,<tone2>,<duration>]. This is interpreted as a dual tone of frequencies <tone1> and <tone2>, lasting for a time <duration> (in 10 ms multiples).

NOTE 3: This does not operate in GSM.

3. {<DTMF>,<duration>}. This is interpreted as a DTMF tone of different duration from that mandated by the +VTD command.

NOTE 4: In GSM this operates only in voice mode.

Table C.18: +VTS action command syntax

Command	Return
+VTS=*as above*	
+VTS=?	(list of supported <tone1>s),(list of supported <tone2>s),(list of supported <duration>s)

C.2.12 Tone duration +VTD

This refers to an integer <n> that defines the length of tones emitted as a result of the +VTS command. This does not affect the D command. A value different than zero causes a tone of duration <n>/10 seconds. The value zero causes a "manufacturer specific" value.

Table C.19: +VTD parameter command syntax

Command	Return
+VTD=<n>	
+VTD?	<n>
+VTD=?	(list of supported <n>s)

NOTE: In GSM/UMTS the value of tone duration is preset and cannot be altered.

C.2.13 Transmit data state +VTX

This action command causes the TA to receive audio data from the computer and send it to a destination determined by the +VLS command. Once the audio datastream has started, commands to the TA shall be embedded in the data stream, and shielded using the normal <DLE> methods. The transmit process is terminated by the use of embedded commands or by the time-out of an inactivity timer. It is recommended that the TA has a buffer to allow the TA to convert potentially bursty data from the computer into synchronous data for "transmission". The command is write only.

Table C.20: +VTX action command syntax

Command	Return
+VTX	CONNECT

Annex D (informative): Bibliography

Informative references:

1) IrDA Serial Infrared Physical Layer Specification.

IrDA Serial Infrared MAC and Link Protocol.

IrDA Serial Infrared Link Access Protocol.

2) PCCA STD-101 Annex I: Data Transmission Systems and Equipment - Serial Asynchronous Automatic Dialling and Control for Character Mode DCE on Wireless Data Services - Annex I: Command Extensions for Analog Cellular Data Modems.

3) TIA IS-101 Facsimile Digital Interfaces - Voice Control Interim Standard for Asynchronous DCE.

4) TIA-578-A Facsimile Digital Interfaces - Asynchronous Facsimile DCE Control Standard, Service Class 1.

5) TIA-592 Facsimile Digital Interfaces - Asynchronous Facsimile DCE Control Standard, Service Class 2.

6) TIA-617 Data Transmission Systems and Equipment - In-Band DCE Control.

7) ITU-T Recommendation V.80: In-band DCE control and synchronous data modes for asynchronous DTE.

Annex E (informative): Mobile originated alternating voice/data call example

Figure E.1 illustrates the possible transitions in MO BS 61 call. Responses and result codes generated by TA are in bold face. In this example, data part of the call is asynchronous non-transparent 9600 bps service.

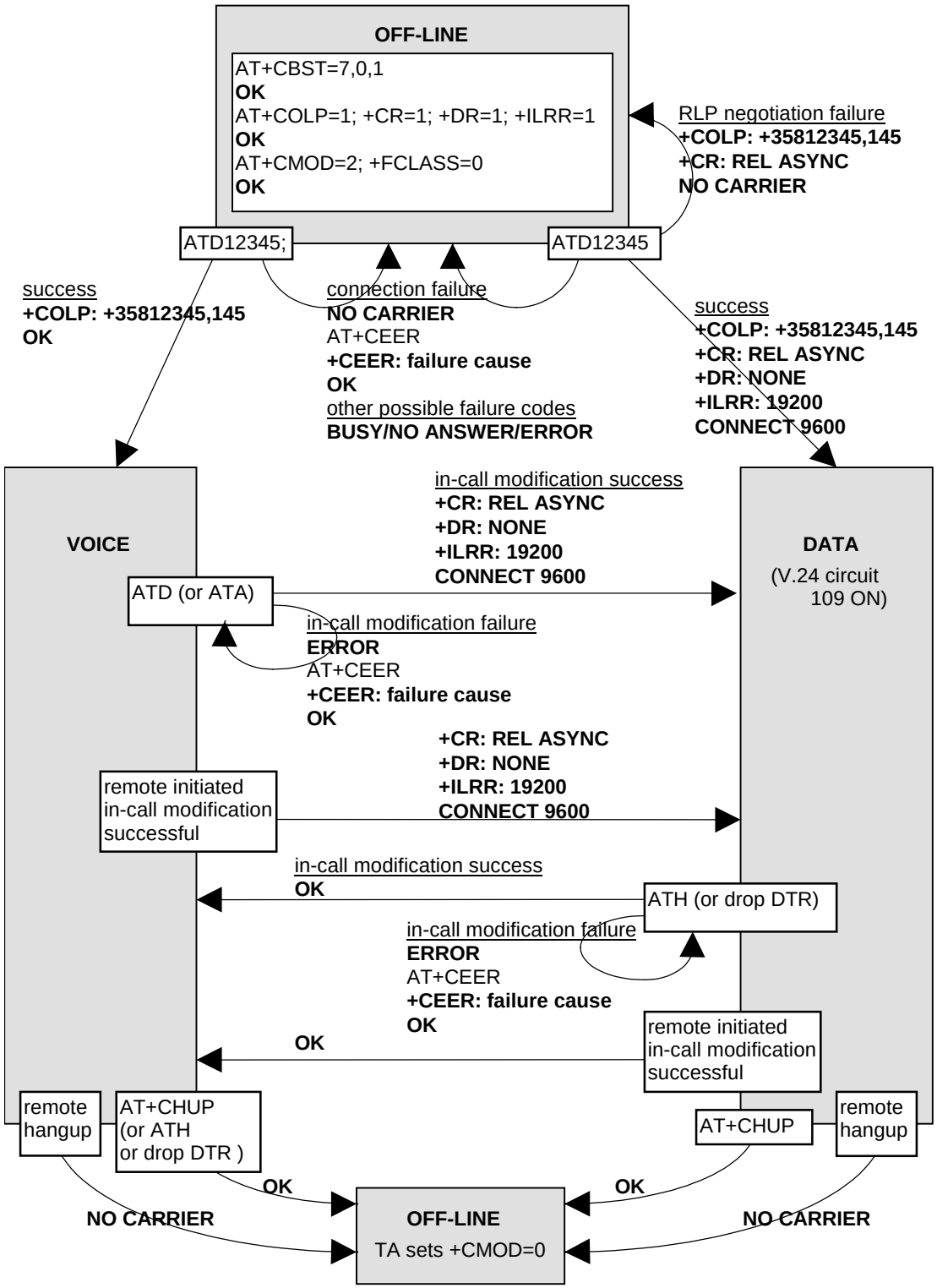

Figure E.1: MO BS 61 call

Annex F (informative): Mobile terminated voice followed by data call example

Figure F.1 illustrates the possible transitions in MT BS 81 call. Responses and result codes generated by TA are in bold face. In this example, data part of the call is asynchronous non-transparent 9600 bps service.

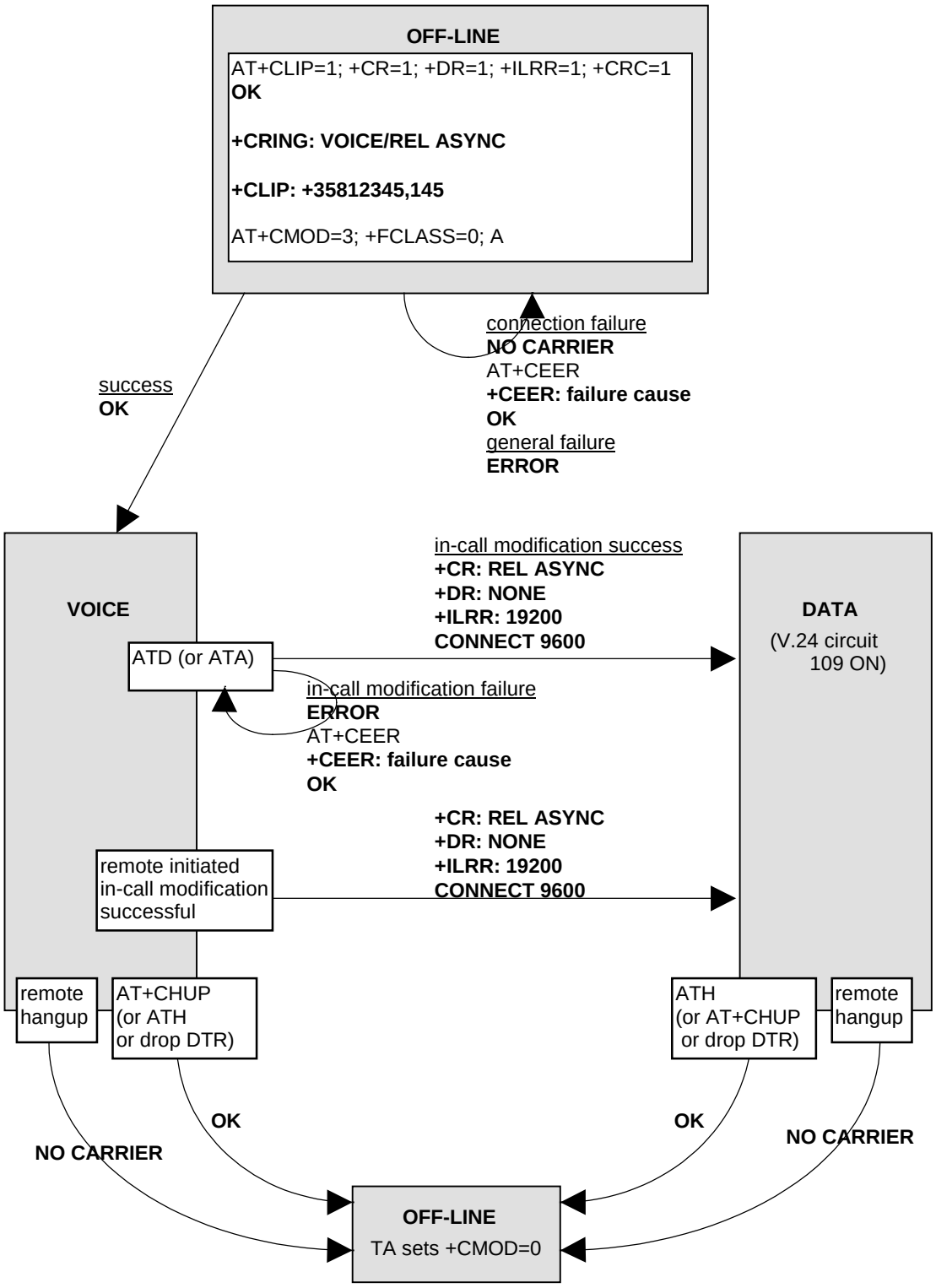

Figure F.1: MT BS 81 call

Annex G (informative): Voice call example

Figure G.1 illustrates the possible transitions in both MT and MO TS 11 calls. Responses and result codes generated by TA are in bold face.

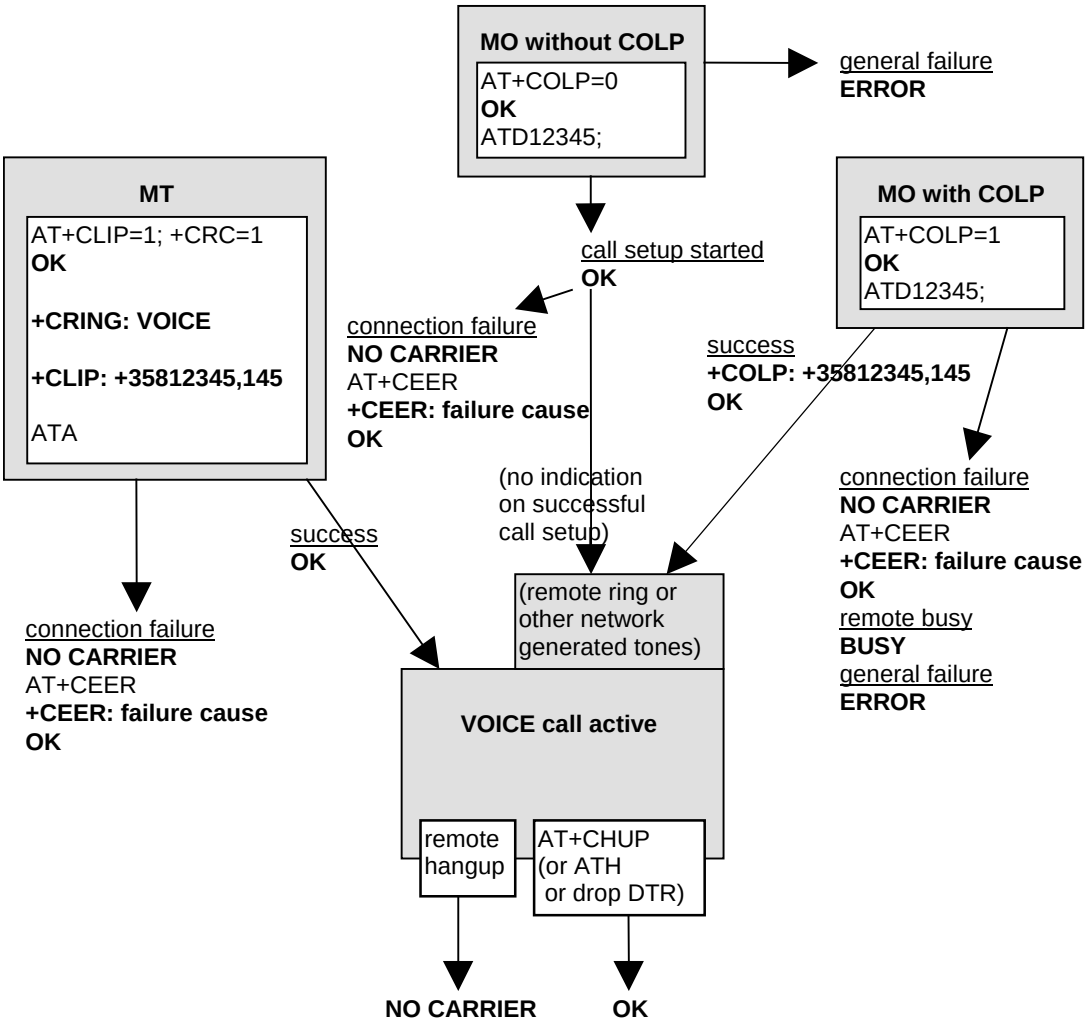

Figure G.1: TS 11 calls

Annex H (informative): Change history

TSG	TDoc	CR	REV	PH	CAT	SUBJECT	WORKITEM	NEW_VERS
T#4	TP-99118	New				Creation of 3GPP 27.007 v3.0.0 out of GSM 07.07 v7.2.0		3.0.0
T#4	TP-99124	001		R99	A	Additional result codes for +CLIP +CCWA	TEI	3.1.0
T#4	TP-99124	002		R99	B	ECSD additions	EDGE	3.1.0
T#4	TP-99124	003		R99	B	ECSD asymmetry (new command +CHSA)	EDGE	3.1.0
T#4	TP-99146	004		R99	A	Syntax error in +CHSN command	TEI	3.1.0
T#4	TP-99146	005		R99	A	Moving AT commands to 07.07 for 07.60 handover to SMG3 / 3GPP TSG CN WG3	GPRS	3.1.0
T#5	TP-99177	006		R99	D	ECSD AT command correction	EDGE	3.2.0
T#5	TP-99177	007		R99	B	Alarm functionality	TEI	3.2.0
T#5	TP-99177	008		R99	B	Phonebook storage	TEI	3.2.0
T#5	TP-99177	009		R99	B	Time Zone	TEI	3.2.0
T#5	TP-99177	010		R99	B	Additional result code for +CSSN	TEI	3.2.0
T#5	TP-99177	011		R99	B	New command for setting of Date format	TEI	3.2.0
T#5	TP-99177	012		R99	B	New command for Silent mode	TEI	3.2.0
T#5	TP-99177	013		R99	B	New command for setting of Time format	TEI	3.2.0
T#5	TP-99177	014		R99	B	GSM 400 Spectrum update	GSM 400	3.2.0
T#5	TP-99177	015		R99	A	AT command - Request GPRS service 'D'	GPRS	3.2.0
T#6	TP-99237	016		R99	F	Clarification to result codes for +CLIP +CCWA	TEI	3.3.0
T#6	TP-99237	017		R99	B	AT command for Frame Tunnelling Mode (FTM)	Frame Tunnelling Mode	3.3.0
T#6	TP-99237	018		R99	B	New AT command for application protocols activation	TEI	3.3.0
T#6	TP-99237	022		R99	B	Add new AT command (+CDIP) to inform the called line identification	TEI	3.3.0
T#6	TP-99237	020		R99	C	Packet Domain ATD command syntax	GPRS	3.3.0
T#6	TP-99237	021		R99	B	Additional parameter for +CBST	TEI	3.3.0
T#6	TP-99237	019		R99	B	AT-commands for Enhanced QoS Support management	Enhanced QoS Support in GPRS	3.3.0
T#7	TP-000024	024		R99	F	Deletion of the AT+CPROT? read command	TEI	3.4.0
T#7	TP-000024	025		R99	F	Adaptations for UMTS	TEI	3.4.0
T#7	TP-000024	026		R99	D	References to ASCI Specifications	ASCI	3.4.0
T#7	TP-000024	027		R99	D	Abbreviations related to ASCI	ASCI	3.4.0
T#7	TP-000024	028		R99	B	Priority indication in +CLCC, List Current Calls	ASCI	3.4.0
T#7	TP-000024	029		R99	B	Indication of priority, sub-address, sub-address type and TS 91/TS92 in +CRC, Cellular Result Codes	ASCI	3.4.0
T#7	TP-000024	030		R99	B	Commands for ASCI	ASCI	3.4.0
T#7	TP-000024	031		R99	B	Commands for eMLPP	eMLPP	3.4.0
T#7	TP-000024	032		R99	B	Example for usage of priority	eMLPP	3.4.0
T#8	TP-000073	033		R99	B	+CSDF,+CCLK and +CALA(4 digits for year field)	TEI	3.5.0
T#8	TP-000073	034		R99	F	APN presentation	TEI	3.5.0
T#8	TP-000073	035		R99	F	+CAJOIN also serves to join an ongoing group or a broadcast call	ASCI	3.5.0
T#8	TP-000073	036		R99	F	+CAULEV, the uplink status presentation in a Voice Group Call	ASCI	3.5.0
T#8	TP-000073	037		R99	F	CME ERROR extensions for ASCI Commands	ASCI	3.5.0
T#8	TP-000073	038		R99	F	Correction of the description of the +CRC	ASCI	3.5.0
T#8	TP-000073	039		R99	F	Definition of the abbreviation of MT	ASCI	3.5.0
T#8	TP-000073	040		R99	F	Packet Domain QoS AT-commands	TEI	3.5.0
T#9	TP-000143	041		R99	F	TE software implementations must take account of extra parameters	TEI	3.6.0
T#9	TP-000143	042		R99	F	APN presentation	TEI	3.6.0
T#9	TP-000144	043		R00	B	Introduction of a new AT command +CUUS1 to manage User-to-User Information element	ASCI	4.0.0
T#9	TP-000144	044		R00	B	Indication of priority and/or sub-address in the unsolicited result code CCWA	ASCI	4.0.0
T#9	TP-000144	045		R00	B	eMLPP SIM Commands	ASCI	4.0.0
T#9	TP-000144	046		R00	B	VBS, VGCS SIM Commands	ASCI	4.0.0
T#9	TP-000144	047		R00	A	Extension of dial command for VBS and VGCS	ASCI	4.0.0
T#9	TP-000144	048		R00	A	Introduction of a new AT command +COTDI to manage Originator-to-dispatcher information element	ASCI	4.0.0
T#11	TP-010028	053		Rel-4	A	Clarification of the specification to incorporate UICC/USIM references	TI-ATC	4.1.0
T#11	TP-010028	054		Rel-4	F	Update the AT command, +CPBS, that select the phonebooks in the SIM/UICC	TI-ATC	4.1.0

T#11	TP-010028	055		Rel-4	F	Correction of GSM references	TI-ATC	4.1.0
T#11	TP-010028	056		Rel-4	F	Update the AT commands that access the PLMN preferred list in the SIM/UICC	TI-ATC	4.1.0
T#11	TP-010028	057		Rel-4	F	Update of phonebook AT commands, +CBBS,+CPBR, +CPBF and +CPBW, to access the hidden phonebook entries	TI-ATC	4.1.0
T#11	TP-010028	058		Rel-4	A	Addition of explicit subscribed value to QoS command	TI-ATC	4.1.0
T#11	TP-010028	059		Rel-4	A	Corresponding GMM states for +CGREG command	TI-ATC	4.1.0
T#11	TP-010028	060		Rel-4	F	Definition of "class C in GPRS and circuit switched alternate mode"	TI-ATC	4.1.0
T#12	TP-010127	061		Rel-4	A	Aligning command AT+CSNS with changes introduced to single numbering scheme	TEI4	4.2.0
T#12	TP-010127	064		Rel-4	A	Inclusion of multimedia values to command AT+CBST	TEI4	4.2.0
T#12	TP-010127	066		Rel-4	A	Modification to Request Packet Domain service 'D' command	TEI4	4.2.0
T#12	TP-010127	068		Rel-4	A	Inclusion of IPv6 and removal of X.25 and OSPIH <PDP_type> values	TEI4	4.2.0
T#14	TP-010269	070	1	Rel-4	A	Obsolete +CGCLOSP and corrections due to IHOSS and OSP removal	TI-ATC	4.3.0
T#14	TP-010269	072		Rel-4	A	Obsolete +CGCLPAD and correstions due to X.25 removal	TI-ATC	4.3.0
T#14	TP-010269	074		Rel-4	A	Clarifications to AT commands used with circuit swiched data	TI-ATC	4.3.0
T#14	TP-010269	076		Rel-4	A	Correction in the +CGACT command explanation	TI-ATC	4.3.0
T#14	TP-010269	077		Rel-4	F	Correction of chapter heading and references	TI-ATC	4.3.0
T#14	TP-010269	079		Rel-4	A	Different compression algorithms in AT commands +CGDCONT and +CGDSCONT	TI-ATC	4.3.0
T#14	TP-010269	080		Rel-5	B	New AT command +CRMC (Ring Melody Control)	TEI5	5.0.0
T#14	TP-010269	081		Rel-5	B	Added reference to 23.227	TEI5	5.0.0
T#15	TP-020014	084		Rel-5	A	Alignment of UE architecture with 23.101	TEI5	5.1.0
T#16	TP-020103	085		Rel-6	B	Enhancement of AT command +CIND to indicate SMS rejection	TEI6	6.0.0
T#17	TP-020272	089		Rel-6	A	Clarification in the behaviour of AT+W46	TEI6	6.1.0
T#19	TP-030067	097	1	Rel-6	A	Clarification in the behaviour of AT+CGCLASS	TEI6	6.2.0
T#19	TP-030037	101		Rel-6	A	Correction ATV0 result codes	TEI6	6.2.0
T#19	TP-030071	105	1	Rel-6	A	Correction of AT+WS46 parameter values	TEI6	6.2.0
T#19	TP-030037	109		Rel-6	A	AT +CGEQREQ - Required Parameters for Streaming / Conversational Traffic Class	TEI6	6.2.0
T#20	TP-030113	110		Rel-6	F	Correction of references	TEI6	6.3.0
T#21	TP-030212	111		Rel-6	A	Adding reference to 24.008 for the 3G QoS AT-commands	TEI5	6.4.0
T#24	TP-040134	116	1	Rel-6	C	Updating error codes description to support UICC	TEI6	6.5.0
T#25	TP-040170	117		Rel-6	F	Correction to AT command +CHSN	HSCSD	6.6.0
T#25	TP-040170	118		Rel-6	B	Support of logical channels in AT commands	TEI6	6.6.0
T#26	TP-040225	120		Rel-6	A	Additional parameter for AT command +CRSM (Restricted SIM access)	TEI5	6.7.0
T#26	TP-040225	122		Rel-6	A	Corrections to AcTs of PLMN Selection	TEI5	6.7.0
T#26	TP-040225	123		Rel-6	C	Improve security in UICC generic access command +CGLA	TEI6	6.7.0
T#26	TP-040225	124		Rel-6	B	Support of EAP authentication command	TEI6	6.7.0
T#26	TP-040225	125		Rel-6	F	Correction of file identification in +CRLA command	TEI6	6.7.0
T#26	TP-040225	126		Rel-6	B	UICC Application Discovery Command +CUAD	TEI6	6.7.0
T#26	TP-040225	127		Rel-6	F	Clarification on the use of PIN with (U)SIM	TEI6	6.7.0
T#26	TP-040225	128		Rel-6	D	Editorial modifications to +CGLA and +CRLA commands	TEI6	6.7.0
T#26	TP-040225	129		Rel-6	B	Add RETRIEVE DATA and SET DATA APDU commands in +CRSM and +CRLA AT commands	TEI6	6.7.0
T#26	TP-040225	130		Rel-6	B	Extension of read, write and find phonebook entry commands for 3G phonebooks	TEI6	6.7.0
T#27	TP-050012	131		Rel-6	F	Align time zone range of AT+CCLK (CLOCK)	TEI	6.8.0
T#27	TP-050012	132		Rel-6	A	Illogical response in +CGDSCONT test command (REL 6)	TEI5	6.8.0
CT#31	CP-060126	137		Rel-7	F	QoS additions for the AT commands +CGEQREQ and +CGEQMIN	TEI7	7.0.0
CT#32	CP-060276	0138		Rel-7	F	Access technology added to AT commands +CREG and +CGREG	TEI7	7.1.0
CT#32	CP-060276	0139		Rel-7	F	Enhancement of parameter CI in AT commands +CREG and +CGREG	TEI7	7.1.0
CT#33	CP-060506	0140	1	Rel-7	F	Support for UTF-8 in AT-command +CSCS	TEI7	7.2.0
CT#35	CP-070155	0141	2	Rel-7	B	Addition of preferred network in AT command	TEI7	7.3.0
CT#36	CP-070371	0147	-	Rel-7	A	Extension of AT-command +CEAP	TEI6	7.4.0
CT#36	CP-070458	0145	1	Rel-7	A	Correction for AT-commands +CEAP, +CERP and +CUAD	TEI6	7.4.0
CT#36	CP-070395	0144	3	Rel-8	B	Introduction of the new AT command AT+CPSB	TEI8	8.0.0
CT#36	CP-070395	0148	2	Rel-8	B	Extension of parameter <Act> to include HSDPA- & HSUPA-capability	TEI8	8.0.0
CT#37	CP-070604	0149	3	Rel-8	C	Extension for AT-commands +CPBW, +CPBF and +CPBR	TEI8	8.1.0
CT#37	CP-070604	0150	3	Rel-8	B	AT-command +CVMOD to set the voice call preference	TEI8	8.1.0
CT#38	CP-070815	0152	2	Rel-8	B	AT-commands for location handling	TEI8	8.2.0
CT#39	CP-080136	0153		Rel-8	F	Corrections to +CMOLRG	TEI8	8.3.0
CT#40	CP-080361	0156		Rel-8	B	AT command for enabling/disabling the backlight	TEI8	8.4.0
CT#40	CP-080351	0158	1	Rel-8	B	TCRT: Short Data Transmission during ongoing VGCS	EVA	8.4.0
						Editorial change: sub clauses 8.51 and 8.52 swapped		8.4.1
CT#41	CP-080536	0159	1	Rel-8	B	Adding and extending AT-commands to support touch screen functions	TEI8	8.5.0
CT#41	CP-080536	0160	1	Rel-8	B	Setting of display resolution and scren orientation for touch screen functions	TEI8	8.5.0
CT#41	CP-080536	0161	1	Rel-8	C	AT Backlight command. CBKLT Default setting	TEI8	8.5.0
CT#42	CP-080873	0162	3	Rel-8	F	Corrections to +CMOLRG	TEI8	8.6.0

CT#42	CP-0808873	0163	3	Rel-8	B	AT-Commands for positioning assistance	TEI8	8.6.0
CT#42	CP-080866	0164	1	Rel-8	B	Introduction of new RAT-type for SAE	SAES	8.6.0
CT#42	CP-080866	0165	2	Rel-8	B	Additional AT commands for LTE/SAE	SAES	8.6.0
CT#42	CP-080872	0167		Rel-8	A	Restoring default value for TE character set	TEI7	8.6.0
CT#42	CP-080872	0168	2	Rel-8	A	Introduction of RAC to CGREG	TEI7	8.6.0
CT#43	CP-090159	0170	1	Rel-8	F	Correction of AT-Commands for positioning	TEI8	8.7.0
CT#43	CP-090130	0171	1	Rel-8	F	Support of dedicated bearer related AT command	SAES	8.7.0
CT#43	CP-090153	0172		Rel-8	B	AT-command for UE modes of operation in SAE	SAES-CSFB	8.7.0
CT#43	CP-090159	0174	1	Rel-8	F	Corrections for +CGCLASS	TEI8	8.7.0
CT#43				Rel-8		Editorial cleanup by MCC		8.7.0
CT#44	CP-090413	0178	1	Rel-8	F	Adding E-UTRAN to the Current Packet Switched Bearer AT command	SAES	8.8.0
CT#44	CP-090391	0177	2	Rel-8	F	Common AT Command Set for EPS and UMTS/GPRS for the PS Domain	SAES	8.8.0
CT#44	CP-090430	0175	1	Rel-9	B	AT command for CNAP (Calling Name Presentation)	TEI9	9.0.0
CT#44	CP-090430	0176	2	Rel-9	B	AT command for COLR (Connected Line Identfication Restriction Status)	TEI9	9.0.0
CT#45	CP-090679	0181		Rel-9	A	Corrections of AT-command for originated location request	TEI8	9.1.0
CT#45	CP-090679	0183		Rel-9	A	Origin for assist_data is corrected	TEI8	9.1.0
CT#45	CP-090682	0184		Rel-9	B	“non-GPS” enhancements of AT-command for originated location request	TEI9	9.1.0
CT#45	CP-090682	0185		Rel-9	F	Corrections to UCS2 coding of +CUSD	TEI9	9.1.0
CT#45	CP-090682	0186	1	Rel-9	B	New AT-commands for mobile terminated location request and disclosure	TEI9	9.1.0
CT#45	CP-090655	0188	1	Rel-9	A	Correct alignment of notes for +CEREG	SAES	9.1.0
CT#45	CP-090682	0189		Rel-9	B	Addition of intermediate result code for +CPBW	TEI9	9.1.0
CT#45	CP-090682	0190		Rel-9	B	New AT-commands for administration of battery	TEI9	9.1.0
CT#45	CP-090674	0192	1	Rel-9	A	Corrections to +CEMODE	SAES-CSFB,SAES	9.1.0
CT#46	CP-090920	0196		Rel-9	A	Correction of direction of data for +CPOS	TEI8	9.2.0
CT#46	CP-090922	0197	1	Rel-9	F	Correction of usage of underscore (default values) for 27.007	TEI9	9.2.0
CT#46	CP-090900	0200	1	Rel-9	A	Correction of outstanding Editor's note on +WS46	SAES	9.2.0
CT#47	CP-100135	0209	2	Rel-9	D	Correction of minor drafting rule issues for TS 27.007	TEI9	9.3.0
CT#47	CP-100102	0207		Rel-9	A	Removal of [,<pd1>[,…[,pdN]]] in +CGDCONT	TEI	9.3.0
CT#47	CP-100135	0208		Rel-9	F	Clarification of parameter type for +CCHO and +CCHC	TEI9	9.3.0
CT#47	CP-100131	0211		Rel-9	A	Incorrect indication of AT commands as parameter commands	TEI8, SAES	9.3.0
CT#47	CP-100135	0212	1	Rel-9	B	+CGDEL – AT-command for deletion of non-active PDP contexts and associated parameters	TEI9	9.3.0
CT#47	CP-100135	0214		Rel-9	A	Incorrect name for test command version of +CGTFTRDP	SAES	9.3.0
CT#47	CP-100107	0216		Rel-9	A	Correction of the packet domain event reporting +CGEV	SAES	9.3.0
CT#47	CP-100135	0217		Rel-9	F	The value range of <cid> for network initiated PDP contexts is clarified	TEI9	9.3.0
CT#47	CP-100145	0218	1	Rel-9	B	Addition of new AT-Command related to SSAC	SSAC	9.3.0
CT#47	CP-100144	0219	1	Rel-9	F	Correction of AT command for emergency bearer services	IMS_EMER_GPRS_EPS	9.3.0
CT#47				Rel-9		Editorial cleanup by MCC		9.3.0
CT#48	CP-100339	0221		Rel-9	A	Correction of unsolicited result codes for packet domain event reporting	SAES	9.4.0
CT#48	CP-100339	0223		Rel-9	A	+CGCONTRDP, alignment of with +CGTFT and +CGTFTRDP	SAES	9.4.0
CT#48	CP-100339	0228	1	Rel-9	A	Description of handling a request to disconnect when only connected to a single PDN	SAES	9.4.0
CT#48	CP-100339	0230	1	Rel-9	A	Support for +CGPADDR returning both IPv4 and IPv6 addresses	SAES	9.4.0
CT#48	CP-100339	0232	1	Rel-9	A	Clarification of relationship between CREG, CEREG and CGREG	SAES	9.4.0
CT#48	CP-100355	0234		Rel-9	F	Removal of remaining [,<pd1>[,…[,pdN]]] in +CGDCONT	TEI9	9.4.0
CT#48	CP-100355	0238		Rel-9	F	Addition of missing parameter in +CNAP	TEI9	9.4.0
CT#48	CP-100371	0226		Rel-10	B	Support of compressed IPv6 format in AT-commands	TEI10	10.0.0
CT#48	CP-100369	0224	2	Rel-10	B	Control of P-CSCF address discovery	AT_IMS	10.0.0
CT#48	CP-100369	0225	1	Rel-10	B	+CISRVCC and +CIREP, new AT-commands for support of SRVCC	AT_IMS	10.0.0
CT#48	CP-100369	0233	1	Rel-10	B	Control of IM CN Subsystem Signalling Flag	AT_IMS	10.0.0
CT#49	CP-100520	0240	1	Rel-10	F	Alignment of table headers with AT-command names	TEI10	10.1.0
CT#49	CP-100492	0243	2	Rel-10	A	AT commands for eCall	eData	10.1.0
CT#49	CP-100485	0248	1	Rel-10	A	Clarification of AcT parameter in CREG, CGREG and CEREG	SAES	10.1.0
CT#49	CP-100571	0249	4	Rel-10	B	USAT over AT	AT_UICC	10.1.0
CT#49	CP-100518	0250		Rel-10	F	Clarification to +COPS.	TEI10	10.1.0
CT#49	CP-100520	0251	1	Rel-10	B	AT command for remaining PIN retries for MT passwords, +CPINR	TEI10	10.1.0
CT#49	CP-100520	0252	2	Rel-10	B	AT command for supporting multiple cards installed in a ME	TEI10	10.1.0
CT#49	CP-100520	0253	1	Rel-10	B	AT command for Emergency Numbers +CEN	TEI10	10.1.0
CT#50	CP-100763	0254	2	Rel-10	B	TC-RT: Introduction of group IDs with prefix	TEI10	10.2.0
CT#50	CP-100742	0256	1	Rel-10	A	Correction of Table 8.58-1 for +CMTLRA	TEI9	10.2.0
CT#50	CP-100763	0257		Rel-10	F	Correction of terminology for result codes and alignment of Annex B	TEI10	10.2.0
CT#50	CP-100757	0258	1	Rel-10	B	Examples of AT-commands for USAT	AT_UICC	10.2.0

CT#50	CP-100757	0259	1	Rel-10	C	Multiple corrections to AT-commands for USAT	AT_UICC	10.2.0
CT#50	CP-100757	0260	2	Rel-10	F	Removal of editor's note on security mechanism for AT-commands for USAT	AT_UICC	10.2.0
CT#50	CP-100747	0262	2	Rel-10	A	+CGDCONT syntax	IMS_EMER_GPRS_EPS	10.2.0
CT#50	CP-100763	0263	1	Rel-10	F	+CGEV for IP address types	TEI10	10.2.0
CT#50	CP-100763	0265		Rel-10	F	Correction of references for +CNAP	TEI10	10.2.0
CT#50	CP-100763	0266		Rel-10	F	Correction of action versus parameter commands	TEI10	10.2.0
CT#50	CP-100763	0267	1	Rel-10		Correction of print of the IP address format	TEI10	10.2.0
CT#50	CP-100763	0268	1	Rel-10	B	New AT-command for Network Emergency Bearer Services Support +CNEM	TEI10	10.2.0
CT#50	CP-100763	0270	3	Rel-10		AT command for creating connection status event	TEI10	10.2.0
CT#51	CP-110197	0271	1	Rel-10	B	Enhancement of +CPOS and +CPOSR for LPP, capability request and velocity request, GLONASS and SBAS	TEI10	10.3.0
CT#51	CP-110197	0272		Rel-10	B	Enhancement and alignment of +CLIP, +CCWA and +CLCC when CLI is not available	TEI10	10.3.0
CT#51	CP-110197	0273	1	Rel-10	F	Support of AT commands for voice	TEI10	10.3.0
CT#51	CP-110188	0274	1	Rel-10	F	Correction of USAT profile activation	AT_UICC	10.3.0
CT#51	CP-110188	0275	1	Rel-10	B	Detection of currently active SIM or USIM	AT_UICC	10.3.0
CT#51	CP-110188	0277	1	Rel-10	C	Modification of default profiles and write response	AT_UICC	10.3.0
CT#51	CP-110188	0278	1	Rel-10	F	Correction of USAT event response	AT_UICC	10.3.0
CT#51	CP-110197	0279	1	Rel-10	F	Clarification of relationship between CREG, CEREG and CGREG. Introduction of registration for EPS and non-EPS services for 'SMS only' in CREG.	TEI10	10.3.0
CT#51	CP-110186	0280	1	Rel-10	B	+CAVIMS, availability for voice calls with the IMS	AT_IMS	10.3.0
CT#51	CP-110197	0281		Rel-10	B	Addition of registeration status to CREG,CGREG, CEREG command for emergency attached UE	TEI10	10.3.0
CT#51	CP-110197	0282	2	Rel-10	B	+CESQ, new AT-command on extended signal quality	TEI10	10.3.0
CT#52	CP-110454	0286		Rel-10	A	+CGDATA, correction of syntax	TEI8	10.4.0
CT#52	CP-110461	0287	1	Rel-10	F	Cleanups for WI AT_UICC	AT_UICC	10.4.0
CT#52	CP-110466	0291	1	Rel-10	F	CREG, CEREG and CGREG: clarification for 'out of coverage'	TEI10	10.4.0
CT#53	CP-110669	0292	2	Rel-10	F	Clarifying the indication of availability for voice calls in the IMS and in the PS	AT_IMS	10.5.0
CT#53	CP-110695	0288	4	Rel-11	B	+CGAUTH, new AT-command for definition of PDP context authentication parameters	TEI11	11.0.0
CT#53	CP-110695	0293	3	Rel-11	B	Enhancements to Event Reporting due to CBS primary notifications	TEI11	11.0.0
CT#53	CP-110695	0294	1	Rel-11	C	Enhancing touch screen actions and events	TEI11	11.0.0
CT#53	CP-110695	0295	1	Rel-11	C	Enhancing supported orientations by AT command +CSO	TEI11	11.0.0
CT#53	CP-110695	0296	1	Rel-11	C	Enhancing the assumption that touch screen size is equal to display screen size	TEI11	11.0.0
CT#54	CP-110875	0298		Rel-11	A	Corrections to +VIP	TEI10	11.1.0
CT#54	CP-110865	0303		Rel-11	A	+CMOLR: Third Party Address should be specified when Method value set to 5	TEI9	11.1.0
CT#54	CP-110882	0304	1	Rel-11	C	Add support for display orientation event reporting	TEI11	11.1.0
CT#54	CP-110864	0308		Rel-11	A	Correcting syntax of +CMER	TEI8	11.1.0
CT#54	CP-110882	0309	1	Rel-11	B	Introduction of a default PDP context (cid=0)	TEI11	11.1.0
CT#54	CP-110881	0310	1	Rel-11	B	IMS registration information, +CIREG	TEI11	11.1.0
CT#54	CP-110882	0311		Rel-11	F	Corrections to +CGCONTRDP and +CGSCONTRDP	TEI11	11.1.0
CT#54	CP-110882	0312		Rel-11	F	Addition of missing brackets to make responses optional	TEI11	11.1.0
CT#54	CP-110882	0313		Rel-11	F	Correction to +CRLP	TEI11	11.1.0
CT#54	CP-110864	0317	1	Rel-11	A	Corrections to +CGCONTRDP	TEI8	11.1.0
CT#54	CP-110882	0318		Rel-11	B	No More PS Data, +CNMPSD	TEI11	11.1.0
CT#54	CP-110882	0319	2	Rel-11	B	Setting UE Usage Setting, +CEUS	TEI11	11.1.0
CT#54	CP-110882	0320	1	Rel-11	C	Modifying +CGCONTRDP to indicate that connectivity is provided by a LIPA PDN connection	TEI11	11.1.0
CT#55	CP-120113	0322		Rel-11	A	+CESQ=?, removal of non-existing parameter <rep>	TEI10	11.2.0
CT#55	CP-120113	0324	1	Rel-11	A	+CESQ, alignment of parameters with value ranges in 3GPP TSs	TEI10	11.2.0
CT#55	CP-120113	0326		Rel-11	A	Correction of +CSUS	TEI10	11.2.0
CT#55	CP-120125	0327	1	Rel-11	F	Correction of action command syntax according to V.250	TEI11	11.2.0
CT#55	CP-120125	0328		Rel-11	F	Usage of AT-commands in insecure scenarios	TEI11	11.2.0
CT#55	CP-120125	0329		Rel-11	F	Correction of AT-command +CALCC	TEI11	11.2.0
CT#55	CP-120125	0330		Rel-11	F	Response to test version of AT- commands shall not be optional	TEI11	11.2.0
CT#55	CP-120125	0331	1	Rel-11	C	+CREG, +CGREG and +CEREG, addition of cause values	TEI11	11.2.0
CT#55	CP-120125	0332		Rel-11	F	Indication of optional parameter in AT-command syntax	TEI11	11.2.0
CT#55	CP-120124	0333	1	Rel-11	F	Clarification of SRVCC handover information in +CIREPH AT command	TEI11	11.2.0
CT#55	CP-120125	0335		Rel-11	F	Alignment of descriptions for context parameters	TEI11	11.2.0
CT#55	CP-120125	0337	2	Rel-11	B	Setting configuration values specified in TS 24.167, +CEVDP, +CVDP, +CMMIVT	TEI11	11.2.0
CT#55	CP-120125	0338	1	Rel-11	B	Adding +CASIMS: SMS using IMS support indication	TEI11	11.2.0
CT#55	CP-120125	0340		Rel-11	F	Correct +CREG reported status	TEI11	11.2.0
CT#55	CP-120125	0342		Rel-11	F	Corrections to CPNER parameters	TEI11	11.2.0

CT#56	CP-120309	0343	1	Rel-11	F	Alignment of response codes	TEI11	11.3.0
CT#56	CP-120309	0344		Rel-11	F	Removal of editor's note for security aspects of public warning systems in Rel-11	TEI11	11.3.0
CT#56	CP-120309	0345		Rel-11	F	Response to +CNEM=? is missing	TEI11	11.3.0
CT#56	CP-120309	0346		Rel-11	F	Correction of value range for <QCI>	TEI11	11.3.0
CT#56	CP-120309	0347	1	Rel-11	B	<SS_code> added to result codes +CSSI and +CSSU	TEI11	11.3.0
CT#56	CP-120309	0348		Rel-11	F	Update of AT command +CMUX	TEI11	11.3.0
CT#56	CP-120313	0349	2	Rel-11	F	Modifications to UR code for SRVCC due to introduction of vSRVCC	vSRVCC-CT	11.3.0
CT#56	CP-120309	0354	2	Rel-11	F	Correction of TFT description	TEI11	11.3.0
CT#56	CP-120325	0355	3	Rel-11	B	AT commands for URI dialling	ATURI	11.3.0
CT#56	CP-120309	0356		Rel-11	F	Correction of response to +CPSB?	TEI11	11.3.0
CT#57	CP-120584	0357	2	Rel-11	B	+CPOS and +CPOSR, enhancementst for OTDOA	TEI11	11.4.0
CT#57	CP-120604	0359	1	Rel-11	B	Completion of basic dialup scenaros with +CDU	ATURI	11.4.0
CT#57	CP-120584	0360		Rel-11	F	Clarification of time-information elements of +CPOS	TEI11	11.4.0
CT#57	CP-120604	0362	1	Rel-11	B	Service URNs in AT commands	ATURI	11.4.0
CT#58	CP-120794	0364	1	Rel-11	F	Parameters missing for response to +CUSATE	TEI11	11.5.0
CT#58	CP-120813	0365	3	Rel-11	B	Addition of per-call based SS-parameters to +CDU	ATURI	11.5.0
CT#58	CP-120813	0366	3	Rel-11	F	Completion of AT command for hangup	ATURI	11.5.0
CT#58	CP-120813	0367	3	Rel-11	B	Further refinement of the call monitoring command and its responses	ATURI	11.5.0
CT#58	CP-120794	0368	1	Rel-11	F	Inclusion of APN aggregate maximum bit rate in +CGEQOSRDP	TEI11	11.5.0
CT#58	CP-120814	0369	7	Rel-11	B	Communication service indication in AT commands	ATURI	11.5.0
CT#58	CP-120794	0370		Rel-11	B	New method introduced for +CMOLRE	TEI11	11.5.0
CT#58	CP-120794	0371	1	Rel-11	F	+CGCONTRDP: support providing more or less than 2 IP addresses	TEI11	11.5.0
CT#58	CP-120861	0373	3	Rel-11	B	Extension of +CPOSR	TEI11	11.5.0
CT#58	CP-120794	0374	1	Rel-11	B	Time of day inclusion for +CPOS	TEI11	11.5.0
CT#58	CP-120794	0376	1	Rel-11	F	DTD corrections for +CPOS and +CPOSR	TEI11	11.5.0
CT#58	CP-120813	0377	2	Rel-11	B	ATURI editor's notes	ATURI	11.5.0
CT#58	CP-120795	0379	2	Rel-11	F	+CEPPI: Power Preference Indication for EPS	TEI11	11.5.0
CT#58	CP-120806	0380	2	Rel-11	F	AT command support for rSRVCC handover	rSRVCC-CT	11.5.0
CT#59	CP-130115	0378	3	Rel-11	F	Enabling upper layers to deal with GPRS, EPS, VBS / VGCS and eMLPP related errors	TEI11	11.6.0
CT#59	CP-130120	0381	2	Rel-11	B	Completion of presentation-related supplementary services wrt SIP-URIs	ATURI	11.6.0
CT#59	CP-130120	0382	1	Rel-11	B	Completion of mid-call related SSs for SIP-URIs	ATURI	11.6.0
CT#59	CP-130120	0383		Rel-11	F	Corrections to +CECUG	ATURI	11.6.0
CT#59	CP-130120	0386	3	Rel-11	B	SDP in media profiles	ATURI	11.6.0
CT#59	CP-130120	0388	1	Rel-11	F	Renaming of 'voice client'	ATURI	11.6.0
CT#59	CP-130120	0390	1	Rel-11	B	Update of media during a call	ATURI	11.6.0
CT#60	CP-130234	0393	1	Rel-11	A	Corrections of +CSSAC	SSAC	11.7.0
CT#60	CP-130254	0404	1	Rel-11	F	Removal of Editors note for ATURI	ATURI	11.7.0
CT#60	CP-130254	0406	1	Rel-11	F	Missing optionality for UR-code +CMCCSS7: <CUG_index>	ATURI; TEI11	11.7.0
CT#60	CP-130254	0409	2	Rel-11	B	Call Forwarding URI support	ATURI	11.7.0
CT#61	CP-130502	0414	1	Rel-11	F	+CDEFMP error response	ATURI	11.8.0