OFDMA/TDMA TDD
Broadband Wireless Access System
(XGP)

ARIB STANDARD

ARIB STD-T95 Version 3.3

Version 1.0	December	12th 2007
Version 1.1	June	6th 2008
Version 1.2	March	18th 2009
Version 1.3	December	16th 2009
Version 2.0	July	7th 2011
Version 2.1	February	14th 2012
Version 2.2	December	18th 2012
Version 3.0	July	3rd 2013
Version 3.1	March	18th 2014
Version 3.2	July	31th 2014
Version 3.3	March	17th 2015

Association of Radio Industries and Businesses

General Notes to ARIB Standards and Technical Reports.

1. The copyright of this document is ascribed to the Association of Radio Industries and Businesses (ARIB).
2. All rights reserved. No part of this document may be reproduced, stored in a retrieval system, or transmitted, in any form or by any means, without the prior written permission of ARIB.
3. Attachment 3 is reproduced with the consent of XGP Forum which owns the copyright in it.
4. The establishment, revision and abolishment of ARIB Standards are approved at the ARIB Standard Assembly which meets several times a year. Approved ARIB Standards in their original language are made publicly available in hard copy, CDs or through web posting, generally in about one month after the date of approval.
5. The note about IPR (Industrial Property Rights) of the standard applies to the use of Essential IPR for the ARIB Standard in Japan. If the ARIB Standard is adopted outside Japan, Essential IPR will be treated in accordance with policies stated by each IPR owner. The IPR owners are, however, expected to apply the rules of the preface of the "Guidelines for Treatment of Industrial Property Rights in connection with the ARIB standard" (September 5, 1995, approved by the 1st Standard Assembly Meeting). In the preface of the Guidelines, it is stated that it is "desirable that the Essential IPR which relates to any or all parts of the contents of the ARIB Standards should be used free of charge by anyone and that it would not block the uses of such Essential IPR in any other country where such an ARIB Standard is adopted"

Preface

Introduction

Association of Radio Industries and Businesses (hereinafter ARIB) investigates and summarizes the basic technical requirements for various radio systems in the form of “technical standard (ARIB STD)”. These standards are being developed with the participation of, and through discussions amongst various radio equipment manufacturers, operators and users.

ARIB standards include “government technical standards” (mandatory standards) that are set for the purpose of encouraging effective use of frequency resources and preventing interference, and “private technical standards” (voluntary standards) that are defined in order to guarantee compatibility between radio facilities, to secure adequate transmission quality as well as to offer greater convenience to radio equipment manufacturers and users, etc.

An ARIB STANDARD herein is published as "OFDMA/TDMA TDD Broadband Wireless Access System (XGP)". In order to ensure fairness and transparency in the defining stage, the standard was set by consensus of the standard council with participation of interested parties including radio equipment manufacturers, telecommunications operators, broadcasters, testing organizations, general users, etc. with impartiality.

ARIB sincerely hopes that this standard be utilized actively by radio equipment manufacturers, telecommunications operators, and users, etc.

INDUSTRIAL PROPERTY RIGHTS (IPRs)

Although this ARIB Standard contains no specific reference to any Essential Industrial Property Rights relating thereto, the holders of such Essential Industrial Property Rights state to the effect that the rights listed in Attachment 1 and 2, which are the Industrial Property Rights relating to this standard, are held by the parties also listed therein, and that to the users of this standard, in the case of Attachment 1 (selection of option 1), such holders shall not assert any rights and shall unconditionally grant a license to practice such Industrial Property Rights contained therein, and in the case of Attachment 2 (selection of option 2), the holders shall grant, under the reasonable terms and conditions, a non-exclusive and non-discriminatory license to practice the Industrial Property Rights contained therein. However, this does not apply to anyone who uses this ARIB Standard and also owns and lays claim to any other Essential Industrial Property Rights of which is covered in whole or part in the contents of provisions of this ARIB Standard.

List of Essential Industrial Property Rights (IPRs)

The lists of Essential Industrial Property Rights (IPRs) are shown in the following attachments.

Attachment 1 List of Essential Industrial Property Rights (selection of option 1)
Attachment 2 List of Essential Industrial Property Rights (selection of option 2)

Contents

Preface
INTRODUCTION
INDUSTRIAL PROPERTY RIGHTS (IPRs)
List of Essential Industrial Property Rights (IPRs)

Chapter 1 General Descriptions 1
1.1 Overview 1
1.2 Scope of the Standard 1
1.3 Reference Regulations 2
1.4 Reference Documents 2
Chapter 2 Technical Requirements for Radio Facilities 3
2.1 General Conditions 3
2.1.1 System Structure (ORE,Article 49.29) 3
2.1.2 Radio Frequency Band (ORE,Article 49.29) 3
2.1.3 Modulation Method (ORE,Article 49.29) 3
2.1.4 General Requirement (ORE,Article 49.29) 3
2.1.5 Carrier Aggregation (ORE Article 49.29, 2013) 5
2.2 Conditions Relating to Transmitter and Receiver 5
2.2.1 Transmission Characteristics 5
2.2.1.1 Transmission Power (ORE,Article 49.29) (ORE.Article 14) (NT No.435.2012) 5
2.2.1.2 Adjacent Channel Power (NT No.435, 2012) 8
2.2.1.3 Transmission Intermodulation (NT No. 435, 2012) 10
2.2.1.4 Transmission Synchronization (NT No. 435, 2012) 11
2.2.1.5 Carrier off Time Leakage Power (ORE,Article 49.29) 12
2.2.1.6 Tolerance Limits of the Intensity of Unwanted Emission in Spurious Domain (NT No. 435, 2012) 12
2.2.1.7 Allowed Value for Occupied Bandwidth (ORE, Article 6,Table 2) 15
2.2.1.8 Frequency Stability (ORE, Article 5,Table 1) 15
2.2.1.9 Transmission Antennas (ORE,Article 49.29) 16
2.2.1.10 SAR (ORE,Article 14.2) (NT 435, 2012) 16
2.2.1.11 System condition (only Non-regenerative repeating of Low Power Repeater) 16
2.2.1.12 Out of band gain (only Non-regenerative repeating of Low Power Repeater) (NT 435, 2012) 16

2.2.2 Reception Characteristics 17
2.2.2.1 Sensitivity 17
2.2.2.2 Adjacent Channel Selectivity 17
2.2.2.3 Intermodulation Characteristic 17
2.2.2.4 Spurious Response Immunity 18
2.2.2.5 Conducted Spurious Component (ORE,Article 24) 18
Chapter 3 Physical and MAC Layer Specifications 22
Chapter 4 Japanese specific matters 23
Chapter 5 Measurement Method 24

Attachment
Attachment 1 List of Essential Industrial Property Rights (selection of option 1)
Attachment 2 List of Essential Industrial Property Rights (selection of option 2)
Attachment 3 XGP specifications

Change History

Chapter 1 General Descriptions

1.1 Overview

This standard specifies requirements of the radio equipment of radio stations stipulated in the Ministry of Internal Affair and Communications (MIC), Ordinance Regulating Radio Equipment, Article 49.29 (this refers to the radio equipment of radio stations of OFDMA/TDMA or SC-FDMA/TDMA TDD Broadband Wireless Access System using 2.5 GHz band. XGP, which is defined as the technology for personal wireless broadband services based on all-IP core network.

The standard shall be in accordance with MIC Ordinance Regulating Radio Equipment, Article 49.29 (including related notifications) when XGP facilities are used in Japan.

1.2 Scope of the Standard

XGP Network consists of Mobile Station (MS), Base Station (BS) and IP networks, and the scope of the standard is shown in Figure 1.1.

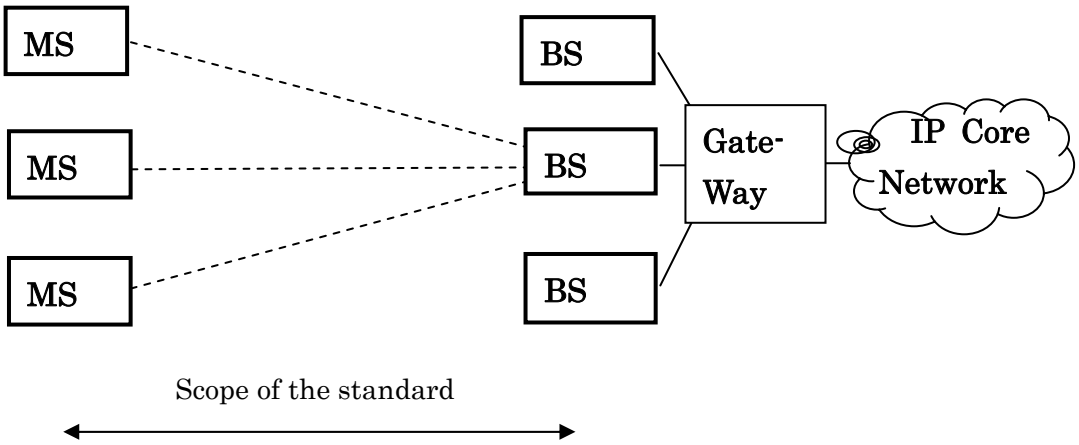

Figure 1.1 Configuration of XGP Network

Mobile Station (MS) is used by the end users to access the network. XGP Network comprises base stations (BS) and Gateways. BS is responsible for providing the air interface to MS, while Gateway typically acts as IP layer transporter to Network.

This standard defines the minimum level of specifications required for connection and services for XGP. This consists of two different specifications, i.e., Japanese regulatory

specifications applied for radio systems, and Physical and MAC layers specifications. The Japanese regulatory specifications are developed by national regulatory administration, i.e. the Ministry of Internal Affair and Communications (MIC). The physical and MAC layers specifications are developed by international standard organization, i.e., XGP Forum.

This standard is intended to combine the national regulations and the international specifications, however in case of inconsistency between them, the national regulations shall prevail. The national regulations are the mandatory requirements for operation of XGP in Japan.

1.3 Reference Regulations

The acronyms of the referenced regulations used in this standard are as follows;

RERL : Regulations for Enforcement of Radio Law

ORE : Ordinance Regulating Radio Equipment

OTRCC: Ordinance Concerning Technical Regulations Conformity Certification etc. of Specified Radio Equipment.

OTF: Ordinance Concerning Terminal Facilities etc.

RTCCA: Rules Concerning the Technical Conditions Compliance approval etc. for Terminal Equipment.

NT: "Notification" refers to a Notification of the Ministry of Internal Affairs and Communications.

1.4 Reference Documents

- A-GN4.00-03-TS "XGP Specifications"

Chapter 2 Technical Requirements for Radio Facilities

This chapter has regulations regarding the technical requirements for radio facilities for the radio station of XGP in Japan.

MIC Ordinances and related Notifications contained in the chapter 2 are translated into English from the original Japanese regulations of MIC Ordinances and related Notifications. The original Japanese regulations shall prevail if any ambiguity exists between the requirements and the original in Japanese.

2.1 General Conditions

2.1.1 System Structure (ORE,Article 49.29)

(1) Base Station (BS)

(2) Mobile Station (MS)

(3) Low Power Repeater

Low Power Repeaters is Mobile Station that relays between BS and MS.

(4) Relay Station (RS)

For the technical requirement of RS, the radio equipment (uplink) which communicates with BS complies with the technical requirement of MS and the radio equipment (downlink) which communicates with MS complies with the technical requirement of BS.

(5) Radio station which establishes communication and other operation for maintenance of radio equipment

If communication is not possible between a radio station which establishes communication to maintain or adjust a radio equipment of BS in OFDM / TDM access scheme broadband mobile radio access system or such BS and MS which is a partner of such BS in communication, it means a radio station operating as RS.

2.1.2 Radio Frequency Band (ORE,Article 49.29)

The radio frequency band is the 2.5 GHz band (over 2,545 MHz - 2,655 MHz or less).

2.1.3 Modulation Method (ORE,Article 49.29)

The modulation methods are BPSK, QPSK, 16QAM, 32QAM, 64QAM and 256QAM.

2.1.4 General Requirement (ORE,Article 49.29)

(1) Communication method shall be as follows:

- For transmission from BS or RS to MS, or from BS to RS, from Low Power Repeater to

MS; (downlink)

The multiplexing method is a combination of OFDM and TDM, or OFDM, TDM and SDM.

- For transmission from MS or RS to BS, or from MS to RS, from Low Power Repeater to BS; (uplink)

The access method is a combination of OFDMA and TDMA, a combination of OFDMA, TDMA and SDMA, or a combination of SC-FDMA and TDMA, a combination of SC-FDMA, TDMA and SDMA.

(2) Transmission equipment of each MS which establishes communication with BS or RS shall be automatically identified.

(3) Switching from a traffic channel of one BS or RS to a traffic channel of other BS or RS shall be automatically performed. (Except that communication system is configured by MS with absolute gain of transmission antenna of over 4 dBi.)

(4) Radio equipment of BS shall be connectable to telecommunication line equipment.

(5) The power supply of radio equipment in MS of which absolute gain of transmission antenna is 4 dBi or higher and 10 dBi or lower shall be AC (alternate current) power.

(6) The radio frequency transmitted from MS shall be automatically selected by receiving the radio wave from its partner BS or radio station which establishes communication to test the radio equipment in this system.

(7) In addition to the above items, radio equipment shall comply with the technical requirement separately notified by Minister for Internal Affairs and Communications.

(8) Type of repeater shall be as follows: (only Low Power Repeater)

The repeater shall be of Non-regenerative and Generative repeating type.

Table 2.1.4-1 Type of Repeater

Type of Repeater	Non-regenerative repeater		Generative repeater	
Relay frequency	Same frequency	Different frequency	Same frequency	Different frequency
Configuration	Integrated or separated type		Integrated or separated type	

2.1.5 Carrier Aggregation (ORE Article 49.29, 2013)

The Carrier Aggregation (CA) technology is applied to the transmission from a single or multiple base stations (under operation by a single operator only) to a single mobile station.

2.2 Conditions Relating to Transmitter and Receiver

2.2.1 Transmission Characteristics

2.2.1.1 Transmission Power (ORE,Article 49.29) (NT No.435.2012)

(1) The transmission power of BS shall be as follows.

Table 2.2.1.1-1 Transmission Power of BS(1) (Note)

The absolute gain of transmission antenna	The transmission power
17 dBi or less (Note1)	2.5/5/10MHz System: 20 W or less 20MHz system: 40 W or less
Over 17 dBi to 20 dBi or less (Note1, 2)	20 W or less
Over 20 dBi to 23 dBi or less (Note1, 2)	5 W or less
Over 23 dBi to 25 dBi or less (Note1, 2)	3.2 W or less

In the case of Mobile Relay Station, it shall be also 25dBi or less, and 20W or less (40W or less in case of 20MHz channel separation system)

Note1: The following transmitter shall be limited for use in depopulated areas, mountain villages, isolated island areas or the areas authorized by Minister of Internal Affairs and Communications

; The transmitter in BS that communicates with MS or RS of which absolute gain of transmission antenna exceeds 4 dBi.

; The transmitter in BS with absolute gain of transmission antenna of over 17 dBi.

Note2: The BS with absolute gain of transmitting antenna of over 17 dBi shall communicate with only one radio station.

(2) The transmission power of BS (2) shall be as follows.

Table 2.2.1.1-2 Transmission Power of BS (2)

The absolute gain of transmission antenna	The transmission power
4 dBi or less (Note1, 2, 3 and 4)	200mW or less

Note1: The BS unit shall be installed in a single cabinet which cannot be disassembled easily, except for the units of the power supply and the antenna part.

Note2: The antenna unit cannot be detached easily.

Note3: A functionality, by which the malfunction is detected autonomously and the radio transmission is stopped accordingly, shall be equipped.

Note4: A functionality, by which the radio transmission is stopped in case the connection with the radio equipment cannot be ensured, shall be equipped.

(3) The transmission power of MS (except for Relay operation) shall be as follows

Table 2.2.1.1-3 Transmission Power of MS (1).Note

The absolute gain of transmission antenna	The transmission power
4 dBi or less (Note3, Note4)	200 mW or less
Over 4 dBi to 10 dBi or less (Note1, 2)	200 mW or less
Over 10 dBi to 20 dBi or less (Note2,)	200 mW or less
Over 20 dBi to 23 dBi or less (Note2)	100 mW or less
Over 23 dBi to 25 dBi or less (Note2)	63 mW or less

Note1: The transmitter in MS with absolute gain of transmission antenna of over 4 dBi to 10 dBi or less is restricted to use in doors or the place where screening effect of radio wave is equal to indoor.

Note2: The transmitter in MS with absolute gain of transmission antenna of over 4 dBi shall be limited for use in depopulated areas, mountain villages, isolated islands or the areas authorized by Minister of Internal Affairs and Communications, also shall not communicate with the BS which is installed except in the above places.

Note3: In case of Generative repeater of a single carrier Low Power repeater, the antenna transmission power shall be 200mW or less.

In case of Generative repeater of multiple carrier Low Power repeater, the antenna transmission power shall be 200mW or less per a single carrier. In addition, in case of a repeater from MS to BS or from BS to MS, total power of the antennas

transmission shall be 600mW or less.

Note4: In case of Non-regenerative repeater from MS to BS or from BS to MS, total power of antennas transmission shall be 200mW or less.

(4) The transmission power of MS (specifically only for Relay operation) shall be as follows.

Table 2.2.1.1-4 Transmission Power of MS (2), Note

The absolute gain of transmission antenna	The transmission power
4 dBi or less	200 mW or less

Note1: It shall have a functionality of avoiding interference to other radio stations

(5) The MS that communicates with BS of which absolute gain of transmission antenna is over 17 dBi shall be as follows.

Table 2.2.1.1-5 Transmission Power of MS (3)

The absolute gain of transmission antenna	The transmission power
23 dBi or less	200 mW or less
Over 23 dBi to 25 dBi or less	126 mW or less

Note: The transmitter in MS shall be limited for use in depopulated areas, mountain villages, isolated islands or the areas authorized by Minister of Internal Affairs and Communications, and shall not communicate with the BS which is located at the places except for there above.

(6) The transmitter in RS (ORE Article 14)

- Transmission to BS:

The value for MS shown in the Table 2.2 and Table 2.3 should be referred.

- Transmission to MS:

The value for BS shown in the Table 2.1 should be referred.

Tolerance for transmission power:

BS: Within +87 %, -47 %

MS: Within +87 %, -47 %

Low Power Repeater: Within +87 %, -47 %

2.2.1.2 Adjacent Channel Leakage (ACL) Power and Outband Unwanted Radiation (NT No.435, 2012)

(1) Standards

The adjacent channel leakage power and outband unwanted emission of the transmitter in RS shall apply as follows.

- Transmission to BS:

The value for MS shown in the Table 2.1.2-1 should be referred.

- Transmission to MS:

The value for BS shown in the Table 2.1.2-2 should be referred.

Table 2.2.1.2-1 Adjacent Channel Leakage (ACL) Power and Outband Unwanted Emission of MS and the Low Power Repeater

Channel spacing	Allowed levels of Adjacent channel leakage power (1), and Outband unwanted emission (2), (3)
2.5 MHz	(1) In the band of ±1.25 MHz from the offset frequency of ±2.5 MHz: 2 dBm or less (2) In the band of the offset frequency from 3.75 MHz to less than 6.25 MHz: -10 dBm /MHz or less.
5 MHz	(1) In the band of ±2.5 MHz from the offset frequency of ±5 MHz: 2dBm or less (2) In the band of the offset frequency from 7.5 MHz to less than 12.5 MHz: -10 dBm/MHz or less
10 MHz	(1) In the band of ±5MHz from the offset frequency of ±10 MHz: 2 dBm or less (2) In the band of the offset frequency from 15 MHz to less than 20 MHz: -25dBm/MHz or less (3) In the band of the offset frequency from 20 MHz to less than 25 MHz: -30 dBm/MHz or less
20 MHz	(1) In the band of ±10MHz from the offset frequency of ±20 MHz: 3 dBm or less (2) In the band of the offset frequency from 30 MHz to less than 35 MHz: -25 dBm/MHz or less (3) In the band of the offset frequency from 35 MHz to less than 50 MHz: -30 dBm/MHz or less

Table 2.2.1.2-2 Adjacent Channel Leakage (ACL) Power and Outband Unwanted Emission of BS

Channel spacing	Allowed levels of Adjacent channel leakage power (1), and Outband unwanted emission (2)
2.5 MHz	(1) In the band of ±1.25 MHz from the offset frequency of ±2.5 MHz: 3 dBm or less (2) In the band of the offset frequency from 3.75 MHz to less than 6.25 MHz: -5.25 dBm/MHz or less
5 MHz	(1) In the band of ±2.5 MHz from the offset frequency of ±5 MHz: 3 dBm or less (2) In the band of the offset frequency from 7.5 MHz to less than 12.5 MHz: -15.7 dBm/MHz or less
10 MHz	(1) In the band of ±5 MHz from the offset frequency of ±10 MHz: 3 dBm or less (2) In the band of the offset frequency from 15 MHz to less than 25 MHz: -22 dBm/MHz or less
20 MHz	(1) In the band of ±10MHz from the offset frequency of ±20 MHz: 6 dBm or less (2) In the band of the offset frequency from 30 MHz to less than 50 MHz: -22 dBm/MHz or less

Note about the four items of ACL Power (1) in the above BS table: (NT No.435, 2012)

In the case the multiple carriers (with 2.5MHz, 5MHz, 10MHz, or 20MHz channel spacing) are transmitted from single transmission equipment, following conditions are applied.

(a) In regard to the frequency range which is higher than the highest carrier of the simultaneous multiple carriers, the highest carrier is taken as the measurement object. In regard to the frequency range which is lower than the lowest carrier of the multiple carriers, the lowest carrier is taken as the measurement object.

(b) Between the frequency range of simultaneous transmission of non-contiguous multiple carriers, the specification shall be met per each carrier. (In the case that the band of one single carrier and the band of other carriers are overlapped, either the allowable level specified for the one single carrier or the allowable levels specified for the other concerned carriers are applied.)

Note about the four items of Outband Unwanted Emission (2) in the above BS table: (NT No.435, 2012)

In the case the multiple carriers (with 2.5MHz, 5MHz, 10MHz, or 20MHz channel spacing) are transmitted from single transmission equipment, following conditions are applied.

(c) In regard to the frequency range which is higher than the highest carrier of the simultaneous multiple carriers, the highest carrier is taken as the measurement object. In regard to the frequency range which is lower than the lowest carrier of the multiple carriers, the lowest carrier is taken as the measurement object.

(d) Between the frequency range of simultaneous transmission of non-contiguous multiple carriers, the specification shall be met per each carrier. (In the case that the band of one single carrier and the band of other carriers are overlapped, either the allowable level specified for the one single carrier or the allowable levels specified for the other concerned carriers are applied.)

However, this requirement is not applicable in the case that the frequency range of this table about the single carrier is overlapped with the range of ACL Power.

2.2.1.3 Transmission Intermodulation (NT No. 435, 2012)

Intermodulation characteristic of BS and RS (only RS transmitted to MS) shall be as follows.

(1) Channel spacing of 2.5 MHz

Under the condition of rated output desired wave, when the interference wave of +/-2.5 MHz and +/-5 MHz away from the desired wave is added by the transmission power of 30 dB lower than the rated output desired wave, intermodulation power shall not exceed the allowed values of the adjacent channel leakage power and the outband unwanted emission (2.2.1.2).

(2) Channel spacing of 5 MHz

Under the condition of rated output desired wave, when the interference wave of +/-5 MHz and +/-10 MHz away from the desired wave is added by the transmission power of 30 dB lower than the rated output desired wave, intermodulation power shall not exceed the allowed values of the adjacent channel leakage power and the outband unwanted emission (2.2.1.2).

(3) Channel spacing of 10 MHz

Under the condition of rated output desired wave, when the interference wave of +/-10 MHz and +/-20 MHz away from the desired wave is added by the transmission power of 30 dB lower than the rated output desired wave, intermodulation power shall not exceed the allowed values of the adjacent channel leakage power and the outband unwanted emission (2.2.1.2).

(4) Channel spacing of 20 MHz

Under the condition of rated output desired wave, when the interference wave of +/-20 MHz and +/-40 MHz away from the desired wave is added by the transmission power of 30 dB lower than the rated output desired wave, intermodulation power shall not exceed the allowed values of the adjacent channel leakage power and the outband unwanted emission (2.2.1.2).

2.2.1.4 Transmission Synchronization (NT No. 435, 2012)

(1) Transmission burst cycle

Within 2.5 msec, 5 msec, 10 msec

(2) Transmission burst length

Transmission burst length shall be as follows.

Table 2.2.1.4-1 Transmission Burst Length

BS and Low Power Repeater to MS	MS and Low Power Repeater to BS
Within M×625μs (Note1)	Within N×625μs (Note1)
Within P×1,000μs (Note2)	Within Q×1,000μs (Note2)

Note1: M+N=4, 8, or 16 (M, N is a positive integer)

Note2: P+Q=5, or 10 (P, Q is a positive number, including the decimal)

Note3: Transmission burst length for the radio frequency of over 2575 MHz to 2595 MHz or less shall be equal to the transmission burst length for the radio equipment in BS and MS for the use of the frequency of over 2545 MHz to 2575 MHz or less or over 2595 MHz to 2625 MHz.

Note4: The transmitter in RS

- Transmission to BS should be referring the value for MS.
- Transmission to MS should be referring the value for BS.

Note5: Such burst length is not defined in the standard of XGP referred to Chapter 3 at this time.

2.2.1.5 Carrier off Time Leakage Power (ORE,Article 49.29)

(1) Standards

a) MS: -30 dBm or less

b) BS: -30 dBm or less

c) Low Power Repeater: -30 dBm or less

In the transmission band at the antenna terminal port.

2.2.1.6 Tolerance Limits of the Intensity of Unwanted Emission in Spurious Domain (NT No. 435, 2012)

(1) Standards

The tolerance limits of the intensity of unwanted emission of the transmitter in RS shall apply as follows.

- Transmission to BS:

  The value for MS shown in the Table 2.8 should be referred.

- Transmission to MS:

  The value for BS shown in the Table 2.9 should be referred.

Table 2.2.1.6-1 Tolerance Limits of the Intensity of Unwanted Emission in Spurious Domain of MS and the Low Power Repeater

Frequency	Tolerance limits of the intensity
From 9 kHz to less than 150 kHz	Average power for arbitrary 1 kHz band is -13 dBm or less.
From 150 kHz to less than 30 MHz	Average power for arbitrary 10 kHz band is -13 dBm or less.
From 30 MHz to less than 1000 MHz	Average power for arbitrary 100 kHz band is -13 dBm or less.
From 1000 MHz to less than 2505 MHz	Average power for arbitrary 1 MHz band is -13 dBm or less.
From 2505 MHz to less than 2530 MHz	1. The MS that communicates with BS of which absolute gain of transmission antenna

	be equal to 17 dBi or less (i) The absolute gain of transmission antenna is equal to 4 dBi or less Average power for arbitrary 1 MHz band is -30 dBm or less. (ii) The absolute gain of transmission antenna is over 4 dBi to 10 dBi or less Average power for arbitrary 1 MHz band is -70 dBm or less. (iii) The absolute gain of transmission antenna is over 10 dBi Average power for arbitrary 1 MHz band is -68 dBm or less. 2. The MS that communicates with BS of which absolute gain of transmission antenna exceed 17 dBi. Average power for arbitrary 1 MHz band is -61 dBm or less.
From 2530 MHz to less than 2535 MHz	1. The MS that communicates with BS of which absolute gain of transmission antenna be equal to 17 dBi or less. (i) The absolute gain of transmission antenna is equal to 4 dBi or less. Average power for arbitrary 1 MHz band is equal to -25 dBm or less F shall be within the frequency band described in the left column. (ii) The absolute gain of transmission antenna is over 4 dBi to 10 dBi or less. Average power for arbitrary 1 MHz band is -70 dBm or less. (iii) The absolute gain of transmission antenna is over 10 dBi. Average power for arbitrary 1 MHz band is -68 dBm or less.

	2. The MS that communicates with BS of which absolute gain of transmission antenna exceed 17 dBi. Average power for arbitrary 1 MHz band is -61 dBm or less.
From 2535 MHz to less than 2655 MHz (Note)	Average power for arbitrary 1 MHz band is -30 dBm or less.
2655 MHz or more	Average power for arbitrary 1 MHz band is -13 dBm or less.

(Note) Applied to the cases below only:

- For radio equipment with channel spacing of 2.5 MHz: Offset frequency of 6.25 MHz or more
- For radio equipment with channel spacing of 5 MHz: Offset frequency of 12.5 MHz or more
- For radio equipment with channel spacing of 10 MHz: Offset frequency of 25 MHz or more
- For radio equipment with channel spacing of 20 MHz: Offset frequency of 50 MHz or more

Table 2.2.1.6-2 Tolerance Limits of the Intensity of Unwanted Emission in Spurious Domain of BS

Frequency	Tolerance limits of the intensity
From 9 kHz to less than 150 kHz	Average power for arbitrary 1 kHz band is -13 dBm or less.
From 150 kHz to less than 30 MHz	Average power for arbitrary 10 kHz band is -13 dBm or less.
From 30 MHz to less than 1000 MHz	Average power for arbitrary 100 kHz band is -13 dBm or less.
From 1000 MHz to less than 2505 MHz	Average power for arbitrary 1 MHz band is -13 dBm or less.
From 2505 MHz to less than 2535 MHz	Average power for arbitrary 1 MHz band is -42 dBm or less.
From 2535 MHz to less than 2655 MHz (Note)	Average power for arbitrary 1 MHz band is -22 dBm or less.
2655 MHz or more	Average power for arbitrary 1 MHz band is -13 dBm or less.

(Note) Applied to the cases below only:

- For radio equipment with channel spacing of 2.5 MHz: Offset frequency of 6.25 MHz or more
- For radio equipment with channel spacing of 5 MHz: Offset frequency of 12.5 MHz or more
- For radio equipment with channel spacing of 10 MHz: Offset frequency of 25 MHz or more
- For radio equipment with channel spacing of 20 MHz: Offset frequency of 50 MHz or more

Note about "Unwanted Emission in Spurious Domain" in the above BS table: (NT No.435, 2012)

In the case the multiple carriers (with 2.5MHz, 5MHz, 10MHz, or 20MHz channel spacing) are transmitted from single transmission equipment, following conditions are applied.

(a) In regard to the frequency range which is higher than the highest carrier of the simultaneous multiple carriers, the highest carrier is taken as the measurement object. In regard to the frequency range which is lower than the lowest carrier of the multiple carriers, the lowest carrier is taken as the measurement object.

(b) Between the frequency range of simultaneous transmission of non-contiguous multiple carriers, the specification shall be met per each carrier.

2.2.1.7 However, this requirement is not applicable in the case that frequency range of this Note about the single carrier is overlapped with the range of ACL Power or with the range of the Outband Unwanted Emission.Allowed Value for Occupied Bandwidth (ORE, Article 6,Table 2)

(1) Standards

2.5 MHz system: 2.5 MHz or less

5 MHz system: 5 MHz or less

10 MHz system: 10 MHz or less

20 MHz system: 20 MHz or less

If this allowed value is applied, it shall be added to the types of radio wave as prefix.

2.2.1.8 Frequency Stability (ORE, Article 5,Table 1)

(1) Standards

Frequency error:

MS: $\pm 3 \times 10^{-6}$ or less

BS: $\pm 3 \times 10^{-6}$ or less

Low Power Repeater: $\pm 3 \times 10^{-6}$ or less

2.2.1.9 Transmission Antennas (ORE,Article 49.29)

a) MS: 25 dBi or less

b) BS: 25 dBi or less

c) Low Power Repeater: 4 dBi or less

2.2.1.10 SAR (ORE,Article 14.2) (NT 435, 2012)

MS shall ensure that specific absorption rate (SAR) of the radio wave emitted from a MS in the head of a human body is 2 watts per kilogram or less. SAR means the value that the energy which a body tissue of 10 grams exposed to radio wave absorbed for 6 minutes is divided by 10 grams and 6 minutes.

But MS which stipulated in the NT is not applicable.

2.2.1.11 System condition (only Non-regenerative repeating of Low Power Repeater)

Maximum number of repeaters per BS would be about 100.

2.2.1.12 Out of band gain (only Non-regenerative repeating of Low Power Repeater) (NT 435, 2012)

In case of Non-regenerative repeating, out of band gain refers to the gain of the repeater outside the pass band. The gain outside the pass band shall not exceed the maximum level specified in the Table 2.10.

Table 2.2.1.12-1 Out of band gain limits

Frequency Offset from the Edge Frequency	Maximum Gain
5MHz	35dB
10MHz	20dB
40MHz	0dB

2.2.2 Reception Characteristics

2.2.2.1 Sensitivity

(1) Definition

Reception sensitivity is the minimum receiving power measured by antenna terminal which is required to receive QPSK modulated signal with the specified quality (more than 95% of the maximum throughput). It shall not exceed the following value (reference sensitivity) in static characteristic.

(2) Standards

In static characteristic,

MS: -94 dBm or less

BS: -101.5 dBm or less

Low Power Repeater: -94 dBm or less (only regenerative repeating)

2.2.2.2 Adjacent Channel Selectivity

(1) Definition

Adjacent channel selectivity is a measure of the receiver ability to receive a desired signal in the existence of modulated interference signal assigned to adjacent carrier frequency. When the desired signal and modulated interference signal in adjacent frequency band are added by the following condition, QPSK modulated signal shall be received with the specified quality (more than 95% of the maximum throughput).

(2) Standards

In static characteristic,

MS: desired signal reference sensitivity +14 dB, modulated interference signal -54.5 dBm

BS: desired signal reference sensitivity +6 dB, modulated interference signal -52 dBm

Low Power Repeater: desired signal reference sensitivity +14 dB, modulated interference signal -54.5 dBm (only regenerative repeating)

2.2.2.3 Intermodulation Characteristic

(1) Definition

Intermodulation characteristic is a measure of the receiver ability to receive a desired signal in the existence of two non-modulated interference signals which are equal in power and can generate the third-order intermodulation or either modulated interference signal of such two interference signals. When the desired signal and both of non-modulated and modulated interference signals, which can generate the third-order

intermodulation, are added by the following condition, QPSK modulated signal shall be received with the specified quality (more than 95% of the maximum throughput).

(2) Standards

In static characteristic,

MS: desired signal: reference sensitivity +9 dB

non-modulated interference signal (adjacent channel): -46dBm

modulated interference signal (second adjacent channel): -46dBm

BS: desired signal: reference sensitivity +6 dB

non-modulated interference signal (adjacent channel): -52 dBm

modulated interference signal (second adjacent channel): -52 dBm

Low Power Repeater: desired signal: reference sensitivity +9 dB

non-modulated interference signal (adjacent channel): -46dBm

modulated interference signal (second adjacent channel): -46dBm

(only regenerative repeating)

2.2.2.4 Spurious Response Immunity

(1) Definition

Spurious response is a measure of the receiver ability to receive a desired signal in the existence of a non-modulated interference signal. When the desired signal and non-modulated interference signal are added by the following condition, QPSK modulated signal shall be received with the specified quality (more than 95% of the maximum throughput).

(2) Standards

In static characteristic,

MS: desired signal reference sensitivity +9 dB, non-modulated interference signal: -44 dBm

BS: desired signal reference sensitivity +6 dB, non-modulated interference signal: -45 dBm

Low Power Repeater: desired signal reference sensitivity +9 dB, non-modulated interference signal: -44 dBm (only regenerative repeating)

2.2.2.5 Conducted Spurious Component (ORE,Article 24)

(1) Definition

Conducted spurious component is spurious emissions while reception, which are any emissions present at the antenna terminals of the equipment.

(2) Standards

a) Only BS with absolute gain of transmission antenna of 17 dBi or less, MS with absolute gain of transmission antenna of 4 dBi or less, and RS with absolute gain for BS of 4 dBi or less.

Table 2.2.2.5-1 BS (with Antenna of 17 dBi or less) and MS(with Antenna of 4dBi or less)

Frequency bands	Conducted spurious component
From 9 kHz to less than 150 kHz	Average power for arbitrary 1 kHz band is -54 dBm or less.
From 150 kHz to less than 30 MHz	Average power for arbitrary 10 kHz band is -54 dBm or less.
From 30 MHz to less than 1000 MHz	Average power for arbitrary 100 kHz band is -54 dBm or less.
1000 MHz or more	Average power for arbitrary 1 MHz band is -47 dBm or less.

b) Receiving equipment in BS with absolute gain of transmission antenna of over 17 dBi, MS with absolute gain of transmission antenna of over 4 dBi, and a land mobile relay station with absolute gain of transmission antenna for BS of over 4 dBi shall comply with the requirement described in the following table.

Table 2.2.2.5-2 BS (with Antenna of over 17 dBi) and MS (with Antenna of over 4dBi)

Frequency band	Conducted spurious component
From 9 kHz to less than 150 kHz	Average power for arbitrary 1 KHz band is -54 dBm or less.
From 150 kHz to less than 30 MHz	Average power for arbitrary 10 kHz band is -54 dBm or less.
From 30 MHz to less than 1000 MHz	Average power for arbitrary 100 kHz band is -54 dBm or less.
From 1000 MHz to less than 2505 MHz	Average power for arbitrary 1 MHz band is -47 dBm or less.
From 2505 MHz to less than 2535 MHz	i) BS Average power for arbitrary 1 MHz band is -61 dBm or less. ii) MS (1) MS with absolute gain of transmission antenna of over 4 dBi to 10 dBi or less (only a MS that communicate with the BS of which absolute gain of transmission antenna is equal to 17 dBi or less) Average power for arbitrary 1 MHz band is -70 dBm or less. (2) MS with absolute gain of transmission antenna of over 10 dBi (only MS that communicate with BS of which absolute gain of transmission antenna is equal to 17 dBi or less) Average power for arbitrary 1 MHz band is -68 dBm or less. (3) MS other than above (1) and (2) (only a MS that communicate with BS of which absolute gain of transmission antenna exceeds 17 dBi) Average power for arbitrary 1 MHz band is

	-61 dBm or less. iii) RS (1) RS with absolute gain of transmission antenna to BS of over 10 dBi (only RS that communicate with BS of which absolute gain of transmission antenna is equal to 17 dBi or less),items ii) (2) shall apply for receiving the radio wave from BS and a)item shall apply for receiving the radio wave from MS. (2) RS other than above (1) (only RS that communicate with BS of which absolute gain of transmission antenna exceeds 17 dBi), items ii) (3) shall apply for receiving the radio wave from BS and items i) shall apply for receiving the radio wave from MS.
2535 MHz or more	Average power for arbitrary 1 MHz band is -47 dBm or less.

Chapter 3 Physical and MAC Layer Specifications

In this chapter, Physical and MAC layer of XGP in Japan is specified.

This specification is defined by following Attachment 3.

Attachment 3 : “XGP Specifications”

This Attachment 3 is reproduced from "A-GN4.00-03-TS “XGP Specifications” which is standardized by XGP Forum.

This Attachment 3 is reproduced without any modification from original document.

Chapter 4 Japanese specific matters

In this chapter, it is listed the items of Attachment 3 which are not adopted by this standard.

The following items are not adopted in this standard because they do not comply with the Japanese Regulations.

Table 4.1 Points of difference

Attachment 3 section number	Marks
2.3.1	There is a description of 22.5/25/30 MHz system bandwidth.
2.3.4	There is a description of 22.5/25/30 MHz system bandwidth.
2.4.1	Table 2.2, there is a description of 22.5/25/30 MHz system bandwidth in "Number of subchannels".
2.4.3.2	Figure 2.8, there is an expression of 22.5/25/30 MHz system bandwidth.
2.5	Figure 2.11, m equal 22/24/27/28/29/30 express 22.5/25/30 MHz system bandwidth. Table 2.3, there is a description of 22/5,25/30 MHz system bandwidth.
2.6	Figure 2.12, m equal 22/24/27/28/29/30 express 22.5/25/30 MHz system bandwidth
3.2.3	Table 3.1, there is a description of 22.5/25/30 MHz system bandwidth.
5.5.6.1.2	"Assignment PRU Number = 128" express 30MHz system bandwidth
5.5.6.1.3	"Assignment PRU Number = 128" express 30MHz system bandwidth
5.5.6.1.4	"Assignment PRU Number = 128" express 30MHz system bandwidth
5.5.6.1.5	"Assignment PRU Number = 128" express 30MHz system bandwidth
5.5.6.1.6	"Assignment PRU Number = 128" express 30MHz system bandwidth
7.3.3.6	"SCH = 128" in MAP Origin express 30MHz system bandwidth
7.3.3.7	"SCH = 128" in MAP Origin express 30MHz system bandwidth
7.3.3.8	"SCH = 128" in MAP Origin express 30MHz system bandwidth
7.3.3.15	"Assignment PRU Number = 128" express 30MHz system bandwidth "SCH = 128" in MAP Origin express 30MHz system bandwidth
7.3.3.22	"SCH = 128" in MAP Origin express 30MHz system bandwidth
10	FDD description in reference documents do not comply with the Japanese Regulations
Annex X	They comply with the Taiwan Regulations

Chapter 5 Measurement Method

As for the items stipulated in Ordinance Concerning Technical Regulations Conformity Certification etc. of Specified Radio Equipment Appendix Table No.1 item 1(3), measurement methods are specified by MIC Notification (Note) or a method that surpasses or is equal to the method.

Note: This Notification refers to MIC Notification No.88 "The Testing Method for the Characteristics Examination" (January 26, 2004) as of the date of the revision of this standard version 2.0 (issued at July, 2011). Thereafter, the latest version of Notification would be applied if this Notification or contents of this Notification would be revised.

Attachment 1 List of Essential Industrial Property Rights (selection of option 1)

特許出願人 PATENT HOLDER	発明の名称 NAME OF PATENT	出願番号等 REGISTRATION NO./ APPLICATION NO.	備考 （出願国名） REMARKS
(N/A)	(N/A)	(N/A)	(N/A)

Attachment 2 List of Essential Industrial Property Rights (selection of option 2)

特許出願人 PATENT HOLDER	発明の名称 NAME OF PATENT	出願番号等 REGISTRATION NO./ APPLICATION NO.	備考 （出願国名） REMARKS
Hitachi, Ltd.*10	A comprehensive confirmation form has been submitted with regard to ARIB STD-T95 Ver.1.0		
KYOCERA*10	A comprehensive confirmation form has been submitted with regard to ARIB STD-T95 Ver.1.0		
NetIndex Inc. *10	A comprehensive confirmation form has been submitted with regard to ARIB STD-T95 Ver.1.0		
NTT DoCoMo Inc.*10	A comprehensive confirmation form has been submitted with regard to ARIB STD-T95 Ver.1.0		
Oki Electric Industry Co.,Ltd.*10	A comprehensive confirmation form has been submitted with regard to ARIB STD-T95 Ver.1.0		
Qualcomm Inc.*10	A comprehensive confirmation form has been submitted with regard to ARIB STD-T95 Ver.1.0		
SANYO Electric Co.;Ltd*10.	A comprehensive confirmation form has been submitted with regard to ARIB STD-T95 Ver.1.0		
WILLCOM Inc.*10	A comprehensive confirmation form has been submitted with regard to ARIB STD-T95 Ver.1.0		

*10:These patents are applied to the part defined by ARIB STD-T95 Ver.1.0.

Approved by the 70th Standard Assembly
(selection of option 2)

Attachment 2 List of Essential Industrial Property Rights

特許出願人 PATENT HOLDER	発明の名称 NAME OF PATENT	出願番号等 REGISTRATION NO./ APPLICATION NO.	備考 （出願国名） REMARKS
TOSHIBA CORPORATION.*10	A comprehensive confirmation form has been submitted with regard to ARIB STD-T95 Ver.1.0		

*10:These patents are applied to the part defined by ARIB STD-T95 Ver.1.0.

Attachment 2 List of Essential Industrial Property Rights (selection of option 2)

特許出願人 PATENT HOLDER	発明の名称 NAME OF PATENT	出願番号等 REGISTRATION NO./ APPLICATION NO.	備考 （出願国名） REMARKS
㈱日立コミュニケーションテクノロジー *[10]	インタリーブ方法及び無線通信装置	特願2007-223384	

*[10]:These patents are applied to the part defined by ARIB STD-T95 Ver.1.0.

Attachment 2 List of Essential Industrial Property Rights

Approved by the 73rd Standard Assembly
(selection of option 2)

特許出願人 PATENT HOLDER	発明の名称 NAME OF PATENT	出願番号等 REGISTRATION NO./ APPLICATION NO.	備考 （出願国名） REMARKS
QUALCOMM Incorporated *[10]	Synchronized Pilot Reference Transmission for a Wireless Communication System	JP2003-529971	US 20080008136, US 7,289,473, BR, CN, DE, EP, ES, FI, FR, GB, HK, IT, KR, SE, WO
	Reducing radio link supervision time in a high data rate system	JP2003-524965	AU, BR, CA, CN, DE, EP, FI, FR, GB, HK, ID, IL, IN, KR, MX, NO, RU, SE, SG, TW, UA, US, WO
	A method and an apparatus for a quick retransmission of signals in a communication system	JP2003-533078	US 6,694,469, US 7,127,654, US 20070168825, AU, BR, CA, CN, EP, HK, ID, IL, IN, KR, MX, NO, WO, RU, SG, TW, UA
	Method and apparatus for fast closed-loop rate adaptation in a high rate packet data transmission	JP2004-515932	US 7,245,594, US 20070064646, US 20070263655, AU, BR, CA, CN, EP, HK, ID, IL, IN, JP, KR, MX, NO, RU, SG, TW, UA, WO
	Method and apparatus for controlling data rate in a wireless communication system	JP2005-507208	US, CN, DE, EP, ES, FI, FR, GB, IT, KR, SE, SG, TW, WO
	Method and Apparatus for High Rate Packet Data and Low Delay Data Transmissions	JP 2004-514369	US 7,068,683, US 20060187877, AU, BR, CA, CN, EP, HK, ID, IL, IN, KR, MX, NO, RU, SG, TW, UA, WO

*[10]: These patents are applied to the part defined by ARIB STD-T95 Ver.1.0.

Attachment 2 List of Essential Industrial Property Rights (selection of option 2)

特許出願人 PATENT HOLDER	発明の名称 NAME OF PATENT	出願番号等 REGISTRATION NO./ APPLICATION NO.	備考 （出願国名） REMARKS
QUALCOMM Incorporated *[10]	Coding scheme for a wireless communication system	JP2004-535694	US 6,961,388, US 20050276344, BR, CN, EP, HK, KR, TW, WO
	Closed-Loop Rate Control for a Multi-Channel Communication System	JP2006-504372	US, AU, BR, CA, CN, EP, HK, ID, IL, IN, KR, MX, RU, TW, UA, WO
	Multicarrier Transmission Using a Plurality of Symbol Lengths	JP2006-504367	US, AU, BR, CA, CN, EP, HK, ID, IL, IN, KR, MX, RU, TW, UA, WO
	Method, Station and Medium Storing a Program for a Priority Based Scheduler with Variable Scheduling Periods and Variable Scheduled Periods	JP2007-508791	US, BR, CA, CN, EP, HK, IN, KR, RU, TW, WO
	System and method for diversity interleaving	JP2008-508815	US, AU, BR, CA, CN, EG, EP, HK, ID, IL, IN, KR, MX, NO, NZ, PH, RU, SG, UA, VN, WO, ZA
	Unified pulse shaping for multi-carrier and single-carrier waveforms	JP2008-511208	US, AR, CA, CN, EP, HK, IN, KR, MY, TW, WO
	Pilot Transmission and Channel Estimation for a Communication System Utilizing Frequency Division Multiplexing	JP2008-536359	US, AR, AU, BR, CA, CL, CN, EP, HK, ID, IL, IN, KR, MX, MY, NO, NZ, PH, RU, SG, TW, UA, VN, WO
	Power control for serving sector	JP B0008P0995	US, AR, AU, BR, CA, CN, EP, ID, IL, IN, KR, MX, MY, NO, NZ, PH, RU, SG, TW, UA, VN, WO

*[10]: These patents are applied to the part defined by ARIB STD-T95 Ver.1.0.

Attachment 2 List of Essential Industrial Property Rights (selection of option 2)

特許出願人 PATENT HOLDER	発明の名称 NAME OF PATENT	出願番号等 REGISTRATION NO./ APPLICATION NO.	備考 （出願国名） REMARKS
QUALCOMM Incorporated *[10]	Method and apparatus for sending signaling information via channel IDS	WO07101041	US, BR, CA, CN, EP, IN, JP, KR, RU, SG, TW
	Method and apparatus for efficient reporting of information in a wireless communication system	WO07075744	US, CN, EP, IN, JP, KR, TW
	Mapping of subpackets to resources in a communication system	WO08086074	US, TW
	Apparatus and method for uplink power control of wireless communications	WO08101053	US, TW
	A power control subsystem	JP2002-501689	US 5,991,284, CN, DE, US 6,240,071, US 20010010684, EP, FR, GB, HK, JP, KR, WO
	Apparatus and Method for Reducing Power Consumption in a Mobile Communications Receiver	JP3193380	US 5,509,015, AU, BR, BG, CA, DE, DK, KP, EP, FI, FR, GB, HK, HU, IE, IL, IT, KR, MX, NL, WO, CN, RU, ZA, SE, SK
	Channel structure for communication systems	JP4152584	US 6,377,809, US 09/503,401, US 6,167,270, US 6,526,030, AU, BR, CA, CL, RU, DE, EP, FI, FR, GB, HK, ID, IT, KR, MX, NO, WO, CN, TW, SE, SG, UA

*[10]: These patents are applied to the part defined by ARIB STD-T95 Ver.1.0.

Attachment 2 List of Essential Industrial Property Rights

Approved by the 75th Standard Assembly
(selection of option 2)

特許出願人 PATENT HOLDER	発明の名称 NAME OF PATENT	出願番号等 REGISTRATION NO./ APPLICATION NO.	備考 （出願国名） REMARKS
QUALCOMM Incorporated *[13]	A comprehensive confirmation form has been submitted with regard to ARIB STD-T95 Ver.1.3.		

*[13]: This patent is applied to the revised part of ARIB STD-T95 Ver.1.3.

Attachment 2 List of Essential Industrial Property Rights

Approved by the 80th Standard Assembly
(selection of option 2)

特許出願人 PATENT HOLDER	発明の名称 NAME OF PATENT	出願番号等 REGISTRATION NO./ APPLICATION NO.	備考 （出願国名） REMARKS
QUALCOMM Incorporated *[20]	A comprehensive confirmation form has been submitted with regard to ARIB STD-T95 Ver.2.0.		

*[20]: This patent is applied to the revised part of ARIB STD-T95 Ver.2.0.

Attachment 2 List of Essential Industrial Property Rights

Approved by the 83rd Standard Assembly
(selection of option 2)

特許出願人 PATENT HOLDER	発明の名称 NAME OF PATENT	出願番号等 REGISTRATION NO./ APPLICATION NO.	備考 （出願国名） REMARKS
QUALCOMM Incorporated *[21]	A comprehensive confirmation form has been submitted with regard to ARIB STD-T95 Ver.2.1.		

*[21]: This patent is applied to the revised part of ARIB STD-T95 Ver.2.1.

Attachment 2 List of Essential Industrial Property Rights (selection of option 2)

特許出願人 PATENT HOLDER	発明の名称 NAME OF PATENT	出願番号等 REGISTRATION NO./ APPLICATION NO.	備考 （出願国名） REMARKS
QUALCOMM Incorporated *[20]	Method, Apparatus and System for Signal Prediction	JP2004-506206	US6,775,802; AU; BR; CA; CN; EP; HK; ID; IN; KR; MX; SG; VN
	Method for performing radio resource level registration in a wireless communication system	JP4607411	US7,155,222; US7,773,987; US8,010,104; BE; BR; CN; DE; DK; EP; ES; FI; FR; GB; HK; IE; IT; KR; NL; SE; TW
	Handoff method for digital base stations with different spectral capabilities	JP4795608	US6,535,739; US6,853,843; US7,151,933; US7,373,149; AU; BE; BR; CA; CN; DE; EP; ES; FI; FR; GB; HK; ID; IE; IL; IN; IT; KR; MX; NL; NO; RU; SE; SG; TW; UA
	Multiplexing of real time services and non-real time services for OFDM systems	JP2004-503181	US6,952,454; US7,751,492; US7,813,441; US7,664,193; US20100142638; BR; CN; EP; HK; KR; TW
	Method and apparatus for adaptive transmission control in a high data rate communication system	JP2003-531518	US7,088,701; BR; CN; DE; EP; ES; FI; FR; GB; HK; IT; KR; NL; SE; TW
	Method and Apparatus for Multiplexing High-Speed Packet Data Transmission with Voice/Data Transmission	JP4068455	US6,775,254; US20040240401; JP; AU; BR; CA; CN; DE; EP; ES; FR; GB; HK; ID; IL; IN; IT; KR; MX; NO; RU; SG; TW; UA

*[20]: These patents are applied to the revised part of ARIB STD-T95 Ver.2.0.

Attachment 2 List of Essential Industrial Property Rights (selection of option 2)

特許出願人 PATENT HOLDER	発明の名称 NAME OF PATENT	出願番号等 REGISTRATION NO./ APPLICATION NO.	備考 （出願国名） REMARKS
QUALCOMM Incorporated *[20]	GPS Satellite Signal Acquisition Assistance System and Method in a Wireless Communications Network	JP4018535	US7,254,402; USRE42,543; AU; CA; CN; EP; HK; ID; IL; IN; KR; MX; SG; VN
	Method and Apparatus for Gated ACK/NAK Channel in a Communication System	JP2004-512708	US7,042,869; AU; BR; CA; CL; CN; DE; EP; ES; FI; FR; GB; HK; ID; IL; IN; IT; KR; MX; NL; NO; NZ; RU; SE; SG; TW; UA
	Method and apparatus for satellite positioning system based time measurement	JP4316676	US5,812,087; US6,052,081; US6,239,742; JP; BR; CH; CN; DE; DK; EP; ES; FI; FR; GB; GR; HK; IE; PT; SE
	Method and system for using altitude information in a satellite positioning system	JP2002-532679	US6,061,018; US6,307,504; JP; AU; BE; BR; CA; CN; DE; EP; ES; FI; FR; GB; HK; ID; IE; IL; IN; IT; KR; MX; NL; SE; SG
	Method and apparatus for operating a satellite positioning system receiver	JP2002-530628	US6,104,338; JP; AU; BE; BR; CA; CN; DE; EP; ES; FI; FR; GB; HK; ID; IE; IL; IN; IT; KR; MX; NL; SE; SG
	Satellite positioning system augmentation with wireless communication signals	JP2002-512373	US5,999,124; JP; AU; BR; CA; CN; DE; EP; ES; FI; FR; GB; HK; ID; IL; IN; IT; KR; MX; NL; SE; SG

*[20]: These patents are applied to the revised part of ARIB STD-T95 Ver.2.0.

Attachment 2 List of Essential Industrial Property Rights (selection of option 2)

特許出願人 PATENT HOLDER	発明の名称 NAME OF PATENT	出願番号等 REGISTRATION NO./ APPLICATION NO.	備考 （出願国名） REMARKS
QUALCOMM Incorporated *[20]	Method and apparatus for determining a data rate in a high rate packet data wireless communications system	JP4083578	US6,973,098; US20050254465; AT; AU; BE; BR; CA; CH; CN; DE; DK; EP; ES; FI; FR; GB; GR; HK; ID; IE; IL; IN; IT; KR; MX; NL; NO; PT; RU; SE; SG; TW; UA
	Method and apparatus for handoff of a wireless packet data services connection	JP4194840	US7,079,511; US7,860,061; US7,561,555; AU; BR; CA; CN; DE; EP; FI; FR; GB; HK; ID; IL; IN; IT; KR; MX; NO; RU; SE; SG; TW; UA
	Method and apparatus for utilizing channel state information in a wireless communication system	JP4593878	US6,771,706; US7,590,182; US7,949,060; US7,411,929; JP; BE; BR; CN; DE; EP; ES; FI; FR; GB; HK; IE; IT; KR; LU; NL; SE; TW
	Method and apparatus for link quality feedback in a wireless communication system	JP4723617	US6,985,453; JP; AU; BR; CA; CN; DE; EP; ES; FI; FR; GB; HK; ID; IE; IL; IN; IT; KR; MX; NL; NO; RU; SG; TW; UA
	Method and apparatus for testing assisted position location capable devices	JP4593925	US6,760,582; AU; BR; CN; EP; HK; IL; IN; KR; RU
	Synchronization of stored service parameters in a communication system	JP4426187	US7,499,698; US7,881,714; US7,747,283; US7,778,631; JP; BE; BR; CA; CN; DE; EP; ES; FI; FR; GB; HK; IE; IN; IT; KR; NL; SE; TW

*[20]: These patents are applied to the revised part of ARIB STD-T95 Ver.2.0.

Attachment 2 List of Essential Industrial Property Rights (selection of option 2)

特許出願人 PATENT HOLDER	発明の名称 NAME OF PATENT	出願番号等 REGISTRATION NO./ APPLICATION NO.	備考 （出願国名） REMARKS
QUALCOMM Incorporated *[20]	Ceasing transmission of data rate control information in a CDMA communication system when the mobile station transmits to the idle open state	JP4236579	US7,103,021; US7,924,781; US20110243082; BR; CN; DE; EP; FR; GB; HK; KR; NO; TW
	Method and apparatus for call setup latency reduction	JP2005-525713	US7,180,879; US7,417,976; US20070086391; US7,986,674; US7,894,403; JP; BE; BG; CN; CZ; DE; EP; ES; FI; FR; GB; HK; IE; IN; IT; KR; NL; SE; TW
	Method and apparatus for time-aligning transmissions from multiple base stations in a CDMA communication System	JP4546081	US6,775,242; AU; BE; BG; BR; CA; CN; CZ; DE; EP; ES; FI; FR; GB; HK; ID; IE; IN; IT; KR; MX; NL; NO; SE; SG; TW
	Method and apparatus for security in a data processing system	JP4282992	US20020141591; JP; BR; CA; CN; EP; HK; KR; MX; TW
	Method and system for signaling in broadcast communication system	JP4307998	US6,980,820; US7,415,283; US7,689,226; JP; BE; BG; CN; CZ; DE; EP; ES; FI; FR; GB; HK; IE; IN; IT; KR; NL; SE; TW
	Method and apparatus for data packet transport in a wireless communications system using an internet protocol	JP2008-211793	US7,697,523; US20100142432; JP; BR; CN; EP; HK; KR; TW
	Method and apparatus for security in a data processing system	JP4732687	US7,352,868; US20080226073; AU; BR; CA; CN; EP; HK; ID; IL; IN; KR; MX; RU; SG; TW

*[20]: These patents are applied to the revised part of ARIB STD-T95 Ver.2.0.

Attachment 2 List of Essential Industrial Property Rights (selection of option 2)

特許出願人 PATENT HOLDER	発明の名称 NAME OF PATENT	出願番号等 REGISTRATION NO./ APPLICATION NO.	備考 （出願国名） REMARKS
QUALCOMM Incorporated *[20]	Concatenated encoding and decoding for multilayer communication protocol	JP4274942	US7,649,829; US20100107041; US20100272124; BR; CN; DE; EP; FR; GB; HK; IT; KR; NL; TW
	Method and system for a multicast service initiation in a communication system	JP4847603	US6,876,636; US20050169203; JP; BE; BG; BR; CN; CZ; DE; EP; ES; FI; FR; GB; HK; HU; IE; IT; KR; NL; PL; RO; SE; TW
	Handoff in a hybrid communication network	JP4554212	JP; AR; CL; CN; EP; HK; IN; KR; MY; SG; TH; TW; ZA
	Frame formatting, coding and transmit power control method for a multicast/broadcast system	JP4508865	US7,177,658; US7,583,977; US20100172279; US7,593,746; JP; BR; CN; EP; HK; KR; TW
	Handoff in dormant mode in a packet data network	JP4472528	US7,110,377; US8,023,464; JP; AU; BR; CA; CN; DE; EP; FI; FR; GB; HK; ID; IL; IN; IT; KR; MX; RU; SE; TW; UA
	Key generation in a communication system	JP2010-213305	US7,190,793; US20070269048; JP; AU; BR; CA; CN; EP; HK; IN; KR; RU; TW
	Beam-steering and beam-forming for wideband MIMO/MISO systems	JP2005-537751	US6,940,917; US7,194,040; JP; AU; BR; CA; CN; EP; HK; ID; IL; IN; KR; MX; RU; TW; UA

*[20]: These patents are applied to the revised part of ARIB STD-T95 Ver.2.0.

Attachment 2 List of Essential Industrial Property Rights (selection of option 2)

特許出願人 PATENT HOLDER	発明の名称 NAME OF PATENT	出願番号等 REGISTRATION NO./ APPLICATION NO.	備考 （出願国名） REMARKS
QUALCOMM Incorporated *[20]	MIMO WLAN System	JP2006-504335	US20040082356; US20080285488; US20080285669; US20080285670; AU; BE; BG; BR; CA; CN; CZ; DE; EP; ES; FI; FR; GB; HK; HU; ID; IE; IL; IN; IT; KR; MX; NL; RO; RU; SE; TW; UA
	Uplink pilot and signaling transmission in wireless communication systems	JP2006-505230	US6,928,062; US7,042,857; US20060279435; JP; AU; BR; CA; CN; EP; HK; IL; IN; KR; MX; PH; RU; SG; TW; ZA
	Transmission Schemes for Multi-Antenna Communication Systems Utilizing Multi-Carrier Modulation	JP4833830	US7,095,790; US7,606,326; US20100003931; BR; CA; CL; CN; EP; HK; IL; IN; KR; MX; RU; SG; TW; VN
	Pilots for MIMO communication systems	JP4657918	US7,986,742; US20110235744; JP; AT; AU; BE; BR; CA; CH; CN; DE; DK; EP; ES; FI; FR; GB; GR; HK; HU; ID; IE; IL; IN; IT; KR; MX; NL; PT; RO; RU; SE; TW; UA
	Rate adaptive transmission scheme for MIMO systems	JP2006-503522	US6,873,606; US7,675,886; US20100119005; JP; AU; BR; CA; CN; DE; EP; ES; FR; GB; HK; IL; IN; IT; KR; MX; NZ; RU; TW

*[20]: These patents are applied to the revised part of ARIB STD-T95 Ver.2.0.

Attachment 2 List of Essential Industrial Property Rights (selection of option 2)

特許出願人 PATENT HOLDER	発明の名称 NAME OF PATENT	出願番号等 REGISTRATION NO./ APPLICATION NO.	備考 （出願国名） REMARKS
QUALCOMM Incorporated *[20]	Download and display of system tags in wireless communication systems	JP4472531	US7,043,239; US7,292,852; US20080085705; AU; BE; BG; BR; CA; CN; CZ; DE; EP; ES; FI; FR; GB; HK; HU; ID; IE; IL; IN; IT; KR; MX; NL; RO; RU; SE; TW; UA
	Pilot transmission schemes for wireless multi-carrier communication systems	JP2006-517759	US7,280,467; JP; AU; BR; CA; CN; DE; EP; GB; HK; ID; IL; IN; KR; MX; RU; TW; UA
	Hybrid protocol to support communications with multiple networks	JP4806068	US7,916,715; JP; AU; BR; CA; CN; DE; EP; GB; HK; ID; IL; IN; KR; MX; NO; RU; SG; TW
	Method and apparatus to count broadcast content recipients in a wireless telephone network	JP4376898	US7,062,272; US7,409,212; US7,251,487; US7,813,732; AU; BR; CA; CN; EP; HK; ID; IL; IN; KR; MX; RU; TW; UA
	System and method for managing reverse link communication resources in a distributed communication system and corresponding apparatus	JP4713470	US7,979,078; US7,197,319; US8,000,717; JP; CN; EP; HK; KR; TW
	Variable packet lengths for high packet data rate communications	JP4537382	US7,280,562; JP; BR; CA; CN; EP; HK; ID; IL; IN; KR; MX; RU; TW; UA
	Incremental redundancy transmission in a MIMO communication system	JP4741495	US20050052991; JP; AR; AU; BE; BG; BR; CA; CL; CN; CZ; DE; EP; ES; FI; FR; GB; HK; HU; IE; IL; IN; IT; KR; MX; NL; PH; PL; RO; RU; SE; SG; TW; VN

*[20]: These patents are applied to the revised part of ARIB STD-T95 Ver.2.0.

Attachment 2 List of Essential Industrial Property Rights (selection of option 2)

特許出願人 PATENT HOLDER	発明の名称 NAME OF PATENT	出願番号等 REGISTRATION NO./ APPLICATION NO.	備考 （出願国名） REMARKS
QUALCOMM Incorporated *[20]	Apparatus and method for a secure broadcast system	JP2007-529147	US20050010774; AU; BR; CA; CN; EP; HK; IL; IN; KR; MX; MY; PH; RU; SG; TH; TW; VN
	Method and apparatus for providing an efficient control channel structure in a wireless communication system	JP4409576	US20050120097; JP; AU; BR; CA; CN; EG; EP; HK; ID; IL; IN; KR; MX; NO; NZ; PH; RU; SG; TW; UA; VN; ZA
	Mimo system with multiple spatial multiplexing modes	JP4860924	US20040136349; US20100119001; US20080267098; US20080267138; JP; AU; BE; BG; BR; CA; CN; CZ; DE; EP; ES; FI; FR; GB; HK; HU; ID; IE; IL; IN; IT; KR; MX; NL; RO; RU; SE; TW; UA
	Transmit diversity processing for a multi-antenna communication system	JP4739952	US7,002,900; US20060039275; US20100208841; JP; AU; BR; CA; CN; EP; HK; ID; IL; IN; KR; MX; RU; TW; UA
	Method and apparatus for security in a data processing system	JP2007-531337	US20040120527; AR; AU; BR; CA; CN; EP; HK; IL; IN; KR; MX; PH; RU; SG; TH; TW; VN
	Method and apparatus for automatic configuration of wireless communication networks	JP2008-533857	US20060203746; JP; CN; EP; IN; KR; TW

*[20]: These patents are applied to the revised part of ARIB STD-T95 Ver.2.0.

Attachment 2 List of Essential Industrial Property Rights (selection of option 2)

特許出願人 PATENT HOLDER	発明の名称 NAME OF PATENT	出願番号等 REGISTRATION NO./ APPLICATION NO.	備考 （出願国名） REMARKS
QUALCOMM Incorporated *[20]	Pilot transmission and channel estimation for an OFDM system with excess delay spread	JP2007-519368	US7,339,999; US20080152033; US8,027,399; JP; AR; AU; BR; CA; CL; CN; EP; HK; IL; IN; KR; MX; PH; RU; SG; TH; TW; VN
	Outer coding methods for broadcast/multicast content and related apparatus	JP4768615	US7,318,187; US20080098283; US20080151805; US20080141097; JP; BR; CA; CN; EP; HK; IN; KR; MX; TW
	Method and apparatus for acknowledging reverse link transmissions in a communications system	JP4668908	US7,957,263; JP; BR; CA; CN; EP; HK; IN; KR; MX; TW
	Systems and methods for multiplexing control data For multiple data channels onto a single control channel	JP4382817	US7,613,144; AU; BR; CA; CN; EP; HK; ID; IL; IN; KR; MX; RU; TW; UA
	Systems and methods for communicating control data using multiple slot formats	JP4409574	US7,474,643; US8,023,474; AU; BE; BG; BR; CA; CN; CZ; DE; EP; ES; FI; FR; GB; HK; HU; IE; IL; IN; IT; KR; MX; NL; PL; RO; RU; SE; TW; UA
	Spatial spreading in a multi-antenna communication system	JP4607901	US20050175115; AU; BR; CA; CN; DE; EP; ES; FR; GB; HK; IL; IN; IT; KR; MX; PH; RU; SG; TW; VN
	Staggered pilot transmission for channel estimation and time tracking	JP2007-536803	US7,457,231; US7,907,593; JP; BE; BG; CA; CL; CN; CZ; DE; EP; ES; FI; FR; GB; HK; HU; IE; IN; IT; KR; NL; PL; RO; SE; TH; TW

*[20]: These patents are applied to the revised part of ARIB STD-T95 Ver.2.0.

Attachment 2 List of Essential Industrial Property Rights (selection of option 2)

特許出願人 PATENT HOLDER	発明の名称 NAME OF PATENT	出願番号等 REGISTRATION NO./ APPLICATION NO.	備考 （出願国名） REMARKS
QUALCOMM Incorporated *[20]	Hard handoff from a wireless local area network to a cellular telephone network	JP2009-507429	US20070049274; CN; DE; EP; FR; GB; IN; KR
	Transmission of signaling information for broadcast and multicast services	JP4705048	US20050195852; BR; CA; CN; DE; EP; FI; FR; GB; HK; ID; IL; IN; IT; KR; MX; NZ; RU; SE; TW; UA
	System and method for power control in wireless communication systems	JP2007-527677	US20050201180; US20080200204; JP; BE; BG; CA; CN; CZ; DE; EP; ES; FI; FR; GB; HK; HU; IE; IN; IT; KR; NL; PL; RO; SE
	Methods and apparatus for mitigating multi-antenna correlation effect in communication systems	JP2008-526116	US7,974,359; AR; CN; EP; HK; IN; KR; TW
	Signal acquisition in a wireless communication system	JP4763692	US8,027,372; JP; AR; AU; BR; CA; CL; EP; HK; IL; IN; KR; MX; MY; PH; RU; SG; TH; VN
	Multiplexing for a multi-carrier cellular communication system	JP4791459	US7,724,777; US20100195360; JP; AU; BR; CA; CL; CN; EG; EP; HK; ID; IL; IN; KR; MX; MY; NO; NZ; PH; RU; SG; TW; UA; VN; ZA
	OFDM system with code spreading of signalling data	JP2008-511269	US7,852,746; US20110069737; JP; AR; CA; CL; EP; MY; TW
	A method of providing a gap indication during a sticky assignment	JP4834174	US20060034173; JP; AU; BR; CA; CL; CN; DE; EP; ES; FI; FR; GB; HK; HU; ID; IL; IN; IT; KR; MX; MY; NL; NO; NZ; PH; RU; SG; TH; UA; VN

*[20]: These patents are applied to the revised part of ARIB STD-T95 Ver.2.0.

Attachment 2 List of Essential Industrial Property Rights (selection of option 2)

特許出願人 PATENT HOLDER	発明の名称 NAME OF PATENT	出願番号等 REGISTRATION NO./ APPLICATION NO.	備考 （出願国名） REMARKS
QUALCOMM Incorporated *[20]	Continuous beamforming for a MIMO-OFDM system	JP4643632	US20050265275; US20090290657; JP; CA; CN; EP; HK; IN; KR; MY; TW
	Systems and methods for reducing uplink resources to provide channel performance feedback for adjustment of downlink MIMO channel data rates	JP4796122	US20060205357; AU; BR; CA; CN; EP; HK; ID; IL; IN; KR; MX; MY; NZ; PH; RU; SG; TW; UA; VN
	Connected-state radio session transfer in wireless communication systems	JP4542140	US20050266847; BR; CA; CN; EP; HK; IN; KR; MX; MY; TW
	Method and apparatus for performing position determination with pre-session action	JP4653180	US7,747,258; US20100261483; JP; EP; HK; IL; KR; SG
	Dynamic assignment of home agent and home address in wireless communications	JP4787250	US20060002356; JP; BR; CA; CN; EP; HK; IN; KR; MX; TW
	Coded-bit scrambling for multi-stream communication in a MIMO channel	JP2008-512053	JP; BE; BG; BR; CN; CZ; DE; EP; ES; FI; FR; GB; HK; HU; IE; IN; IT; KR; MX; MY; NL; PL; RO; SE; TW
	Shared signaling channel for a communication system	JP2008-507896	US20060018347; CA; CL; CN; EP; HK; IN; KR; TW
	Efficient signaling over access channel	JP4625079	US20060018336; JP; AR; AU; BE; BG; BR; CA; CN; CZ; DE; EP; ES; FI; FR; GB; HK; HU; IE; IL; IN; IT; KR; MX; NL; PH; PL; RO; RU; SE; SG; TH; TW; VN

*[20]: These patents are applied to the revised part of ARIB STD-T95 Ver.2.0.

Attachment 2 List of Essential Industrial Property Rights (selection of option 2)

特許出願人 PATENT HOLDER	発明の名称 NAME OF PATENT	出願番号等 REGISTRATION NO./ APPLICATION NO.	備考 （出願国名） REMARKS
QUALCOMM Incorporated *[20]	Method and apparatus for pseudo-secret key generation to generate a response to a challenge received from service provider	JP2011-123713	US20060046690; CA; CN; EP; HK; IN; KR; MY; TH; TW
	Default configurations with differential encoding in a wireless communication system	JP2008-510395	US20060040645; JP; BR; CN; DE; EP; FI; FR; GB; HK; ID; IL; IT; KR; MX; RU; SE; TW; UA
	Apparatus, system, and method for managing transmission power in a wireless communication system	JP4598074	US7,899,480; US20110165907; JP; BR; CA; CN; EP; HK; IN; KR; MX; TW
	Minimizing feedback by sending a quality indicator for a non-restrictive reuse set and a vectored quality indicator for other reuse sets	JP4664378	US7,548,752; US20100002597; JP; AR; CA; CN; EP; HK; IN; KR; TW
	Method and apparatus for enhancing signal-to-noise ratio of position location measurements	JP2008-537387	US7,920,544; US20110149922; JP; CA; EP; HK; RU
	Method of communicating a frame having a plurality of modulation schemes	JP2011-193484	US20060133455; CA; CL; CN; EP; HK; IN; KR; MY; TW; VE
	Interference control in a wireless communication system	JP2011-156772	US20060209721; AR; AU; BR; CA; CN; DE; EP; GB; HK; ID; IL; IN; KR; MX; MY; NO; NZ; PH; RU; SG; TW; UA; VN
	Method and apparatus for high rate data transmission in wireless communication	JP2008-538061	US20060221883; JP; BR; CA; CN; EP; HK; IN; KR; MY; RU; SG; TW

*[20]: These patents are applied to the revised part of ARIB STD-T95 Ver.2.0.

Attachment 2 List of Essential Industrial Property Rights (selection of option 2)

特許出願人 PATENT HOLDER	発明の名称 NAME OF PATENT	出願番号等 REGISTRATION NO./ APPLICATION NO.	備考 （出願国名） REMARKS
QUALCOMM Incorporated *[20]	Methods and systems for providing enhanced position location in wireless communications	JP2009-521192	US7,893,873; US20110149863; US7,876,265; BR; CA; CN; EP; IN; KR; RU; TW
	Wireless handoffs between multiple wireless networks	JP2008-541512	US20060245395; CN; EP; IN; KR
	Systems and methods for control channel signaling	JP4752003	US20060223449; JP; AR; AU; BR; CA; CN; EP; HK; ID; IL; IN; KR; MX; NO; PH; RU; SG; TW; UA; VN
	Method and apparatus for enhanced file distribution in multicast or broadcast	JP2008-536405	US20060248090; JP; CN; EP; HK; IN; KR; MY; TW
	Multi-carrier operation in data transmission systems	JP4750843	US7,961,700; JP; AU; BE; BG; BR; CA; CN; CZ; DE; EP; ES; FI; FR; GB; HK; HU; ID; IE; IL; IN; IT; KR; MX; MY; NL; NO; NZ; PH; PL; RO; RU; SE; SG; TW; UA; VN
	Ciphering and re-ordering packets in a wireless communication system	JP2008-539678	US20070041382; CN; EP; IN; KR; MY; TW
	Code division multiplexing in a single-carrier frequency division multiple access system	JP2009-505504	US20070041404; CL; CN; EP; HK; IN; KR; TW
	Method and apparatus for adaptive registration and paging area determination	JP2008-547279	US20060286982; JP; AU; BR; CA; CL; CN; EP; ID; IL; IN; KR; MX; NZ; PH; RU; SG; TW; UA; VN
	VOIP emergency call handling	JP2009-505455	US20070060097; JP; BR; CA; CN; EP; HK; KR; RU; SG; TW

*[20]: These patents are applied to the revised part of ARIB STD-T95 Ver.2.0.

Attachment 2 List of Essential Industrial Property Rights (selection of option 2)

特許出願人 PATENT HOLDER	発明の名称 NAME OF PATENT	出願番号等 REGISTRATION NO./ APPLICATION NO.	備考 （出願国名） REMARKS
QUALCOMM Incorporated *[20]	Distributed protocol over a wireless connection	JP2009-506649	US7,899,004; AR; BR; CN; EP; HK; ID; IL; IN; KR; MX; MY; NO; NZ; PH; RU; SG; TW; UA; VN
	Efficient periodic location reporting in a radio access network	JP2009-513036	US20060293066; JP; BR; CA; EP; HK; IL; IN; KR; RU; SG
	Methods and apparatus for efficient providing of scheduling information	JP4787319	US20060285515; JP; BR; CA; CN; EP; IN; KR; RU; SG; TW
	Method and apparatus for selection of virtual antennas	JP4819897	US8,073,068; JP; AR; BR; CA; CN; EP; HK; ID; IL; KR; MX; MY; NO; NZ; RU; TH; TW; UA; VN
	Inter-system handover using legacy interface	JP2009-503941	US20070021120; CN; EP; IN; KR; MY; TW
	Method and apparatus for pilot multiplexing in a wireless communication system	JP2009-524362	US20070195906; US20100142490; BR; CA; CN; EP; IN; KR; RU; SG; TW
	Method and apparatus for packet communications in wireless systems	JP2009-508372	US20070133479; US20110026462; JP; CN; EP; IN; KR; TW
	System and method for multi-network coverage	JP2009-529838	US20070211675; US20080304461; US20100110993; JP; AR; CN; EP; IN; KR
	A method and apparatus for pre-coding frequency division duplexing system	JP4763797	US20070097889; BR; CA; CL; CN; EP; HK; ID; IL; IN; KR; MX; MY; NO; NZ; PH; RU; TH; TW; UA; VN

*[20]: These patents are applied to the revised part of ARIB STD-T95 Ver.2.0.

Attachment 2 List of Essential Industrial Property Rights (selection of option 2)

特許出願人 PATENT HOLDER	発明の名称 NAME OF PATENT	出願番号等 REGISTRATION NO./ APPLICATION NO.	備考 （出願国名） REMARKS
QUALCOMM Incorporated *[20]	Unitary precoding based on randomized FFT matrices	JP2009-516942	US20070097856; CN; EP; HK; IN; KR; TW
	Pilot symbol transmission in wireless communication systems	JP2009-514447	US20070098050; JP; AU; BR; CA; CN; EP; HK; ID; IL; IN; KR; MX; MY; NO; NZ; PH; RU; SG; UA; VN
	Precoding for segment sensitive scheduling in wireless communication systems	JP2009-514400	US20070098099; JP; AU; BR; CA; CN; EP; HK; ID; IL; IN; KR; MX; MY; NO; NZ; PH; RU; SG; UA; VN
	Resource allocation during tune-away	JP4814334	US20070099614; BR; CA; CN; EP; ID; IL; IN; KR; MX; MY; NO; RU; TW; UA; VN
	A method and apparatus for bootstraping information in a communication system	JP2009-514452	US20070097897; AU; BR; CA; CN; EP; HK; ID; IL; IN; KR; MX; MY; NO; NZ; PH; RU; SG; TW; UA; VN
	Methods and apparatus for saving power by designating frame interlaces in communication systems	JP4824766	US20070097894; BR; CA; CN; EP; HK; ID; IL; IN; KR; MX; MY; NO; RU; SG; TH; UA; VN
	Shared signaling channel	JP2009-514450	US20070097853; AR; AU; BR; CA; CL; CN; EP; HK; ID; IL; IN; KR; MX; MY; NO; NZ; PH; RU; SG; TW; UA; VN
	Method and apparatus for achieving flexible bandwidth using variable guard bands	JP2009-514397	US20070147226; JP; AR; BR; CA; CN; EP; HK; IN; KR; SG; TW

*[20]: These patents are applied to the revised part of ARIB STD-T95 Ver.2.0.

Attachment 2 List of Essential Industrial Property Rights (selection of option 2)

特許出願人 PATENT HOLDER	発明の名称 NAME OF PATENT	出願番号等 REGISTRATION NO./ APPLICATION NO.	備考 （出願国名） REMARKS
QUALCOMM Incorporated *20	Frequency hopping of pilot tones	JP2009-538058	BR; CN; EP; HK; IN; RU; SG
	Efficient transmission on a shared data channel for wireless communication	JP2008-514485	US20070177569; BR; CA; CN; EP; IN; KR; RU; SG; TW
	Data state transition during handoff	JP4843052	US20070177547; AR; CN; EP; HK; IN; KR; TW
	FLEXIBLE MEDIUM ACCESS CONTROL (MAC) FOR AD HOC DEPLOYED WIRELESS NETWORKS	JP2009-514441	US20070105575; US20090176503; US20100260133; AR; BR; CA; CN; EP; IN; KR; RU; TH; TW
	Methods and apparatus for determining the location of a mobile device in an OFDM wireless network	JP4819910	US7,706,328; US20090117917; BR; CN; EP; IN; KR; RU; SG; TW
	Privacy protection in communications systems	JP2009-523396	US20070168662; BR; EP; IN; KR; RU; TW
	Global navigation satellite system	JP2008-550408	US7,768,449; US20110187589; CN; EP; IN; KR
	Selection of an access point in a communications system	JP2010-502156	US20080049702; JP; CN; EP; HK; IN; KR; TW
	Open loop power offset update	JP2010-532646	US7,957,757; US20110256902; AU; BR; CA; CN; EP; HK; ID; IL; IN; KR; MX; MY; NZ; PH; RU; SG; TW; UA; VN

*20: These patents are applied to the revised part of ARIB STD-T95 Ver.2.0.

Attachment 2 List of Essential Industrial Property Rights (selection of option 2)

特許出願人 PATENT HOLDER	発明の名称 NAME OF PATENT	出願番号等 REGISTRATION NO./ APPLICATION NO.	備考 （出願国名） REMARKS
QUALCOMM Incorporated *[20]	An apparatus and method for fast access in a wireless communication system	JP2009-529251	US20070183361; BE; BG; BR; CA; CL; CN; CZ; DE; EP; ES; FI; FR; GB; HK; HU; ID; IE; IL; IN; IT; KR; MX; MY; NL; NO; NZ; PH; PL; RO; RU; SE; TW; VN
	Methods and apparatuses for transmitting non-decodable packets	JP2010-521162	AU; BR; CN; EP; ID; IL; IN; KR; MX; MY; NZ; PH; RU; SG; TW; UA; VN
	Orthogonal frequency division multiplexing based spread spectrum multiple access	JP3703002	US6,473,418; AU; BR; CA; CN; DE; EP; ES; FI; FR; GB; ID; IN; IT; KR
	Communications system employing orthogonal frequency division multiplexing based spread spectrum multiple access	JP4593767	US6,553,019; AU; BE; BR; CA; CN; DE; EP; ES; FI; FR; GB; HK; IE; IN; IT; KR; NL; SE
	Methods and apparatus of providing transmit and/or receive diversity with multiple antennas in wireless communication systems	JP4685789	US7,039,370; US7,610,024; US20100041355; JP; CA; CN; EP; HK; IN; KR
	Efficient paging in a wireless communication system	JP4638497	US7,711,377; US20100190514; US20100178942; JP; BR; CA; CN; EP; HK; ID; IL; IN; KR; MX; NO; NZ; PH; RU; SG; UA; VN; ZA
	Methods and apparatus for determining, communicating and using information which can be used for interference control purposes	JP4791592	US20060083161; BR; CN; EG; EP; HK; ID; IL; IN; KR; MX; NO; NZ; PH; RU; SG; VN; ZA

*[20]: These patents are applied to the revised part of ARIB STD-T95 Ver.2.0.

Attachment 2 List of Essential Industrial Property Rights (selection of option 2)

特許出願人 PATENT HOLDER	発明の名称 NAME OF PATENT	出願番号等 REGISTRATION NO./ APPLICATION NO.	備考 （出願国名） REMARKS
QUALCOMM Incorporated *[20]	Methods and apparatus for communicating transmission backlog information	JP2009-521850	US20070159969; AR; AT; BE; CH; CN; DE; DK; EP; ES; FI; FR; GB; GR; HK; HU; IE; IN; IT; KR; NL; NO; PL; PT; RO; SE; TH; TW
	Methods and apparatus of implementing and/or using a dedicated control channel	JP2009-521847	US20070149227; AR; CN; EP; HK; IN; KR; TH; TW
	Methods and apparatus for flexible reporting of control information	JP2009-521852	US20070149228; BE; BG; CL; CN; CZ; DE; EP; ES; FI; FR; GB; HU; IE; IN; IT; KR; NL; PL; RO; SE; TH; TW
	Methods and apparatus for communicating and/or using transmission power information	JP4801172	US20070149238; JP; CN; EP; IN; KR; TW
	Grouping of users for MIMO transmission in a wireless communication system	JP2009-530987	US20070223423; BR; CA; CN; EP; HK; ID; IL; IN; KR; MX; MY; NO; NZ; PH; RU; TW; UA; VN
	Resource allocation to support single-user and multi-user MIMO transmissions	JP2009-530988	US8,059,609; US13/295,381; BR; CA; CL; CN; EP; HK; ID; IL; IN; KR; MX; MY; NO; NZ; PH; RU; SG; TW; VN
	Uplink channel estimation using a signaling channel	JP2009-530992	US20080032630; AR; CN; EP; HK; IN; KR; TW
	Methods and apparatus for supporting mobile virtual network	JP2009-533980	US20070245007; CN; EP; HK; IN; KR; TW

*[20]: These patents are applied to the revised part of ARIB STD-T95 Ver.2.0.

Attachment 2 List of Essential Industrial Property Rights (selection of option 2)

特許出願人 PATENT HOLDER	発明の名称 NAME OF PATENT	出願番号等 REGISTRATION NO./ APPLICATION NO.	備考 （出願国名） REMARKS
QUALCOMM Incorporated *[20]	Methods and apparatus related to using a wireless terminal scrambling identifier	JP2009-533981	US20070242764; AR; CN; EP; IN; KR; TW
	Pseudo wires for mobility management	JP2009-533985	US20070242637; CN; EP; IN; KR
	Feedback of channel state information for MIMO and sub-band scheduling in a wireless communication system	JP2009-531993	US8,014,455; US13/214,621; AR; BE; BG; BR; CA; CN; CZ; DE; EP; ES; FI; FR; GB; HK; HU; IE; IN; IT; KR; NL; PL; RO; RU; SE; SG; TW
	An apparatus and method for fast access in a wireless communication system	JP2009-530990	US20080019306; AU; BR; CA; CL; CN; EP; HK; ID; IL; IN; KR; MX; MY; NO; NZ; PH; RU; SG; TW; UA; VN
	Expedited handoff	JP2009-544252	US8,064,401; US13/275,138; CN; EP; HK; IN; KR; TW
	Method and apparatus for quick-paging of terminals in a wireless communication system	JP2009-544244	US20080014969; CN; EP; HK; IN; KR; TW
	Uplink access request in an OFDM communication environment	JP2009-544241	US7,869,421; US20110075639; CN; EP; IN; KR
	Method and apparatus for enhanced paging	JP2009-535941	US20070254679; US20110201361; JP; AU; BE; BG; BR; CA; CL; CN; CZ; DE; EP; ES; FI; FR; GB; HK; HU; ID; IE; IL; IN; IT; KR; MX; MY; NL; NO; NZ; PH; PL; RO; RU; SE; SG; TW; UA; VN

*[20]: These patents are applied to the revised part of ARIB STD-T95 Ver.2.0.

Attachment 2 List of Essential Industrial Property Rights (selection of option 2)

特許出願人 PATENT HOLDER	発明の名称 NAME OF PATENT	出願番号等 REGISTRATION NO./ APPLICATION NO.	備考 （出願国名） REMARKS
QUALCOMM Incorporated *[20]	Dynamic frequency allocation and modulation scheme for control information	JP2009-543528	US20080090528; AU; BR; CA; CN; EP; HK; ID; IL; IN; KR; MX; MY; NO; NZ; PH; RU; SG; TW; UA; VN
	Propagating session state changes to network functions in an active set	JP2009-540695	US20070286206; BR; CA; CN; EP; HK; KR; RU; SG; TW
	Signal acquisition in a wireless communication system	JP2009-538576	US20080285526; BR; CA; CN; EP; IN; KR; RU; SG; TH; TW
	Signal acquisition for wireless communication systems	JP2009-544178	US20070281642; BR; CA; CN; EP; HK; IN; KR; RU; SG; TW
	Preamble structure and acquisition for a wireless communication system	JP2009-540769	US20080279220; BR; CA; CN; DE; EP; ES; FR; GB; HK; ID; IL; IN; IT; KR; MX; MY; NO; NZ; PH; RU; SG; TW; UA; VN
	Using codewords in a wireless communication system	JP2010-518761	US7,839,308; AU; BR; CA; CN; EP; HK; ID; IL; IN; KR; MX; MY; NZ; PH; RU; SG; TW; UA; VN
	Data routing via lower layers in a communication system	JP2009-542119	US20080101356; CN; EP; HK; IN; KR
	Method and apparatus for selection mechanism between OFDM-MIMO and LFDM-SIMO	JP2009-542164	US20080095263; AU; BR; CA; CN; EP; HK; ID; IL; IN; KR; MX; MY; NO; NZ; PH; RU; SG; TW; UA; VN

*[20]: These patents are applied to the revised part of ARIB STD-T95 Ver.2.0.

Attachment 2 List of Essential Industrial Property Rights (selection of option 2)

特許出願人 PATENT HOLDER	発明の名称 NAME OF PATENT	出願番号等 REGISTRATION NO./ APPLICATION NO.	備考 （出願国名） REMARKS
QUALCOMM Incorporated *[20]	Frequency hopping in an SC-FDMA environment	JP2009-544189	US20080089286; AU; BR; CA; CN; EP; HK; ID; IL; IN; KR; MX; MY; NO; NZ; PH; RU; SG; TW; UA; VN
	Frequency selective and frequency diversity transmissions in a wireless communication system	JP2009-544258	US20080013599; BR; CA; CN; EP; HK; ID; IL; IN; KR; MX; MY; NO; NZ; PH; RU; SG; TW; UA; VN
	Variable control channel for a wireless communication system	JP2010-512033	US20080095106; AT; AU; BE; BR; CA; CH; CN; DE; DK; EP; ES; FI; FR; GB; GR; HK; HU; ID; IE; IL; IN; IT; KR; MX; MY; NL; NO; NZ; PH; PL; PT; RO; RU; SE; SG; TW; UA; VN
	Method and apparatus for sending signaling for data transmission in a wireless communication system	JP2009-545276	US20080025267; US20100284377; BR; CA; CN; EP; HK; IN; KR; RU; SG; TW
	Method and apparatus for random access in an orthogonal multiple-access communication system	JP2010-502120	US20080273610; AU; BR; CA; CN; EP; HK; ID; IL; IN; KR; MX; MY; NO; NZ; PH; RU; SG; TW; UA; VN
	Methods and apparatus for power allocation and/or rate selection for UL MIMO/SIMO operations with PAR considerations	JP2010-509863	US20100029320; JP; AU; BR; CA; CN; EP; HK; ID; IL; IN; KR; MX; MY; NO; NZ; PH; RU; SG; TW; UA; VN
	Feedback of precoding control indication (PCI) and channel quality indication (CQI) in a wireless communication system	JP2010-502114	US20080043867; BR; CA; CN; EP; HK; IN; KR; RU; SG; TW

*[20]: These patents are applied to the revised part of ARIB STD-T95 Ver.2.0.

Attachment 2 List of Essential Industrial Property Rights (selection of option 2)

特許出願人 PATENT HOLDER	発明の名称 NAME OF PATENT	出願番号等 REGISTRATION NO./ APPLICATION NO.	備考 （出願国名） REMARKS
QUALCOMM Incorporated *20	Method and apparatus for flexible pilot pattern	JP2010-502118	US20080089312; AU; BR; CA; CN; EP; HK; ID; IL; IN; KR; MX; MY; NO; NZ; PH; RU; SG; TW; VN
	Semi-persistent scheduling for traffic spurts in wireless communication	JP2010-502127	US20080117891; AU; BR; CA; CN; EP; HK; ID; IL; IN; KR; MX; MY; NO; NZ; PH; RU; SG; TW; UA; VN
	Acquisition in frequency division multiple access systems	JP2010-502128	US20080089282; AU; BR; CA; CN; EP; HK; ID; IL; IN; KR; MX; MY; NO; NZ; PH; RU; SG; TW; UA; VN
	Systems and methods for key management for wireless communications systems	JP2010-502132	US20080070577; BR; CA; CN; EP; IN; KR; RU; SG; TW
	Method and apparatus for acknowledgment repetition in orthogonal systems	JP2010-503291	US20080095109; AU; BR; CA; CN; EP; HK; ID; IL; IN; KR; MX; MY; NO; NZ; PH; RU; SG; TW; UA; VN
	Signaling transmission with localized spreading for wireless communication	JP2010-503348	US20080101441; AU; BR; CA; CN; EP; HK; ID; IL; IN; KR; MX; MY; NO; NZ; PH; RU; SG; TW; UA; VN
	Codeword permutation and reduced feedback for grouped antennas	JP2010-503335	US20080080641; JP; BR; CA; CN; EP; HK; IN; KR; RU; SG; TW
	Method and apparatus for preparing connection transfer between an IP based communication system (LTE/SAE) and a PDP context based communication system (UMTS/GPRS)	JP2010-506462	US7,920,522; BR; CA; CN; EP; IN; KR; RU; SG; TW

*20: These patents are applied to the revised part of ARIB STD-T95 Ver.2.0.

Attachment 2 List of Essential Industrial Property Rights (selection of option 2)

特許出願人 PATENT HOLDER	発明の名称 NAME OF PATENT	出願番号等 REGISTRATION NO./ APPLICATION NO.	備考 （出願国名） REMARKS
QUALCOMM Incorporated *[20]	Synchronization transmissions in a wireless communication system	JP2010-506502	US20110002430; AU; BR; CA; CN; EP; HK; ID; IL; IN; KR; MX; MY; NO; NZ; PH; RU; SG; TW; UA; VN
	Sub-band dependent resource management	JP2010-508792	US20100027502; BR; CA; CN; EP; HK; ID; IL; IN; KR; MX; MY; NO; NZ; PH; RU; SG; TW; VN
	Random access signaling transmission for system access in wireless communication	JP2010-506508	US20100309877; AU; BR; CA; CN; EP; HK; ID; IL; IN; KR; MX; MY; NO; NZ; PH; RU; SG; TW; UA; VN
	Re-synchronization of temporary UE IDS in a wireless communication system	JP2010-506504	US20100189071; BR; CA; CN; EP; HK; IN; KR; RU; SG; TW
	Method and apparatus for handling user equipment capability information	JP2010-510694	US20090093280; BR; CA; CN; EP; HK; IN; KR; RU; SG; TW
	Frequency domain PN sequence	JP2011-525199	US20100054211; BR; CN; EP; IL; KR; MX; MY; NZ; PH; RU; SG; TW; UA; VN
	Method and apparatus for increasing ack resources for a wireless communication system	JP2010-508783	US20100034156; BR; CA; CN; EP; HK; IN; KR; RU; SG; TW
	Space division multiple access channelization in wireless communication systems	JP2010-506546	US7,903,615; AU; BR; CA; CN; EP; HK; ID; IL; IN; KR; MX; MY; NO; NZ; PH; RU; SG; TW; VN
	A method and apparatus for setting reverse link CQI reporting modes in wireless communication system	JP2009-514417	US7,924,800; US20110280183; CN; EP; HK; IN; KR

*[20]: These patents are applied to the revised part of ARIB STD-T95 Ver.2.0.

Attachment 2 List of Essential Industrial Property Rights (selection of option 2)

特許出願人 PATENT HOLDER	発明の名称 NAME OF PATENT	出願番号等 REGISTRATION NO./ APPLICATION NO.	備考 （出願国名） REMARKS
QUALCOMM Incorporated *[20]	A method and apparatus for bit demultiplexing in a wireless communication systems	JP4785930	US7,864,819; CN; EP; HK; IN; KR
	Reverse link resource assignment and reverse link power control for wireless communication systems	JP2010-507288	US8,050,701; US13/230,761; AU; BR; CA; CN; EP; HK; ID; IL; IN; KR; MX; MY; NO; NZ; PH; RU; SG; UA; VN
	Apparatus and method of random access for wireless communication	JP2010-508785	US20100093386; AU; BR; CA; CN; EP; HK; ID; IL; IN; KR; MX; MY; NO; NZ; PH; RU; SG; TW; UA; VN
	Reliable uplink resource request	JP2010-508786	US20100074193; AU; BR; CA; CN; EP; HK; ID; IL; IN; KR; MX; MY; NO; NZ; PH; RU; SG; TW; UA; VN
	Method and apparatus for hybrid FDM-CDM structure for single carrier based control channels	JP2010-508777	US20100118855; AU; BR; CA; CN; EP; HK; ID; IL; IN; KR; MX; MY; NO; NZ; PH; RU; SG; TW; UA; VN
	Systems and methods for using internet mobility protocols with non internet mobility protocols	JP2010-507936	US20080175201; BR; CA; CN; EP; IN; KR; RU; SG; TW
	Multiplexing of control and data with varying power offsets in a SC-FDMA system	JP2010-508778	US20100027450; AU; BR; CA; CN; EP; HK; ID; IL; IN; KR; MX; MY; NO; NZ; PH; RU; SG; TW; UA; VN
	Frame structures for wireless communication systems.	JP2010-507993	US20090232079; AU; BR; CA; CN; EP; HK; ID; IL; IN; KR; MX; MY; NO; NZ; PH; RU; SG; TW; UA; VN

*[20]: These patents are applied to the revised part of ARIB STD-T95 Ver.2.0.

Attachment 2 List of Essential Industrial Property Rights (selection of option 2)

特許出願人 PATENT HOLDER	発明の名称 NAME OF PATENT	出願番号等 REGISTRATION NO./ APPLICATION NO.	備考 （出願国名） REMARKS
QUALCOMM Incorporated *[20]	Method and apparatus for codebook exchange in a multiple access wireless communication system	JP2010-508720	US7,961,640; US20110222627; AU; BR; CA; CN; EP; HK; ID; IL; IN; KR; MX; MY; NO; NZ; PH; RU; SG; TW; VN
	Inter-enode B handover procedure	JP2009-535426	US20100238903; AU; BR; CA; CN; EP; HK; ID; IL; IN; KR; MX; MY; NO; NZ; PH; RU; SG; TW; UA; VN
	Selective phase connection establishment	JP2010-528497	US20080310378; BR; CA; CN; EP; HK; IN; KR; RU; SG; TW
	MIMO transmission with layer permutation in a wireless communication system	JP2010-509861	US20100027697; AU; BR; CA; CN; EP; HK; ID; IL; IN; KR; MX; MY; NO; NZ; PH; RU; SG; TW; UA; VN
	Method for transmit power control dependent on subband load	JP2010-509866	US20100093363; AU; BR; CA; CN; EP; HK; ID; IL; IN; KR; MX; MY; NO; NZ; PH; RU; SG; UA; VN
	Uplink timing control	JP2010-522505	US20080279131; BR; CA; CN; EP; HK; IN; KR; RU; SG; TW
	Providing antenna diversity in a wireless communication system	JP2010-509875	US20080117999; BR; CA; CN; EP; HK; IN; KR; RU; SG; TW
	Codeword level scrambling for MIMO transmission	JP2010-509860	US20100074350; AU; BR; CA; CN; EP; HK; ID; IL; IN; KR; MX; MY; NO; NZ; PH; RU; SG; TW; UA; VN

*[20]: These patents are applied to the revised part of ARIB STD-T95 Ver.2.0.

Attachment 2 List of Essential Industrial Property Rights (selection of option 2)

特許出願人 PATENT HOLDER	発明の名称 NAME OF PATENT	出願番号等 REGISTRATION NO./ APPLICATION NO.	備考 （出願国名） REMARKS
QUALCOMM Incorporated *[20]	Method and apparatus for SRNS relocation in wireless communication systems	JP2010-509870	US7,995,534; BR; CA; CN; EP; HK; IN; KR; RU; SG
	System selection based on application requirements and preferences	JP2010-531565	AU; BR; CA; CN; EP; HK; ID; IL; IN; KR; MX; MY; NZ; PH; RU; SG; TW; UA; VN
	Methods and apparatus for implementing proxy mobile IP in foreign agent care-of address mode	JP2010-510728	US20080159227; AU; BR; CA; CN; EP; HK; ID; IL; IN; KR; MX; MY; NO; NZ; PH; RU; SG; TW; UA; VN
	Methods and apparatus for transferring a mobile device from a source eNB to a target eNB	JP2010-512125	US20080130580; CN; EP; HK; IN; KR; TW
	Methods and apparatus for RLC re-transmission schemes	JP2010-512691	US20080139113; BR; CA; CN; EP; HK; IN; KR; RU; SG; TW
	MIMO transmission with rank-dependent precoding	JP2010-518763	US7,995,671; US20110280342; AU; BR; CA; CN; EP; HK; ID; IL; IN; KR; MX; MY; NZ; PH; RU; SG; TW; UA; VN
	Using DTX and DRX in a wireless communication system	JP2010-516208	US20090122736; AU; BR; CA; CN; EP; HK; ID; IL; IN; KR; MX; MY; NZ; PH; RU; SG; UA; VN
	Fast cell search	JP2010-516204	US20090131037; AU; BR; CA; CN; EP; HK; ID; IL; IN; KR; MX; MY; NZ; PH; RU; SG; UA; VN

*[20]: These patents are applied to the revised part of ARIB STD-T95 Ver.2.0.

Attachment 2 List of Essential Industrial Property Rights (selection of option 2)

特許出願人 PATENT HOLDER	発明の名称 NAME OF PATENT	出願番号等 REGISTRATION NO./ APPLICATION NO.	備考 （出願国名） REMARKS
QUALCOMM Incorporated *[20]	Radio resource connection (RRC) establishment for wireless systems	JP2010-535433	US20080167042; BR; CA; CN; EP; HK; IN; KR; RU; SG; TW
	Pilot transmission in a wireless communication system	JP2010-516121	US20080165969; AU; BR; CA; CN; EP; HK; ID; IL; IN; KR; MX; MY; NZ; PH; RU; SG; TW; UA; VN
	CQI reporting for MIMO transmission in a wireless communication system	JP2010-516198	US20080188259; US201102866353; BR; CA; CN; EP; HK; IN; KR; RU; SG; TW
	Transmission of information using cyclically shifted sequences	JP2010-516203	US20080165893; AU; BR; CA; CN; EP; HK; ID; IL; IN; KR; MX; MY; NZ; PH; RU; SG; TW; UA; VN
	Pilot structure with multiplexed unicast and SFN transmissions	JP2010-516201	US8,077,801; AU; BR; CA; CN; EP; HK; ID; IL; IN; KR; MX; MY; NZ; PH; RU; SG; TW; UA; VN
	A method and apparatus for new key derivation upon handoff in wireless networks	JP2010-525764	US20080267407; AU; BR; CA; CN; EP; HK; ID; IL; IN; KR; MX; MY; NZ; PH; RU; SG; TW; UA; VN
	Mapping uplink acknowledgement transmission based on downlink virtual resource blocks	JP2010-517445	US20080205348; AU; BR; CA; CN; EP; HK; ID; IL; IN; KR; MX; MY; NZ; PH; RU; SG; UA; VN
	Flexible DTX and DRX in a wireless communication system	JP2010-519793	US20080186892; AU; BR; CA; CN; EP; HK; ID; IL; IN; KR; MX; MY; NZ; PH; RU; SG; TW; UA; VN

*[20]: These patents are applied to the revised part of ARIB STD-T95 Ver.2.0.

Attachment 2 List of Essential Industrial Property Rights (selection of option 2)

特許出願人 PATENT HOLDER	発明の名称 NAME OF PATENT	出願番号等 REGISTRATION NO./ APPLICATION NO.	備考 （出願国名） REMARKS
QUALCOMM Incorporated *20	Method and apparatus for emergency broadcast using an emergency broadcast-multicast service	JP2010-518709	US20080227428; AU; BR; CA; CN; EP; HK; IL; IN; KR; MX; MY; NZ; PH; RU; SG; TW; UA; VN
	Demodulation of a subset of available link assignment blocks	JP2010-517489	US20080182585; AU; BR; CA; CN; EP; HK; ID; IL; IN; KR; MX; MY; NZ; PH; RU; SG; TW; UA; VN
	Method an apparatus for power control during DTX operation	JP2010-518705	US7,881,742; US8,060,130; AU; BR; CA; CN; EP; HK; ID; IL; IN; KR; MX; MY; NZ; PH; RU; SG; TW; UA; VN
	Hopping structures for broadband pilot signals	JP2010-518755	US20080187027; AU; BR; CA; CN; EP; HK; ID; IL; IN; KR; MX; MY; NZ; PH; RU; SG; TW; UA; VN
	Method and apparatus for inter-system handover	JP2010-519855	US20110206009; AU; BR; CA; CN; EP; HK; ID; IL; IN; KR; MX; MY; NZ; PH; RU; SG; TW; UA; VN
	Methods and apparatus for performing channel tree operations	JP2010-523057	US20080239992; AU; BR; CA; CN; EP; HK; ID; IL; IN; KR; MX; MY; NZ; PH; RU; SG; TW; UA; VN
	Method and apparatus for handoff between access systems	JP2010-521924	US20080259869; AU; BR; CA; CN; EP; HK; ID; IL; IN; KR; MX; MY; NZ; PH; RU; SG; TW; UA; VN
	Hybrid pilot configuration	JP2010-521890	US20080225993; AU; BR; CA; CN; EP; HK; ID; IL; IN; KR; MX; MY; NZ; PH; RU; SG; TW; UA; VN

*20: These patents are applied to the revised part of ARIB STD-T95 Ver.2.0.

Attachment 2 List of Essential Industrial Property Rights (selection of option 2)

特許出願人 PATENT HOLDER	発明の名称 NAME OF PATENT	出願番号等 REGISTRATION NO./ APPLICATION NO.	備考 （出願国名） REMARKS
QUALCOMM Incorporated *[20]	PICH-HS timing and operation	JP2010-521897	US20080227449; BR; CA; CN; EP; HK; IN; KR; RU; SG; TW
	Method and apparatus for polling in a wireless communication system	JP2010-521933	US20080225824; AU; BR; CA; CN; EP; HK; ID; IL; IN; KR; MX; MY; NZ; PH; RU; SG; TW; UA; VN
	Connection independent session handoff from source session reference network controller to target SRNC	JP2010-522509	US20080261598; AU; BR; CA; CN; EP; HK; ID; IL; IN; KR; MX; MY; NZ; PH; RU; SG; TW; UA; VN
	Apparatus and method of performing a handoff in a communication network	JP2010-524301	US20080240039; AU; BR; CA; CN; EP; HK; ID; IL; IN; KR; MX; MY; NZ; PH; RU; SG; TW; UA; VN
	Method and apparatus for determining broadcast messages in wireless signals	JP2010-522523	US20080232294; AU; BR; CA; CN; EP; HK; ID; IL; IN; KR; MX; MY; NZ; PH; RU; SG; TW; UA; VN
	Circular buffer based rate matching	JP2010-523064	US20090049359; AU; BR; CA; CN; EP; HK; ID; IL; IN; KR; MX; MY; NZ; PH; RU; SG; TW; UA; VN
	Handoff of data attachment point	JP2010-524359	US8,059,595; AU; BR; CA; CN; EP; HK; ID; IL; IN; KR; MX; MY; NZ; PH; RU; SG; TW; UA; VN
	Enhanced pilot signal	JP2010-529721	US20090124265; AU; BR; CA; CN; EP; HK; ID; IL; IN; KR; MX; MY; NZ; PH; RU; SG; UA; VN

*[20]: These patents are applied to the revised part of ARIB STD-T95 Ver.2.0.

Attachment 2 List of Essential Industrial Property Rights (selection of option 2)

特許出願人 PATENT HOLDER	発明の名称 NAME OF PATENT	出願番号等 REGISTRATION NO./ APPLICATION NO.	備考 （出願国名） REMARKS
QUALCOMM Incorporated *[20]	Method and apparatus for providing gateway relocation when performing a handover	JP2010-525681	US20080259873; CN; EP; HK; IN; KR; TW
	Postition location for wireless communication systems	JP2010-529419	US20080274753; CN; EP; IN; KR
	Flexible signaling of resources on a control channel	JP2010-526499	US20090325585; AU; BR; CA; CN; EP; HK; ID; IL; IN; KR; MX; MY; NZ; PH; RU; SG; TW; UA; VN
	Method and apparatus for UL ACK allocation	JP2010-527543	US20080273513; AU; BR; CA; CN; EP; HK; ID; IL; IN; KR; MX; MY; NZ; PH; RU; SG; TW; UA; VN
	Mobile IP home agent discovery	JP2010-529790	US20090010206; AU; BR; CA; CN; EP; HK; ID; IL; IN; KR; MX; MY; NZ; PH; RU; SG; TW; UA; VN
	Scrambling methods for synchronization channels	JP2010-528565	US7,920,598; CN; EP; HK; IN; KR; TW
	Method and apparatus for sending scheduling information for broadcast and multicast services in a cellular communication system	JP2010-530662	US20090046617; AU; BR; CA; CN; EP; HK; ID; IL; IN; KR; MX; MY; NZ; PH; RU; SG; TW; UA; VN
	Pseudo-random sequence mapping in wireless communications	JP2010-530667	US20080305788; AU; BR; CA; CN; EP; HK; ID; IL; IN; KR; MX; MY; NZ; PH; RU; SG; TW; UA; VN
	Quality of service information configuration	JP2010-531097	US20080310303; AU; BR; CA; CN; EP; HK; ID; IL; IN; KR; MX; MY; NZ; PH; RU; SG; TW; VN

*[20]: These patents are applied to the revised part of ARIB STD-T95 Ver.2.0.

Attachment 2 List of Essential Industrial Property Rights (selection of option 2)

特許出願人 PATENT HOLDER	発明の名称 NAME OF PATENT	出願番号等 REGISTRATION NO./ APPLICATION NO.	備考 （出願国名） REMARKS
QUALCOMM Incorporated *[20]	Methods and apparatus for neighbor discovery of base stations in a communication system	JP2010-530723	US20080311914; AU; BR; CA; CN; EP; HK; ID; IL; IN; KR; MX; MY; NZ; PH; RU; SG; TW; VN
	Rate matching with multiple code block sizes	JP2010-512361	US20090041110; AU; BR; CA; CN; EP; HK; ID; IL; IN; KR; MX; MY; NZ; PH; RU; SG; TW; UA; VN
	Method and apparatus for PDCP reordering at handoff	JP2010-531115	US20080310367; AU; BR; CA; CN; EP; HK; ID; IL; IN; KR; MX; MY; NZ; PH; RU; SG; TW; UA; VN
	Delivery of handover command	JP2010-531117	US20090046656; AU; BR; CA; CN; EP; HK; ID; IL; IN; KR; MX; MY; NZ; PH; RU; SG; TW; UA; VN
	Multiplexing of sounding singals in ACK and CQI channels	JP2010-530724	US20090073955; AU; BR; CA; CN; EP; HK; ID; IL; IN; KR; MX; MY; NZ; PH; RU; SG; TW; UA; VN
	Method and apparatus for fast inter-system handover	JP2010-531116	US20090016300; AU; BR; CA; CN; EP; HK; ID; IL; IN; KR; MX; MY; NZ; PH; RU; SG; TW; UA; VN
	Control channel format indicator frequency mapping	JP2010-531119	US20090022235; AU; BR; CA; CN; EP; HK; ID; IL; IN; KR; MX; MY; NZ; PH; RU; SG; TW; UA; VN
	Encryption of the scheduled uplink message in random access procedure	JP2010-531582	US20090041246; AU; BR; CA; CN; EP; HK; ID; IL; IN; KR; MX; MY; NZ; PH; RU; SG; TW; UA; VN

*[20]: These patents are applied to the revised part of ARIB STD-T95 Ver.2.0.

Attachment 2 List of Essential Industrial Property Rights (selection of option 2)

特許出願人 PATENT HOLDER	発明の名称 NAME OF PATENT	出願番号等 REGISTRATION NO./ APPLICATION NO.	備考 （出願国名） REMARKS
QUALCOMM Incorporated *[20]	Recovery from handoff error due to false detection of handoff completion signal at access terminal	JP2010-531627	US20090029706; AU; BR; CA; CN; DE; EP; ES; FR; GB; HK; ID; IL; IN; IT; KR; MX; MY; NZ; PH; RU; SG; TW; UA; VN
	Scrambling codes for secondary sychronization codes in wireless communication systems	JP2011-501517	US20090122839; AU; BR; CA; CN; EP; HK; ID; IL; IN; KR; MX; MY; NZ; PH; RU; SG; TW; UA; VN
	MIP/PMIP concatenation when overlapping address space are used	JP2010-534034	US20090016270; AU; BR; CA; CN; EP; HK; ID; IL; IN; KR; MX; MY; NZ; PH; RU; SG; TW; UA; VN
	Mobile IP multiple registrations and PCC interactions	JP2011-511602	US20090196231; BR; CA; CN; EP; HK; IN; KR; RU; SG; TW
	Methods and systems for CDMA network switching notification in a WIMAX network	JP2011-523812	US20090285186; BR; CA; CN; EP; IN; KR; RU; SG; TW
	Methods and apparatus for resolving pilot pseudorandom noise code conflicts in a communication system	JP2010-534036	US20090023464; AU; BR; CA; CN; EP; HK; ID; IL; IN; KR; MX; MY; NZ; PH; RU; SG; TW; UA; VN
	Optimizing in-order delivery of data packets during wireless communication handover	JP2010-537505	US20090052397; AU; BR; CA; CN; EP; HK; ID; IL; IN; KR; MX; MY; NZ; PH; RU; SG; TW; UA; VN
	Methods, apparatuses and computer program products for inter-system handoff implementing tunneling between source and target access systems	JP2010-534046	AU; BR; CA; CN; EP; HK; ID; IL; IN; KR; MX; MY; NZ; PH; RU; SG; TW; UA; VN

*[20]: These patents are applied to the revised part of ARIB STD-T95 Ver.2.0.

Attachment 2 List of Essential Industrial Property Rights (selection of option 2)

特許出願人 PATENT HOLDER	発明の名称 NAME OF PATENT	出願番号等 REGISTRATION NO./ APPLICATION NO.	備考 （出願国名） REMARKS
QUALCOMM Incorporated *[20]	Methods and apparatus for in-order delivery of data packets during handoff	JP2010-534453	US20090040981; AU; BR; CA; CN; EP; HK; ID; IL; IN; KR; MX; MY; NZ; PH; RU; SG; TW; UA; VN
	Multiplexing and transmission of traffic data and control information in a wireless communication system	JP2010-536260	US20090073922; AU; BR; CA; CN; EP; HK; ID; IL; IN; KR; MX; MY; NZ; PH; RU; SG; TW; VN
	Quality of service continuity	JP2011-514746	US20090201884; AU; BR; CA; CN; EP; HK; ID; IL; IN; KR; MX; MY; NZ; PH; RU; SG; TW; UA; VN
	Frequency diverse transmissions in a wireless communication system	JP2010-537501	US20090073929; AU; BR; CA; CN; EP; HK; ID; IL; IN; KR; MX; MY; NZ; PH; RU; SG; TW; UA; VN
	Method and apparatus for supporting broadcast and multicast services in a wireless communication system	JP2010-538503	US20090047942; AU; BR; CA; CN; EP; HK; ID; IL; IN; KR; MX; MY; NZ; PH; RU; SG; TW; UA; VN
	Mimo transmission with spatial pre-coding	JP2011-517373	US20090046800; AU; BR; CA; CN; EP; HK; ID; IL; IN; KR; MX; MY; NZ; RU; SG; TW; VN
	Secondary synchronization codebook for E-UTRAN	JP2010-537497	BR; CA; CN; EP; IN; KR; RU; SG; TW
	Resource scaling in wireless communication systems	JP2011-504326	US20090116389; AU; BR; CA; CN; EP; HK; ID; IL; IN; KR; MX; MY; NZ; PH; RU; SG; TW; UA; VN

*[20]: These patents are applied to the revised part of ARIB STD-T95 Ver.2.0.

Attachment 2 List of Essential Industrial Property Rights (selection of option 2)

特許出願人 PATENT HOLDER	発明の名称 NAME OF PATENT	出願番号等 REGISTRATION NO./ APPLICATION NO.	備考 （出願国名） REMARKS
QUALCOMM Incorporated *[20]	Paging user devices in a wireless access network	JP2010-538584	US20090061851; AU; BR; CA; CN; EP; HK; ID; IL; IN; KR; MX; MY; NZ; PH; RU; SG; TW; UA; VN
	Resolving node identifier confusion	JP2011-504060	US20090132674; AU; BR; CA; CN; EP; HK; ID; IL; IN; KR; MX; MY; NZ; PH; RU; SG; TW; UA; VN
	Configuring an access point of a FEMTO cell	JP2011-504352	US20090129354; AU; BR; CA; CN; EP; HK; ID; IL; IN; KR; MX; MY; NZ; PH; RU; SG; TW; UA; VN
	Methods and apparatus for including communication mode information (TDD or FDD) in a transmission frame for system acquisition	JP2010-539799	US7,860,036; US20110064007; AU; BE; BG; BR; CA; CN; CZ; DE; EP; ES; FI; FR; GB; HK; HU; ID; IE; IL; IN; IT; KR; MX; MY; NL; NO; NZ; PL; RO; RU; SE; SG; TW; UA; VN
	FEMTO cell synchronization and pilot search methodology	JP2011-501526	US20090097452; AU; BR; CA; CN; EP; HK; ID; IL; IN; KR; MX; MY; NZ; PH; RU; SG; TW; UA; VN
	Method and apparatus of power control for a public warning system	JP2011-501885	US20090130972; AU; BR; CA; CN; EP; HK; ID; IL; IN; KR; MX; MY; NZ; PH; RU; SG; TW; VN
	Integrity protection and/or ciphering for UE registration with a wireless network	JP2011-525207	US20100054472; CN; EP; IN; KR; TW

*[20]: These patents are applied to the revised part of ARIB STD-T95 Ver.2.0.

Attachment 2 List of Essential Industrial Property Rights (selection of option 2)

特許出願人 PATENT HOLDER	発明の名称 NAME OF PATENT	出願番号等 REGISTRATION NO./ APPLICATION NO.	備考 （出願国名） REMARKS
QUALCOMM Incorporated *[20]	Assisted initial network acquisition and system determination	JP2011-514778	US20090221283; AU; BR; CA; CN; EP; HK; ID; IL; IN; KR; MX; MY; NZ; PH; RU; SG; TW; UA; VN
	Medium access control header format	JP2010-541495	US20090141670; AU; BR; CA; CN; EP; HK; ID; IL; IN; KR; MX; MY; NZ; PH; RU; SG; TW; VN
	Method and apparatus for implementing LTE RLC header formats	JP2010-528104	US20090086710; AU; BR; CA; CN; EP; HK; ID; IL; IN; KR; MX; MY; NZ; RU; SG; TW; UA; VN
	Efficient system identification schemes for communication systems	JP2011-504310	US20090129298; AU; BR; CA; CN; EP; HK; ID; IL; IN; KR; MX; MY; NZ; PH; RU; SG; TW; UA; VN
	Methods and apparatus for self configuring network relations	JP2011-504674	US20090191866; AU; BR; CA; CN; EP; HK; ID; IL; IN; KR; MX; MY; NZ; PH; RU; SG; TW; UA; VN
	Arrangement and method for transmitting control information in wireless communication systems	JP2011-502436	US20090110038; AU; BR; CA; CN; EP; HK; ID; IL; IN; KR; MX; MY; NZ; PH; RU; SG; TW; UA; VN
	Buffer status report triggers in wireless communications	US20100070814*	TW
	Methods and systems for HFN handling at inter-base station handover in mobile communication networks	JP2011-502438	US20090122762; AU; BR; CA; CN; EP; HK; ID; IL; IN; KR; MX; MY; NZ; PH; RU; SG; TW; UA; VN

*[20]: These patents are applied to the revised part of ARIB STD-T95 Ver.2.0.

Attachment 2 List of Essential Industrial Property Rights (selection of option 2)

特許出願人 PATENT HOLDER	発明の名称 NAME OF PATENT	出願番号等 REGISTRATION NO./ APPLICATION NO.	備考 （出願国名） REMARKS
QUALCOMM Incorporated *[20]	Service data unit discard timers	JP2011-504675	US20090116399; AU; BR; CA; CN; EP; HK; ID; IL; IN; KR; MX; MY; NZ; RU; SG; TW; UA; VN
	Time slot reservation for a dominant interference scenario in a wireless communication network through direct communication between interferred and Interfering base station	JP2011-504062	US20090131065; AU; BR; CA; CN; EP; HK; ID; IL; IN; KR; MX; MY; NZ; PH; RU; SG; TW; UA; VN
	Interference management in a wireless communication system using adaptive path loss adjustment	JP2011-517863	US20090137241; AU; BR; CA; CN; EP; HK; ID; IL; IN; KR; MX; MY; NZ; PH; RU; SG; TW; UA; VN
	Concurrent transmission of ACK/NACK, CQI and CQI from user equipment	US20100232311*	
	Control information allocation method in a communications system	JP2011-514727	US20090196247; BR; CA; CN; EP; IN; KR; RU; SG; TW
	Method and apparatus for sending and receiving random access response in a wireless communication system	JP2011-509565	US20090156194; AU; BR; CA; CN; EP; HK; ID; IL; IN; KR; MX; MY; NZ; RU; SG; TW; UA; VN
	Method and apparatus for transfer of a message on a common control channel for random access in a wireless communication network	JP2011-508538	US20090163211; AU; BR; CA; CN; EP; HK; ID; IL; IN; KR; MX; MY; NZ; PH; RU; SG; TW; UA; VN
	System information modification notification and detection in wireless communications	JP2011-512709	US20090181661; AU; BR; CA; CN; EP; HK; ID; IL; IN; KR; MX; MY; NZ; PH; RU; SG; TW; UA; VN

*[20]: These patents are applied to the revised part of ARIB STD-T95 Ver.2.0.

Attachment 2 List of Essential Industrial Property Rights (selection of option 2)

特許出願人 PATENT HOLDER	発明の名称 NAME OF PATENT	出願番号等 REGISTRATION NO./ APPLICATION NO.	備考 （出願国名） REMARKS
QUALCOMM Incorporated *[20]	Policy control and charging (PCC) rules based on mobility protocol	JP2011-514029	US20090182883; AU; BR; CA; CN; EP; HK; ID; IL; IN; KR; MX; MY; NZ; PH; RU; SG; TW; UA; VN
	Wireless network synchronization	JP2011-514716	US20090196277; AU; BR; CA; CN; EP; HK; ID; IL; IN; KR; MX; MY; NZ; PH; RU; SG; TW; UA
	Configuring an identifier for an access point of a FEMTO cell	JP2011-504351	US20090129291; AU; BR; CA; CN; EP; HK; ID; IL; IN; KR; MX; MY; NZ; PH; RU; SG; TW; UA; VN
	Enhanced multiplexing system and technique for uplink control channels	JP2011-511603	US20090201869; AU; BR; CA; CN; EP; HK; ID; IL; IN; KR; MX; MY; NZ; PH; RU; SG; TW; UA; VN
	Policy control for encapsulated data flows	JP2011-517864	US20090199268; AU; BR; CA; CN; EP; HK; ID; IL; IN; KR; MX; MY; NZ; PH; RU; SG; TW; UA; VN
	Methods and apparatus for controlling transmission of a base station	JP2011-514758	US20090213825; AU; BR; CA; CN; EP; HK; ID; IL; IN; KR; MX; MY; NZ; RU; SG; TW; UA; VN
	Methods and systems for parallel acquistion of system information from multiple base stations	JP2011-527905	US20100067448; BR; CA; CN; EP; IN; KR; RU; SG; TW
	Transmission and reception of dedicated reference signals	JP2011-519509	US20100062783; AU; BR; CA; CN; EP; HK; ID; IL; IN; KR; MX; MY; NZ; PH; RU; SG; TW; UA; VN

*[20]: These patents are applied to the revised part of ARIB STD-T95 Ver.2.0.

Attachment 2 List of Essential Industrial Property Rights (selection of option 2)

特許出願人 PATENT HOLDER	発明の名称 NAME OF PATENT	出願番号等 REGISTRATION NO./ APPLICATION NO.	備考 （出願国名） REMARKS
QUALCOMM Incorporated *[20]	Providing multiple levels of service for wireless communication	JP2011-519195	US20090232019; AU; BR; CA; CN; EP; HK; ID; IL; IN; KR; MX; MY; NZ; PH; RU; SG; TW; UA; VN
	Dynamic assignment of ACK resource in a wireless communication system	JP2011-517191	US20090245194; AU; BR; CA; CN; EP; HK; ID; IL; IN; KR; MX; MY; NZ; PH; RU; SG; TW; UA; VN
	Method of network management by assistance from terminal using control-plane signaling between terminal and network	JP2011-515955	US20090257353; AU; BR; CA; CN; EP; HK; ID; IL; IN; KR; MX; MY; NZ; PH; RU; SG; TW; UA; VN
	Filtering semi-persistent scheduling false alarms	JP2011-515959	US20090257385; AU; BR; CA; CN; EP; HK; ID; IL; IN; KR; MX; MY; NZ; PH; RU; SG; TW; UA; VN
	Method and apparatus for resource management in a wireless communication system	JP2011-517892	US20090238131; AU; BR; CA; CN; EP; HK; ID; IL; IN; KR; MX; MY; NZ; PH; RU; SG; TW; UA; VN
	Cell selection and reselection in deployments with home nodeBs	JP2011-518472	US20090238114; AU; BR; CA; CN; EP; HK; ID; IL; IN; KR; MX; MY; NZ; PH; RU; SG; TW; UA; VN
	Dynamic home network assignment	JP2011-519198	US20090238099; AU; BR; CA; CN; EP; HK; ID; IL; IN; KR; MX; MY; NZ; PH; RU; SG; TW; UA; VN
	Device managed access point lists in wireless communications	JP2011-517186	US20090245176; AU; CA; CN; EP; HK; ID; IL; IN; KR; MX; MY; NZ; PH; RU; SG; TW; UA; VN

*[20]: These patents are applied to the revised part of ARIB STD-T95 Ver.2.0.

Attachment 2 List of Essential Industrial Property Rights (selection of option 2)

特許出願人 PATENT HOLDER	発明の名称 NAME OF PATENT	出願番号等 REGISTRATION NO./ APPLICATION NO.	備考 （出願国名） REMARKS
QUALCOMM Incorporated *[20]	Encoding and decoding of control information for wireless communication	JP2011-518496	US20090245284; AU; BR; CA; CN; EP; HK; ID; IL; IN; KR; MX; MY; NZ; PH; RU; SG; TW; UA; VN
	Method and apparatus for mapping virtual resources to physical resources in a wireless communication system	JP2011-516006	US20090245193; AU; CA; CN; EP; HK; ID; IL; IN; KR; MX; MY; NZ; PH; RU; SG; TW; UA; VN
	Scrambling and modulation to constrain the constellation size of ACK/NAK transmission on the data channel	JP2011-516008	US20090245421; AU; BR; CA; CN; EP; HK; ID; IL; IN; KR; MX; MY; NZ; PH; RU; SG; TW; UA; VN
	Method and apparatus for resource allocation in wireless communication systems	JP2011-519200	US20090279493; AU; CA; CN; EP; HK; ID; IL; IN; KR; MX; MY; NZ; RU; SG; TW; UA; VN
	Methods of reliably sending control signal	JP2011-519205	US20090257449; AU; BR; CA; CN; EP; HK; ID; IL; IN; KR; MX; MY; NZ; PH; RU; SG; TW; UA; VN
	Method and system for facilitating execution of automatic neighbor relation functions	JP2011-517905	US20090247159; AU; BR; CA; CN; EP; HK; ID; IL; IN; KR; MX; MY; NZ; RU; SG; TW; UA; VN
	Determinative segmentation resegmentation and padding in radio link control (RLC) service data units (SDU)	JP2011-517904	US20090252182; AU; BR; CA; CN; EP; HK; ID; IL; IN; KR; MX; MY; NZ; RU; SG; TW; UA; VN
	Generic positioning protocol	JP2011-523244	US20090253440; BR; CA; CN; EP; IN; KR; RU; SG; TW

*[20]: These patents are applied to the revised part of ARIB STD-T95 Ver.2.0.

Attachment 2 List of Essential Industrial Property Rights (selection of option 2)

特許出願人 PATENT HOLDER	発明の名称 NAME OF PATENT	出願番号等 REGISTRATION NO./ APPLICATION NO.	備考 （出願国名） REMARKS
QUALCOMM Incorporated *[20]	Using multicast broadcast single frequency network (MBSFN) subframes to send unicast information	JP2011-521512	US20090252077; AU; BR; CA; CN; EP; ID; IL; IN; KR; MX; MY; NZ; PH; RU; SG; TW; UA; VN
	Systems and methods to define control channels using reserved resource blocks	JP2011-517234	US20090257388; AU; BR; CA; CN; EP; HK; ID; IL; IN; KR; MX; MY; NZ; PH; RU; SG; TW; UA; VN
	Selective bearer establishment in evolved universal terrestrial radio access (E-UTRA) and evolved packet system (EPS)	JP2011-517217	US20090252132; AU; BR; CA; CN; EP; HK; ID; IL; IN; KR; MX; MY; NZ; PH; RU; SG; TW; UA; VN
	Method and apparatus for management of automatic neighbor relation function in wireless networks	JP2011-518531	US20090264130; AU; BR; CA; CN; EP; HK; ID; IL; IN; KR; MX; MY; NZ; PH; RU; SG; TW; UA; VN
	Methods and apparatuses for uplink control and data transmission in a mixed single and multiple carrier network	WO2011011636*	US20110176498; TW
	Partial radio link control status report	JP2011-521537	US20090268683; AU; BR; CA; CN; EP; HK; ID; IL; IN; KR; MX; MY; NZ; PH; RU; SG; TW; UA; VN
	Method and apparatus for uplink ACK/NACK resource allocation	JP2011-520360	US20090274109; AU; BR; CA; CN; EP; HK; ID; IL; IN; KR; MX; MY; NZ; PH; RU; SG; TW; UA; VN
	Autonomous downlink code selection for FEMTO cells	JP2011-522468	US20100118801; AU; BR; CA; CN; EP; HK; ID; IL; IN; KR; MX; MY; NZ; PH; RU; SG; TW; UA; VN

*[20]: These patents are applied to the revised part of ARIB STD-T95 Ver.2.0.

Attachment 2 List of Essential Industrial Property Rights (selection of option 2)

特許出願人 PATENT HOLDER	発明の名称 NAME OF PATENT	出願番号等 REGISTRATION NO./ APPLICATION NO.	備考 （出願国名） REMARKS
QUALCOMM Incorporated *[20]	Anchor carrier in a multiple carrier wireless communication system	JP2011-523074	US20100034163; AU; BR; CA; CN; EP; HK; ID; IL; IN; KR; MX; MY; NZ; PH; RU; SG; TW; UA; VN
	Multi-carrier design for control and procedures comprising pairing of carriers	JP2011-523073	US20100035625; AU; BR; CA; CN; EP; HK; ID; IL; IN; KR; MX; MY; NZ; PH; RU; SG; TW; UA; VN
	Downlink grants in a multicarrier wireless communication system	JP2011-523072	US20100034303; AU; BR; CA; CN; EP; HK; IL; IN; KR; NZ; PH; RU; SG; TW
	Multi-carrier grant design	JP2011-523142	US20100040004; AU; BR; CA; CN; EP; HK; ID; IL; IN; KR; MX; MY; NZ; PH; RU; SG; TW; UA; VN
	A method and apparatus for PCC enhancement for flow based mobility	JP2011-523332	US20090305701; AU; BR; CA; CN; EP; HK; ID; IL; IN; KR; MX; MY; NZ; PH; RU; SG; TW; UA; VN
	Correlating registrations originating from a device	JP2011-522247	US20100197305; BR; CA; CN; EP; IN; KR; RU; SG; TW
	Using identifiers to establish communication	JP2011-504690	US20090132675; AU; BR; CA; CN; EP; HK; ID; IL; IN; KR; MX; MY; NZ; PH; RU; SG; TW; UA; VN
	Registration and access control in FEMTO cell deployments	JP2011-523308	US20090305699; AU; BR; CA; CN; EP; HK; ID; IL; IN; KR; MX; MY; NZ; PH; RU; SG; TW; UA; VN

*[20]: These patents are applied to the revised part of ARIB STD-T95 Ver.2.0.

Attachment 2 List of Essential Industrial Property Rights (selection of option 2)

特許出願人 PATENT HOLDER	発明の名称 NAME OF PATENT	出願番号等 REGISTRATION NO./ APPLICATION NO.	備考 （出願国名） REMARKS
QUALCOMM Incorporated *[20]	Method and apparatus for managing interaction between DRX cycles and paging cycles	JP2011-524693	US20090310503; BR; CA; CN; EP; IN; KR; RU; SG; TW
	Apparatus and method for generating performance measurements in wireless networks	JP2011-525326	US20090310501; BR; CA; CN; EP; IN; KR; RU; SG; TW
	Conveying session continuity information in a multi-component communication session	JP2011-525752	US20090319676; AU; BR; CA; CN; EP; HK; ID; IL; IN; KR; MX; MY; NZ; PH; RU; SG; TW; UA; VN
	System and method for network management	JP2011-520241	US20100022263; AU; BR; CA; CN; EP; ID; IL; IN; KR; MX; MY; NZ; PH; RU; SG; TW; UA; VN
	Coordinated transmission between cells of a base station in a wireless communications system	JP2011-522228	US20100035600; BR; CA; CN; EP; IN; KR; RU; SG; TW
	Method and apparatus for power control of first data transmission in random access procedure of FDMA communication system	JP2011-525786	US20100041428; AU; BR; CA; CN; EP; HK; ID; IL; IN; KR; MX; MY; NZ; PH; RU; SG; TW; UA; VN
	Network element configuration scheme	JP2011-527162	US20100002603; AU; BR; CA; CN; EP; HK; ID; IL; IN; KR; MX; MY; NZ; PH; RU; SG; TW; UA; VN
	Method and apparatus for handling measurement gaps in wireless networks	JP2011-522282	US20100034126; BR; CA; CN; EP; IN; KR; RU; SG; TW
	Method and apparatus for initiating random access procedure in wireless networks	JP2011-522187	US20100034141; BR; CA; CN; EP; IN; KR; RU; SG; TW

*[20]: These patents are applied to the revised part of ARIB STD-T95 Ver.2.0.

Attachment 2 List of Essential Industrial Property Rights (selection of option 2)

特許出願人 PATENT HOLDER	発明の名称 NAME OF PATENT	出願番号等 REGISTRATION NO./ APPLICATION NO.	備考 （出願国名） REMARKS
QUALCOMM Incorporated *[20]	Methods and apparatuses for requesting/providing assistance data associated with various satellite positioning systems in wireless communication networks	JP2011-528785	US20100013701; BR; CA; CN; EP; IN; KR; RU; SG; TW
	Cell identifier assignment and selection	JP2011-520240	US20100020710; AU; BR; CA; CN; EP; ID; IL; IN; KR; MX; MY; NZ; RU; SG; TW; UA; VN
	RNTI-dependent scrambling sequence initialization	JP2011-522275	US20100034161; AU; BR; CA; CN; EP; HK; ID; IL; IN; KR; MX; MY; NZ; PH; RU; SG; TW; UA; VN
	Processing polling requests from radio link control peers	JP2011-522293	US20100034095; BR; CA; CN; EP; IN; KR; RU; SG; TW
	Intra-frequency cell reselection restriction in wireless communications	JP2011-522074	US20100035615; CN; EP; IN; KR; TW
	Utilizing HARQ for uplink grants received in wireless communications	JP2011-522283	US20100037113; AU; BR; CA; CN; EP; ID; IL; IN; KR; MX; MY; NZ; RU; SG; TW; UA; VN
	Methods and apparatuses for processing measurement gaps in a wireless communication system	JP2011-523125	US20100034158; AU; BR; CA; CN; EP; HK; ID; IL; IN; KR; MX; MY; PH; RU; SG; TW; UA; VN
	System, methods and apparatus for facilitating buffer status report robustness	JP2011-523123	US20100034147; AU; BR; CA; CN; EP; HK; ID; IL; IN; KR; MX; MY; NZ; PH; RU; SG; TW; UA; VN

*[20]: These patents are applied to the revised part of ARIB STD-T95 Ver.2.0.

Attachment 2 List of Essential Industrial Property Rights (selection of option 2)

特許出願人 PATENT HOLDER	発明の名称 NAME OF PATENT	出願番号等 REGISTRATION NO./ APPLICATION NO.	備考 （出願国名） REMARKS
QUALCOMM Incorporated *[20]	Handling uplink grant in random access response	JP2011-523141	US20100040001; AU; BR; CA; CN; EP; HK; ID; IL; IN; KR; MX; MY; RU; SG; TW; UA; VN
	Control plane solution for location service to support wireless access	JP2011-523916	US20100041418; CA; EP; TW
	Efficiently identifying system waveform in uplink transmission	JP2011-527009	US20100067591; CN; EP; IN; KR; TW
	Interference management for different wireless communication technologies	JP2011-527008	US20100067469; BR; CA; CN; EP; IN; KR; RU; SG; TW
	Method and apparatus for managing a new data indicator in a wireless communication system	JP2011-526311	US20100067468; AU; BR; CA; CN; EP; HK; ID; IL; IN; KR; MX; MY; PH; RU; SG; TW; UA; VN
	Reference signal design for LTE advanced	JP2011-528017	US20100075706; AU; BR; CA; CN; EP; HK; ID; IN; KR; MX; MY; RU; SG; TW; ZA
	Apparatus and method for facilitating transmit diversity for communications	JP2011-529195	US20100074210; BR; CA; CN; EP; ID; IL; IN; KR; MY; PH; RU; TW; ZA
	Highly detectable pilot structure	JP2011-529193	US20100074344; BR; CN; EP; IN; KR; TW
	Synchronizing a base station in a wireless communication system	JP2011-528005	US20100074180; BR; CA; CN; EP; ID; IN; KR; PH; RU; TW; ZA

*[20]: These patents are applied to the revised part of ARIB STD-T95 Ver.2.0.

Attachment 2 List of Essential Industrial Property Rights (selection of option 2)

特許出願人 PATENT HOLDER	発明の名称 NAME OF PATENT	出願番号等 REGISTRATION NO./ APPLICATION NO.	備考 （出願国名） REMARKS
QUALCOMM Incorporated *[20]	Network and mobile device initiated quality of service	JP2011-528018	US20100074109; AU; BR; CA; CN; EP; ID; IL; IN; KR; MX; MY; PH; RU; SG; TW; UA; VN
	Method and apparatus for reducing successive pre-registration attempts by access terminals	JP2011-529197	US20100075680; CN; EP; IN; KR; TW
	Synchronizing bearer context	JP2011-529333	US20100081444; AE; BR; CA; CN; EP; ID; IN; KR; MY; PH; RU; TW; VN; ZA
	System and methods to facilitate connections to access networks	JP2011-542279	US20100205099; AE; AU; BR; CA; CN; EP; ID; IL; IN; KR; MX; MY; PH; RU; SG; UA; VN; ZA
	Methods and apparatus for system selection in a multimode wireless device	JP2011-533345	US20100099412; AE; AU; BR; CA; CN; EP; ID; IN; KR; RU; TW; UA; VN; ZA
	Support for multiple access modes for home base stations	JP2011-534829	US20100112980; AE; AU; BR; CA; CN; EP; ID; IN; KR; RU; TW; ZA
	A method and apparatus for supporting the large service data unit (SDU)	JP2011-535760	US20100135212; CN; EP; IN; KR; TW
	Transport block size (TBS) signaling enhancement	JP3850826	US7,289,452; AU; BR; CA; CN; DE; EP; ES; FR; GB; HK; HU; IN; IT; KR; MX; MY; NL; RO; RU; TW

*[20]: These patents are applied to the revised part of ARIB STD-T95 Ver.2.0.

Attachment 2 List of Essential Industrial Property Rights (selection of option 2)

特許出願人 PATENT HOLDER	発明の名称 NAME OF PATENT	出願番号等 REGISTRATION NO./ APPLICATION NO.	備考 （出願国名） REMARKS
QUALCOMM Incorporated *[20]	Diversity transmitter and diversity transmission method	JP3978426	US7,158,579; US7,623,590; US20100098187; BE; CA; CN; DE; EP; ES; FR; GB; ID; IE; IN; IT; KR; NL; SE
	Signalling method	JP3502604	US6,751,227; USRE41,773; AT; AU; BR; CA; CH; CN; DE; EP; ES; FI; FR; GB; IT; KR; MX; NL; SE; TR
	Transporting QoS Mapping Information in a Packet Radio Network	JP3625769	US7,167,447; US20060126547; AU; BE; CA; CH; CN; DE; EP; ES; FI; FR; GB; IT; MX
	Measurement reporting in a telecommunication system	JP4122132	US7,003,290; US7,499,701; CA; CN; DE; EP; ES; FI; FR; GB; HK; IT; NL; SE
	Services on demand in mobile communications system	JP2009-144220	US6,957,063; US7,266,366; US7,873,354; BE; CN; DE; EP; ES; FI; FR; GB; IE; IT; NL; SE
	A method for controlling connections to a mobile station	JP3515073	US6,807,421; US7,684,361; JP; BE; BR; CN; DE; EP; ES; FI; FR; GB; IT; NL; SE
	Radio resource management	JP4619621	US7,072,663; JP; AU; BR; CA; CN; DE; EP; FR; GB; IT; NL; RU
	A method for initiating in a terminal of a cellular network the measurement of power levels of signals and a terminal	JP2006-129531	US7,096,021; AT; BR; CA; CH; CN; DE; EP; ES; FI; FR; GB; IT; KR; NL; SE

*[20]: These patents are applied to the revised part of ARIB STD-T95 Ver.2.0.

Attachment 2 List of Essential Industrial Property Rights (selection of option 2)

特許出願人 PATENT HOLDER	発明の名称 NAME OF PATENT	出願番号等 REGISTRATION NO./ APPLICATION NO.	備考 （出願国名） REMARKS
QUALCOMM Incorporated *[20]	Data and control multiplexing in wireless communications	WO2010129605*	US20110110296; JP; CN; IN; TW
	Hearability improvements for reference signals	JP2011-544681	US20100172311; AE; BR; CA; CN; EP; ID; IN; KR; MX; PH; RU; TW; ZA
	Provision of inter-frequency subframe configuration in wireless communication	JP2011-544663	US20100172272; CN; EP; IN; KR; TW
	Method and apparatus for computing and reporting channel quality indication (CQI)	JP2011-545483	US20100177653; CN; EP; IN; KR; TW
	Frequency hopping in a wireless communication network	JP2011-547927	US20100189032; CA; CN; EP; ID; IN; KR; MY; RU; TW; UA; ZA
	Flexible data and control multiplexing	US20100214938*	JP; BR; CA; CN; EP; ID; IN; KR; PH; RU; TW; ZA
	Antenna virtualization in a wireless communication environment	JP2011-548403	US20100202560; AE; BR; CA; CN; EP; ID; IN; KR; RU; TW; ZA
	PCFICH design for multicarrier operation	WO2010127292*	US20110096734; JP; CN; EP; IN; KR; TW
	Systems, methods and apparatus for facilitating discontinuous reception in a multi-carrier wireless communication system	WO2010129597*	US20110105069; JP; CN; EP; IN; TW
	Method and apparatus for maintaining location continuity for a UE following handover	JP2011-549340	US20100202407; CN; EP; IN; KR; TW

*[20]: These patents are applied to the revised part of ARIB STD-T95 Ver.2.0.

Attachment 2 List of Essential Industrial Property Rights (selection of option 2)

特許出願人 PATENT HOLDER	発明の名称 NAME OF PATENT	出願番号等 REGISTRATION NO./ APPLICATION NO.	備考 （出願国名） REMARKS
QUALCOMM Incorporated *[20]	Multiplexing and coding schemes for multiple transmit antennas in a wireless communication system	JP2011-549336	US20100202559; CN; EP; IN; KR; TW
	Managing access control to closed subscriber groups	JP2011-549342	US20100203865; CN; EP; IN; KR; TW
	Fall back using mobile device assisted terminating access domain selection	WO2010115045*	US20100303012; JP; BR; CA; CN; EP; ID; IL; IN; KR; PH; RU; UA; ZA
	Timing adjustment for synchronous operation in a wireless network	US20100222068*	JP; BR; CN; EP; IN; KR; TW
	Discontinuous uplink transmission operation and interference avoidance for a multi-carrier system	US20100260121*	JP; CN; EP; IN; KR; TW
	Methods and apparatus for adjacent channel interference mitigation in access point base stations	WO2010105232*	US20100234040; JP; BR; CN; EP; IN; KR; TW
	Method and apparatus for handling inconsistent control information in a wireless communication system	US20100238823*	JP; AE; AU; BR; CA; CN; EP; ID; IN; KR; MY; PH; RU; TH; TW; ZA
	Method and apparatus for uplink power control in a multicarrier wireless communication system	WO2010129616*	US20110111788; JP; AE; BR; CA; CN; EP; ID; IN; MY; PH; TW; ZA
	Re-establishment procedure for an emergency call	WO2010115155*	US20100255807; JP; CN; EP; IN; KR; TW
	Methods and apparatus for generation and use of reference signals in a communications system	WO2010120530*	US20100246527; JP; BR; CA; CN; EP; ID; IL; IN; KR; MY; PH; RU; TH; TW; ZA

*[20]: These patents are applied to the revised part of ARIB STD-T95 Ver.2.0.

Attachment 2 List of Essential Industrial Property Rights (selection of option 2)

特許出願人 PATENT HOLDER	発明の名称 NAME OF PATENT	出願番号等 REGISTRATION NO./ APPLICATION NO.	備考 （出願国名） REMARKS
QUALCOMM Incorporated *[20]	Conveying synchronization stratum information	WO2010118261*	US20100260168; JP; AU; CA; CN; EP; ID; IN; KR; PH; TH; TW; ZA
	Minimizing the impact of self synchronization on wireless communication devices	WO2010118260*	US20100260169; JP; BR; CN; EP; IN; KR; TW
	Control of radio links in a multiple carrier system	WO2010120981*	US20100271939; JP; CN; EP; IN; KR; TW
	Method, apparatus and computer program product for determining QOS of communications based on CSG membership	WO2010121198*	US20100265827; JP; BR; CN; EP; IN; KR; TW
	Systems, methods, and devices to enable selection of radio access technology	WO2010123924*	US20100265914; JP; AE; BR; CA; CN; EP; ID; IN; KR; MY; RU; TW; VN; ZA
	Method and apparatus for control and data multiplexing in a MIMO communication system	WO2010124244*	US20110103498; JP; CA; CN; EP; ID; IN; KR; MX; MY; PH; TH; TW; ZA
	Establishing packet data network connectivity for local internet protocol access traffic	WO2010123643*	US20100272013; JP; AU; BR; CA; CN; EP; ID; IN; KR; PH; TH; TW; VN; ZA
	Systems, apparatus and methods for facilitating emergency call service in wireless communication systems	WO2010127331*	US20100279648; JP; AE; CA; CN; EP; ID; IN; KR; TH; TW; ZA
	Transmission and detection of overhead channels and signals in a wireless network	WO2010127332*	US20100278132; JP; BR; CN; EP; IN; KR; TW

*[20]: These patents are applied to the revised part of ARIB STD-T95 Ver.2.0.

Attachment 2 List of Essential Industrial Property Rights (selection of option 2)

特許出願人 PATENT HOLDER	発明の名称 NAME OF PATENT	出願番号等 REGISTRATION NO./ APPLICATION NO.	備考 （出願国名） REMARKS
QUALCOMM Incorporated *[20]	PDCCH search space design for LTE-A multi-carrier operation	WO2010127300*	US20110110316; JP; CN; EP; IN; KR; TW
	Semi-persistent scheduling for multi-carrier wireless communication	WO2010129617*	US20110116454; JP; CN; IN; TW
	Multicarrier retransmission feedback	WO2010129810*	US20110116457; JP; BR; CA; CN; EP; IN; MY; PH; TH; TW; ZA
	Transaction management	WO2010135473*	US20110130157; JP; AE; CA; CN; EP; IN; MY; PH; SG; TW
	Method and apparatus for assisted positioning in a wireless communication system	US20110117925*	
	Downlink control channel for relay resource allocation	WO2011005787*	US20110164550; TW
	Low reuse preamble	WO2011008878*	US20110013531; TW
	Synchronization of devices in a wireless communication network	WO2011011760*	US20110176483; TW
	Determining control region parameters for multiple transmission points	WO2011014829*	US20110026473; TW
	Resource specification for broadcast/multicast services	WO2011019977*	US20110194477; TW
	Method and apparatus for uplink power control for multiple transmit antennas	WO2011017462*	US20110044296; TW

*[20]: These patents are applied to the revised part of ARIB STD-T95 Ver.2.0.

Attachment 2 List of Essential Industrial Property Rights (selection of option 2)

特許出願人 PATENT HOLDER	発明の名称 NAME OF PATENT	出願番号等 REGISTRATION NO./ APPLICATION NO.	備考 （出願国名） REMARKS
QUALCOMM Incorporated *[20]	Multiple carrier indication and downlink control information interaction	WO2011032035*	US20110070845; TW
	Signaling identification of machine to machine devices and services	WO2011041459*	US20110256896; TW
	Uplink control channel resource allocation for transmit diversity	WO2011041445*	US20110228731; TW
	UE-RS sequence initialization for wireless communication systems	WO2011041544*	US20110237267; TW
	Methods and apparatuses for rate adaption in response to network congestion	WO2011041519*	US20110075563; TW
	Carrier indicator field for cross carrier assignments	WO2011044038*	US20110080883; TW
	Resource management and admission control for non-members of a closed subscriber group in home radio access networks	WO2011059764*	US20110218004; TW
	Method, apparatuses and computer program product for a circuit switched fallback procedure handling conflict when handover occurs during CS fallback	WO2011053849*	US20110216645; TW
	Method and apparatus for managing a select IP traffic offload for mobile communications based on user location	WO2011069119*	US20110235546; TW

*[20]: These patents are applied to the revised part of ARIB STD-T95 Ver.2.0.

Attachment 2 List of Essential Industrial Property Rights (selection of option 2)

特許出願人 PATENT HOLDER	発明の名称 NAME OF PATENT	出願番号等 REGISTRATION NO./ APPLICATION NO.	備考 （出願国名） REMARKS
QUALCOMM Incorporated *[20]	Apparatus and method for assigning frequency to support high-speed downlink packet access service in orthogonal frequency division multiplexing mobile communication system	JP4243264	US7,826,415; AU; EP; IN; KR
	Method for configuring and managing channel in a wireless communication system using AMC channel and diversity channel, transmission/reception apparatus therefor, and system thereof	JP2008-541548	US20060268983; AU; BR; IN; KR; RU
	Methods and apparatus for channel quality indication feedback in a communication system	JP2011-509559	US20090163142; CN; EP; IN; KR
	Method and apparatus for multiplexing data and control information in wireless communication systems based on frequency division multiple access	JP4319665	US7,613,245; US7,697,631; US7,929,590; US20110170533; AU; CN; EP; IN; KR; RU
	Appareil et procede de generation de turbocodes quasi complimentaires	JP3636708	US7,093,185; US7,200,796; JP; AU; BR; CA; CN; DE; EP; FI; FR; GB; IN; IT; KR; RU; SE
	Method and apparatus for managing local internet protocol offload	WO2011130294*	US13/080,479; AR; TW
	Method and apparatus for transmitting the sync channel message in a multi-carrier communication system	JP4499299	US6,925,067; US7,486,653; US7,447,189; US7,508,790; US20090059893; AU; BR; CA; CN; EP; HK; ID; IN; KR; MX; NO; RU; SG; TW; UA

*[20]: These patents are applied to the revised part of ARIB STD-T95 Ver.2.0.

Attachment 2 List of Essential Industrial Property Rights (selection of option 2)

特許出願人 PATENT HOLDER	発明の名称 NAME OF PATENT	出願番号等 REGISTRATION NO./ APPLICATION NO.	備考 （出願国名） REMARKS
QUALCOMM Incorporated *[20]	Method and apparatus for estimating reverse link loading in a wireless communication system	JP4668491	US6,397,070; BR; CN; EP; HK; KR; TW
	Method and apparatus for beamforming in a wireless communication system	JP2011-055507	US6,778,507; JP; BR; CN; DE; EP; FR; GB; HK; KR; TW
	Method and apparatus for providing mobility within a network	JP4638109	US6,366,561; US7,272,138; JP; AU; BR; CN; DE; EP; FR; GB; HK; KR
	Method and apparatus for concurrently processing multiple calls in a spread spectrum communications system	JP4307772	US6,625,198; US7,184,459; US7,466,741; JP; AU; BR; CA; CN; DE; EP; FI; FR; GB; HK; ID; IL; IN; IT; KR; MX; NO; RU; SE; SG; TW; UA
	Transmission method in multiplex-antenna communications system, base station, and the multiplex-antenna communications system	JP4851124	US6,473,467; JP; AT; AU; BE; BR; CA; CH; DE; DK; EP; ES; FI; FR; GB; GR; HK; ID; IE; IL; IN; IT; KR; MX; NL; NO; PT; RU; SE; SG; TW; UA
	An Improved GPS Receiver Utilizing a Communication Link	JP2000-506348	US5,841,396; US6,064,336; JP; CH; DE; DK; EP; ES; FI; FR; GB; GR; HK; IE; IT; KR; NL; PT; SE
	Method and apparatus for determining time for GPS receivers	JP2001-505665	US5,945,944; US6,150,980; US6,433,734; JP; BE; CH; DE; DK; EP; ES; FI; FR; GB; GR; HK; IE; IT; KR; LI; NL; PT; SE

*[20]: These patents are applied to the revised part of ARIB STD-T95 Ver.2.0.

Attachment 2 List of Essential Industrial Property Rights (selection of option 2)

特許出願人 PATENT HOLDER	発明の名称 NAME OF PATENT	出願番号等 REGISTRATION NO./ APPLICATION NO.	備考 （出願国名） REMARKS
QUALCOMM Incorporated *[20]	Method and apparatus for acquiring satellite positioning system signals	JP2002-532724	US6,133,874; AU; BE; BR; CA; CN; DE; EP; ES; FI; FR; GB; HK; ID; IE; IL; IN; IT; KR; MX; NL; SE; SG
	Method and apparatus for satellite positioning system (SPS) time measurement	JP2003-523500	US6,377,209; US6,583,757; JP; AU; BE; BR; CA; CN; DE; EP; ES; FI; FR; GB; HK; IE; IN; IT; KR; MX; NL; SE
	Call setup latency reduction by encapsulating signalling messages	JP4163108	US6,952,411; BE; BG; CN; CZ; DE; EP; ES; FI; FR; GB; HK; IE; IN; IT; KR; NL; SE; TW
	Method and apparatus for secure data transmission in a mobile communication system	JP2005-537713	US7,185,362; US20070116282; JP; BR; CA; CN; EP; HK; IN; KR; MX; TW
	Method and apparatus for data packet transport in a wireless communications system using an internet protocol	JP2005-534202	US7,184,789; JP; BE; BG; BR; CA; CN; CZ; DE; EP; ES; FI; FR; GB; HK; IE; IL; IN; IT; KR; MX; NL; NO; SE; SG; TW
	Packet flow processing in a communication system	JP2005-529554	US20060256719; US20110273984; JP; BR; CN; DE; EP; GB; HK; KR; TW
	User terminal-initiated hard handoff from a wireless local area network to a cellular network	JP2009-512354	US7,706,796; US20110064058; JP; CN; EP; IN; KR
	Power control using erasure techniques	JP4643636	US7,536,626; JP; AR; AU; BR; CA; CN; EP; HK; ID; IL; IN; KR; MX; NO; NZ; PH; RU; SG; TW; UA; VN; ZA

*[20]: These patents are applied to the revised part of ARIB STD-T95 Ver.2.0.

Attachment 2 List of Essential Industrial Property Rights (selection of option 2)

特許出願人 PATENT HOLDER	発明の名称 NAME OF PATENT	出願番号等 REGISTRATION NO./ APPLICATION NO.	備考 （出願国名） REMARKS
QUALCOMM Incorporated *20	Robust erasure detection and erasure-rate-based closed loop power control	JP4575442	US7,197,692; US20070150799; US20110296279; AR; AU; BR; CA; CL; CN; EP; HK; ID; IL; IN; KR; MX; NO; NZ; PH; RU; SG; TW; UA; VN; ZA
	Power control for a wireless communication system utilizing orthogonal multiplexing	JP4616339	US20060019694; US20090023466; US20080214121; JP; AR; AU; BE; BG; BR; CA; CL; CN; CZ; DE; EP; ES; FI; FR; GB; HK; HU; ID; IE; IL; IN; IT; KR; MX; NL; NO; NZ; PH; PL; RO; RU; SG; TW; UA; VN; ZA
	Systems and methods for providing channel quality feedback for downlink MIMO transmission adjustment	JP2010-502121	US20070105503; CN; EP; HK; IN; KR; TW
	Multiplexing of W-CDMA and OFDM signals in a wireless communication system	JP2008-502225	US7,920,884; JP; AU; BR; CA; CN; EP; HK; ID; IL; IN; KR; MX; MY; RU; TW; UA
	Transmission of overhead information for broadcast and multicast services in a wireless communication system	JP4653165	US20060018269; AU; BR; CA; CN; EP; HK; ID; IL; IN; KR; MX; MY; RU; TW; UA
	Wireless communication system with configurable cyclic prefix length	JP4612046	US20060013325; JP; AU; BR; CA; CN; EP; HK; ID; IL; IN; KR; MX; MY; RU; TW; UA
	Coding and modulation for broadcast and multicast services in a wireless communication system	JP2008-502220	US20060013168; JP; AU; BR; CA; CN; EP; HK; ID; IL; IN; KR; MX; MY; RU; TW; UA

*[20]: These patents are applied to the revised part of ARIB STD-T95 Ver.2.0.

Attachment 2 List of Essential Industrial Property Rights (selection of option 2)

特許出願人 PATENT HOLDER	発明の名称 NAME OF PATENT	出願番号等 REGISTRATION NO./ APPLICATION NO.	備考 （出願国名） REMARKS
QUALCOMM Incorporated *[20]	Multicarrier Modulation System with Cyclic Delay Diversity	JP2008-502223	US20060013186; US20090304120; AU; BR; CA; CN; EP; HK; ID; IL; IN; KR; MX; MY; RU; TW; UA
	Interference control in a wireless communication system	JP2008-533924	US20060285503; AR; AU; BR; CA; CL; CN; EP; HK; ID; IL; IN; KR; MX; NO; NZ; PH; RU; SG; TH; TW; UA; VN
	Pilot signal transmission for an orthogonal frequency division wireless communication system	JP2009-514459	US20060209732; AR; AU; BR; CA; CN; DE; EP; GB; HK; ID; IL; IN; KR; MX; MY; NO; NZ; PH; RU; SG; TW; UA; VN
	Pilot signal transmission for an orthogonal frequency division wireless communication system	JP2008-533928	US20060209670; BR; CA; CL; CN; EP; HK; IN; KR; RU; SG; TH; TW
	Pilot signal transmission for an orthogonal frequency division wireless communication system	JP2008533927	US20060209973; JP; AR; BE; BG; BR; CN; CZ; DE; EP; ES; FI; FR; GB; HU; IE; IN; IT; KR; MY; NL; PL; RO; RU; SE; SG; TW
	Systems and methods for beamforming in multi-input multi-output communication systems	JP4723632	US20060203794; JP; AR; AU; BR; CA; CN; EP; HK; ID; IL; IN; KR; MX; MY; NO; NZ; PH; RU; SG; TW; UA; VN
	Systems and methods for beamforming and rate control in a multi-input multi-output communication systems	JP4768805	US20060203891; AR; AU; BR; CA; CN; EP; HK; ID; IL; KR; MX; MY; NO; NZ; PH; RU; SG; TH; UA; VN

*[20]: These patents are applied to the revised part of ARIB STD-T95 Ver.2.0.

Attachment 2 List of Essential Industrial Property Rights (selection of option 2)

特許出願人 PATENT HOLDER	発明の名称 NAME OF PATENT	出願番号等 REGISTRATION NO./ APPLICATION NO.	備考 （出願国名） REMARKS
QUALCOMM Incorporated *[20]	Frequency hopping design for IFDMA, LFDMA and OFDMA systems	JP2008-538488	US20060233124; US13/299,898; JP; BE; BG; CN; CZ; DE; EP; ES; FI; FR; GB; HK; HU; IE; IN; IT; KR; NL; PL; RO; SE; TW
	Method and Apparatus for Locating a Wireless Local Area Network in a Wide Area Network	JP4791545	US20070019586; AR; AU; BR; CA; CN; EP; HK; ID; IL; IN; KR; MX; NO; NZ; PH; RU; SG; TW; UA; VN
	Method and Apparatus for Maintaining a Fingerprint for a Wireless Network	JP4791546	US20070021126; AR; AU; BR; CA; CN; EP; HK; ID; IL; IN; KR; MX; NO; NZ; PH; RU; SG; TW; UA; VN
	Resource allocation for shared signalin channels in OFDM	JP2009-514455	AU; BR; CA; CL; CN; EP; HK; ID; IL; IN; KR; MX; MY; NO; NZ; PH; RU; SG; TW; UA; VN
	Global navigation satellite system	JP2010-533862	US7,893,869; US20110187593; CN; EP; IN; KR
	Enhanced techniques for using core based nodes for state transfer	JP2011-125049	US7,668,541; US20110019614; JP; CA; CN; EP; HK; IN; KR
	Methods and apparatus for determining, communicating and using information including loading factors for interference control	JP4782841	US20070140168; CL; CN; EP; IN; KR; TH; TW
	Methods and apparatus for determining, communicating and using information including loading factors for interference control	JP2009-512357	US20070104164; CL; CN; EP; IN; KR; TH; TW

*[20]: These patents are applied to the revised part of ARIB STD-T95 Ver.2.0.

Attachment 2 List of Essential Industrial Property Rights (selection of option 2)

特許出願人 PATENT HOLDER	発明の名称 NAME OF PATENT	出願番号等 REGISTRATION NO./ APPLICATION NO.	備考 （出願国名） REMARKS
QUALCOMM Incorporated *[20]	Methods and apparatus for determining, communicating and using information which can be used for interference control purposes	JP2010-507284	US11/549,617; CN; EP; IN; KR
	Methods and apparatus for broadcasting loading information corresponding to neighboring base stations	JP2009-512360	US20070253355; CL; CN; EP; IN; KR; TH; TW
	Methods and apparatus for controlling a base station's transmission power	JP4782842	US20070253385; CL; CN; EP; HK; IN; KR; TH; TW
	Communications methods and apparatus using physical attachment point identifiers	JP2009-521846	US20070147377; BR; CA; CL; CN; EP; HK; IN; KR; RU; SG; TH; TW
	Communications methods and apparatus using physical attachment point identifiers which support dual communications links	JP2009-521866	US20070147286; AR; BR; CN; DE; EP; GB; IN; KR; RU; TW
	Method and apparatus for end node assisted neighbor discovery	JP4733190	US20070147283; AR; BE; BG; BR; CA; CN; CZ; DE; EP; ES; FI; FR; GB; HU; IE; IN; IT; KR; NL; PL; RO; RU; SE; SG; TW
	Methods and apparatus for reporting and/or using control information	JP2009-521861	US20070149128; CN; EP; HK; IN; KR; TW
	Methods and apparatus for communicating backlog related information	JP2009-521856	US20070258365; AR; CN; EP; HK; IN; KR; TH; TW
	Methods and apparatus related to selecting reporting alternative in a request report	JP2009-521897	US20070253358; BE; BG; CN; CZ; DE; EP; ES; FI; FR; GB; HK; HU; IE; IN; IT; KR; NL; PL; RO; SE; TW

*[20]: These patents are applied to the revised part of ARIB STD-T95 Ver.2.0.

Attachment 2 List of Essential Industrial Property Rights (selection of option 2)

特許出願人 PATENT HOLDER	発明の名称 NAME OF PATENT	出願番号等 REGISTRATION NO./ APPLICATION NO.	備考 （出願国名） REMARKS
QUALCOMM Incorporated *[20]	Methods and apparatus related to selecting a request group for a request report	JP2009-521858	US20070253357; CN; DE; EP; GB; HK; IN; KR; TW
	Methods and apparatus for communicating transmission backlog information	JP2009-521870	US20070149129; US20100220626; BE; BG; CN; CZ; DE; EP; ES; FI; FR; GB; HK; HU; IE; IN; IT; KR; NL; PL; RO; SE; TW
	Methods and apparatus for communicating control information	JP2009-521855	US20070149137; BE; BG; CN; CZ; DE; EP; ES; FI; FR; GB; HK; HU; IE; IN; IT; KR; NL; PL; RO; SE; TW
	Methods and apparatus for communicating information utilizing a plurality of dictionaries	JP2009-521873	US20070149138; CN; EP; HK; IN; KR; TW
	Methods and apparatus for selecting control channel reporting formats	JP2009-521871	US20070149132; CN; EP; HK; IN; KR; TW
	Methods and apparatus of implementing and/or using a dedicated control channel	JP2009-521859	US20070149131; BE; BG; CN; CZ; DE; EP; ES; FI; FR; GB; HK; HU; IE; IN; IT; KR; NL; PL; SE; TW
	Method and apparatus for selecting between a plurality of dictionaries	JP2009-521860	US20070249287; BE; BG; CN; CZ; DE; EP; ES; FI; FR; GB; HK; HU; IE; IN; IT; KR; NL; PL; RO; SE; TW
	Methods and apparatus for determining, communicating, and/or using delay information in a wireless communications system	JP2009-521853	US20070249360; AR; CN; DE; EP; GB; HK; IN; KR; TH; TW

*[20]: These patents are applied to the revised part of ARIB STD-T95 Ver.2.0.

Attachment 2 List of Essential Industrial Property Rights (selection of option 2)

特許出願人 PATENT HOLDER	発明の名称 NAME OF PATENT	出願番号等 REGISTRATION NO./ APPLICATION NO.	備考 （出願国名） REMARKS
QUALCOMM Incorporated *[20]	Methods and apparatus determining, communicating, and/or using delay information	JP2009-521872	US20070253449; CN; DE; EP; GB; HK; IN; KR; TH; TW
	Provision of a move indication to a rescource requester	JP2009-509466	US20070086389; CN; EP; IN; KR
	Packet routing in a wireless communications environment	JP2009-509468	US20070076653; BE; BG; CN; CZ; DE; EP; ES; FI; FR; GB; HU; IE; IN; IT; KR; NL; PL; RO; SE
	Provision of QOS treatment based upon multiple requests	JP2009-509467	US20070076658; JP; CN; EP; IN; KR
	Methods and apparatus for supporting quality of service in communication systems	JP2009-533982	US20070243879; CN; EP; IN; KR
	Providing quality of service for various traffic flows in a communications environment	JP2009-533984	US7,907,970; AR; CN; EP; HK; IN; KR; TW
	Methods and systems for processing overhead reduction for control channel packets	JP2009-542126	US20110255522; BR; CA; CN; EP; HK; ID; IL; IN; KR; MX; NO; NZ; PH; RU; SG; TW; VN
	Method and apparatus for low-overhead packet data transmission and control of reception mode	JP2010-501148	US20080056229; AU; BE; BG; BR; CA; CN; CZ; DE; EP; ES; FI; FR; GB; HK; HU; ID; IE; IL; IN; IT; KR; MX; MY; NL; NO; NZ; PH; PL; RO; RU; SE; SG; TW; UA; VN
	Method and apparatus for cell search in an orthogonal wireless communication system	JP2010-508788	US20100103906; AU; BR; CA; CN; EP; HK; ID; IL; IN; KR; MX; MY; NO; NZ; PH; RU; SG; TW; UA; VN

*[20]: These patents are applied to the revised part of ARIB STD-T95 Ver.2.0.

Attachment 2 List of Essential Industrial Property Rights (selection of option 2)

特許出願人 PATENT HOLDER	発明の名称 NAME OF PATENT	出願番号等 REGISTRATION NO./ APPLICATION NO.	備考 （出願国名） REMARKS
QUALCOMM Incorporated *[20]	Reference signal design for cell search in an orthogonal wireless communication system	JP2010-508789	US20100035611; AU; BR; CA; CN; EP; HK; ID; IL; IN; KR; MX; MY; NO; NZ; PH; RU; SG; TW; UA; VN
	Resource requests for a wireless communication system	JP2010-517490	US20080186931; AU; BR; CA; CN; EP; HK; ID; IL; IN; KR; MX; MY; NZ; PH; RU; SG; TW; UA; VN
	Control channel constraints in wireless communications	JP2010-517491	US20080188233; BR; CA; CN; EP; HK; IN; KR; RU; SG; TW
	Cyclic delay diversity and precoding for wireless communication	JP2010-519794	US20080247364; AU; BR; CA; CN; EP; HK; ID; IL; IN; KR; MX; MY; NZ; PH; RU; SG; TW; UA; VN
	Apparatus and method for MIMO transmission with explicit and implicit cyclic delays	JP2010-518757	AU; BR; CA; CN; EP; HK; ID; IL; IN; KR; MX; MY; NZ; PH; RU; SG; TW; UA; VN
	Preamble based uplink power control for LTE	JP2010-518787	US7,986,959; US20110294530; AU; BR; CA; CN; EP; HK; ID; IL; IN; KR; MX; MY; NZ; PH; RU; SG; TW; UA; VN
	Uplink power control for LTE	JP2010-518788	US20080280638; AU; BR; CA; CN; EP; HK; ID; IL; IN; KR; MX; MY; NZ; PH; RU; SG; TW; UA; VN
	Positioning using enhanced pilot signal	JP2011-511502	US20090203386; AU; BR; CA; CN; EP; HK; ID; IL; IN; KR; MX; MY; NZ; PH; RU; SG; TW; UA; VN

*[20]: These patents are applied to the revised part of ARIB STD-T95 Ver.2.0.

Attachment 2 List of Essential Industrial Property Rights (selection of option 2)

特許出願人 PATENT HOLDER	発明の名称 NAME OF PATENT	出願番号等 REGISTRATION NO./ APPLICATION NO.	備考 （出願国名） REMARKS
QUALCOMM Incorporated *20	Method and apparatus for multiplexing and power control of uplink control channels in a wireless communication system	JP2010-529720	US20080287155; CN; EP; HK; IN; KR; TW
	Pilot structures for ACK and CQI in a wireless communication system	JP2010-528534	US20080298502; CN; EP; HK; IN; KR; TW
	Apparatus and method of determining a precoding matrix in a multi-input multi-output (MIMO) system	JP2010-537515	US8,014,265; AU; BR; CA; CN; EP; HK; ID; IL; IN; KR; MX; MY; NZ; PH; RU; SG; TW; UA; VN
	Method and apparatus for beamforming of control information in a wireless communication system	JP2010-537516	US8,009,617; AU; BR; CA; CN; EP; HK; ID; IL; IN; KR; MX; MY; NZ; PH; RU; SG; TW; UA; VN
	Utilizing restriction codes in wireless access point connection attempts	JP2011-504055	US20090137228; AU; BR; CA; CN; EP; HK; ID; IL; IN; KR; MX; MY; NZ; PH; RU; SG; TW; UA; VN
	Favoring access points in wireless communications	JP2011-504056	US20090137249; AU; BR; CA; CN; EP; HK; ID; IL; IN; KR; MX; MY; NZ; PH; RU; SG; TW; UA; VN
	Utilizing broadcast signals to convey restricted association information	JP2011-504057	US20090129338; AU; BR; CA; CN; EP; HK; ID; IL; IN; KR; MX; MY; NZ; PH; RU; SG; TW; UA; VN
	Classifying access points using pilot identifiers	JP2011-504059	US20090135784; AU; BR; CA; CN; EP; HK; ID; IL; IN; KR; MX; MY; NZ; PH; RU; SG; TW; UA; VN

*20: These patents are applied to the revised part of ARIB STD-T95 Ver.2.0.

Attachment 2 List of Essential Industrial Property Rights (selection of option 2)

特許出願人 PATENT HOLDER	発明の名称 NAME OF PATENT	出願番号等 REGISTRATION NO./ APPLICATION NO.	備考 （出願国名） REMARKS
QUALCOMM Incorporated *[20]	Sector identification using sector parameters signatures	JP2011-504689	US20090129327; AU; BR; CA; CN; EP; HK; ID; IL; IN; KR; MX; MY; NZ; RU; SG; TW; UA; VN
	Access management for wireless communication	JP2010-541514	US20090094680; AU; BR; CA; CN; EP; HK; ID; IL; IN; KR; MX; MY; NZ; PH; RU; SG; TW; UA; VN
	Provisioning communication nodes	JP2011-501917	US20090093232; AU; BR; CA; CN; EP; HK; ID; IL; IN; KR; MX; MY; NZ; PH; RU; SG; TW; UA; VN
	Access terminal configuration and access control	JP2010-541515	US20090094351; AU; BR; CA; CN; EP; HK; ID; IL; IN; KR; MX; MY; NZ; RU; SG; TW; UA; VN
	Method and apparatus for supporting positioning for terminals in a wireless network	WO2010124011*	US20110098057; JP; AU; BR; CA; CN; EP; ID; IL; IN; KR; MY; PH; SG; TH; TW; VN; ZA
	Supporting version negotiation for positioning for terminals in a wireless network	US20110212733*	
	Wireless communication paging utilizing multiple types of node identifiers	JP2011-512070	US20090181672; AU; BR; CA; CN; EP; HK; ID; IL; IN; KR; MX; MY; NZ; PH; RU; SG; TW; UA; VN
	Wireless communication paging and registration utilizing multiple types of node identifiers	JP2011-512071	US20100069062; AU; BR; CN; EP; HK; ID; IL; IN; KR; MX; MY; NZ; PH; RU; SG; TW; UA; VN

*[20]: These patents are applied to the revised part of ARIB STD-T95 Ver.2.0.

Attachment 2 List of Essential Industrial Property Rights (selection of option 2)

特許出願人 PATENT HOLDER	発明の名称 NAME OF PATENT	出願番号等 REGISTRATION NO./ APPLICATION NO.	備考 （出願国名） REMARKS
QUALCOMM Incorporated *[20]	Concentrator for multiplexing access point to wireless network connections	JP2011-526137	US20090316657; AU; BR; CA; CN; EP; HK; ID; IL; IN; KR; MX; MY; NZ; PH; RU; SG; TW; UA; VN
	Concentrator for multiplexing access point to wireless network connections	JP2011-525785	US20090316604; AU; BR; CA; CN; EP; HK; ID; IL; IN; KR; MX; MY; NZ; PH; RU; SG; TW; UA; VN
	Concentrator for multiplexing access point to wireless network connections	JP2011-526457	US20090316629; AT; AU; BE; BR; CA; CH; CN; DE; DK; EP; ES; FI; FR; GB; GR; HK; HU; ID; IE; IL; IN; IT; KR; MX; MY; NL; NO; NZ; PH; PL; PT; RO; RU; SE; SG; TW; UA; VN
	Access terminal assisted node identifier confusion resolution using a time gap	JP2011-525341	US20090316654; AU; BR; CA; CN; EP; HK; ID; IL; IN; KR; MX; MY; NZ; PH; RU; SG; TW; UA; VN
	Access terminal assisted node identifier confusion resolution	JP2011-525342	US20090316655; AU; BR; CA; CN; EP; ID; IL; IN; KR; MX; MY; NZ; PH; RU; SG; TW; UA; VN
	Techinques for supporting relay operation in wireless communication systems	JP2011-530148	US20100080139; BR; CN; EP; IN; KR; TW
	Techniques for supporting relay operation in wireless communication systems	JP2011-530149	US20100080166; CN; EP; IN; KR; TW
	Cell relay network attachment procedures	JP2011-533385	US20100103857; BR; CN; EP; IN; KR; TW

*[20]: These patents are applied to the revised part of ARIB STD-T95 Ver.2.0.

Attachment 2 List of Essential Industrial Property Rights (selection of option 2)

特許出願人 PATENT HOLDER	発明の名称 NAME OF PATENT	出願番号等 REGISTRATION NO./ APPLICATION NO.	備考 （出願国名） REMARKS
QUALCOMM Incorporated *[20]	Bearer QoS mapping for cell relays	JP2011-533388	US20100103863; CN; EP; IN; KR; TW
	Header compression for cell relay communications	JP2011-533413	US20100103865; CN; EP; IN; KR; TW
	Transmission of feedback information for multi-carrier operation	WO2010129618*	US20110110246; JP; CN; IN; TW
	Transmission of feedback information in multi-carriers systems and determination of up-link ACK/NACK resources from down-link CCE of the down-link grant	WO2010129619*	US20110116455; JP; AU; CA; CN; ID; IN; TW; VN; ZA
	Switching wireless network selection modes in conjunction with selection of a wireless cell set	JP2011-535628	US20100113020; AE; BR; CA; CN; EP; ID; IN; KR; PH; RU; TW; VN; ZA
	Selection of wireless network in conjunction with selection of a wireless cell set	JP2011-535629	US20100110987; CN; EP; IN; KR; TW
	Maintaining closed subscriber group information for access control	JP2011-543661	US20100161794; BR; CN; EP; IN; KR; TW
	A technique for compressing a header field in a data packet	JP4159287	US6,680,955; JP; AU; BE; BR; CA; CN; DE; EP; ES; FI; FR; GB; IE; IN; IT; KR; MX; NL; RU; SE
	Radio link failure reporting	JP2011-536569	US20100124173; AU; BR; CA; CN; EP; ID; IN; KR; RU; TW; ZA

*[20]: These patents are applied to the revised part of ARIB STD-T95 Ver.2.0.

Attachment 2 List of Essential Industrial Property Rights (selection of option 2)

特許出願人 PATENT HOLDER	発明の名称 NAME OF PATENT	出願番号等 REGISTRATION NO./ APPLICATION NO.	備考 （出願国名） REMARKS
QUALCOMM Incorporated *[20]	Mobility management based on radio link failure reporting	JP2011-536568	US20100124918; BR; CA; CN; EP; ID; IN; KR; RU; TW; ZA
	Access point handover control based on closed subscriber group subscription information	JP2011-543663	US20100157943; CN; EP; IN; KR; TW
	Handover control based on closed subscriber group subscription information	JP2011-543664	US20100157944; CN; EP; IN; KR; TW
	Handover failure messaging schemes	JP2011-545410	US20100173633; CN; EP; IN; KR; TW
	Adaption of handover parameters	JP2011-545411	US20100173626; CN; EP; IN; KR; TW
	Method and apparatus for enabling multiple transmission modes based on multiple search spaces	JP2011-545529	US20100177700; CN; EP; IN; KR; TW
	Method and apparatus for enabling multiple transmission modes in a wireless communication system	JP2011-545531	US20100177810; BR; CN; EP; IN; KR; TW
	CSG membership indication	JP2011-548355	US20100197285; BR; CN; EP; IN; KR; TW
	Access control for access terminals at access points associated with closed subscriber groups	JP2011-548358	US20100197307; CN; EP; IN; KR; TW
	QOS mapping for relay nodes	WO2010118426*	US20100260129; JP; CN; EP; IN; KR; TW

*[20]: These patents are applied to the revised part of ARIB STD-T95 Ver.2.0.

Attachment 2 List of Essential Industrial Property Rights (selection of option 2)

特許出願人 PATENT HOLDER	発明の名称 NAME OF PATENT	出願番号等 REGISTRATION NO./ APPLICATION NO.	備考 （出願国名） REMARKS
QUALCOMM Incorporated *[20]	Header compression for IP relay nodes	WO2010118431*	US20100260098; JP; CN; EP; IN; KR; TW
	Device mobility for split-cell relay networks	WO2010120828*	US20100260097; JP; CN; EP; IN; KR; TW
	Minimizing interference to non-associated users	WO2010135466*	US20100298005; JP; CN; EP; IN; TW
	Minimizing interference to non-associated users	WO2010135471*	US20100297997; JP; CN; EP; IN; TW
	Maintaining controllee information in collaborative sessions	WO2010132820*	US20100312834; JP; CN; EP; IN; TW
	Controlling media and informing controller status in collaborative sessions	WO2010132824*	US20100312841; JP; CN; EP; IN; TW
	Rank and precoding indication for MIMO operation	WO2010124248*	US20110103510; JP; CN; EP; IN; KR; TW
	Rank and precoding indication for MIMO operation	WO2010124252*	US20110110455; JP; CN; EP; IN; KR; TW
	Rank and precoding indication for MIMO operation	WO2010124254*	US20110105137; JP; CN; EP; IN; KR; TW
	Access mode-based access control	WO2010129612*	US20100278147; JP; CN; IN; TW

*[20]: These patents are applied to the revised part of ARIB STD-T95 Ver.2.0.

Attachment 2 List of Essential Industrial Property Rights (selection of option 2)

特許出願人 PATENT HOLDER	発明の名称 NAME OF PATENT	出願番号等 REGISTRATION NO./ APPLICATION NO.	備考 （出願国名） REMARKS
QUALCOMM Incorporated *[20]	Access mode-based access control	WO2010129613*	US20100279687; JP; BR; CN; IN; KR; TW
	Domain selection for mobile-originated message service	WO2011019771*	US20110191430; TW
	Identifying a domain for delivery of message service information	WO2011019772*	US20110188448; TW
	Apparatus and Method for Reducing Message Collision Between Mobile Stations Simultaneously Accessing a Base Station in a CDMA Cellular Communications System	JP3152353	US5,544,196; US6,615,050; US6,985,728; US20060121897; US7,734,260; US7,426,391; AT; AU; BE; BG; BR; CA; CH; CN; DE; DK; EP; ES; FI; FR; GB; GR; HK; HU; IE; IL; IT; KP; KR; MX; NL; PT; RU; SE; SK; ZA
	High data rate CDMA wireless communication system	JP4263749	US5,930,230; US6,535,496; US6,728,230; US6,424,619; JP; AT; AU; BE; BR; CA; CH; CN; DE; DK; EP; ES; FI; FR; GB; GR; HK; IE; IL; IN; IT; KR; LU; MC; MX; NL; PT; SE; SG; TW; ZA
	A subscriber unit and method for use in a wireless communication system	JP4132088	US7,715,461; US20100177744; US6,678,311; US6,621,875; AR; AT; AU; BE; BR; CA; CH; CL; CN; CY; CZ; DE; DK; EP; ES; FI; FR; GB; GR; HK; IE; IL; IT; KR; LU; MC; MX; NL; NO; NZ; PT; RU; SE; SG; VN

*[20]: These patents are applied to the revised part of ARIB STD-T95 Ver.2.0.

Attachment 2 List of Essential Industrial Property Rights (selection of option 2)

特許出願人 PATENT HOLDER	発明の名称 NAME OF PATENT	出願番号等 REGISTRATION NO./ APPLICATION NO.	備考 （出願国名） REMARKS
QUALCOMM Incorporated *[20]	A subscriber unit and method for use in a wireless communication system	JP4130484	US6,549,525; US6,396,804; JP; AU; BE; BR; CA; CH; CL; CN; DE; EP; ES; FI; FR; GB; GR; HK; ID; IE; IL; IN; IT; KR; LU; MC; MX; MY; NL; NO; PT; RU; SE; SG; TW; UA
	Subscriber Unit for a CDMA Wireless Communication System	JP3998716	US5,926,500; AR; AT; AU; BR; CA; CH; CL; CN; DE; DK; EP; ES; FI; FR; GB; GR; HK; IE; IT; KR; NL; PT; SE
	A wireless communication device and method	JP4790879	US6,011,978; JP; AU; BR; CA; CN; DE; EP; ES; FI; FR; GB; HK; IL; IT; KR; MX; NO; RU; SE; SG
	Method for acquiring an alternate communication system	JP4542176	US6,463,298; JP; AM; AR; AU; AZ; BR; BY; CA; EA; IL; IN; KG; KR; KZ; MD; MY; RU; SG; TJ; TM
	Method of and apparatus for encrypting signals for transmission	JP4260896	US6,075,859; US6,385,316; US6,768,797; US7,995,751; US13/206,300; BE; BR; CA; CN; DE; EP; ES; FI; FR; GB; HK; IE; IN; IT; KR; MX; MY; NL; RO; RU; SE; ZA

*[20]: These patents are applied to the revised part of ARIB STD-T95 Ver.2.0.

Attachment 2 List of Essential Industrial Property Rights (selection of option 2)

特許出願人 PATENT HOLDER	発明の名称 NAME OF PATENT	出願番号等 REGISTRATION NO./ APPLICATION NO.	備考 （出願国名） REMARKS
QUALCOMM Incorporated *[20]	A Method of and Apparatus for Paging a Wireless Terminal in a Wireless Telecommunications System	JP3983818	US6,832,094; US20050064880; US8,046,005; US7,983,695; US7,970,420; US7,555,302; US8,068,859; US6,393,295; JP; AR; AT; AU; BE; BR; CA; CH; CL; CN; CY; CZ; DE; DK; EP; ES; FI; FR; GB; GR; HK; HU; ID; IE; IL; IN; IT; KR; LI; LU; MC; MX; MY; NL; NZ; PL; PT; RU; SE; SG; TW; UA; ZA
	Method and apparatus for high rate packet data transmission	JP4339508	US6,574,211; US7,079,550; US7,184,426; US20060280160; US7,848,284; US8,077,655; US8,005,042; US7,848,283; US8,009,625; US20070025267; US7,848,285; US7,499,427; US7,848,282; US7,995,531; US20090310588; US20070025320; JP; AR; AT; AU; BE; BR; CA; CH; CL; CN; CY; CZ; DE; DK; EP; ES; FI; FR; GB; GR; HK; HU; ID; IE; IL; IN; IT; KR; LU; MC; MX; MY; NL; NO; NZ; PL; PT; RO; RU; SE; SG; UA; VN; ZA
	Method and apparatus for coordinating transmission of short messages with hard handoff searches in a wireless communications system	JP4833898	US6,535,563; US7,010,068; US7,664,209; US7,653,157; JP; AU; BR; CA; CN; DE; EP; FI; FR; GB; HK; IL; IT; KR; MX; NO; SE; SG; TW

*[20]: These patents are applied to the revised part of ARIB STD-T95 Ver.2.0.

Attachment 2 List of Essential Industrial Property Rights (selection of option 2)

特許出願人 PATENT HOLDER	発明の名称 NAME OF PATENT	出願番号等 REGISTRATION NO./ APPLICATION NO.	備考 （出願国名） REMARKS
QUALCOMM Incorporated *[20]	Methods and apparatuses for fast power control of signals transmitted on a mulitple access channel	JP4499285	US6,275,478; US7,286,499; US20080102878; JP; CN; DE; EP; FR; GB; HK; KR; TW
	Distributed infrastructure for wireless cata communications	JP4673435	US6,215,779; JP; CN; DE; EP; FR; GB; HK; KR
	Distributed infrastructure for wireless data communications	JP2004-525578	US7,248,572; US7,715,356; US20100220688; JP; AT; BE; BR; CA; CH; CN; DE; DK; EP; ES; FI; FR; GB; GR; ID; IE; IL; IN; IT; KR; MX; NL; NO; PT; RU; SE; SG; UA
	Method for robust handoff in wireless communication system	JP4536926	US6,360,100; US7,233,794; US20070105584; JP; AU; BE; BR; CA; CN; DE; EP; ES; FI; FR; GB; HK; ID; IE; IL; IT; KR; MX; NL; NO; RU; SE; SG; UA
	Reservation multiple access	JP4485687	US6,256,301; CN; EP; HK; KR
	Reservation multiple access	JP4638052	US6,987,982; US7,613,462; US8,014,805; US6,788,937; JP; CN; DE; EP; ES; FI; FR; GB; HK; IT; KR; NL; SE

*[20]: These patents are applied to the revised part of ARIB STD-T95 Ver.2.0.

Attachment 2 List of Essential Industrial Property Rights (selection of option 2)

特許出願人 PATENT HOLDER	発明の名称 NAME OF PATENT	出願番号等 REGISTRATION NO./ APPLICATION NO.	備考 （出願国名） REMARKS
HUAWEI TECHNOLOGIES CO.,LTD. *[21]	Method, Device and System for Implementing Optimized Inter-RAT Handover	JP2012-16345	
	METHOD, SYSTEM AND DEVICE FOR IMPLEMENTING INTERCONNECTION BETWEEN IP DOMAINS	JP2012-5959	
	Method, System and Device for Processing Circuit Switched Services in an Evolved Packet Network	JP2012-6889	
	METHOD AND SYSTEM FOR MEDIA RESOURCE SCHEDULING	JP2011-277483	
	METHOD AND DEVICE FOR PROVIDING SERVICES FOR USER	JP2011-245402	
	A DATA PROCESSING METHOD AND SYSTEM	JP2011-165390	
	RELAY TRANSMISSION METHOD AND NETWORK NODE	JP2011-534997	
	Method and system for allocating communication resources	JP2011-90014	
	METHOD, DEVICE, AND SYSTEM FOR MANAGING UPLINK CARRIER FREQUENCIES	JP2011-546577	
	METHOD FOR SIGNALLING IN A WIRELESS COMMUNICATION SYSTEM	JP2011-542652	
	Method and Apparatus for Binding Redundancy Versions with a System Frame Number and Subframe Numbers	JP2011-527189	

*[21]: These patents are applied to the part defined by ARIB STD-T95 Ver.2.1.

Attachment 2 List of Essential Industrial Property Rights (selection of option 2)

特許出願人 PATENT HOLDER	発明の名称 NAME OF PATENT	出願番号等 REGISTRATION NO./ APPLICATION NO.	備考 （出願国名） REMARKS
HUAWEI TECHNOLOGIES CO.,LTD. *[21]	Method, User Equipment and Server for Multimedia Session Transfer	JP2011-528175	
	System and Method for SR-VCC of IMS Emergency Sessions	JP2011-517742	
	Method and System for Session Controlling	JP2011-517741	
	METHOD AND APPARATUS FOR UPDATING APN SUBSCRIPTION CONFIGURATION	JP2011-546576	
	Tunnel Management Method, Tunnel Management Apparatus, and Communications System	JP2011-517739	
	PAGING METHOD, NETWORK ELEMENT, MANAGEMENT NETWORK ELEMENT AND COMMUNICATION SYSTEM	JP2011-521426	
	Method, Apparatus and System for Paging Processing and Information Displaying	JP2011-534994	
	Access Control Method, Access Control Apparatus and Communication System	JP2011-532484	
	DECISION-MAKING METHOD, DECISION-MAKING SYSTEM, AND POLICY DECISION FUNCTION	JP2010-541686	
	METHOD AND SYSTEM FOR REPORTING USE AMOUNT OF DATA SERVICE, MEDIA PROCESSOR AND MEDIA CONTROLLER	JP2010-542508	
	Method, Device, and System for Controlling User Equipment to Release Uplink Resources	JP2010-541009	

*[21]: These patents are applied to the part defined by ARIB STD-T95 Ver.2.1.

Attachment 2 List of Essential Industrial Property Rights (selection of option 2)

特許出願人 PATENT HOLDER	発明の名称 NAME OF PATENT	出願番号等 REGISTRATION NO./ APPLICATION NO.	備考 （出願国名） REMARKS
HUAWEI TECHNOLOGIES CO.,LTD. *[21]	SIGNAL ENCODING METHOD AND DEVICE, METHOD FOR ENCODING JOINT FEEDBACK SIGNAL	JP2011-550400	
	Method, Apparatus and System for Recommending Media Content	JP2011-515070	
	Method, System and Device for Processing Circuit Switched Services in an Evolved Packet Network	JP2010-542499	
	POLICY AND CHARGING RULES FUNCTION MANAGEMENT METHOD, MANAGEMENT NETWORK ELEMENT, AND NETWORK SYSTEM	JP2010-530265	
	METHOD AND DEVICE OF NETWORK RESOURCE RELEASE PROCESSING	JP2010-533424	
	METHOD AND DEVICE FOR HOLDING CALLS	JP2010-536314	
	Method for controlling charging of packet data service	JP2010-091482	
	System and method for providing RBT in communication network	JP2010-003407	
	Method and Apparatus for Accessing Old Network through Temporary ID of Evolved Network	JP2010-521290	
	COMMUNICATION SYSTEM, MOBILITY MANAGEMENT NETWORK ELEMENT, METHOD FOR PROCESSING RESOURCE	JP2010-535203	
	Method and Device for Obtaining Media Description Information of IPTV Services	JP2010-530255	

*[21]: These patents are applied to the part defined by ARIB STD-T95 Ver.2.1.

Attachment 2 List of Essential Industrial Property Rights (selection of option 2)

特許出願人 PATENT HOLDER	発明の名称 NAME OF PATENT	出願番号等 REGISTRATION NO./ APPLICATION NO.	備考 （出願国名） REMARKS
HUAWEI TECHNOLOGIES CO.,LTD. *[21]	METHOD, SYSTEM, AND APPARATUS FOR PREVENTING BIDDING DOWN ATTACKS DURING MOTION OF USER EQUIPMENT	JP2010-520411	
	Policy Decision Function Addressing Method, Network Element and Network System	JP2010-526137	
	Method, Device and System for Implementing Optimized Inter-RAT Handover	JP2010-512499	
	METHOD, APPARATUS AND MOBILE COMMUNICATION SYSTEM OF DETERMINING A SET OF ZERO CORRELATION ZONE LENGTHS	JP2010-504427	
	METHOD AND APPARATUS FOR IDENTIFYING USER EQUIPMENT, AND METHOD FOR TRANSMITTING AND ALLOCATING A TEMPORARY IDENTIFIER	JP2010-517260	
	BEARER SUSPENSION METHOD, BEARER RESUMPTION METHOD, AND GATEWAY AGENT	JP2010-516358	
	METHOD, DEVICE AND SYSTEM FOR MULTICAST SERVICE AUTHORIZATION CONTROL	JP2010-509662	
	CONTROL METHOD, SYSTEM AND FUNCTION ENTITY FOR REPORTING BEARER EVENT OF SIGNALING IP FLOW	JP2009-553894	
	METHOD, APPARATUS AND SYSTEM FOR CONTROLLING MULTICAST BEARER RESOURCES	JP2010-500058	

*[21]: These patents are applied to the part defined by ARIB STD-T95 Ver.2.1.

Attachment 2 List of Essential Industrial Property Rights (selection of option 2)

特許出願人 PATENT HOLDER	発明の名称 NAME OF PATENT	出願番号等 REGISTRATION NO./ APPLICATION NO.	備考 （出願国名） REMARKS
HUAWEI TECHNOLOGIES CO.,LTD. *[21]	TIME-SHIFT TV SERVICE ESTABLISHMENT METHOD AND TIME-SHIFT TV MEDIA FUNCTION ENTITY	JP2009-550196	
	Method and Network Device for Creating and Deleting Resources	JP2009-551096	
	METHOD AND SYSTEM FOR IDLE MODE SIGNALING REDUCTION	JP2010-512500	
	MEDIUM RESOURCE RESERVATION METHOD, SERVICE PACKAGE INFORMATION OBTAINING METHOD AND APPARATUS	JP2010-534353	
	METHOD, SYSTEM, TERMINAL, ACCESS NODE AND GATEWAY FOR HANDING OVER TERMINAL TO MACROCELL	JP2009-545801	
	METHOD, SYSTEM AND DEVICE FOR NEGOTIATING SECURITY CAPABILITY WHEN TERMINAL MOVES	JP2010-513633	
	METHOD, DEVICE AND SYSTEM FOR ASSIGNING ACK CHANNELS TO USERS	JP2010-509668	
	Method and System for Implementing Multimedia Ring Back Tone Service and Multimedia Caller Identification Service	JP2009-552993	
	Method and Apparatus for Allocating and Processing Sequences in Communication System	JP2009-546637	
	A MEDIA GATEWAY AND METHOD FOR REPORTING THE TERMINAL STATISTIC PARAMETER VALUE	JP2008-547830	

*[21]: These patents are applied to the part defined by ARIB STD-T95 Ver.2.1.

Attachment 2 List of Essential Industrial Property Rights (selection of option 2)

特許出願人 PATENT HOLDER	発明の名称 NAME OF PATENT	出願番号等 REGISTRATION NO./ APPLICATION NO.	備考 （出願国名） REMARKS
HUAWEI TECHNOLOGIES CO.,LTD. *[21]	METHOD AND DEVICE FOR IDENTIFYING AND OBTAINING AUTHORITY INFORMATION IN SDP PROTOCOL	JP2010-534347	
	SERVICE PROCESSING METHOD AND SYSTEM, AND POLICY CONTROL AND CHARGING RULES FUNCTION	JP2009-546630	
	A interactive method of reporting the location report by target ue in the location service	JP2006-508100	
	CALLING METHODS AND SYSTEMS FOR VIDEO PHONE	JP2009-549763	
	Multimedia Session Call Control Method and Application Server	JP2010-531404	
	ENCODING METHOD AND APPARATUS FOR FRAME SYNCHRONIZATION SIGNAL	JP2009-552052	
	Method and Apparatus for Feeding Back and Receiving Acknowledgement Information of Semi-Persistent Scheduling Data Packets	JP2010-536315	
	SYSTEM, METHOD, AND APPARATUS FOR IMPLEMENTING MULTIMEDIA CALL CONTINUITY	JP2009-537470	
	CALL CONTROL METHOD, CIRCUIT-SWITCHED DOMAIN ADAPTER	JP2009-551095	
	METHOD, APPARATUS AND SYSTEM FOR CONTROLLING WORKING MODE OF HSDPA SYSTEM	JP2010-532417	

*[21]: These patents are applied to the part defined by ARIB STD-T95 Ver.2.1.

Attachment 2 List of Essential Industrial Property Rights (selection of option 2)

特許出願人 PATENT HOLDER	発明の名称 NAME OF PATENT	出願番号等 REGISTRATION NO./ APPLICATION NO.	備考 （出願国名） REMARKS
HUAWEI TECHNOLOGIES CO.,LTD. *[21]	METHOD AND APPARATUS FOR SEQUENCE DISTRIBUTING AND SEQUENCE PROCESSING IN COMMUNICATION SYSTEM	JP2009-529504	
	SECURITY CAPABILITY NEGOTIATION METHOD, SYSTEM, AND EQUIPMENT	JP2009-553896	
	A DATA PROCESSING METHOD AND SYSTEM	JP2009-524069	
	Method and Apparatus for Updating Serving Cell	JP2009-524870	
	Method, System and Device for Accessing Network	JP2009-519782	
	METHOD FOR REDUCING FEEDBACK INFORMATION OVERHEAD N PRECODED MIMO-OFDM SYSTEMS	JP2009-515687	
	METHOD AND APPARATUS OF ESTABLISHING A SYNCHRONISATION SIGNAL IN A COMMUNICATION SYSTEM	JP2009-547518	
	METHOD, SYSTEM AND APPARATUS OF CHARGING FOR GROUP MODE SERVICE	JP2009-505705	
	METHOD AND SYSTEM FOR MEDIA RESOURCE SCHEDULING	JP2008-554581	
	Streaming Media Network System, Streaming Media Service Realization Method and Streaming Media Service Enabler	JP2008-554582	

*[21]: These patents are applied to the part defined by ARIB STD-T95 Ver.2.1.

Attachment 2 List of Essential Industrial Property Rights (selection of option 2)

特許出願人 PATENT HOLDER	発明の名称 NAME OF PATENT	出願番号等 REGISTRATION NO./ APPLICATION NO.	備考 （出願国名） REMARKS
HUAWEI TECHNOLOGIES CO.,LTD. *[21]	System, Method and Apparatus for Establishing Interactive Media Session Based on IP Multimedia Subsystem	JP2008-554583	
	Method for Improving Synchronization and Information Transmission in a Communication System	JP2008-550603	
	Method and System for Synchronization in Communication System	JP2008-550604	
	METHOD, DEVICE AND SYSTEM FOR DATA RETRANSMISSION	JP2008-542582	
	Method for Activating Multimedia Broadcast/Multicast Service	JP2007-521776	
	Method, Devices and System for Implementing a Time-shift Television	JP2008-534853	
	Method of handling periodic location information request	JP2006-540137	
	RESOURCE ADMISSION CONTROL PROCESSING METHOD AND RESOURCE ADMISSION CONTROL PROCESSOR	JP2006-237314	
	A method of implementing multicasting service	JP2006-537040	
	Method for multimedia broadcast/multicast service registration	JP2006-548078	

*[21]: These patents are applied to the part defined by ARIB STD-T95 Ver.2.1.

Attachment 2 List of Essential Industrial Property Rights (selection of option 2)

特許出願人 PATENT HOLDER	発明の名称 NAME OF PATENT	出願番号等 REGISTRATION NO./ APPLICATION NO.	備考 （出願国名） REMARKS
HUAWEI TECHNOLOGIES CO.,LTD. *[21]	Method for information transmission	JP2007-545822	
	RESOURCE REVOKING METHOD BASED ON RACS, AND NETWORK DEVICE	JP2006-238214	
	A METHOD FOR PROCESSING LOCATION REQUEST OF CHANGE OF AREA EVENT	JP2006-515637	
	Method ,system and device for implementing interconnection between IP domains	JP2007-530574	
	A fast interactive method of user terminal in the wireless local area network selecting access mobile network	JP2006-529561	
	Method for controlling charging of packet data service	JP2007-503178	
	A METHOD OF USER ACCESS AUTHORIZATION IN THE WLAN	JP2006-508099	
	method for activating multimedia broadcast/multicast service	JP2007-505357	
	A method for processing requests for location	JP2006-549838	
	Method for releasing a service tunnel in a wireless local area network	JP2006-548074	

*[21]: These patents are applied to the part defined by ARIB STD-T95 Ver.2.1.

Attachment 2 List of Essential Industrial Property Rights (selection of option 2)

特許出願人 PATENT HOLDER	発明の名称 NAME OF PATENT	出願番号等 REGISTRATION NO./ APPLICATION NO.	備考 （出願国名） REMARKS
HUAWEI TECHNOLOGIES CO.,LTD. *[21]	Method and apparatus for controlling power of uplink physical channel	JP2007-216412	
	An optimized interworking method for a wlan user terminal selecting a mobile network to access	JP2006-521374	
	Interactive processing method for network selection information of user terminal in wireless local area network	JP2006-517939	
	System and method for providing RBT in communication network	JP2006-529557	
	Method and apparatus for coding of e-dch dedicated physical control channel	JP2007-531571	
	Method for implementing data segmentation and concatenation and reassembly and transmitter thereof	JP2007-543684	
	Method for processing the re-authentication based on the charging of the packet data flow	JP2007-524161	
	Method, device and system for terminating a user session in a multicast service	JP2006-178630	
	Method and apparatus for service identifying and routing in multimedia broadcast/multicast service system	JP2007-528567	

*[21]: These patents are applied to the part defined by ARIB STD-T95 Ver.2.1.

Attachment 2 List of Essential Industrial Property Rights (selection of option 2)

特許出願人 PATENT HOLDER	発明の名称 NAME OF PATENT	出願番号等 REGISTRATION NO./ APPLICATION NO.	備考 （出願国名） REMARKS
HUAWEI TECHNOLOGIES CO.,LTD. *[21]	Enhanced charging rule for packet data service data service and operation method thereof	JP2007-502176	
	Method for wireless network re-selection in a plurality of networks environment	JP2006-549835	
	Method of obtaining the user identification for the network application entity	JP2006-548082	
	A processing method based on charging trigger event and re-authentication event of packet data flow	JP2007-501099	
	A METHOD OF LIMITING QUANTITY OF FLOW OF LOCATION INFORMATION REQUEST IN LOCATION SERVICE	JP2006-504209	
	COLLECTION APPARATUS OF DATA SERVICE BILLING INFORMATION AND BILLING METHOD	JP2006-537037	
	Method of informing a network of change of user equipment capability	JP2007-515766	
	Method and system for allocating communication resources	JP2008-516102	
	Method for verifying the validity of a user	JP2006-538634	
	Method and system for WLAN user equipment accessing new operation network	JP2006-549836	

*[21]: These patents are applied to the part defined by ARIB STD-T95 Ver.2.1.

Attachment 2 List of Essential Industrial Property Rights (selection of option 2)

特許出願人 PATENT HOLDER	発明の名称 NAME OF PATENT	出願番号等 REGISTRATION NO./ APPLICATION NO.	備考 （出願国名） REMARKS
HUAWEI TECHNOLOGIES CO.,LTD. *[21]	METHOD, SYSTEM AND DEVICE FOR DISTRIBUTING RESOURCE OF BASE STATION NODE	JP2008-550615	
	METHOD AND DEVICE FOR PROVIDING SERVICES FOR USER	JP2010-542504	
	Method for processing network selection information of user terminal in wireless local area network	JP2006-517940	
	SYSTEM AND METHOD FOR MANAGING USER EQUIPMENT TO ACCESS NETWORKS BY USING GENERIC ,AUTHENTICATION ARCHITECTURE	JP2007-509860	
	service transmission method for multimedia broadcast/multicast service	JP2007-525151	
	METHOD FOR PROCESSING LOCATION INFORMATION REQUEST IN LICATION SERVICE	JP2006-517938	
	METHOD OF INTER-FREQUENCY/SYSTEM MEASUREMENT AND METHOD OF DETERMINING MEASUREMENT PERFORMANCE REQUIREMENT THEREOF	JP2008-508057	
	A method for reducing interface load of home subscriber server	JP2006-548075	
	A method for notifying changes of cell information in multimedia broadcast/multicast service	JP2007-509861	

*[21]: These patents are applied to the part defined by ARIB STD-T95 Ver.2.1.

Attachment 2 List of Essential Industrial Property Rights (selection of option 2)

特許出願人 PATENT HOLDER	発明の名称 NAME OF PATENT	出願番号等 REGISTRATION NO./ APPLICATION NO.	備考 （出願国名） REMARKS
HUAWEI TECHNOLOGIES CO.,LTD. *[21]	Method of counting the number of multimedia broadcasting multicast service subscribers	JP2007-507646	
	A method, a system and a terminal for realizing presenting information interaction of the wireless lan users	JP2004-549031	
	A Process Method about A Process Method about the Service Connection between the Wireless Local Area Network and User Terminal	JP2004-557750	
	WLAN SERVICE SYSTEM AND METHOD FOR CHARGING BASED ON USER DATA FLOW	JP2004-557747	
	Method for generation of training sequence in channel estimation	JP2002-511499	
	A method for processing create packet data protocol context request	JP2006-523507	
	Method for processing a location service	JP2006-548079	

*[21]: These patents are applied to the part defined by ARIB STD-T95 Ver.2.1.

Approved by the 86th Standard Assembly
(selection of option 2)

Attachment 2 List of Essential Industrial Property Rights
[Ver. 2.2]

特許出願人 PATENT HOLDER	発明の名称 NAME OF PATENT	出願番号等 REGISTRATION NO./ APPLICATION NO.	備考 （出願国名） REMARKS
QUALCOMM Incorporated	A comprehensive confirmation form has been submitted with regard to ARIB STD-T95.		

Attachment 2 List of Essential Industrial Property Rights (selection of option 2)
[Ver. 2.1]

特許出願人 PATENT HOLDER	発明の名称 NAME OF PATENT	出願番号等 REGISTRATION NO./ APPLICATION NO.	備考 （出願国名） REMARKS
QUALCOMM Incorporated	A method and an apparatus for a quick retransmission of signals in a communication system	JP2003-533078	AU; BE; BR; CA; CN; DE; EP; ES; FI; FR; GB; HK; ID; IE; IL; IN; IT; JP; KR; MX; NL; NO; RU; SE; SG; TW; UA; US6,694,469; US7,127,654; US7,613,978; US20100046497
	Method, user agent, application gateway and program for soft handoff across different networks assisted by an end-to-end application protocol	JP2011-125033	AU; BR; CA; CN; EP; HK; ID; IL; IN; JP; KR; MX; RU; TW; UA; US8,037,188; US20110317667
	Adaptive pilot insertion for a MIMO-OFDM system	JP4690401	CA; CN; DE; EP; ES; FR; GB; HK; IN; IT; KR; MY; TW; US8,000,221; US20100067590
	Initial pilot frequency selection	JP4950068	CL; CN; DE; EP; ES; FR; GB; HK; IN; IT; KR; TW; US8,009,551
	Semi-connected operations for wireless communications	JP2010-541330	BR; CA; CN; DE; EP; ES; FR; GB; IN; IT; JP; KR; RU; SG; TW; US20090082072
	Mobile access in a diverse access point network	JP2010-541487	AU; BR; CA; CN; EP; HK; ID; IL; IN; KR; MX; MY; NZ; PH; RU; SG; TW; UA; VN; US20090088131
	Access point configuration based on received access point signals	JP2011-504328	AU; BR; CA; CN; EP; HK; ID; IL; IN; KR; MX; MY; NZ; PH; RU; SG; TW; UA; VN; US20090122773
	Bundling of ACK information in a wireless communication system	JP2011-520394	AT; AU; BE; BR; CA; CH; CN; DE; DK; EP; ES; FI; FR; GB; GR; HK; HU; ID; IE; IL; IN; IT; KR; MX; MY; NL; NO; NZ; PL; PT; RO; RU; SE; SG; TW; UA; VN; US20090279460
	A method for initiating in a terminal of a cellular network the measurement of power levels of signals and a terminal	JP4933099	AT; BR; CA; CH; CN; DE; EP; ES; FI; FR; GB; IT; KR; NL; SE; US7,096,021

Attachment 2 List of Essential Industrial Property Rights (selection of option 2)

[Ver. 2.1]

特許出願人 PATENT HOLDER	発明の名称 NAME OF PATENT	出願番号等 REGISTRATION NO./ APPLICATION NO.	備考 （出願国名） REMARKS
QUALCOMM Incorporated	Positioning reference signals in a telecommunication system	JP2012-517912	CN; EP; IN; KR; TW; US20110158200
	Method and apparatus for communicating antenna port assignments	JP2012-519589	CN; EP; IN; KR; TW; US20110158351
	Extension of UE-RS to DWPTS	JP2012-523740	AE; AU; BR; CA; CN; EP; ID; IN; KR; RU; TW; VN; ZA; US20110205954
	Method and apparatus for supporting single-user multiple-input multiple-output (SU-MIMO) and multi-user mimo (MU-MIMO)	JP2012-524885	BR; CN; EP; IN; KR; TW; US20110194504
	MIMO related signaling in wireless communication	JP2012-525646	BR; CN; EP; IN; KR; TW; US20110188587
	Method and apparatus for determining time for GPS receivers	JP2001-505665	BE; CH; DE; DK; EP; ES; FI; FR; GB; GR; HK; IE; IT; JP; KR; LI; NL; PT; SE; US5,945,944; US6,150,980; US6,433,734
	Method and apparatus for cell search in an orthogonal wireless communication system	JP2010-508788	AU; BR; CA; CN; EP; HK; ID; IL; IN; JP; KR; MX; MY; NO; NZ; PH; RU; SG; TW; UA; VN; US20100103906
	Reference signal design for cell search in an orthogonal wireless communication system	JP2010-508789	AU; BR; CA; CN; EP; HK; ID; IL; IN; KR; MX; MY; NO; NZ; PH; RU; SG; TW; UA; VN; US20100035611
	Cyclic delay diversity and precoding for wireless communication	JP2010-519794	AU; BR; CA; CN; EP; HK; ID; IL; IN; KR; MX; MY; NZ; PH; RU; SG; TW; UA; VN; US20080247364
	Apparatus and method for MIMO transmission with explicit and implicit cyclic delays	JP2010-518757	AU; BR; CA; CN; EP; HK; ID; IL; IN; KR; MX; MY; NZ; PH; RU; SG; TW; UA; VN; US20090197546
	Transmitter Power Control System	JP2935896	AT; AU; BG; BR; CA; CH; DE; DK; EP; ES; FI; FR; GB; GR; HK; HU; IE; IL; IT; KR; LU; MC; MX; NL; RO; SE; TW; ZA; US5,485,486

Approved by the 88th Standard Assembly
(selection of option 2)

Attachment 2 List of Essential Industrial Property Rights
[Ver. 3.0]

特許出願人 PATENT HOLDER	発明の名称 NAME OF PATENT	出願番号等 REGISTRATION NO./ APPLICATION NO.	備考 （出願国名） REMARKS
QUALCOMM Incorporated	A comprehensive confirmation form has been submitted with regard to ARIB STD-T95.		

Attachment 2 List of Essential Industrial Property Rights (selection of option 2)

[Ver. 2.2]

特許出願人 PATENT HOLDER	発明の名称 NAME OF PATENT	出願番号等 REGISTRATION NO./ APPLICATION NO.	備考 （出願国名） REMARKS
QUALCOMM Incorporated	Enhanced frequency division multiple access for wireless communication	JP2008-541671	US20110216704;US8,077,692;JP;EP;BE;BG;CL;CZ;DE;ES;FI;FR;GB;HK;HU;IE;IN;IT;KR;MY;NL;PL;RO;TW
	Reverse link power control for an OFDMA system	JP2009-506654	US20100027451;US20100034315;US7,965,789;JP;EP;AR;AT;BE;CH;CN;DE;DK;ES;FI;FR;GB;GR;HU;IE;IN;IT;KR;NL;PL;PT;RO;SE;TH;TW
	A broadcast channel for E-UTRA	JP5215291	US20080072269;JP;EP;AR;BR;CA;CN;HK;IN;KR;RU;TW
	Method and apparatus for fragmenting a control message in a wireless communication system	JP5096495	US8,000,326;EP;CN;IN;KR;TW
	Method and apparatus for data symbol and control symbol multiplexing	JP4903872	US20130136112;US8,363,606;NO;EP;BR;CN;HK;ID;IL;IN;KR;MX;NZ;PH;RU;UA;VN
	Dynamic channel quality reporting in a wireless communication system	JP5021748	US8,068,427;JP;EP;BR;CA;CN;IN;KR;RU;TW
	Method and apparatus for processing primary and secondary synchronization signals for wireless communication	JP5038427	US13/900,727;US20100182979;EP;BR;CA;CN;DE;ES;FR;GB;IN;IT;KR;RU;TW
	Uplink ACK transmission for SDMA in a wireless communication system	JP4995916	US8,300,582;EP;BR;CA;CN;HK;IN;KR;RU;SG;TW
	Method and apparatus for utilizing other sector interference (OSI) indication	JP2010-516113	US13/853,283;US8,433,357;EP;BR;CA;CN;DE;ES;FR;GB;HK;IN;IT;KR;NL;RU;SG;TW
	Scheduling of dynamic broadcast channel	JP2010-521895	US13/889,095;US8,457,093;EP;AU;BR;CA;CN;HK;ID;IL;IN;KR;MX;MY;NZ;PH;RU;SG;TW;UA;VN
	Configurable acknowledgement processing in a wireless communication system	JP2010-524282	US20080253318;EP;BR;CA;CN;IN;KR;RU;TW
	Pilot transmission by relay stations in a multihop relay communication system	JP2010-521928	US20080227386;EP;BR;CA;CN;IN;KR;RU;TW

Attachment 2 List of Essential Industrial Property Rights (selection of option 2)

[Ver. 2.2]

特許出願人 PATENT HOLDER	発明の名称 NAME OF PATENT	出願番号等 REGISTRATION NO./ APPLICATION NO.	備考 （出願国名） REMARKS
QUALCOMM Incorporated	Backhaul communication for interference management	JP2010-522516	US20080233967;EP;BR;CA;CN;IN;KR;RU;TW
	Method and apparatus for efficient support for multiple authentications	JP5144751	US8,145,905;EP;BR;CA;CN;IN;KR;RU;TW
	Self-configuration for femtocells	JP2011-514566	US8,467,304;EP;BR;CN;ID;IL;IN;KR;MX;MY;NZ;PH;RU;SG;TW;VN
	Fast carrier allocation in multi-carrier systems	JP2011-517895	US20090257387;JP;EP;AU;BR;CA;CN;HK;ID;IL;IN;KR;MX;MY;NZ;PH;RU;SG;TW;UA;VN
	Interference reduction between OFDM carriers by carrier spacing optimization	JP5204302	US20090304100;EP;BR;CA;CN;IN;KR;RU;SG;TW
	Interference mitigation by transmitting on a second, lower, power level	JP2011-526468	US20090325626;JP;EP;AU;BR;CA;CN;HK;ID;IL;IN;KR;MX;MY;NZ;PH;RU;SG;TW;UA;VN
	Method and apparatus for downlink data arrival	JP2011-521540	US20090274077;EP;CN;IN;KR;TW
	Management of UE operation in a multi-carrier communication system	JP2011-525782	US8,184,599;JP;EP;AU;BR;CA;CN;HK;ID;IL;IN;KR;MX;MY;NZ;PH;RU;SG;TW;UA;VN
	Synchronous TDM-based communication in dominant interference scenarios	JP2011-527876	US13/888,292;US13/888,320;US20100008282;NO;JP;EP;AT;AU;BE;BR;CA;CH;CN;DE;DK;ES;FI;FR;GB;GR;HK;HU;ID;IE;IL;IN;IT;KR;MX;MY;NL;NZ;PH;PL;PT;RO;RU;SE;SG;TW;UA;VN
	Wireless communication channel blanking	JP2012-544484	US20110151790;EP;CN;IN;KR;TW
	Relay architecture framework	JP2012-501155	US20100046418;EP;BR;CA;CN;IN;KR;RU;SG;TW
	Supporting multiple access technologies in a wireless environment	JP2012-501603	US20130094462;US8,325,661;JP;EP;AU;BR;CA;CN;HK;ID;IL;IN;KR;MX;MY;PH;RU;SG;TW;UA;VN
	Channel quality feedback in multicarrier systems	JP2012-508543	US20100118817;EP;BR;CA;CN;HK;ID;IN;KR;MY;RU;TW;ZA

Attachment 2 List of Essential Industrial Property Rights (selection of option 2)

[Ver. 2.2]

特許出願人 PATENT HOLDER	発明の名称 NAME OF PATENT	出願番号等 REGISTRATION NO./ APPLICATION NO.	備考 （出願国名） REMARKS
QUALCOMM Incorporated	Apparatus and method for establishing a data connection between a remote station and a wireless network	JP2012-509026	US8,457,599;EP;BR;CN;IN;KR;TW
	DGNSS correction for positioning	JP2012-509463	US8,259,008;EP;CN;IN;KR;TW
	Method and apparatus for synchronization during a handover failure in a wireless communication system	JP2012-514428	US20100165835;EP;CN;IN;KR;TW
	Position location using multiple carriers	JP2012-521181	US20100240396;EP;CN;IN;KR
	Apparatus and method for dual-cell high-speed uplink packet access	JP2012-521178	US8,416,706;EP;CN;IN;KR;TW
	Error-correcting multi-stage code generator and decoder for communication systems having single transmitters or multiple transmitters	JP4773356	US20090158114;US7,139,960;US7,451,377;JP;EP;CN;DE;FR;GB;HK;IN;KR
	Control information signaling	JP2013-506383	US8,433,251;EP;BR;CN;IN;KR;TW
	Dynamic selection of subframe formats in a wireless network	JP2012-528547	US20100303013;EP;BR;CA;CN;HK;ID;IN;KR;PH;RU;TW;UA;ZA
	Hybrid automatic repeat request operation and decoding status signaling for uplink multiple-input multiple-output	JP2013-501419	US20110026622;EP;CN;IN;KR;TW
	Adaptive transmissions in coordinated multiple point communications	JP2013-501409	US20110026421;EP;BR;CN;IN;KR;TW
	Method and apparatus for physical uplink control channel (PUCCH) resource mapping with transmit diversity	JP2013-501418	US20110026631;EP;BR;CN;IN;KR;TW
	Methods and apparatus for subframe interlacing in heterogeneous networks	JP2013-504984	US20110188481;EP;BR;CA;CN;HK;ID;IL;IN;KR;PH;RU;TH;TW;VN;ZA
	Method and apparatus for conducting measurements when multiple carriers are supported	JP2013-507074	US20110242999;EP;BR;CN;IN;KR;TW
	MBSFN subframe generation and processing for unicast	JP2013-507834	US20110103286;EP;CN;IN;KR;TW
	Downlink control information for efficient decoding	JP2013-507843	US20130128838;US8,379,536;EP;CN;IN;KR;TW
	Method and apparatus for using channel state information reference signal in wireless communication system	JP2013-507846	US20110244877;EP;BR;CN;IN;KR;TW

Attachment 2 List of Essential Industrial Property Rights (selection of option 2)

[Ver. 2.2]

特許出願人 PATENT HOLDER	発明の名称 NAME OF PATENT	出願番号等 REGISTRATION NO./ APPLICATION NO.	備考 （出願国名） REMARKS
QUALCOMM Incorporated	Uplink resource allocation for LTE advanced	JP2013-507840	US20110085513;EP;CN;IN;KR;TW
	Method and apparatus for reference signal resource allocation	JP2013-509042	US20110249767;EP;CN;IN;KR
	Improved downlink association set for uplink ACK/NACK in time division duplex system	JP2013-509035	US20110255484;EP;CN;IN;KR;TW
	Method and apparatus for uplink multi-carrier power amplifier/antenna operation and channel prioritization	JP2013-509098	US20110092219;EP;BR;CN;IN;KR;TW
	TDM-FDM relay backhaul channel for LTE advanced	JP2013-509848	US20110103296;EP;CN;IN;KR;TW
	Apparatus and method for providing relay backhaul communications in a wireless communication system	JP2013-509834	US20110103295;EP;CN;IN;KR;TW
	Apparatus and method for joint encoding of user specific reference signal information in wireless communication	JP2013-509847	US20110268050;EP;CN;IN;KR;TW
	Restricting access point transmissions	JP2013-510518	US20110275361;EP;CN;IN;KR;TW
	Sounding reference signal enhancements for wireless communication	JP2012-542195	US20110294529;EP;BR;CN;IN;KR;TW
	Apparatus and method for transmit-response timing for relay operation in wireless communications	JP2012-544926	US20110149774;EP;CN;IN;KR;TW
	Cross-carrier signaling in a multi-carrier system	JP2012-547177	US20120009923;EP;AE;BR;CA;CN;HK;ID;IN;KR;PH;RU;TH;TW;VN;ZA
	Interaction between accumulative power control and minimum/maximum transmit power in LTE systems	JP2012-547172	US20110159914;EP;BR;CN;IN;KR;TW
	Multiplexing demodulation reference signals in wireless communications	JP2012-549012	US20120014318;EP;AE;BR;CA;CN;HK;ID;IN;KR;MY;PH;RU;TW;ZA
	Channel feedback based on reference signal	JP2012-549141	US20120020230;EP;BR;CA;CN;ID;IN;KR;MY;PH;RU;TW;ZA
	Method and apparatus for power scaling for mutli-carrier wireless terminals	JP2012-550147	US20120020286;EP;CN;IN;KR;TW
	Aperiodic sounding reference signal transmission method and apparatus	JP2012-553004	US20110199944;EP;BR;CN;IN;KR;TW

Attachment 2 List of Essential Industrial Property Rights (selection of option 2)

[Ver. 2.2]

特許出願人 PATENT HOLDER	発明の名称 NAME OF PATENT	出願番号等 REGISTRATION NO./ APPLICATION NO.	備考 （出願国名） REMARKS
QUALCOMM Incorporated	Methods and systems for uplink transmit diversity	JP2012-554041	US20120044881;EP;CN;IN;KR;TW
	Resource block mapping for cross-carrier assignments	JP2012-554068	US20120045014;EP;CN;IN;KR;TW
	Channel state information reference signals	JP2012-555120	US20120058791;EP;BR;CA;CN;ID;IN;KR;MY;PH;RU;SG;TW;VN;ZA
	Method and apparatus for channel quality indicator (CQI) enhancements	JP2012-556245	US20110216682;EP;BR;CN;IN;KR
	Methods of resolving PDCCH payload size ambiguity in LTE	JP2013-500195	US20110228732;EP;CN;IN;KR;TW
	Random access design in a multiple component carrier communication network	JP2013-500220	US20120063302;EP;BR;CN;IN;KR;TW
	User-specific search space design for multi-carrier operation	JP2013-500204	US20110228724;EP;CN;IN;KR;TW
	Data radio bearer mapping in a telecommunication network with relays	JP2013-501526	US20110235514;EP;CN;IN;KR;TW
	Feedback of control information for multiple carriers	JP2013-503860	US20110243012;EP;CN;IN;KR;TW
	Aperiodic channel state information request in wireless communication	JP2013-503855	US20120076017;EP;BR;CN;IN;KR
	Power headroom reporting	JP2013-503859	US20120082041;EP;BR;CN;IN;KR;TW
	Method and apparatus for signaling user equipment capabilities	JP2013-503857	US20110243083;EP;CN;IN;KR
	Methods and apparatuses for radio resource management measurements of a user equipment in a heterogeneous network	JP2013-505116	US13/851,815;US20120088516;EP;AE;BR;CA;CN;IL;IN;KR;MX;PH;RU;TH;UA;ZA
	CQI estimation in a wireless communication network	JP2013-505086	US20110250919;EP;AE;AU;BR;CA;CN;HK;IN;KR;MY;RU;TH;TW;ZA
	Channel state information reporting in a wireless communication network	JP2013-505089	US20110249643;EP;AE;BR;CA;CN;HK;ID;IN;KR;MY;PH;RU;TH;ZA

Attachment 2 List of Essential Industrial Property Rights (selection of option 2)

[Ver. 2.2]

特許出願人 PATENT HOLDER	発明の名称 NAME OF PATENT	出願番号等 REGISTRATION NO./ APPLICATION NO.	備考 （出願国名） REMARKS
QUALCOMM Incorporated	Aperiodic CQI reporting in a wireless communication network	JP2013-505092	US20110249584;EP;AE;BR;CA;CN;HK;IN;KR;MY;PH;RU;VN;ZA
	Radio link monitoring (RLM) and reference signal received power (RSRP) measurement for heterogeneous networks	JP2013-505188	US20110256861;EP;AE;BR;CA;CN;HK;IL;IN;KR;MY;PH;RU;TH;TW;ZA
	Determination of radio link failure with enhanced interference coordination and cancellation	JP2013-505110	US20120087250;EP;AE;AR;BR;CA;CN;ID;IN;KR;MY;PH;RU;TH;TW;ZA
	Resource partitioning information for enhanced interference coordination	JP2013-505112	US13/897,214;US20110275394;EP;AE;BR;CA;CN;ID;IN;KR;PH;RU;TH;UA;VN;ZA
	Adaptive resource negotiation between base stations for enhanced interference coordination	JP2013-505109	US20110249642;EP;CN;IN;KR
	Resource availability for physical downlink shared channel (PDSCH) in relay backhaul transmissions	JP2013-509192	US20110268064;EP;CN;IN;KR
	Methods and systems for SRS power scaling in carrier aggregation	JP2013-509274	US20110275335;EP;CN;IN;KR;TW
	Method and apparatus for control and data multiplexing in wireless communication	JP2013-509185	US20110268080;EP;BR;CN;IN;KR;TW
	Uplink power control in aggregated carrier communication systems	JP2013-510183	US20110275403;EP;BR;CN;IN;KR
	Transmission of control information on uplink channels	JP2013-510187	US20120113832;EP;CN;IN;KR;TW
	Methods and apparatuses for downlink channel resource assignment	JP2013-511242	US20120120882;EP;CN;IN;KR
	System, apparatus and method for control channel configuration in wireless communication systems	JP2013-510311	US20110280201;EP;CN;IN;KR
	Power headroom reporting for multicarrier LTE systems	JP2013-513255	US20110292874;EP;CN;IN;KR
	Methods and apparatuses facilitating synchronization of security configurations	JP2013-515563	US20110312299;EP;AR;AU;BR;CA;CN;IL;IN;KR;MX;MY;PH;RU;SG;TH;TW;UA;VN;ZA
	Method and apparatus for relay node management and authorization	JP2013-515562	US20110314522;EP;AR;CN;IN;KR;TW

Attachment 2 List of Essential Industrial Property Rights (selection of option 2)

[Ver. 2.2]

特許出願人 PATENT HOLDER	発明の名称 NAME OF PATENT	出願番号等 REGISTRATION NO./ APPLICATION NO.	備考 （出願国名） REMARKS
QUALCOMM Incorporated	Rate matching for data and control channels in wireless communication systems	JP2013-516678	US20120155362;EP;CN;IN;KR
	Interaction between maximum power reduction and power scaling in wireless networks	JP2013-518541	US20110319120;EP;CN;IN;KR
	Resource utilization measurements for heterogeneous networks	JP2013-518576	US20110319090;EP;BR;CN;IN;KR
	System, apparatus, and method for utilizing network access parameters in wireless communication systems	JP2013-516805	US20110317661;EP;CN;IN;KR
	Demodulation reference signals (DM-RS) for PHICH or PDCCH based retransmission in LTE-A wireless communication	JP2013-518661	US20110317646;EP;BR;CN;IN;KR
	Apparatus and methods for inter-user equipment transfers	*US20120137008	JP;EP;CN;IN;KR
	Aperiodic channel quality indicator report in carrier aggregation	*US20120039199	JP;EP;BR;CN;IN;KR
	Power control on a deactivated component carrier	*US20120058797	JP;EP;CN;IN;KR
	Channel state information feedback for carrier aggregation	*US20120039252	JP;EP;CN;IN;KR
	Physical uplink control channel resource allocation for multiple component carriers	*US20120039275	JP;EP;BR;CN;IN;KR
	Interleaving for relay physical downlink control channel (R-PDCCH)	*US20120039220	JP;EP;CN;IN;KR
	Search space design for relay physical downlink control channel (R-PDCCH)	*US20120039283	JP;EP;CN;IN;KR
	UE receiver reference signal processing that utilizes resource partitioning information	*US20120057480	JP;EP;CN;IN;KR
	Uplink control channel resource mapping for carrier aggregation	*US20120236771	JP;EP;CN;IN;KR;TW
	Aperiodic SRS for carrier aggregation	*US20120257582	JP;EP;CN;IN;KR
	Power headroom for simultaneous voice and long term evolution	*US20120082046	JP;EP;CN;IN;KR

Attachment 2 List of Essential Industrial Property Rights (selection of option 2)

[Ver. 2.2]

特許出願人 PATENT HOLDER	発明の名称 NAME OF PATENT	出願番号等 REGISTRATION NO./ APPLICATION NO.	備考 （出願国名） REMARKS
QUALCOMM Incorporated	Method and apparatus for PUCCH and PUSCH encoding	*US20120082075	JP;EP;CN;IN;KR
	Control channel resources for multi-bit ACK/NAK	*US20120263121	JP;EP;CN;IN;KR
	Resource assignments for uplink control channel	*WO2012051119	US20120263124;JP;EP;CN;KR;TW
	Restricted resource in a wireless network	*WO2012061030	US20120275322;JP;EP;AE;AU;BR;CA;ID;IN;KR;MY;PH;TH;VN
	CQI-only transmission on the PUSCH	*WO2012064731	US20120113849;JP;EP;IN
	Method and apparatus for improving uplink transmission mode configuration	*WO2012064783	US20120113869;JP
	Improved acknowledgement / negative acknowledgement feedback for TDD	*WO2012064935	US20120287828;JP;EP;IN
	Method and apparatus for improving acknowledgement/negative acknowledgement feedback	*WO2012068141	US20120294204;JP;CN;IN;TW
	Method and apparatus for determining timing information for cells	*WO2012100200	US20120190373
	Uplink transmit antenna selection in carrier aggregation	*WO2012116091	US20120213154
	Devices, methods, and apparatuses for mobile device acquisition assistance	*US13/732,071	US61/678,021
	Method and apparatus for supervising a potentially gated signal in a wireless communication system	JP4773009	US7,054,284;NO;JP;EP;AT;AU;BE;BR;CA;CH;CN;DE;DK;ES;FI;FR;GB;GR;HK;ID;IE;IL;IN;IT;KR;MX;NL;PT;RU;SE;SG;TW;UA
	PN code based addressing methods, computer readable medium and apparatus for airlink communications	JP4955762	US8,134,952;EP;BR;CA;CL;CN;DE;ES;FR;GB;IN;IT;KR;RU;TW
	Method of communicating between an access terminal and a femto node, wireless communication apparatus, and computer program product	JP5108150	US20100040019;EP;AU;BR;CA;CN;HK;ID;IL;IN;KR;MX;MY;NZ;PH;RU;SG;TW;UA;VN
	Method and apparatus to control visited network access for devices	JP2012-557136	US20110217978;EP;CN;IN;KR
	Method and apparatus to control local internet protocol access for devices	JP2012-557137	US20120057574;EP;CN;IN;KR

Attachment 2 List of Essential Industrial Property Rights (selection of option 2)

[Ver. 2.2]

特許出願人 PATENT HOLDER	発明の名称 NAME OF PATENT	出願番号等 REGISTRATION NO./ APPLICATION NO.	備考 （出願国名） REMARKS
QUALCOMM Incorporated	Muting schemes for channel state information reference signal and signaling thereof	JP2013-503926	US20120076106;EP;BR;CN;IN;KR;TW
	Reference signal patterns	JP2013-513333	US20120134273;EP;BR;CN;IN;KR
	ACK/NACK transmission for multi-carrier operation	*US20120039279	JP;EP;BR;CN;IN;KR
	Method and apparatus for performing mobile assisted hard handoff between communication sSystems	JP4234209	US5,940,761;US6,304,755;US6,810,254;EP;AM;AU;AZ;BR;BY;CA;CL;CN;DE;EA;ES;FI;FR;GB;HK;ID;IE;IL;IN;IT;KG;KR;KZ;MD;MX;NL;NZ;RU;SE;SG;TJ;TM;TW;UA;ZA
	Method and apparatus for sequentially synchronized network	JP2003-505977	US6,671,291;JP

*The deadline for filing of a Japan counterpart of this patent application has not yet passed. Therefore a Japanese counterpart may still be filed or granted in Japan.

Approved by the 91st Standard Assembly
(selection of option 2)

Attachment 2 List of Essential Industrial Property Rights
[Ver. 3.0]

特許出願人 PATENT HOLDER	発明の名称 NAME OF PATENT	出願番号等 REGISTRATION NO./ APPLICATION NO.	備考 （出願国名） REMARKS
QUALCOMM Incorporated	Method and system for a multicast service initiation in a communication system	JP4727986	US7,796,631; JP; AT; BE; BR; CH; CN; DE; DK; EP; ES; FI; FR; GB; GR; HK; HU; IE; IT; KR; NL; PT; RO; SE; TW
	Method and system for signaling in broadcast communication system	JP4546475	US7,912,485; US20110170470; JP; AU; BR; CA; CN; EP; HK; ID; IL; IN; KR; MX; RU; TW; UA
	Method and apparatus for providing antenna diversity in a wireless communication system	JP2009-506656	US20070041457; US20120140798; US20120140838; US20120120925; JP; CL; CN; EP; HK; IN; KR; TH; TW
	Acknowledgement of control messages in a wireless communication system	JP5059870	US8,477,684; BR; CA; CN; EP; IN; KR; RU; TW
	Method and apparatus for cell search in an orthogonal wireless communication system	JP2010-508788	US20100103906; JP; AU; BR; CA; CN; EP; HK; ID; IL; IN; KR; MX; MY; NO; NZ; PH; RU; SG; TW; UA; VN
	Cyclic delay diversity and precoding for wireless communication	JP5180233	US20080247364; AU; BR; CA; CN; EP; HK; ID; IL; IN; KR; MX; MY; PH; RU; SG; TW; UA; VN
	User profile, policy, and PMIP key distribution in a wireless communication network	JP4965671	US20080263631; BR; CA; CN; EP; IN; KR; RU; TW
	Methods and apparatus for mobility support and IP multimedia subsytem (IMS) registration in a multimode network environment	JP5329550	US20090103455; AU; BR; CA; CN; EP; HK; ID; IL; IN; KR; MX; MY; PH; RU; SG; TW; UA; VN
	System and method for cell search and selection in a wireless communication system	JP5209789	US8,588,773; US14/056,641; CN; EP; IN; KR
	Support for optional system parameter values	JP2013-501427	US20110182234; CN; EP; IN; KR; TW
	Methods and apparatus for employing different capabilities for different duplexing modes	US20120218922*	JP; CN; EP; IN; KR
	Methods and apparatus for updating the UE capability in an E-UTRAN	WO2013063793*	US13/823,706

*The deadline for filing of a Japan counterpart of this patent application has not yet passed. Therefore a Japanese counterpart may still be filed or granted in Japan.

Approved by the 92th Standard Assembly
(selection of option 2)

Attachment 2 List of Essential Industrial Property Rights
[Ver. 3.2]

特許出願人 PATENT HOLDER	発明の名称 NAME OF PATENT	出願番号等 REGISTRATION NO./ APPLICATION NO.	備考 （出願国名） REMARKS
QUALCOMM Incorporated	A comprehensive confirmation form has been submitted with regard to ARIB STD-T95.		
ソニー株式会社	A comprehensive confirmation form has been submitted with regard to ARIB STD-T95.		

Attachment 2 List of Essential Industrial Property Rights

Approved by the 95th Standard Assembly
(selection of option 2)

[Ver. 3.3]

特許出願人 PATENT HOLDER	発明の名称 NAME OF PATENT	出願番号等 REGISTRATION NO./ APPLICATION NO.	備考 （出願国名） REMARKS
QUALCOMM Incorporated	Method and apparatus for allocating resources in a multiple-input multiple-output (MIMO) communication system	JP4537004	US7,907,972; US7,248,879; US6,662,024; US8,489,107; AU; BR; CA; CN; DE; EP; ES; FR; GB; HK; ID; IL; IN; IT; KR; MX; NL; NO; RU; SG; TW; UA
	Method and apparatus for out-of-band transmission of broadcast service option in a wireless communication system	JP4615828	US6,909,702; BR; CA; CN; DE; EP; FR; GB; KR; MX; TW
	Method and apparatus for broadcast signaling in a wireless communication system	JP4087713	US7,693,508; BR; CN; EP; KR; NO; TW
	Method and apparatus for overhead messaging in a wireless communication system	JP4773042	US7,349,425; JP; AU; BR; CN; DE; EP; GB; ID; IL; IN; KR; MX; NO; RU; SG; TW; UA
	Wireless network optimization through remote device data	JP2005532717	US7,263,351; JP; AR; AU; BR; CL; CN; DE; EP; GB; HK; ID; IL; IN; KR; MX; NZ; PE; RU; SG; VE; VN
	System and method for controlling broadcast multimedia using plural wireless network connections	JP2006523386	US7,925,203; US20110143653; JP; BR; CN; EP; HK; IL; IN; KR; MX
	Methods and apparatus to optimize delivery of multicast content using probabilistic feedback	JP2007-519371	US7,127,655; JP; CN; HK; IN; KR; TW; ZA
	Spatial processing with steering matrices for pseudo-random transmit steering in a multi-antenna	JP5139473	AU; BR; CA; CN; EP; HK; IL; IN; KR; MX; PH; RU; SG; TW; VN
	Methods and Apparatus for Creation and Transport of Multimedia Content Flows	JP4870662	US7,912,457; US8,472,930; JP; AU; BR; CN; DE; EP; ES; FR; GB; HK; IL; IN; IT; KR; MX; NL; PH; RU; VN

Approved by the 95th Standard Assembly
(selection of option 2)

Attachment 2 List of Essential Industrial Property Rights
[Ver. 3.3]

特許出願人 PATENT HOLDER	発明の名称 NAME OF PATENT	出願番号等 REGISTRATION NO./ APPLICATION NO.	備考 （出願国名） REMARKS
QUALCOMM Incorporated	Bearer control of encrypted data flows in packet data communications	JP5112864	US8,042,170; JP; BR; CN; DE; EP; GB; HK; IN; KR; MX; TW
	Spatial spreading with space-time and space-frequency transmit diversity schemes for a wireless communication system	JP4564060	US7,894,548; AR; AT; BE; CA; CH; CN; DE; DK; EP; ES; FI; FR; GB; GR; HK; HU; IE; IN; IT; KR; NL; PL; PT; RO; SE; TH; TW
	Time multiplexing of unicast and multicast signals on a downlink carrier frequency in a wireless communication system	JP4653174	US8,644,200; JP; BR; CN; EP; HK; IN; KR; MX; MY
	Systems, methods and apparatus for determining a radiated performance of a wireless device	JP4625087	US7,773,964; US8,467,756; CN; EP; HK; IN; KR
	1x and 1xEV-DO hybrid call setup	JP4880706	US8,706,144; US20140141817; CN; DE; EP; GB; IN; KR; TH
	Transmit spatial diversity for cellular single frequency networks	JP2008-547267	US8,059,608; US8,570,982; JP; CN; DE; EP; ES; FR; GB; IN; IT; KR; MY; NL; TW
	Geography-based filtering of broadcasts	JP5254019	US20070124395; JP; CN; DE; EP; GB; IN; KR; TW
	Scalable frequency band operation in wireless communication systems	JP5362803	US8,045,512; US8,842,619; JP; CN; EP; HK; IN; KR; TW
	Fast channel switching in a multimedia broadcast system	JP5059782	US8,638,714; JP; BR; CA; CN; EP; HK; IN; KR; RU; SG; TW
	Discovery of neighbor cells	JP5118135	US20070291770; BR; CA; CN; DE; EP; ES; FI; FR; GB; IN; IT; KR; NL; RU; SE; TW

Attachment 2 List of Essential Industrial Property Rights

Approved by the 95th Standard Assembly (selection of option 2)

[Ver. 3.3]

特許出願人 PATENT HOLDER	発明の名称 NAME OF PATENT	出願番号等 REGISTRATION NO./ APPLICATION NO.	備考 （出願国名） REMARKS
QUALCOMM Incorporated	Method and apparatus for determining a radiated performance of a wireless device	JP5502478	US7,925,253; CN; EP; IN; KR
	Pilot Tones In a Multi-Transmit OFDM System Usable to Capture Transmitter Diversity Benefits	JP4891239	US7,792,208; US7,372,913; CN; EP; TW
	Methods and systems for mobile WIMAX three-way downlink concurrent processing and three-way handover	JP2011-523280	US8,223,622; US8,565,061; CN; EP; IN; KR
	Switching carriers to join a multicast session in a wireless communications network	JP5318939	US8,654,690; BR; CN; EP; IN; KR; RU
	Method and apparatus to report and manage cells in a multi carrier system	JP5373052	US8,165,026; AU; BR; CA; CN; DE; EP; GB; HK; ID; IL; IN; KR; MX; MY; PH; RU; SG; TW; UA; VN
	Uplink resource management in a wireless communication system	JP5290404	US8,675,573; CN; EP; IN; KR; TW
	Handover between mobile communication networks	JP3433186	US6,385,451; CN; DE; EP; FI; FR; GB; HK
	Performing packet flow optimization with policy and charging control	JP5611973	US8,325,638; US8,582,480; JP; BR; CN; EP; IN; KR; TW
	System and method for packet acknowledgment using an acknowledgment codebook	JP5536101	US8,737,374; US20130242948; JP; CN; DE; EP; GB; IN; TW
	Methods and apparatus for coordination of sending reference signals from multiple cells	JP2012-531170	US8,670,432; US20130301531; US20130303217; US20130303157; JP; AE; BR; CA; CN; EP; HK; ID; IN; KR; MX; MY; PH; RU; TH; TW; ZA
	Method and apparatus that facilitates a timing alignment in a multicarrier system	JP5362911	US8,634,313; BR; CA; CN; EP; HK; ID; IN; KR; MX; PH; RU; SG; TH; TW; ZA

Approved by the 95th Standard Assembly
(selection of option 2)

Attachment 2 List of Essential Industrial Property Rights
[Ver. 3.3]

特許出願人 PATENT HOLDER	発明の名称 NAME OF PATENT	出願番号等 REGISTRATION NO./ APPLICATION NO.	備考 （出願国名） REMARKS
QUALCOMM Incorporated	Transmission of control information across multiple packets	JP2012-532516	US8,605,584; CN; EP; IN; KR; TW
	Apparatus and method for allocating data flows based on indication of selection criteria	JP2013-517708	US20110188376; CN; EP; IN; KR; TW
	Method and apparatus for signaling expansion and backward compatibility preservation in wireless communication systems	JP2013-518535	US20110188462; CN; EP; IN; KR; TW
	Method and apparatus for multi-radio coexistence	JP2013-528972	US20110256834; BR; CN; EP; IN; KR
	Method and apparatus for providing uniform machine-to-machine addressing	JP5596229	US20120016942; CN; EP; IN; KR
	Apparatus and method for random access channel power prioritization	JP2013-531427	US20120127931; JP; CN; EP; IN; KR
	System, apparatus, and method for improving circuit switched fallback call setup delay in wireless communication systems	JP5654125	US20110312321; CN; EP; IN; KR
	Rate matching for coordinated multipoint transmission schemes	JP2013-550542	US20120182946; BR; CN; EP; IN; KR
	Method and apparatus for enabling channel and interference estimations in macro/RRH system	JP2014-508464	US20120207043; CN; EP; IN; KR
	Methods and apparatus for effective allocation of adaptive resource partitioning information (ARPI) to pico enhanced Node B by macro enhanced Node B in heterogeneous network	JP2014-509167	US20120243488; CN; EP; IN; KR
	Transmission of control information for FDD-TDD carrier aggregation	JP2014-511092	US20120257552; CN; EP; IN; KR
	System and method for configuring remote radio heads	JP2014-513506	US8,570,971; BR; CA; CN; EP; IN; KR; RU
	System and method for managing invalid reference subframes for channel state information feedback	JP2014-516506	US20120275398; CN; EP; IN; KR

Approved by the 95th Standard Assembly
(selection of option 2)

Attachment 2 List of Essential Industrial Property Rights
[Ver. 3.3]

特許出願人 PATENT HOLDER	発明の名称 NAME OF PATENT	出願番号等 REGISTRATION NO./ APPLICATION NO.	備考 （出願国名） REMARKS
QUALCOMM Incorporated	Downlink control with control-less subframes	JP2014-521266	US20130016692; CN; EP; IN; KR; TW
	A channel state information feedback for carrier aggregation with flexible carrier configurations	JP2014-519750	US20120300641; BR; CA; CN; EP; IN; KR; RU
	Power headroom reporting related to power management maximum power reduction	JP2014-517595	US20120281568; BR; CA; CN; EP; IN; KR; RU
	Allocating physical hybrid ARQ indicator channel (PHICH) resources	JP2014-524689	US20130034028; BR; CA; CN; EP; IN; KR; RU
	Transmission of control information in a wireless network with carrier aggregation	JP2014-526196	US20130028205; AE; AU; BR; CA; CN; EP; HK; ID; IL; IN; KR; MX; MY; PH; RU; SG; TH; UA; VN; ZA
	Method and apparatus for transport of dynamic adaptive streaming over HTTP (DASH) initialization segment description fragments as user service description fragments	JP2014-527745	US20130036234; BR; CA; CN; EP; IN; KR; RU
	Support of multiple timing advance groups for user equipment in carrier aggregation in LTE	JP2014-526834	US20130064165; CN; EP; IN; KR
	Adaptive control channel design for balancing data payload size and decoding time	JP2014-530575	US20130083666; CN; EP; IN; KR
	Uplink resource management under coordinated multipoint transmission	JP2014-528677	US20130083754; CN; EP; IN; KR
	Method and apparatus for uplink transmission power control and timing in coordinated multipoint transmission schemes	JP2014-528672	US20130084913; BR; CN; EP; IN; KR
	Half-duplex/full-duplex operation for TDD carrier aggregation	JP2014-533900	US20130083704; CN; EP; IN; KR
	User equipment, base stations, and methods allowing for handling of colliding channel state information reports	JP2014-540229	US20130114455; CN; EP; IN; KR

Approved by the 95th Standard Assembly
(selection of option 2)

Attachment 2 List of Essential Industrial Property Rights
[Ver. 3.3]

特許出願人 PATENT HOLDER	発明の名称 NAME OF PATENT	出願番号等 REGISTRATION NO./ APPLICATION NO.	備考 （出願国名） REMARKS
QUALCOMM Incorporated	Structure of enhanced physical downlink control channel (e-PDCCH) in long term evolution (LTE)	JP2014-540064	US20130114565; BR; CN; EP; IN; KR
	Resource management for enhanced PDCCH	JP2014-534777	US20130114419; BR; CN; EP; IN; KR
	Search space design for e-PDCCH in wireless communication networks	JP2014-533047	US20130114529; BR; CN; EP; IN; KR
	Method and apparatus for managing retransmission resources	JP2014-533050	US20130114530; BR; CN; EP; IN; KR
	Systems, apparatus, and methods for managing information in a smart storage device	WO2014078473*	US20140141760; TW
	Signaling of supported carrier bandwidths for carrier aggregation	JP2014-544887	US20130142139; CN; EP; IN; KR; TW
	Processing enhanced PDCCH (ePDCCH) in LTE	JP2014-550412	US20130170449; BR; CN; EP; IN; KR; TW
	Improved reference signals design for time tracking in LTE-A	JP2014-549154	US20130163530; CN; EP; IN; KR
	Method and apparatus for enabling channel and interference estimations in macro/RRH system	JP2014-512713	US20120208547; CN; EP; IN; KR
	Method and system for transitions of broadcast dash service receptions between unicast and broadcast	JP2014-552386	US20130182643; BR; CN; EP; IN; KR
	Maximum power reduction for interference control in adjacent channels	JP2014-552403	US20130182663; BR; CN; EP; IN; KR
	Method and apparatus to solve physical layer issues related to multiple timing advance group support	JP2014-554737	US20130195084; CN; EP; IN; KR
	Flexible radio resource management (RRM) measurements for wireless networks	US20130196603*	JP; CN; EP; IN; KR
	Systems and methods for priority based session and mobility management	JP2014-554910	US20130195038; BR; CA; CN; EP; HK; ID; IN; KR; MY; PH; RU; TH; UA; ZA

Approved by the 95th Standard Assembly
(selection of option 2)

Attachment 2 List of Essential Industrial Property Rights
[Ver. 3.3]

特許出願人 PATENT HOLDER	発明の名称 NAME OF PATENT	出願番号等 REGISTRATION NO./ APPLICATION NO.	備考 （出願国名） REMARKS
QUALCOMM Incorporated	Resource allocation for enhanced physical downlink control channel (EPDCCH)	JP2014-555840	US20130201975; CN; EP; IN; KR
	Signaling of virtual cell identifiers and fallback operation	US20130235821*	JP; CN; EP; IN; KR
	eMBMS service activation and maintenance procedure in multi-frequency networks	US20130258934*	JP; CN; EP; IN; KR
	Secure reception reporting	US20130267202*	US14/557,273; US14/557,315; JP; CN; EP; IN
	Method and apparatus for LTE radio access network sharing	US14/387,836*	JP; CN; EP; IN; KR
	A method to enable LTE RAN sharing between multiple HRPD operators	PCT/CN2012/080622*	
	Channel state information dependent ACK/NAK bundling	US20130258960*	JP; CN; EP; IN
	H-ARQ timing determination under cross-carrier scheduling in LTE	US20130258864*	JP; CN; EP; IN; KR
	Channel state information reference signal (CSI-RS) configuration and CSI reporting restrictions	US20130258965*	JP; CN; EP; IN; KR
	Rank-specific feedback for improved MIMO support	WO2013169666*	US20130301560; JP; CN; EP; IN; KR
	Network driven cell reselection method for UEs playing eMBMS content in unicast idle mode	WO2014004927*	US20140003390; JP; CN; IN
	Methods and apparatus for coordinated multipoint (CoMP) communications	WO2014022209*	US20140036806; IN
	Method and apparatus for processing control and shared channels in an LTE system	WO2014022165*	US20140036804
	Multiple timing advance groups (TAGS)for UL carrier aggregation (CA)	WO2014028908*	US20140050194

Attachment 2 List of Essential Industrial Property Rights
[Ver. 3.3]

特許出願人 PATENT HOLDER	発明の名称 NAME OF PATENT	出願番号等 REGISTRATION NO./ APPLICATION NO.	備考 （出願国名） REMARKS
QUALCOMM Incorporated	Reference signals for an enhanced physical downlink control channel	WO2014058594*	US20140098751
	Managing cross-carrier scheduling in carrier aggregation with EPDCCH in LTE	WO2014070761*	US20140126485
	EPDCCH resource and quasi-co-location management in LTE	WO2014070311*	US20140126490
	Apparatus and methods for negotiating proactive polling interval	PCT/US2014/054772*	US14/276,680
	Interleaver and deinterleaver for use in a diversity transmission communication system	JP4574866	US7,158,498; US6,356,528; AU; BR; CA; CN; DE; EP; ES; FI; FR; GB; HK; ID; IL; IN; IT; KR; MX; NL; NO; RU; SE; SG; UA
	Method and apparatus for encrypting transmissions in a communication system	JP2011-172244	US8,787,578; US6,980,658; JP; AU; BR; CN; DE; EP; ES; FI; FR; GB; HK; ID; IL; IN; IT; KR; MX; NL; NO; RU; SE; SG; UA
	Method and System for Providing Personal Base Station Communications	JP4318860	US6,381,230; CA; CN; DE; EP; ES; FI; FR; GB; HK; IE; IT; KR; MX; SE

*The deadline for filing of a Japan counterpart of this patent application has not yet passed. Therefore a Japanese counterpart may still be filed or granted in Japan.

(Intentionally blanked)

Reference

This is the list of Essential Industrial Property Rights (IPRs) filed or applied to countries other than Japan. These are listed here as a reference, as the companies voluntarily informed ARIB of these IPRs.

(**Reference** : Not applied in Japan)

特許出願人 PATENT HOLDER	発明の名称 NAME OF PATENT	出願番号等 REGISTRATION NO./ APPLICATION NO.	備考 （出願国名） REMARKS
QUALCOMM Incorporated *10	Method and Apparatus for Radio Link Control of Signaling Messages and Short Message Data Services in a Communication System	US 7,142,565	
	Packet Flow Processing in a Communication System	US 7,277,455	
	Reverse Link Automatic Repeat Request	US 20040100927	
	System and method for scheduling transmissions in a wireless communication system	US 20050003843	
	Signaling method in an OFDM multiple access system	PCT/US2001/028314	US 7,295,509, US 20080063099, US 20050254416, EP, TW
	OFDM communications methods and apparatus	PCT/US2001/028315	US, EP, TW
	Methods and apparatuses for resource allocation randomization	US 61/021,005	

*10: These patents are applied to the part defined by ARIB STD-T95 Ver.1.0.

(**Reference** : Not applied in Japan)

特許出願人 PATENT HOLDER	発明の名称 NAME OF PATENT	出願番号等 REGISTRATION NO./ APPLICATION NO.	備考 （出願国名） REMARKS
QUALCOMM Incorporated *[20]	GPS Receiver Utilizing a Communication Link	US5,874,914	
	Reducing Satellite Signal Interference in a Global Positioning System Receiver	US6,236,354	
	Channel allocations in a communications system	US7,826,414	
	Method and apparatus for message segmentation in a wireless communication system	US7,542,482	
	Data transfer procedure for transferring data of a data sequence between a transmitting entity and a receiving entity	US7,720,079	BR; GB; HK; IL; IN; KR; SG
	Scheduled and Autonomous Transmission and Acknowledgement	US7,155,236	US20060264220; AU; BR; CA; CN; EP; HK; ID; IL; KR; MX; RU; TW; UA
	Methods and apparatus for content based notification using hierarchical groups	US20070073820	
	Method and apparatus for seamless and efficient wireless handoffs	US8,059,581	TW
	Control channel assignment in a wireless communication network	US20060133262	AR; AU; BR; IL; MX; PH; RU; SG; TH; TW; VN
	Methods and apparatus for mobile terminal-based radio resource management and wireless network optimization	US20080032677	

*[20]: These patents are applied to the part defined by ARIB STD-T95 Ver.2.0.

(**Reference** : Not applied in Japan)

特許出願人 PATENT HOLDER	発明の名称 NAME OF PATENT	出願番号等 REGISTRATION NO./ APPLICATION NO.	備考 （出願国名） REMARKS
QUALCOMM Incorporated *20	Mobile device-initiated measurement gap request	US20070097914	AR; BR; CA; CN; EP; IN; KR; RU; SG; TW
	Allocating a channel resource in a system	CA2547913	EP
	Apparatus and method for use in effecting automatic repeat requests in wireless multiple access communications systems	CA2547910	EP
	Method for extending mobile IP and AAA to enable integrated support for local access and roaming access connectivity	US6,785,256	
	Method to convey uplink traffic information	US7,382,755	
	Methods and apparatus for the utilization of core based nodes for state transfer	US6,862,446	US6,990,337; US7,369,855; US7,962,142; AU; CA; CN; EP; IN
	Methods and apparatus for operating mobile nodes in multiple states	US6,788,963	TW
	Method and apparatus for optimization of SIGCOMP UDVM performance	US7,685,293	
	Generation and detection of synchronization signal in a wireless communication system	US20080273522	
	Cell detection for mobile location with grouping diversity	US20100227612	TW
	Reprioritization of wireless networks for reselection to support voice call	US20100113010	TW

*20: These patents are applied to the part defined by ARIB STD-T95 Ver.2.0.

(**Reference** : Not applied in Japan)

特許出願人 PATENT HOLDER	発明の名称 NAME OF PATENT	出願番号等 REGISTRATION NO./ APPLICATION NO.	備考 （出願国名） REMARKS
QUALCOMM Incorporated *20	Data transmission in a TDMA system	US7,158,489	AT; DE; EP; FR; GB
	Channel allocation for communication system	US7,986,660	AT; BE; CH; DE; DK; EP; ES; FI; FR; GB; GR; IE; IT; NL; PT; RU; SE
	Transmission of reference signal on non-contiguous clusters of resources	WO2011005536	US20110141982; IN; TW
	Random access channel (RACH) optimization for a self-organizing network (SON)	US20100232318	TW
	Joint layer 3 signalling coding for multicarrier operation	WO2010127316	US20110110441; TW
	Downlink assignment indicator design for multi-carrier wireless communication	WO2010141607	US20110128922; AE; AU; CA; CN; IN; SG; TW; ZA
	Method and apparatus for facilitating radio link monitoring and recovery	WO2010144601	US20110143675; IN; TW
	Data prioritization for a power-limited UE in a wireless communication system	WO2010144864	US20110141959; TW
	A method and apparatus for dispatching a channel quality indicator feedback in multicarrier system using an anchor carrier scheme	WO2010144875	US20110141926; IL; MY; TW
	Method and apparatus for network optimization using SON solutions	WO2011005524	US20100325267; TW
	Managing video adaptation algorithms	WO2010148048	US20100316066; TW

*20: These patents are applied to the part defined by ARIB STD-T95 Ver.2.0.

(**Reference** : Not applied in Japan)

特許出願人 PATENT HOLDER	発明の名称 NAME OF PATENT	出願番号等 REGISTRATION NO./ APPLICATION NO.	備考 （出願国名） REMARKS
QUALCOMM Incorporated *20	Method and apparatus that facilitates measurement procedures in multicarrier operation	WO2010148403	US20100322079; TW
	Selecting a quality of service class identifier for a bearer	WO2011005546	US20100322069; TW
	Transport of LCS-related messages for LTE access	WO2011005516	US20110143771; TW
	GPS Receiver Utilizing a Communication Link	US6,421,002	
	GPS Receiver Utilizing a Communication Link	US6,400,314	
	Method and Apparatus for Utilizing Channel State Information in a Wireless Communication System	US7,006,848	
	Method and apparatus for time-aligning transmissions from multiple base stations in a CDMA communication system	US7,433,321	
	Signal acquisition in a wireless communication system	US8,068,530	
	Method of providing a gap indication during a sticky assignment	US20060164993	
	Pilot signal transmission for an orthogonal frequency division wireless communication system	US20090213950	TW
	Resource allocation for shared signaling channels	US20070211616	
	Method and apparatus for performing position determination with a short circuit call flow	US7,974,639	

*20: These patents are applied to the part defined by ARIB STD-T95 Ver.2.0.

(**Reference** : Not applied in Japan)

特許出願人 PATENT HOLDER	発明の名称 NAME OF PATENT	出願番号等 REGISTRATION NO./ APPLICATION NO.	備考 （出願国名） REMARKS
QUALCOMM Incorporated *20	Controlling hand-off in a mobile node with two mobile IP clients	US7,020,465	
	Methods and apparatus for tunneling between different addressing domains	US7,366,147	
	Methods and apparatus for extending mobile IP	US7,623,497	
	Methods and apparatus for aggregating MIP and AAA messages	US7,564,824	
	Packet forwarding methods for use in handoffs	US20030193912	
	Multiple access wireless communications system using a multisector configuration	US7,388,845	
	Beacon signaling in a wireless system	US6,985,498	CN; EP; HK; IN; KR
	Synchronization Techniques for a Wireless System	US7,133,354	CA
	Beacon signaling in a wireless system	US7,366,200	
	Methods and apparatus for determining, communicating and using information which can be used for interference control purposes	US20060092881	
	Method of creating and utilizing diversity in a multiple carrier communication system	US7,363,039	US20080182580; CA; EP
	Power and timing control methods and apparatus	US7,778,643	
	Wireless timing and power control	US7,668,573	

*20: These patents are applied to the part defined by ARIB STD-T95 Ver.2.0.

(**Reference** : Not applied in Japan)

特許出願人 PATENT HOLDER	発明の名称 NAME OF PATENT	出願番号等 REGISTRATION NO./ APPLICATION NO.	備考 （出願国名） REMARKS
QUALCOMM Incorporated *20	Method and apparatus for operating mobile nodes in multiple states	CA2534851	CN; EP; HK; IN; KR; RU; ZA
	Seamless context switching for radio link protocol	US20080186920	
	MIMO transmission with explicit and implicit cyclic delays	US20090197546	
	Method and apparatus for handoff between source and target access systems	US20080318575	
	Secondary synchronization codebook for E-UTRAN	US8,009,701	
	Data transmission via a relay station in a wireless communication system	US20100097978	EP
	Cell relay packet routing	US20100103861	TW
	Device attachment and bearer activation using cell relays	US20100103862	TW
	Cell relay mobility procedures	US20100103845	TW
	Cell relay protocol	US20100103864	TW
	Data transmission in a TDMA system	US6,819,937	
	Selectively including allowed CSG list in page message	US20100195573	TW
	Optimized inter-access point packet routing for IP relay nodes	WO2010118428	US20100260109; TW

*20: These patents are applied to the part defined by ARIB STD-T95 Ver.2.0.

(**Reference** : Not applied in Japan)

特許出願人 PATENT HOLDER	発明の名称 NAME OF PATENT	出願番号等 REGISTRATION NO./ APPLICATION NO.	備考 （出願国名） REMARKS
QUALCOMM Incorporated *20	Split-cell relay application protocol	WO2010120826	US20100260096; TW
	Split-cell relay packet routing	WO2010120827	US20100260126; TW
	Mobile Station Assisted Soft Handoff in a CDMA Cellular Communications System	US5,640,414	
	Comprehensive Mobile Communications Device Registration Method	US5,588,043	
	Dual Channel Slotted Paging	US6,111,865	
	Method and Apparatus for Transmitting and Receiving Data Multiplexed onto Multiple Code Channels, Frequencies and Base Stations	US6,215,777	
	Method and Apparatus for Performing Mobile Station Assisted Hard Handoff Using Error Correction Codes	US6,553,064	

*20: These patents are applied to the part defined by ARIB STD-T95 Ver.2.0.

(**Reference** : Not applied in Japan)

[Ver. 2.1]

特許出願人 PATENT HOLDER	発明の名称 NAME OF PATENT	出願番号等 REGISTRATION NO./ APPLICATION NO.	備考 （出願国名） REMARKS
QUALCOMM Incorporated	Comprehensive Mobile Communications Device Registration Method	US5,629,975	US5,621,784; US5,642,398
	Method and Apparatus for Controlling Transmission Power in a CDMA Cellular Mobile Telephone System	MY-110833-A	
	Comprehensive Mobile Communications Device Registration Method	US5,588,043	

(**Reference** : Not applied in Japan)
[Ver. 2.2]

特許出願人 PATENT HOLDER	発明の名称 NAME OF PATENT	出願番号等 REGISTRATION NO./ APPLICATION NO.	備考 （出願国名） REMARKS
QUALCOMM Incorporated	Method and System for Data and Voice Transmission Over Shared and Dedicated Channels	US6,985,510	US20060109890
	Dedicated reference signal	US20110280333	TW
	Devices for determining a reference subframe and determining a mode	US20120082049	EP;CN;IN;KR
	Reference signal configuration and relay downlink control channel	WO2012048203	US20120087299;EP
	Hybrid automatic repeat request feedback transmission in a multi component-carrier communication system using scheduling request resources	WO2012061257	US20120134305;EP;IN;TW
	Method and apparatus for rate matching with muting	WO2012061521	US20120113917;EP;AE;BR;CA;IN;MY;PH;TH
	Method and apparatus for specific absorption rate backoff in power headroom report	WO2012061582	US20120147801;EP;AR;IN;KR;TW
	Inter-frequency measurement control in a multi-carrier system	WO2012064780	US20120113866;BR;IN
	System and method for assisting in powering on sleeping network entities	WO2013002825	US20120142328;IN
	Carrier grouping for power headroom report	WO2012064872	US20120115537;IN
	Interference randomization for uplink signaling	WO2012088444	US20120163159

(**Reference** : Not applied in Japan)

[Ver. 2.2]

特許出願人 PATENT HOLDER	発明の名称 NAME OF PATENT	出願番号等 REGISTRATION NO./ APPLICATION NO.	備考 （出願国名） REMARKS
QUALCOMM Incorporated	Cross-carrier/cross-subframe indication in a multi-carrier wireless network	US20110105050	
	Method for Using Only Two Base Stations for Determining the Position of a Mobile Subscriber in a CDMA Cellular Telephone System	US6,034,635	

(**Reference** : Not applied in Japan)

[Ver. 3.0]

特許出願人 PATENT HOLDER	発明の名称 NAME OF PATENT	出願番号等 REGISTRATION NO./ APPLICATION NO.	備考 （出願国名） REMARKS
QUALCOMM Incorporated	Synchronization of wireless nodes	US8,374,163	

(**Reference** : Not applied in Japan)

[Ver. 3.3]

特許出願人 PATENT HOLDER	発明の名称 NAME OF PATENT	出願番号等 REGISTRATION NO./ APPLICATION NO.	備考 （出願国名） REMARKS
QUALCOMM Incorporated	Communique Subscriber Handoff Between A Narrowcast Cellular Communication Network And A Point-To-Point Cellular Communication Network	US6,681,115	AU; CA; DE; EP; ES; FR; GB; IT
	Methods and apparatus for separating home agent functionality	US7,697,501	US8,077,695; US8,457,099
	Time orthogonalization of reference signals	US20110085606	TW
	Utilizing a same target cell during circuit-switched and packet switched handover	US7,643,450	CA; CN; DE; EP; ES; FR; GB; IN; IT; MY; NL; SG; TW
	Apparatus and method for determining multi-antenna radiated performance of wireless devices	US8,412,110	TW
	File delivery over a broadcast network using file system abstraction, broadcast schedule messages and selective reception	US8,914,471	US14/569,318
	Method and apparatus for sending channel state information using subframe-dependent control channel formats	US20130121270	
	Phase difference signaling in MIMO mode uplink	US20130176868	
	Method for configuring a home node with a secure address for an operator network node	US20130258944	CN; EP; IN; KR
	Multiband eMBMS enhancement using carrier aggregation	US20140119265	

Attachment 3

XGP specifications

Note: This Document is reproduced without any modification from the XGP Forum Technical Standard; "A-GN4.00-03-TS XGP Specifications" under the agreement with ARIB and XGP Forum.

XGP Forum Document
A-GN4.00-03-TS

Title: XGP Specifications

Version: 03 (Revision01)

Date:

XGP Forum Classification: Unrestricted

List of contents:

Abbreviations and Acronyms.

Chapter 0 Scope and Introduction.
Chapter 1 General
Chapter 2 System Overview
Chapter 3 Physical Channel Specification
Chapter 4 Individual Channel Specification
Chapter 5 Common Channel Specification
Chapter 6 Channel Assignment
Chapter 7 Message Format and Information Elements
Chapter 8 Sequence
Chapter 9 Access Phase
Chapter 10 Global mode
Annex X Regional Condition

Appendix A: Full Subcarrier Mode
Appendix B: Modulation
Appendix C: Training Sequence
Appendix D: TCCH Sequence
Appendix E: Network Interface Requirements
Appendix F: Improvement for CCH link budget

Number of pages: 775

XGP Forum

c/o Association of Radio Industries and Businesses (ARIB)
11F, Nittochi Bldg., 4-1, Kasumigaseki 1-choume, Chiyoda-ku, Tokyo 100-0013, Japan
TEL +81-3-5510-8599 FAX +81-3-3592-1103

© XGP Forum2010

History of Revised Versions/Revisions

Version	Revision	Date	Outline
01	01	August 22, 2007	Approved by 20th General Meeting. Established
01	02	September 13, 2007	Approved by 22nd General Meeting. Revised.
01	03	October 26, 2007	Approved by NWG on October 26, 2007. Corrected typographical, grammatical, editorial, and clerical errors.
01	04	April 3, 2009	Approved by TWG on April 3, 2009. Revised.
02	01	October 5, 2010	Approved by Letter Voting. Revised.
02	02	April 26, 2011	Approved by 27th Extra General Meeting. Revised.
02	03	January 12, 2012	Approved by Letter Voting. Revised.
02	04	November 14, 2012	Approved by 29th General Meeting. Revised.
03	0	May 15, 2013	Approved by Letter Voting. Revised.
03	01	February 28, 2014	Approved by Letter Voting. Revised.

Remarks

1. The definition.

1.1. Version:
A major change such as changing of basic specifications or adding new sections that would be unable to achieve only with existing technologies, or methods written into the former version. The change made to a new version shall only be authorized by General Meeting.

1.2. Revision:
A minor change such as partial changing, or adding some words which shall not affect the basics. The change made to a new revision shall be authorized by each WG, and reported to the latest General Meeting.

2. Copyright Notice.

XGP Forum reserves all rights concerning the copyright to this document. The XGP Forum reserves the right to modify or amend this document in its own discretion without notice.

3. IPR Policy.

This document adopts fully the IPR policy of XGP Forum specified separately on its website.

4. Limitation of Liability

NOTHING IN THIS DOCUMENT CREATES ANY WARRANTIES OF TITLE OR NONINFRINGEMENT WITH RESPECT TO ANY TECHNOLOGIES, STANDARDS OR SPECIFICATIONS REFERENCED OR INCORPORATED INTO THIS DOCUMENT.

IN NO EVENT SHALL THE XGP FORUM OR ANY MEMBER BE LIABLE TO THE USER OR TO A THIRD PARTY FOR ANY CLAIM ARISING FROM OR RELATING TO THE USE OF THIS DOCUMENT, INCLUDING, WITHOUT LIMITATION, A CLAIM THAT SUCH USE INFRINGES A THIRD PARTY'S INTELLECTUAL PROPERTY RIGHTS OR THAT IT FAILS TO COMPLY WITH APPLICABLE LAWS OR REGULATIONS. BY USE OF THIS DOCUMENT, THE USER WAIVES ANY SUCH CLAIM AGAINST THE XGP FORUM AND ITS MEMBERS RELATING TO THE USE OF THIS DOCUMENT.

Amendment History

Object document	Date
Ver.03 Rev.01	February 28, 2014

Section Number in Ver.3.1	Amendment Record
10.1	Updated explanatory description referring to the relation of 3GPP Release 8, 9 , 10 and R11 to the co-existence in this XGP Ch.10 Global Mode.
10.2	Added abbreviations: “ICIC”, “eNB”, “MBMS”, “MDT”, “MMSE”, “PLMN”, “RLF”, “SON”
10.5.1.3 and 10.5.1.4	・ Changed 10.4 to 10.5 and 10.3 to 10.4.
10.6.1.3 and 10.6.1.4	・ Changed 10.5 to 10.6 and 10.3 to 10.4.
10.7	・ Added a new section 10.7 “Specification – referring to “Release 11 of 3GPP”” where Release 11 of LTE TDD specifications are introduced into XGP specification including following new features: ・ Coordinated Multi-Point (CoMP) transmission and reception ・ Enhanced downlink control channel ・ Carrier Aggregation Enhancement ・ Further Enhanced Non CA-based ICIC ・ Network-Based Positioning Support ・ Service continuity improvements for MBMS ・ Enhancement for Diverse Data Applications(eDDA) ・ Minimization of Driving Test(MDT) enhancements ・ Energy Saving function for Inter-RAT scenario ・ HeNB Mobility enhancement, ・ MMSE-Interference Rejection Combining (MMSE-IRC) ・ SON enhancement on inter-RAT Mobility Robustness Optimization (MRO) ・ Structure of section10.7 follows the basic structure of 3GPP specifications, in the same manner as those of the 10.6 of the XGP Ver. 3.0. ・ 10.7.1 Overview ・ 10.7.2 Physical layer ・ 10.7.3 MAC layer –MSL1 ・ 10.7.4 Radio Link Control (RLC) layer –MSL2 ・ 10.7.5 Packet Data Convergence Protocol (PDCP) layer –MSL 3 ・ 10.7.6 Radio Resource Control (RRC) layer

Abbreviations and Acronyms 44
Chapter 0 Scope and Introduction 48
Scope 48
Introduction 48
Chapter 1 General 50
1.1 Overview 50
1.2 Application Scope 50
1.3 Mandatory and Optional 51
1.4 Public Mode and Private Mode 51
Chapter 2 System Overview 52
2.1 System Structure 52
2.1.1 Mobile Station (MS) 52
2.1.2 Base Station (BS) 52
2.1.3 Relay Station (RS) 52
2.2 Interface Definition 53
2.3 Frequency Structure 54
2.3.1 System Bandwidth (SBW) 54
2.3.2 Effective Channel Bandwidth (ECBW) 54
2.3.3 Guard Bandwidth (GBW) 54
2.3.4 Frequency Structure Parameters 55
2.4 Access Method 56
2.4.1 Transmission Method 56
2.4.2 TDMA (Time Division Multiple Access) 57
2.4.2.1 TDMA Slot 58
2.4.2.2 TDMA Frame 58
2.4.2.3 Mandatory TDMA frame structure 59
2.4.2.4 Limitation for expanded TDMA frame structure 59
2.4.3 OFDMA (Orthogonal Frequency Division Multiple Access) 60
2.4.3.1 Subcarrier Spacing 61
2.4.3.2 Subchannel (SCH) 61
2.4.3.3 DC Carrier 64
2.4.3.4 Guard Carrier 64
2.4.4 OFDMA and TDMA 64
2.4.5 Single Carrier Frequency Division Multiple Access (SC-FDMA) Mode Coexistence with OFDMA UL 65
2.5 Physical Resource Unit (PRU) 67
2.6 Frame Structure 68

2.7 Full Subcarrier Mode 70
2.8 Multiple Input and Multiple Output Control 70
2.9 Protocol Model 71
2.9.1 Link Establishment Phase 71
2.9.2 Access Establishment Phase 71
2.9.3 Access Phase 71
2.9.4 Optional Protocol Model 71
2.9.4.1 User plane 71
2.9.4.2 Control plane 71
2.10 Correspondence of PRU, Function Channel and Physical Channel 73
2.11 Service Description 75
2.12 Protocol Structure 75
Chapter 3 Physical Channel Specification 76
3.1 Overview 76
3.2 The General Conditions for OFDM PHY Layer 77
3.2.1 OFDM Burst Structure 77
3.2.2 OFDM Symbol Structure for 37.5 kHz subcarrier spacing 77
3.2.2.1 Guard Interval 78
3.2.2.2 Windowing 78
3.2.3 OFDM Parameters for 37.5 kHz subcarrier spacing 79
3.3 The General Conditions for SC PHY Layer 82
3.3.1 SC Burst Structure 82
3.3.2 SC Block Structure 82
3.3.2.1 Guard Interval 82
3.3.2.2 Pulse Shaping Filter 83
3.3.3 SC Parameters 84
3.4 DL OFDM PHY Layer 85
3.4.1 Channel Coding for PHY Frame 85
3.4.1.1 CRC 86
3.4.1.2 Scrambling 87
3.4.1.3 Encoding 89
3.4.1.3.1 Error Correction Encoding 90
3.4.1.3.1.1 Convolutional Code (coding rate r=1/2) (Mandatory) 90
3.4.1.3.1.1.1 Convolutional Encoder 90
3.4.1.3.1.1.2 Puncturing Pattern 90
3.4.1.3.1.2 Convolutional Code (coding rate r=1/3) (Optional) 91
3.4.1.3.1.2.1 Convolutional Encoder 91

3.4.1.3.1.3 Tail Biting Convolutional Code 92
3.4.1.3.1.4 Turbo Code (Optional) 93
3.4.1.3.1.4.1 Turbo Encoder 93
3.4.1.3.1.4.2 Turbo Code Termination 94
3.4.1.3.1.4.3 Turbo Interleaver 95
3.4.1.3.1.4.4 Puncturing pattern 97
3.4.1.4 Bit-interleaving 100
3.4.1.4.1 Bit-interleaver Structure 100
3.4.1.4.2 Block Interleaver Method 101
3.4.1.4.3 Interleaver Parameters for OFDM 102
3.4.1.4.4 Output-bits after Bit-interleaver 106
3.4.1.4.5 Bit-interleaving and Rate matching 106
3.4.1.4.5.1 Bit-interleaver Structure 106
3.4.1.4.5.2 Block Interleaver Method 106
3.4.1.4.5.3 Output-bits after Bit-interleaver 107
3.4.1.5 Modulation Method 108
3.4.1.6 Precoding Method 108
3.4.1.6.1 STBC-MIMO 109
3.4.1.6.1.1 2 Layer STBC-MIMO 109
3.4.1.6.1.2 4 Layer STBC-MIMO 109
3.4.1.6.2 SM-MIMO 109
3.4.1.6.2.1 2 Layer SM-MIMO 110
3.4.1.6.2.2 4 Layer SM-MIMO 110
3.4.1.6.3 EMB-MIMO 111
3.4.1.6.3.1 Transmission Weight Calculation 111
3.4.1.6.3.2 2 Layer EMB-MIMO 112
3.4.1.6.3.3 4 Layer EMB-MIMO 112
3.4.1.6.4 Optional Precoding Method 112
3.4.1.6.4.1 Precoding for transmission on a single antenna port 112
3.4.1.6.4.2 Precoding for spatial multiplexing using antenna ports with BS-specific pilot 112
3.4.1.6.4.2.1 Precoding without CDD 113
3.4.1.6.4.2.2 Precoding for large delay CDD 113
3.4.1.6.4.2.3 Codebook for precoding 114
3.4.1.6.4.3 Precoding for transmit diversity 114
3.4.1.6.4.4 Precoding for spatial multiplexing using antenna ports with MS-specific pilot 114

3.4.1.7 Symbol Mapping Method to PRU 115
3.4.1.7.1 Symbol Mapping Method for CCCH, ANCH and CSCH 115
3.4.1.7.2 Symbol Mapping Method for EXCH 116
3.4.1.7.2.1 Symbol Mapping without DTX Symbol 116
3.4.1.7.2.2 Symbol Mapping with DTX Symbol 117
3.4.1.7.3 Symbol Mapping Method for MIMO 118
3.4.1.7.3.1 Symbol Mapping Method for STBC-MIMO 118
3.4.1.7.3.2 Symbol Mapping Method for SM-MIMO 118
3.4.1.7.3.3 Symbol Mapping Method for EMB-MIMO 119
3.4.1.7.3.4 Symbol Mapping in case that p is not 0 119
3.4.1.7.4 Symbol Mapping Method for Retransmission of CC-HARQ 121
3.4.1.7.4.1 Symbol Mapping Method except for EMB-MIMO 121
3.4.1.7.4.2 Symbol Mapping Method for EMB-MIMO 122
3.4.1.7.4.3 Symbol Mapping Method in case of full subcarrier mode 123
3.4.1.7.5 Symbol Mapping Method to PRU for Optional Physical Channel 125
3.4.1.7.5.1 Advanced Physical broadcast channel 125
3.4.1.7.5.2 Advanced Downlink ECCH Format Indicator Channel 125
3.4.1.7.5.3 Advanced Downlink ECCH 126
3.4.1.7.5.4 Advanced Downlink Hybrid-ARQ Indicator Channel 127
3.4.1.8 Summary of OFDM DL Channel Coding 128
3.4.2 Training Format for DL OFDM 129
3.4.2.1 Training Format 129
3.4.2.1.1 Training Format for ICH 129
3.4.2.1.2 Training Format for CCCH 129
3.4.2.2 Training Sequence 130
3.4.2.3 Training Index 130
3.4.2.3.1 Training Index for CCCH 130
3.4.2.3.2 Training Index for ICH 130
3.4.2.3.2.1 Training Index for SISO 130
3.4.2.3.2.2 Training Index for MIMO 131
3.4.2.3.2.3 Training Layer Mapping for MIMO 131
3.4.2.4 Advanced Synchronization Signal 133
3.4.2.4.1 Advanced primary synchronization signal 133
3.4.2.4.1.1 Sequence generation 133
3.4.2.4.1.2 Mapping to resource units 133
3.4.2.4.2 Advanced secondary synchronization signal 133
3.4.2.4.2.1 Sequence generation 133

3.4.2.4.2.2 Mapping to resource elements 134
3.4.3 Pilot for DL OFDM 135
3.4.3.1 Pilot for DL CCCH 135
3.4.3.2 Pilot for DL ICH 135
3.4.3.3 Optional Pilots for DL OFDM 135
3.4.3.3.1 BS-specific pilots 135
3.4.3.3.1.1 Sequence generation 135
3.4.3.3.1.2 Mapping to resource elements 136
3.4.3.3.2 MS-specific pilots 136
3.4.3.3.2.1 Sequence generation 136
3.4.3.3.2.2 Mapping to resource elements 137
3.4.3.3.3 Positioning pilots 138
3.4.3.3.3.1 Sequence generation 138
3.4.3.3.3.2 Mapping to resource elements 138
3.4.3.3.3.3 Positioning pilot slot configuration 139
3.4.4 Training and Pilot Boosting 139
3.4.4.1 1 Layer Format SISO/SDMA 139
3.4.4.2 2 Layer MIMO Format except for SDMA 140
3.4.4.3 4 Layer MIMO Format except for SDMA 142
3.4.4.4 Summary for Training and Pilot Boosting 143
3.4.4.5 Optional Downlink Pilot boosting 143
3.4.5 Signal for DL OFDM 143
3.4.5.1 Encoding and Small Scrambling 143
3.4.5.1.1 (8,4)-Hamming Coding 144
3.4.5.1.2 Small Scrambling Pattern 144
3.4.5.2 Modulation for Signal 145
3.4.5.3 Signal for Optional DL Physical Channel 145
3.4.5.3.1 Advanced Physical Broadcast Channel 145
3.4.5.3.1.1 Scrambling 145
3.4.5.3.1.2 Modulation 145
3.4.5.3.1.3 Layer mapping and precoding 146
3.4.5.3.2 Advanced Downlink ECCH Indicator Channel 146
3.4.5.3.2.1 Scrambling 146
3.4.5.3.2.2 Modulation 146
3.4.5.3.2.3 Layer mapping and precoding 146
3.4.5.3.3 Advanced Downlink ECCH 147
3.4.5.3.3.1 ADECCH formats 147

3.4.5.3.3.2 ADECCH multiplexing and scrambling 147
3.4.5.3.3.3 Modulation 148
3.4.5.3.3.4 Layer mapping and precoding 148
3.4.5.3.4 Advanced Downlink Hybrid-ARQ Indicator Channel 148
3.4.5.3.4.1 Modulation 149
3.4.5.3.4.2 Resource group alignment, layer mapping and precoding 150
3.4.6 Null (DTX/DC Carrier/Guard carrier) for DL OFDM 150
3.4.7 TCCH Format for DL OFDM 150
3.4.8 PRU Structure for DL OFDM 151
3.4.8.1 CCH for DL OFDM 151
3.4.8.1.1 OFDM PRU Structure for CCCH 151
3.4.8.1.2 ICH for DL OFDM 152
3.4.8.1.2.1 OFDM PRU Structure for ANCH 152
3.4.8.1.3 OFDM PRU Structure for EXCH 157
3.4.8.1.4 OFDM PRU Structure for CSCH 166
3.5 UL OFDM PHY Layer 167
3.5.1 Channel Coding for PHY Frame 167
3.5.1.1 CRC 167
3.5.1.2 Scrambling 167
3.5.1.3 Encoding 167
3.5.1.4 Bit-interleaving 168
3.5.1.5 Modulation Method 168
3.5.1.6 Precoding Method 168
3.5.1.6.1 MS Transmission Antenna Switching 168
3.5.1.7 Symbol Mapping Method to PRU 169
3.5.1.8 Summary of OFDM UL Channel Coding 169
3.5.1.9 Training for UL OFDM 169
3.5.1.10 UL Training Sequence for MS transmission frame antenna switching 169
3.5.1.11 UL Training Sequence for MS transmission slot antenna switching 169
3.5.2 Pilot for UL OFDM 169
3.5.3 Signal for UL OFDM 169
3.5.4 Null (DTX/DC Carrier/Guard Carrier) for UL OFDM 169
3.5.5 TCCH Format for UL OFDM 170
3.5.5.1 TCCH Format 170
3.5.5.2 TCCH Sequence and TCCH Sub-slot 170
3.5.6 PRU Structure for UL OFDM 171
3.5.6.1 CCH for UL OFDM 171

3.5.6.1.1 OFDM PRU Structure for CCCH 171
3.5.6.1.2 OFDM PRU Structure for TCCH 171
3.5.6.2 ICH for UL OFDM 173
3.5.6.2.1 OFDM PRU Structure for ANCH 173
3.5.6.2.2 OFDM PRU Structure for EXCH 173
3.5.6.2.3 OFDM PRU Structure for CSCH 176
3.6 UL SC PHY Layer 176
3.6.1 Channel Coding for PHY Frame 176
3.6.1.1 CRC 177
3.6.1.2 Scrambling 177
3.6.1.3 Encoding 178
3.6.1.4 Bit-interleaving 178
3.6.1.4.1 Bit-interleaver Structure 178
3.6.1.4.2 Block Interleaver Method 178
3.6.1.4.3 Interleaver Parameters for UL SC 178
3.6.1.4.4 Rate Matching Method 180
3.6.1.4.5 Output-bits After Bit-interleaver 187
3.6.1.5 Modulation Method 188
3.6.1.6 Symbol Mapping Method for Data Block 188
3.6.1.6.1 Data Block 189
3.6.1.6.2 Data Block with Virtual GI Extension 189
3.6.1.7 Symbol Mapping Method for SC Burst 191
3.6.1.7.1 Symbol Mapping Method without DTX Symbol 191
3.6.1.7.1.1 Symbol Mapping Method with DTX Symbol 192
3.6.1.7.2 Symbol Mapping Method for Retransmission (CC-HARQ) 192
3.6.1.8 Summary of SC UL Channel Coding 194
3.6.1.9 Optional Channel Coding for PHY Frame 195
3.6.1.9.1 CRC 195
3.6.1.9.2 Channel coding 195
3.6.1.9.2.1 Tail biting convolutional coding 195
3.6.1.9.2.2 Turbo coding 195
3.6.1.9.3 Rate matching 196
3.6.1.9.4 Code block concatenation 196
3.6.1.9.5 Channel Coding of UL Channels 196
3.6.1.9.5.1 Coding of data and control information on AUEDCH 196
3.6.1.9.5.2 Coding of Uplink control information on AUANCH 196
3.6.1.9.5.3 Uplink control information on AUEDCH without traffic data 197

3.6.2 Training for UL SC 197
3.6.2.1 Training Block Format 197
3.6.2.1.1 Training Format for ICH 197
3.6.2.1.2 Training Format for CCCH 198
3.6.2.2 Training Sequence 198
3.6.2.3 Training Index 198
3.6.2.3.1 Training Index for CCCH 198
3.6.2.3.2 Training Index for ICH 199
3.6.3 Pilot for UL SC 199
3.6.3.1 Pilot Index 200
3.6.3.2 Pilot for CCCH 200
3.6.3.3 Pilot for ICH 200
3.6.3.3.1 Pilot for ANCH 200
3.6.3.3.2 Pilot for EXCH 200
3.6.3.3.3 Pilot for CSCH 201
3.6.3.4 Advanced Optional Pilot Signals 201
3.6.3.4.1 Advanced Demodulation Pilot signal 201
3.6.3.4.1.1 Advanced Demodulation Pilot signal sequence 201
3.6.3.4.1.2 Mapping to physical resources 202
3.6.3.4.2 Advanced Sounding Pilot signal 202
3.6.3.4.2.1 Advanced Souding Pilot signal sequence 202
3.6.3.4.3 Mapping to physical resources 202
3.6.4 Signal for UL SC 203
3.6.4.1 Signal Encoding 203
3.6.4.1.1 (8,4) Hamming Encoding 204
3.6.4.1.2 Small Scrambling 204
3.6.4.2 Modulation for Signal 204
3.6.5 Null (DTX) for UL SC 205
3.6.6 TCCH for UL SC 206
3.6.6.1.1 TCCH Format 206
3.6.6.2 TCCH Sequence and TCCH Sub-slot 207
3.6.6.3 ATCCH for UL SC 207
3.6.6.3.1 Time and frequency structure 207
3.6.6.3.2 Access sequence generation 209
3.6.6.3.3 Baseband signal generation 210
3.6.7 SC Burst Structure for UL SC 210
3.6.7.1 CCH for UL SC 210

3.6.7.1.1 SC Burst Structure for CCCH 210
3.6.7.1.2 SC Burst Structure for TCCH 211
3.6.7.2 ICH for UL SC 212
3.6.7.2.1 SC Burst Structure for ANCH 212
3.6.7.2.2 SC Burst Structure for EXCH 213
3.6.7.2.3 SC Burst Structure for CSCH 216
3.6.7.3 CRC Unit for UL SC 219
3.6.7.4 Transmission Timing of SC Burst for UL SC 219
3.6.7.5 Optional SC Burst Structure for UL SC 220
Chapter 4 Individual Channel Specification 221
4.1 Overview 221
4.1.1 Usage of PRU 221
4.1.1.1 Common Channel (CCH) 222
4.1.1.2 Individual Channel (ICH) 222
4.1.1.2.1 PRU Numbering 223
4.1.1.2.2 PRU Numbering for Asymmetric frame 224
4.1.2 QoS Class (Access Mode) 225
4.1.2.1 Fast Access Channel Based on Map (FM-Mode) 225
4.1.2.2 High Quality Channel Based on Carrier Sensing (QS-Mode) 225
4.1.3 XGP Protocol Outline 226
4.1.3.1 Frame Structure 226
4.1.3.2 Protocol Structure 227
4.2 Functional Channel 229
4.2.1 Channel Composition 229
4.2.1.1 Individual Control Channel (ICCH) 230
4.2.1.2 EXCH Control Channel (ECCH) 230
4.2.1.3 EXCH Data Channel (EDCH) 230
4.2.1.4 CSCH Data Channel (CDCH) 231
4.2.1.5 Traffic Channel (TCH) 231
4.2.1.6 Accompanied Control Channel (ACCH) 231
4.3 Optional Functional Control Channel 231
4.3.1 DL Control Channel Composition 232
4.3.1.1 Advanced Downlink EXCH Control Channel (ADECCH) 232
4.3.1.1.1 Function of ADECCH 232
4.3.1.1.2 Blind detection for ADECCH 232
4.3.1.2 Advanced Downlink ECCH Format Indicator Channel (ADEFICH) 233
4.3.1.3 Advanced Downlink Hybrid-ARQ Indicator Channel (ADHICH) 233

4.3.2 Uplink Control Channel Composition 233
4.3.2.1 AUANCH/RCH 233
4.3.2.2 AUANCH/ACKCH 233
4.3.2.3 AUANCH/CQICH 233
4.4 PHY Layer Structure and Frame Format 234
4.4.1 PHY Frame Structure 234
4.4.1.1 ANCH/ICCH 235
4.4.1.2 ANCH/ECCH 236
4.4.1.3 EXCH/EDCH 237
4.4.1.3.1 PRU Combining 238
4.4.1.4 CSCH/TCH 239
4.4.1.5 CSCH/CDCH 240
4.4.1.6 AUANCH/RCH 240
4.4.1.7 AUANCH/ACKCH 242
4.4.1.8 AUANCH/CQICH 243
4.4.2 Signal Symbol 244
4.4.2.1 Signal Symbol Structure 244
4.4.3 PHY Header 245
4.4.3.1 PHY Header Structure 245
4.4.3.1.1 ANCH/ECCH PHY Header Structure 245
4.4.3.1.2 ANCH/ICCH PHY Header Structure 246
4.4.3.1.3 CSCH/CDCH PHY Header Structure 247
4.4.3.1.4 CSCH/TCH PHY Header Structure 247
4.4.3.1.5 ECCH PHY Header Structure 248
4.4.3.2 ECCH 249
4.4.3.2.1 CRC Error Happening on the ANCH 249
4.4.4 PHY Payload 251
4.4.4.1 PHY Payload Structure 251
4.4.5 PHY Trailer 251
4.4.5.1 CRC 251
4.4.5.2 TAIL 251
4.4.6 PHY Control Layer 251
4.4.6.1 Channel Identifier (CI) 251
4.4.6.1.1 CI of ANCH 252
4.4.6.1.2 CI of CSCH 252
4.4.6.2 Shift Direction (SD) 252
4.4.6.3 ANCH Power Control (APC) 253

4.4.6.4 Power Control (PC) 253
4.4.6.5 MCS Indicator (MI) and MCS Request (MR) 254
4.4.6.5.1 MI and MR in ECCH 255
4.4.6.5.1.1 MI Indication Timing of DL 257
4.4.6.5.1.2 MI Indication Timing of UL 258
4.4.6.5.2 MI and MR in CSCH 259
4.4.6.5.2.1 MI Indication Timing of DL 259
4.4.6.5.2.2 MI Indication Timing of UL 259
4.4.6.6 Acknowledgement (ACK) 260
4.4.6.6.1 ACK in ECCH 260
4.4.6.6.1.1 Response Timing of DL ACK 261
4.4.6.6.1.2 Response Timing of UL ACK 262
4.4.6.6.2 ACK in CDCH 262
4.4.6.6.2.1 Response Timing of DL ACK 262
4.4.6.6.2.2 Response Timing of UL ACK 263
4.4.6.6.3 ACK in AUANCH/ACKCH 263
4.4.6.6.3.1 Response Timing of UL ACK 263
4.4.6.6.3.2 ACK/NACK bundling 264
4.4.6.6.3.3 ACK/NACK multiplexing 264
4.4.6.6.4 ACK in ADHICH 266
4.4.6.6.4.1 Response Timing of DL ACK 266
4.4.6.7 Channel quality report 266
4.4.6.7.1 CQI definition 267
4.4.6.7.2 PMI definition 268
4.4.6.7.3 Periodic CQI/PMI/RI reporting on CQICH 268
4.4.6.8 MAP 271
4.4.6.8.1 Response Timing of MAP 273
4.4.6.9 Validity (V) 274
4.4.6.9.1 V Indication Timing of DL 278
4.4.6.9.2 V Indication Timing of UL 279
4.4.6.10 HARQ Cancel (HC) 280
4.4.6.10.1 HC Indication Timing of DL 280
4.4.6.10.2 HC Indication Timing of UL 282
4.4.6.11 Request Channel (RCH) 283
4.4.6.11.1 UL Data Size Notification 283
4.4.6.11.2 Transmission Power Margin Notification 284
4.4.6.12 Request Channel (RCH) 284

4.4.6.12.1 Optional UL Data Size Notification 284
4.4.6.12.2 Advanced Transmission Power Margin Notification (ATPMN) Report 285
4.4.6.13 ANCH MCS Indicator (AMI) 286
4.4.6.14 ANCH MCS Request (AMR) 287
4.4.6.15 MIMO type for EXCH (MT) 287
4.4.6.16 Stream Indicator for EXCH (SI) 288
4.4.6.17 MIMO type for EXCH (SR) 288
4.4.6.18 Bandwidth Indicator for EXCH (BI) 288
4.4.7 PHY Control Layer for ADECCH 290
4.4.7.1 ADECI format 0 290
4.4.7.1.1 Flag for format0/format1A differentiation 290
4.4.7.1.2 Hopping flag 290
4.4.7.1.3 Resource unit assignment and hopping resource allocation 290
4.4.7.1.4 Modulation and coding scheme and redundancy version 291
4.4.7.1.5 Advanced New Data Indicator (ANDI) 291
4.4.7.1.6 TPC command for scheduled AUEDCH 291
4.4.7.1.7 Cyclic shift for DM RS 291
4.4.7.1.8 UL index 291
4.4.7.1.9 Downlink assignment index for uplink control signaling 292
4.4.7.1.10 CQI request 292
4.4.7.2 ADECI format 1 293
4.4.7.2.1 Resource allocation header 293
4.4.7.2.2 Resource unit assignment 293
4.4.7.2.3 Modulation and coding scheme 293
4.4.7.2.4 HARQ process number 293
4.4.7.2.5 ANDI 294
4.4.7.2.6 Redundancy version 294
4.4.7.2.7 TPC command for AUANCH 294
4.4.7.2.8 Downlink assignment index in downlink control signaling 294
4.4.7.3 ADECI format 1A 294
4.4.7.3.1 Flag for format0/format1A differentiation 294
4.4.7.3.2 Localized/Distributed VRU assignment flag 295
4.4.7.3.3 Resource unit assignment 295
4.4.7.3.4 Modulation and coding scheme 295
4.4.7.3.5 HARQ process number 295
4.4.7.3.6 ANDI 295
4.4.7.3.7 Redundancy version 295

4.4.7.3.8 TPC command for AUANCH 295
4.4.7.3.9 Downlink Assignment Index for downlink control signaling 295
4.4.7.4 ADECI format 1B 296
4.4.7.4.1 Localized/Distributed VRU assignment flag 296
4.4.7.4.2 Resource unit assignment 296
4.4.7.4.3 Modulation and coding scheme 296
4.4.7.4.4 HARQ process number 296
4.4.7.4.5 ANDI 296
4.4.7.4.6 Redundancy version 296
4.4.7.4.7 TPC command for AUANCH 296
4.4.7.4.8 Downlink Assignment Index for downlink control signaling 296
4.4.7.4.9 TPMI information for precoding 297
4.4.7.4.10 PMI confirmation for precoding 297
4.4.7.5 ADECI format 1C 297
4.4.7.5.1 Gap value 297
4.4.7.5.2 Resource unit assignment 297
4.4.7.5.3 Transport block size index 297
4.4.7.6 ADECI format 1D 297
4.4.7.6.1 Localized/Distributed VRU assignment flag 298
4.4.7.6.2 Resource unit assignment 298
4.4.7.6.3 Modulation and coding scheme 298
4.4.7.6.4 HARQ process number 298
4.4.7.6.5 ANDI 298
4.4.7.6.6 Redundancy version 298
4.4.7.6.7 TPC command for AUANCH 298
4.4.7.6.8 Downlink assignment index for DL control signaling 298
4.4.7.6.9 TPMI information for precoding 298
4.4.7.6.10 Downlink power offset 299
4.4.7.7 ADECI format 2 299
4.4.7.7.1 Resource allocation header 299
4.4.7.7.2 Resource unit assignment 299
4.4.7.7.3 TPC command for AUANCH 299
4.4.7.7.4 Downlink assignment index for downlink control signaling 299
4.4.7.7.5 HARQ process number 299
4.4.7.7.6 Transport block to codeword swap flag 300
4.4.7.7.7 Modulation and coding scheme 300
4.4.7.7.8 ANDI 300

4.4.7.7.9 Redundancy version 300
4.4.7.7.10 Precoding information 300
4.4.7.8 ADECI format 2A 301
4.4.7.8.1 Resource allocation header 301
4.4.7.8.2 Resource unit assignment 301
4.4.7.8.3 TPC command for AUANCH 301
4.4.7.8.4 Downlink assignment index for downlink control signaling 301
4.4.7.8.5 HARQ process number 301
4.4.7.8.6 Transport block to codeword swap flag 301
4.4.7.8.7 Modulation and coding scheme 301
4.4.7.8.8 ANDI 302
4.4.7.8.9 Redundancy version 302
4.4.7.8.10 Precoding information 302
4.4.7.9 ADECI format 3 302
4.4.7.9.1 TPC command 302
4.4.7.10 ADECI format 3A 302
4.4.7.10.1 TPC command 303
4.4.8 Summary of PHY Frame Format 303
4.5 MAC Layer Structure and Frame Format 305
4.5.1 Overview 305
4.5.1.1 Format Regulations 305
4.5.1.2 MAC Frame Composition 306
4.5.2 MAC Frame Format 307
4.5.2.1 MAC Frame Structure 308
4.5.2.1.1 ICCH, EDCH and CDCH 308
4.5.2.1.2 TCH 308
4.5.2.1.3 ACCH 309
4.5.2.1.3.1 Frame Structure 309
4.5.2.1.3.2 ACCH Layer 2 Frame Signal Structure 309
4.5.2.2 MAC Header 312
4.5.2.2.1 Each Field of MAC Header 314
4.5.2.2.1.1 Frame Division Information (B) 314
4.5.2.2.1.2 Data Type (CD) 315
4.5.2.2.1.3 Data Part Sharing (MD) 315
4.5.2.2.1.4 Bit of Payload Length Identification (F) 316
4.5.2.2.1.5 QCS-ID (QI) 316
4.5.2.2.1.6 Sequence Number (N) 316

4.5.2.2.1.7 Index (IX) ... 317
4.5.2.2.1.8 Data Part Length (L) ... 317
4.5.2.2.1.9 User Data Length (Ln) ... 318
4.5.2.2.1.10 Information Area (DATA) ... 318
4.5.2.3 MAC Payload ... 318
4.5.2.3.1 Upper Layer Data ... 318
4.5.2.3.2 MAC Control Information ... 319
4.5.3 Segmentation, Combining and Concatenation ... 319
4.5.3.1 Upper Layer Data Segmentation ... 319
4.5.3.2 MAC Frame Segmentation in case of Retransmission ... 320
4.5.3.3 Combining Multiple Upper Layer Data into Single MAC Payload ... 321
4.5.3.4 MAC Frame Concatenation ... 322
4.5.4 Segmentation, Combining and Concatenation ... 323
4.5.5 MAC Control Layer ... 324
4.5.5.1 MAC Control Protocol ... 325
4.5.5.1.1 Receive Ready (RR) ... 325
4.5.5.1.2 Receive Not Ready (RNR) ... 326
4.5.5.1.3 Frame Reject (FRMR) ... 327
4.5.5.1.4 Selective Reject (SREJ) ... 327
4.5.5.1.5 Reject (REJ) ... 328
4.5.5.2 Control Operation Elements ... 328
4.5.5.2.1 Poll bit ... 328
4.5.5.2.2 Variables ... 329
4.5.5.2.2.1 The range of a sequence number and variable ... 329
4.5.5.2.2.2 Send state variable V(S) ... 329
4.5.5.2.2.3 Acknowledge state variable V(A) ... 329
4.5.5.2.2.4 Send sequence number N(S) ... 329
4.5.5.2.2.5 Receive state variable V(R) ... 329
4.5.5.2.2.6 Receive sequence number N(R) ... 329
4.5.5.2.3 Timers ... 329
4.5.5.2.3.1 Response acknowledge timer T1 ... 329
4.5.5.2.3.2 Response transfer timer T2 ... 330
4.5.5.2.3.3 Peer station busy supervisory timer T3 ... 330
4.5.5.2.3.4 Link alive check timer T4 ... 330
4.5.5.3 Access Establishment Phase Control Protocol ... 330
4.6 Optional MAC Layer Structure and sub-layer ... 330
4.6.1 Overview ... 330

4.6.2 MAC sub-layer1 (MSL1) 330
4.6.3 MAC sub-layer2 (MSL2) 333
4.6.3.1 TMD PDU 334
4.6.3.2 UMD PDU 334
4.6.3.3 AMD PDU 334
4.6.3.4 AMD PDU segment 335
4.6.3.5 State variables parameter and timers 335
4.6.4 MAC sublayer 3 (MSL3) 337
4.6.4.1 Overview 337
4.6.4.2 UL Data Transfer Procedures 338
4.6.4.3 DL Data Transfer Procedures 338
4.6.4.4 MSL 3 chuck 339
4.6.4.5 Header Compression and Decompression 339
4.6.4.6 Ciphering and Deciphering 340
4.6.4.7 Integrity Protection and Verification 340
4.6.4.8 Handling of unknown, unforeseen and erroneous protocol data 340
4.6.4.9 Protocol data units, formats and parameters 340
4.6.4.10 Formats 341
4.6.4.10.1 General 341
4.6.4.11 Parameters 341
4.6.4.12 State variables 341
4.6.4.13 Timers 342
4.6.4.14 Constants 342
Chapter 5 Common Channel Specification 343
5.1 Overview 343
5.2 Common Channel (CCH) 343
5.2.1 Logical Common Channel (LCCH) 345
5.2.2 Definition of Superframe 346
5.2.3 Superframe Structure of DL LCCH 346
5.2.3.1 LCCH Interval Value (n) 346
5.2.3.2 Frame Basic Unit Length (n_{SUB}) 347
5.2.3.3 Number of Same Paging Groups (n_{SG}) 347
5.2.3.4 PCH Number (n_{PCH}) 347
5.2.3.5 Paging Grouping Factor (n_{GROUP}) 347
5.2.3.6 Battery Saving Cycle Maximum value (n_{BS}) 347
5.2.3.7 The Relationship Among Profile Data 348
5.2.3.8 Paging Group Calculation Rules 348

5.2.3.9 Optional Paging Group Calculation Rules 349
5.2.3.10 Intermittent Transmission Timing for ICH 349
5.2.4 Structure of UL LCCH 350
5.2.5 Structure of DL LCCH 350
5.2.6 LCCH Multiplexing 351
5.2.6.1 When PCH Paging Groups Being Independent 352
5.2.6.2 When PCH Paging Groups Being Inter-related 352
5.3 PHY Frame Format 353
5.3.1 BCCH 353
5.3.2 PCH 354
5.3.3 TCCH 354
5.3.4 SCCH 354
5.3.4.1 DL SCCH 354
5.3.4.2 UL SCCH for OFDMA 355
5.3.4.3 UL SCCH for SC 355
5.4 Control Field Format 356
5.4.1 Channel Identifier (CI) 356
5.4.2 BS Information (BS-Info) 356
5.4.2.1 Base Station ID (BSID) 357
5.4.2.1.1 System Type 357
5.4.2.1.2 Operator ID 357
5.4.2.1.3 System Additional ID 357
5.4.2.1.3.1 Paging Area Number 357
5.4.2.1.3.2 Sequence Number 357
5.4.2.2 BS Additional ID 357
5.4.3 Common Control Information (CCI) 358
5.4.3.1 Absolute Slot Number 358
5.4.4 Mobile Station ID (MSID) 358
5.5 MSG Field 359
5.5.1 Message Type List 359
5.5.2 MSG (BCCH) 360
5.5.2.1 "Radio Channel Information Broadcasting" Message 360
5.5.2.2 "System Information Broadcasting" Message 367
5.5.2.3 "Optional Information Broadcasting" Message 370
5.5.3 MSG (Optional BCCH) 371
5.5.3.1 MSG (BCCH) 371
5.5.4 MSG (PCH) 372

5.5.4.1 “No Paging” Message 374
5.5.4.2 "Paging Type 1" Message (single paging / 50 bits' Paging ID)..... 376
5.5.4.3 "Paging Type 2" Message (single paging / 34 bits' Paging ID)..... 378
5.5.4.4 "Paging Type 3" Message (single paging / 24 bits' Paging ID)..... 380
5.5.4.5 "Paging Type 4" Message (multiplex paging / 34 bits' Paging ID)..... 382
5.5.4.6 "Paging Type 5" Message (multiplex paging / 24 bits' Paging ID)..... 385
5.5.4.7 "Paging Type 6" Message (paging and LCH assignment / 34 bits' Paging ID).. 387
5.5.4.8 "Paging Type 7" Message (paging and LCH assignment / 24 bits' Paging ID).. 390
5.5.5 MSG (Optional PCCH) 392
5.5.6 MSG (SCCH) 393
5.5.6.1 DL SCCH 393
5.5.6.1.1 "Idle" Message..... 394
5.5.6.1.2 "LCH Assignment 1" Message..... 395
5.5.6.1.3 "LCH Assignment 2" Message..... 399
5.5.6.1.4 "LCH Assignment 3" Message..... 404
5.5.6.1.5 "LCH Assignment Standby" Message..... 409
5.5.6.1.6 "LCH Assignment Reject" Message..... 414
5.5.6.2 UL SCCH 419
5.5.6.2.1 "LCH Assignment Re-request" Message 420
Chapter 6 Channel Assignment 422
6.1 Overview..... 422
6.2 Link Establishment Control 422
6.3 Channel Assignment Control 424
6.4 Connection Control 425
6.4.1 FM-Mode..... 425
6.4.1.1 Connection Control 425
6.4.1.1.1 Access Timing 427
6.4.1.1.1.1 Overview 427
6.4.1.1.1.2 5ms frame unit..... 427
6.4.1.1.1.3 2.5ms frame unit..... 429
6.4.1.1.1.4 10ms frame unit..... 430
6.4.1.1.1.5 MS processing capabilities..... 432
6.4.1.1.2 Bandwidth Request by MS 433
6.4.1.1.3 DL EXCH Holding Duration 433
6.4.1.2 Channel Selection..... 434
6.4.1.2.1 Vacant PRU Judgment by UL Carrier Sensing 434
6.4.1.2.2 ANCH Allocation..... 435

6.4.1.2.3 EXCH Allocation 435
6.4.2 QS-Mode 436
6.4.2.1 Channel Selection 436
6.4.2.1.1 CSCH Allocation 436
6.5 Radio State Management 437
6.5.1 Idle State 438
6.5.2 Active State 439
6.5.3 Sleep State 440
6.6 Optional Radio State Management 441
6.6.1 Idle State 442
6.6.2 Active State 442
6.7 ICH continuation transmission 443
6.8 Optional Random access procedure 443
6.9 Summary of Parameters 445
Chapter 7 Message Format and Information Elements 447
7.1 Overview 447
7.2 Message Format 447
7.2.1 Format Regulations 447
7.2.2 Message Type 448
7.2.2.1 Link Setup Request 449
7.2.2.2 Link Setup Request (SC) 450
7.2.2.3 Link Setup Response 451
7.2.2.4 Extension Function Request 452
7.2.2.5 Extension Function Response 453
7.2.2.6 Connection Request 454
7.2.2.7 Connection Response 455
7.2.2.8 ANCH/CSCH Switching Confirmation 456
7.2.2.9 ANCH/CSCH Switching Indication 457
7.2.2.10 ANCH/CSCH Switching Request 458
7.2.2.11 ANCH/CSCH Switching Rejection 459
7.2.2.12 ANCH/CSCH Switching Re-request 460
7.2.2.13 TDMA Slot Limitation Request 461
7.2.2.14 CQI Report 461
7.2.2.15 CQI Report Indication 462
7.2.2.16 Additional LCH Confirmation 462
7.2.2.17 Additional LCH Indication 463
7.2.2.18 Additional QCS Request 463

7.2.2.19 Additional QCS Request Indication 464
7.2.2.20 Additional QCS Response 464
7.2.2.21 Additional QCS Rejection 465
7.2.2.22 Additional QCS Re-request 465
7.2.2.23 Connection Release 466
7.2.2.24 Connection Release Acknowledgement 467
7.2.2.25 QCS Release 467
7.2.2.26 QCS Release Acknowledgement 468
7.2.2.27 Authentication Information 1 468
7.2.2.28 Authentication Information 2 469
7.2.2.29 Encryption Key Indication 469
7.2.2.30 QCS Status Enquiry Response 470
7.2.2.31 QCS Status Enquiry Request 470
7.3 Information Element Format 471
7.3.1 Format Regulations 471
7.3.2 Single Octet Information Element Identifier 472
7.3.2.1 Channel Type 472
7.3.2.2 Connection Type 473
7.3.2.3 Extension Function Sequence 473
7.3.2.4 Result of Location Registration 474
7.3.2.5 TDMA Slot Specification 475
7.3.3 Multiple Octet Information Element Identifier 476
7.3.3.1 Area Information 478
7.3.3.2 Authentication Information 1 481
7.3.3.2.1 Authentication Data 1 (Authentication method Request) 481
7.3.3.2.2 Authentication Data 1 (Authentication method Acknowledge) 482
7.3.3.2.3 Authentication Data 1 (Transparent control information) 482
7.3.3.2.4 Authentication Data 1 (Encryption Indication) 483
7.3.3.3 Authentication Information 2 484
7.3.3.3.1 Authentication Data 2 (Authentication method Response) 485
7.3.3.3.2 Authentication Data 2 (Transparent control information) 486
7.3.3.3.3 Authentication Data 2 (Re-Authentication Request) 486
7.3.3.3.4 Authentication Data 2 (Encryption Request) 486
7.3.3.4 Cause 487
7.3.3.5 CCH Superframe Configuration 489
7.3.3.6 Communication Parameter 494
7.3.3.7 Connection-ID 499

7.3.3.8 CQI 499
7.3.3.9 Disconnection Type 501
7.3.3.10 Encryption Key Set 502
7.3.3.11 Extension Function Number 502
7.3.3.12 MS Performance 504
7.3.3.13 MSID 510
7.3.3.14 Protocol Version 512
7.3.3.15 PRU Information 512
7.3.3.16 QCS Information 514
7.3.3.17 QoS 515
7.3.3.18 QCS Status 515
7.3.3.19 Scheduling Information 517
7.3.3.20 Source BS-info 518
7.3.3.21 Target BS-info 519
7.3.3.22 MAP Origin 519
7.3.3.23 MSID (SC) 520
7.3.3.24 Power Report 523
7.3.3.25 Report Indication 523
7.3.3.26 Encryption Key Information 524
7.3.3.27 MIMO Information 524
7.3.3.28 ICH Continuation Transmission Information 526
7.3.4 Information Element Rules 527
7.3.4.1 Error process 527
7.3.4.1.1 Protocol Identifier 527
7.3.4.1.2 Incomplete message 527
7.3.4.1.3 Unexpected message type or message sequence error 527
7.3.4.1.4 Mandatory information element error 527
7.3.4.1.4.1 Missing mandatory information element 527
7.3.4.1.4.2 Invalid mandatory information element 527
7.3.4.1.4.3 Unexpected mandatory information element 528
7.3.4.1.4.4 Unrecognized mandatory information element 528
7.3.4.1.5 Optional information element error 528
7.3.4.2 Information elements order 528
7.3.4.3 Duplicated information elements 529
Chapter 8 Sequence 530
8.1 Overview 530
8.2 Sequence 530

8.2.1 Outgoing Call 530
8.2.2 Incoming Call 532
8.2.3 Release 534
8.2.3.1 Connection Release 534
8.2.3.1.1 Connection Release from MS 534
8.2.3.1.2 Connection Release from BS 535
8.2.3.2 QCS Release 535
8.2.3.2.1 QCS Release Triggered by MS 535
8.2.3.2.2 QCS Release Triggered by BS 536
8.2.4 Location Registration 537
8.2.5 ANCH/CSCH Switching 539
8.2.5.1 ANCH/CSCH Switching Triggered by MS 539
8.2.5.2 ANCH/CSCH Switching Triggered by BS 540
8.2.5.3 ANCH/CSCH Switching Rejection 541
8.2.5.4 ANCH/CSCH Switching Re-request 542
8.2.6 Handover 543
8.2.6.1 Normal Handover Triggered by BS 543
8.2.6.2 Normal Handover Triggered by MS 545
8.2.6.3 Seamless Handover 547
8.2.7 Link Channel Establishment 549
8.2.7.1 Link Channel Assignment 549
8.2.7.2 Link Channel Assignment Standby 549
8.2.7.3 Link Channel Re-request Sequence 550
8.2.7.4 Link Channel Request Standby and Link Channel Assignment Re-request 550
8.2.7.5 Link Channel Assignment Rejection 551
8.2.8 Additional QCS 552
8.2.8.1 Additional QCS 552
8.2.8.2 Additional QCS Request Indication 552
8.2.8.3 Additional QCS Rejection 553
8.2.8.4 Additional QCS with Extra LCH 553
8.2.8.5 Additional QCS with Re-request of Extra LCH 554
8.2.9 Status Check 555
8.2.9.1 QCS Status Check Triggered by MS 555
8.2.9.2 QCS Status Check Triggered by BS 555
8.2.10 CQI Transmission 556
8.2.10.1 CQI Report 556
8.2.10.2 CQI Report Indication 556

8.3 Radio Connection Management Sequence 556
8.3.1 Paging 557
8.3.2 Radio connection establishment 557
8.3.2.1 Radio connectionSetupComplete 558
8.3.3 Radio connection reconfiguration 559
8.3.4 Radio connection re-establishment 560
8.3.5 Radio connection release 561
8.3.6 Radio Link Failure 561
8.4 Optional Mobility sequence 562
8.4.1 Mobility Management in IDLE State 562
8.4.1.1 Cell selection 562
8.4.1.2 Cell reselection 563
8.4.2 Mobility Management in active state 564
8.4.2.1 General 564
8.4.2.2 Handover 565
8.4.3 Measurements 567
8.4.3.1 Intra-frequency neighbour (cell) measurements 568
8.4.3.2 Inter-frequency neighbour (cell) measurements 568
8.4.3.3 measurement configuration 568
8.4.3.4 Measurement reporting 569
Chapter 9 Access Phase 570
9.1 Overview 570
9.2 Retransmission Control Method 570
9.2.1 ARQ 570
9.2.1.1 Procedure of ARQ 570
9.2.1.2 Setting the Timing for Transmission of the ACK Field in CDCH 570
9.2.1.3 Timing of Retransmission 571
9.2.1.4 Example of ARQ Retransmission 571
9.2.1.5 Example of Sequence 572
9.2.1.6 About the Switch of ARQ and the Adaptive Modulation 573
9.2.2 HARQ 573
9.2.2.1 Procedure of HARQ 573
9.2.2.2 Retransmission Rule in FM-Mode 574
9.2.2.3 HARQ Approval Condition 576
9.2.2.4 HARQ Cancel Condition 576
9.2.2.5 Setting the Timing for the Transmission of the ACK Field in the ANCH 577
9.2.2.6 Timing of Retransmission 579

9.2.2.6.1 HARQ Retransmission Timing for High Performance MS 579
9.2.2.6.2 HARQ Retransmission Timing for Low Performance MS 580
9.2.2.7 Example of HARQ Retransmission 581
9.2.2.8 Example of Sequence 582
9.2.2.9 Switch of HARQ and the Adaptive Modulation 583
9.2.2.10 Increment Redundancy (IR) Method 584
9.2.2.11 Retransmission Count 585
9.3 Optional Retransmission Control Method 585
9.3.1 HARQ 585
9.3.2 ARQ 587
9.3.2.1 ARQ Retransmission procedure 587
9.3.2.2 Polling 589
9.3.2.3 Status report 590
9.4 QCS and Connection 591
9.4.1 Service Class 593
9.4.2 QoS Parameter 594
9.4.2.1 Forwarding Delay 594
9.4.2.2 Jitter 594
9.4.2.3 Frame Error Rate (FER) 595
9.4.2.4 Guarantee Bandwidth 595
9.4.2.5 Average Bit Rate 595
9.4.2.6 Traffic Priority 595
9.5 Access Phase Control 596
9.5.1 Power Control 596
9.5.2 Timing Control 597
9.5.3 Link Adaptation Control 599
9.5.3.1 MCS Switching 599
9.5.3.1.1 Decision of Transmission MCS 599
9.5.3.1.2 Decision of The Reception of Demodulation MCS 599
9.5.3.1.3 Setup of Modulation Method in MR Field for Transmission 599
9.5.4 ANCH/CSCH Scheduling Control 601
9.5.5 Interference Avoidance Control 602
9.5.5.1 ANCH/CSCH Disconnect Detection 602
9.5.5.2 ANCH/CSCH Switching 603
9.5.5.2.1 MS Origin ANCH/CSCH Switching 604
9.5.5.2.2 BS Origin ANCH/CSCH Switching 605
9.5.5.2.3 Retransmission of ANCH/CSCH Switching Indication 606

9.5.5.2.4 Switchback Operation 606
9.5.6 Handover Control 608
9.5.6.1 Normal Handover 608
9.5.6.2 Seamless Handover 609
9.6 MAC Layer Control 610
9.6.1 Window Control 610
9.6.2 Flow Control 612
9.6.3 Retransmission Control by SR Method 614
9.6.4 Notification and Recovery of Error Condition 616
9.7 Encryption Field 617
9.8 Semi-Persistent Scheduling (SPS) 617
Chapter 10 Global Mode 618
10.1 Introduction 618
10.2 Abbreviations and Acronyms for Global Mode 619
10.3 XGP unique optional feature 620
10.3.1 Public Waning System (PWS) 620
10.3.1.1 Overview 620
10.3.1.2 Reception of the *Paging* message by the UE 621
10.3.1.3 Actions upon reception of the SystemInformationBlockType1 message 621
10.3.1.4 Actions upon reception of SystemInformationBlockType10 message 621
10.3.1.5 Actions upon reception of SystemInformationBlockType11 message 621
10.3.1.6 Actions upon reception of SystemInformationBlockType12 message 622
10.3.1.7 *Paging message update* 622
10.4 Specification - referring to “Release 8 of 3GPP” 622
10.4.1 System Overview 624
10.4.1.1 System Structure 624
10.4.1.2 Interface Definition 624
10.4.1.3 Frequency structure 624
10.4.1.4 Access Method 624
10.4.1.5 Frame Structure 625
10.4.1.6 Physical Resource Unit (PRU) 625
10.4.1.7 MAC and Radio Connection for Global Mode 625
10.4.1.8 Protocol Model 626
10.4.1.9 RF characteristics 626
10.4.1.9.1 Operating bands 626
10.4.1.9.2 Operation bands of BS and MS for XGP Global Mode are recommended as defined in section 5 of [2] and [1] respectively. Besides, the XGP Global Mode must

support other operating bands defined by the operation country/region.Transmitter characteristics ... 626
10.4.1.9.3 Receiver characteristics ... 627
10.4.1.9.4 Performance requirement ... 627
10.4.2 Physical Channel Specification ... 627
10.4.2.1 Overview ... 627
10.4.2.2 The General Conditions for OFDM PHY Layer ... 627
10.4.2.3 The General Conditions for SC PHY Layer ... 628
10.4.2.4 DL OFDM PHY Layer ... 628
10.4.2.4.1 General structure for downlink physical channels ... 628
10.4.2.4.2 Channel Coding ... 628
10.4.2.4.3 Advanced Downlink EDCH ... 628
10.4.2.4.4 Advanced Broadcast Control Channel ... 629
10.4.2.4.5 Advanced Downlink ECCH Format Indicator Channel ... 629
10.4.2.4.6 Advanced Downlink ECCH ... 629
10.4.2.4.7 Advanced Downlink Hybrid-ARQ Indicator Channel ... 629
10.4.2.4.8 Pilots ... 630
10.4.2.4.9 Synchronization signals ... 630
10.4.2.5 UL SC PHY Layer ... 630
10.4.2.5.1 General structure for uplink physical channels ... 630
10.4.2.5.1 Channel Coding ... 630
10.4.2.5.2 Advanced Uplink EDCH ... 631
10.4.2.5.3 Advanced Uplink ANCH ... 631
10.4.2.5.4 Advanced Timing Correct Channel ... 631
10.4.2.5.5 Pilots ... 631
10.4.2.6 Modulation mapper ... 631
10.4.2.7 Pseudo-random sequence generation ... 632
10.4.3 Individual Channel Specification ... 632
10.4.3.1 Functional Channel Composition ... 632
10.4.3.2 Mapping to physical channels ... 632
10.4.3.3 PHY control procedures ... 632
10.4.3.3.1 Advanced Downlink ECCH procedures ... 632
10.4.3.3.2 Advanced Downlink EDCH related procedures ... 633
10.4.3.3.3 Advanced Uplink ANCH related procedures ... 633
10.4.3.3.4 Advanced Uplink EDCH related procedures ... 633
10.4.3.3.5 UL Power Control ... 633
10.4.3.4 MAC Layer Control ... 633

10.4.3.4.1 Overview 633
10.4.3.4.2 MAC sub-layer1 634
10.4.3.4.3 MAC sub-layer2 634
10.4.3.4.4 MAC sub-layer3 634
10.4.4 Common Channel Specification 634
10.4.4.1 Common control channel Composition 634
10.4.4.2 Common control channel reception 635
10.4.4.3 Paging Group Calculation Rules 635
10.4.5 Channel Assignment 635
10.4.5.1 Radio State Management 635
10.4.5.2 Random Access procedure 635
10.4.6 Message Format and Information Elements 636
10.4.6.1 ADECI format 636
10.4.6.2 MSG (BCCH) 636
10.4.6.3 MSG (PCCH) 636
10.4.7 Sequence 636
10.4.7.1 Radio Connection Management Sequence 636
10.4.7.1.1 Paging 637
10.4.7.1.2 Radio connection establishment 637
10.4.7.1.3 Radio connection reconfiguration 637
10.4.7.1.4 Radio connection re-establishment 637
10.4.7.1.5 Radio connection release 638
10.4.7.1.6 Radio Link Failure 638
10.4.7.2 Mobility sequence 638
10.4.7.2.1 Mobility Management in Idle State 638
10.4.7.2.2 Mobility Management in Active State 639
10.4.7.3 Measurements 639
10.4.8 Access Phase 639
10.4.8.1 Retransmission Control Method 639
10.4.8.1.1 HARQ 639
10.4.8.1.2 ARQ 639
10.4.8.2 Semi-Persistent Scheduling 640
10.5 Specification - referring to “Release 9 of 3GPP” 640
10.5.1 Overview 641
10.5.1.1 Overall architecture 641
10.5.1.2 Physical layer – Layer 1 642
10.5.1.3 MAC, RLC, and PDCP layers - Layer 2 642

10.5.1.4 RRC layer – Layer 3 642
10.5.1.5 E-UTRAN identities 642
10.5.1.6 ARQ and HARQ 642
10.5.1.7 Mobility 642
10.5.1.8 Scheduling and Rate Control 643
10.5.1.9 DRX in RRC_CONNECTED 643
10.5.1.10 QoS 643
10.5.1.11 Security 643
10.5.1.12 Radio Resource Management aspects 643
10.5.1.13 Operation bands 644
10.5.1.14 UE capabilities 644
10.5.1.15 Support for self-configuration and self-optimization 644
10.5.2 Physical layer 644
10.5.2.1 General description 644
10.5.2.1.1 Relation to other layers 644
10.5.2.1.2 General description of Layer 1 644
10.5.2.2 Frame Structure 644
10.5.2.3 Uplink Physical Channels and Modulation 645
10.5.2.3.1 Overview 645
10.5.2.3.2 Slot structure and physical resources 645
10.5.2.3.3 Physical uplink shared channel 645
10.5.2.3.4 Physical uplink control channel 646
10.5.2.3.5 Reference signals 646
10.5.2.3.6 SC-FDMA baseband signal generation 646
10.5.2.3.7 Physical random access channel 646
10.5.2.3.8 Modulation and upconversion 646
10.5.2.4 Downlink Physical Channels and Modulation 647
10.5.2.4.1 Overview 647
10.5.2.4.2 Slot structure and physical resource elements 647
10.5.2.4.3 General structure for downlink physical channels 647
10.5.2.4.4 Physical downlink shared channel 648
10.5.2.4.5 Physical broadcast channel 648
10.5.2.4.6 Physical Multicast Channel 648
10.5.2.4.7 Physical control format indicator channel 648
10.5.2.4.8 Physical downlink control channel 648
10.5.2.4.9 Physical hybrid ARQ indicator channel 648
10.5.2.4.10 Reference signals 649

10.5.2.4.11 Synchronization signals 649
10.5.2.4.12 OFDM baseband signal generation 649
10.5.2.4.13 Modulation and upconversion 649
10.5.2.5 Channel coding, multiplexing and interleaving 649
10.5.2.5.1 Generic procedures 649
10.5.2.5.2 Uplink transport channels and control information 649
10.5.2.5.2.1 Uplink shared channel 649
10.5.2.5.2.2 Uplink control information on PUCCH 650
10.5.2.5.2.3 Uplink control information on PUSCH without UL-SCH data 650
10.5.2.5.3 Downlink transport channels and control information 650
10.5.2.5.3.1 Broadcast channel 650
10.5.2.5.3.2 Downlink shared channel, Paging channel and Multicast channel ... 650
10.5.2.5.3.3 Downlink control information 651
10.5.2.5.3.4 Control format indicator 651
10.5.2.5.3.5 HARQ indicator (HI) 651
10.5.2.6 Physical layer procedures 651
10.5.2.6.1 Synchronization procedures 651
10.5.2.6.2 Power control 651
10.5.2.6.2.1 Uplink power control 651
10.5.2.6.2.2 Downlink power allocation 651
10.5.2.6.3 Random access procedure 652
10.5.2.6.4 Physical downlink shared channel related procedures 652
10.5.2.6.4.1 UE procedure for receiving the physical downlink shared channel... 652
10.5.2.6.4.2 UE procedure for reporting channel quality indication (CQI), precoding matrix indicator (PMI) and rank indication (RI) 652
10.5.2.6.4.3 UE procedure for reporting ACK/NACK 652
10.5.2.6.5 Physical uplink shared channel related procedures 653
10.5.2.6.6 Physical downlink control channel procedures 653
10.5.2.6.7 Physical uplink control channel procedures 653
10.5.2.7 Measurements 653
10.5.2.7.1 UE measurement capabilities 653
10.5.2.7.2 E-UTRAN measurement abilities 653
10.5.3 MAC layer – MSL1 654
10.5.3.1 General 654
10.5.3.1.1 MAC architecture 654
10.5.3.1.2 Services 654
10.5.3.1.3 Functions 654

10.5.3.1.4 Channel structure 654
10.5.3.1.4.1 Transport Channels 654
10.5.3.1.4.2 Logical Channels 654
10.5.3.1.4.3 Mapping of Transport Channels to Logical Channels 654
10.5.3.2 MAC procedures 654
10.5.3.2.1 Random Access procedure 654
10.5.3.2.2 Maintenance of Uplink Time Alignment 655
10.5.3.2.3 DL-SCH data transfer 655
10.5.3.2.4 UL-SCH data transfer 655
10.5.3.2.5 PCH reception 655
10.5.3.2.6 BCH reception 655
10.5.3.2.7 Discontinuous Reception (DRX) 655
10.5.3.2.8 MAC reconfiguration 655
10.5.3.2.9 MAC Reset 655
10.5.3.2.10 Semi-Persistent Scheduling 656
10.5.3.2.11 Handling of unknown, unforeseen and erroneous protocol data 656
10.5.3.3 Protocol Data Units, formats and parameters 656
10.5.3.3.1 Protocol Data Units 656
10.5.3.3.2 Formats and parameters 656
10.5.3.4 Variables and constants 656
10.5.4 Radio Link Control (RLC) layer – MSL2 656
10.5.4.1 General 656
10.5.4.1.1 RLC architecture 656
10.5.4.1.2 Services 657
10.5.4.1.3 Functions 657
10.5.4.1.4 Data available for transmission 657
10.5.4.2 Procedures 657
10.5.4.2.1 Data transfer procedures 657
10.5.4.2.2 ARQ procedures 657
10.5.4.2.3 SDU discard procedures 657
10.5.4.2.4 Re-establishment procedure 657
10.5.4.2.5 Handling of unknown, unforeseen and erroneous protocol data 657
10.5.4.3 Protocol data units, formats and parameters 658
10.5.4.3.1 Protocol data units 658
10.5.4.3.2 Formats and parameters 658
10.5.4.4 Variables, constants and timers 658
10.5.5 Packet Data Convergence Protocol (PDCP) layer – MSL3 658

10.5.5.1 General 658
10.5.5.1.1 PDCP architecture 658
10.5.5.1.2 Services 658
10.5.5.1.3 Functions 658
10.5.5.1.4 Data available for transmission 658
10.5.5.2 PDCP procedures 659
10.5.5.2.1 PDCP Data Transfer Procedures 659
10.5.5.2.2 Re-establishment procedure 659
10.5.5.2.3 PDCP Status Report 659
10.5.5.2.4 PDCP discard 659
10.5.5.2.5 Header Compression and Decompression 659
10.5.5.2.6 Ciphering and Deciphering 659
10.5.5.2.7 Integrity Protection and Verification 659
10.5.5.2.8 Handling of unknown, unforeseen and erroneous protocol data 659
10.5.5.3 Protocol data units, formats and parameters 660
10.5.5.3.1 Protocol data units 660
10.5.5.3.2 Formats 660
10.5.5.3.3 Parameters 660
10.5.5.4 Variables, constants and timers 660
10.5.6 Radio Resource Control (RRC) layer 660
10.5.6.1 General 660
10.5.6.1.1 Architecture 660
10.5.6.1.2 Services 660
10.5.6.1.3 Functions 661
10.5.6.2 Procedures 661
10.5.6.2.1 General 661
10.5.6.2.2 System information 661
10.5.6.2.2.1 Introduction 661
10.5.6.2.2.2 System information acquisition 661
10.5.6.2.2.3 Acquisition of an SI message 661
10.5.6.2.3 Connection control 661
10.5.6.2.3.1 Introduction 661
10.5.6.2.3.2 Paging 661
10.5.6.2.3.3 RRC connection establishment 662
10.5.6.2.3.4 Initial security activation 662
10.5.6.2.3.5 RRC connection reconfiguration 662
10.5.6.2.3.6 Counter check 662

10.5.6.2.3.7 RRC connection re-establishment 662
10.5.6.2.3.8 RRC connection release 663
10.5.6.2.3.9 RRC connection release requested by upper layers 663
10.5.6.2.3.10 Radio resource configuration 663
10.5.6.2.3.11 Radio link failure related actions 663
10.5.6.2.3.12 UE actions upon leaving RRC_CONNECTED 663
10.5.6.2.3.13 UE actions upon PUCCH/ SRS release request 663
10.5.6.2.3.14 Proximity indication 663
10.5.6.2.4 Inter-RAT mobility 664
10.5.6.2.5 Measurements 664
10.5.6.2.6 Other procedures 664
10.5.6.3 Protocol data units, formats and parameters 664
10.5.6.3.1 RRC messages 664
10.5.6.3.2 RRC information elements 664
10.5.6.3.3 RRC multiplicity and type constraint values 665
10.5.6.4 Variables and constants 665
10.5.6.5 Protocol data unit abstract syntax 665
10.5.6.6 Specified and default radio configurations 665
10.5.6.6.1 Specified configurations 665
10.5.6.6.2 Default radio configurations 665
10.5.6.7 Radio information related interactions between network nodes 665
10.5.6.8 UE capability related constraints and performance requirements 666
10.6 Specification - referring to “Release 10 of 3GPP” 666
10.6.1 Overview 667
10.6.1.1 Overall architecture 667
10.6.1.2 Physical layer – Layer 1 670
10.6.1.3 MAC, RLC, and PDCP layers - Layer 2 670
10.6.1.4 RRC layer – Layer 3 670
10.6.1.5 E-UTRAN identities 671
10.6.1.6 ARQ and HARQ 671
10.6.1.7 Mobility 671
10.6.1.8 Scheduling and Rate Control 671
10.6.1.9 DRX in RRC_CONNECTED 672
10.6.1.10 QoS 672
10.6.1.11 Security 672
10.6.1.12 Radio Resource Management aspects 672
10.6.1.13 Operation bands 673

10.6.1.14 UE capabilities 673
10.6.1.15 Support for self-configuration and self-optimisation 673
10.6.1.16 Deployment Scenarios for CA 673
10.6.2 Physical layer 673
10.6.2.1 General description 673
10.6.2.1.1 Relation to other layers 673
10.6.2.1.2 General description of Layer 1 674
10.6.2.2 Frame Structure 674
10.6.2.3 Uplink Physical Channels and Modulation 674
10.6.2.3.1 Overview 674
10.6.2.3.2 Slot structure and physical resources 674
10.6.2.3.3 Physical uplink shared channel 675
10.6.2.3.4 Physical uplink control channel 675
10.6.2.3.5 Reference signals 676
10.6.2.3.6 SC-FDMA baseband signal generation 676
10.6.2.3.7 Physical random access channel 676
10.6.2.3.8 Modulation and upconversion 676
10.6.2.4 Downlink Physical Channels and Modulation 676
10.6.2.4.1 Overview 676
10.6.2.4.2 Slot structure and physical resource elements 677
10.6.2.4.3 General structure for downlink physical channels 677
10.6.2.4.4 Physical downlink shared channel 678
10.6.2.4.5 Physical broadcast channel 678
10.6.2.4.6 Physical Multicast Channel 678
10.6.2.4.7 Physical control format indicator channel 678
10.6.2.4.8 Physical downlink control channel 678
10.6.2.4.9 Physical hybrid ARQ indicator channel 678
10.6.2.4.10 Reference signals 679
10.6.2.4.11 Synchronization signals 679
10.6.2.4.12 OFDM baseband signal generation 679
10.6.2.4.13 Modulation and upconversion 679
10.6.2.5 Channel coding, multiplexing and interleaving 680
10.6.2.5.1 Generic procedures 680
10.6.2.5.2 Uplink transport channels and control information 680
10.6.2.5.2.1 Uplink shared channel 680
10.6.2.5.2.2 Uplink control information on PUCCH 680
10.6.2.5.2.3 Uplink control information on PUSCH without UL-SCH data 681

10.6.2.5.3 Downlink transport channels and control information 681
10.6.2.5.3.1 Broadcast channel..... 681
10.6.2.5.3.2 Downlink shared channel, Paging channel and Multicast channel ... 681
10.6.2.5.3.3 Downlink control information 682
10.6.2.5.3.4 Control format indicator 682
10.6.2.5.3.5 HARQ indicator (HI) 682
10.6.2.6 Physical layer procedures 682
10.6.2.6.1 Synchronisation procedures 682
10.6.2.6.2 Power control..... 683
10.6.2.6.2.1 Uplink power control..... 683
10.6.2.6.2.2 Downlink power allocation..... 683
10.6.2.6.3 Random access procedure..... 683
10.6.2.6.4 Physical downlink shared channel related procedures 683
10.6.2.6.4.1 UE procedure for receiving the physical downlink shared channel... 683
10.6.2.6.4.2 UE procedure for reporting Channel State Information (CSI) 684
10.6.2.6.4.3 UE procedure for reporting ACK/NACK..... 684
10.6.2.6.5 Physical uplink shared channel related procedures..... 684
10.6.2.6.6 Physical downlink control channel procedures 684
10.6.2.6.7 Physical uplink control channel procedures..... 685
10.6.2.7 Measurements 685
10.6.2.7.1 UE measurement capabilities 685
10.6.2.7.2 E-UTRAN measurement abilities 685
10.6.3 MAC layer – MSL1 685
10.6.3.1 General 685
10.6.3.1.1 MAC architecture..... 685
10.6.3.1.2 Services..... 686
10.6.3.1.3 Functions..... 686
10.6.3.1.4 Channel structure 686
10.6.3.1.4.1 Transport Channels..... 686
10.6.3.1.4.2 Logical Channels..... 686
10.6.3.1.4.3 Mapping of Transport Channels to Logical Channels..... 686
10.6.3.2 MAC procedures 686
10.6.3.2.1 Random Access procedure 686
10.6.3.2.2 Maintenance of Uplink Time Alignment 686
10.6.3.2.3 DL-SCH data transfer 687
10.6.3.2.4 UL-SCH data transfer 687
10.6.3.2.5 PCH reception 687

10.6.3.2.6 BCH reception 687
10.6.3.2.7 Discontinuous Reception (DRX) 687
10.6.3.2.8 MAC reconfiguration 687
10.6.3.2.9 MAC Reset 687
10.6.3.2.10 Semi-Persistent Scheduling 687
10.6.3.2.11 Activation/Deactivation of SCells 688
10.6.3.2.12 Handling of unknown, unforeseen and erroneous protocol data 688
10.6.3.3 Protocol Data Units, formats and parameters 688
10.6.3.3.1 Protocol Data Units 688
10.6.3.3.2 Formats and parameters 688
10.6.3.4 Variables and constants 688
10.6.4 Radio Link Control (RLC) layer – MSL2 689
10.6.4.1 General 689
10.6.4.1.1 RLC architecture 689
10.6.4.1.2 Services 689
10.6.4.1.3 Functions 689
10.6.4.1.4 Data available for transmission 689
10.6.4.2 Procedures 689
10.6.4.2.1 Data transfer procedures 689
10.6.4.2.2 ARQ procedures 689
10.6.4.2.3 SDU discard procedures 690
10.6.4.2.4 Re-establishment procedure 690
10.6.4.2.5 Handling of unknown, unforeseen and erroneous protocol data 690
10.6.4.3 Protocol data units, formats and parameters 690
10.6.4.3.1 Protocol data units 690
10.6.4.3.2 Formats and parameters 690
10.6.4.4 Variables, constants and timers 690
10.6.5 Packet Data Convergence Protocol (PDCP) layer – MSL3 690
10.6.5.1 General 690
10.6.5.1.1 PDCP architecture 690
10.6.5.1.2 Services 690
10.6.5.1.3 Functions 691
10.6.5.1.4 Data available for transmission 691
10.6.5.2 PDCP procedures 691
10.6.5.2.1 PDCP Data Transfer Procedures 691
10.6.5.2.2 Re-establishment procedure 691
10.6.5.2.3 PDCP Status Report 691

10.6.5.2.4 PDCP discard 691
10.6.5.2.5 Header Compression and Decompression 691
10.6.5.2.6 Ciphering and Deciphering 691
10.6.5.2.7 Integrity Protection and Verification 691
10.6.5.2.8 Handling of unknown, unforeseen and erroneous protocol data 692
10.6.5.3 Protocol data units, formats and parameters 692
10.6.5.3.1 Protocol data units 692
10.6.5.3.2 Formats 692
10.6.5.3.3 Parameters 692
10.6.5.4 Variables, constants and timers 692
10.6.6 Radio Resource Control (RRC) layer 692
10.6.6.1 General 692
10.6.6.1.1 Architecture 692
10.6.6.1.2 Services 693
10.6.6.1.3 Functions 693
10.6.6.2 Procedures 693
10.6.6.2.1 General 693
10.6.6.2.2 System information 693
10.6.6.2.2.1 Introduction 693
10.6.6.2.2.2 System information acquisition 693
10.6.6.2.2.3 Acquisition of an SI message 693
10.6.6.2.3 Connection control 693
10.6.6.2.3.1 Introduction 693
10.6.6.2.3.2 Paging 694
10.6.6.2.3.3 RRC connection establishment 694
10.6.6.2.3.4 Initial security activation 694
10.6.6.2.3.5 RRC connection reconfiguration 694
10.6.6.2.3.6 Counter check 694
10.6.6.2.3.7 RRC connection re-establishment 695
10.6.6.2.3.8 RRC connection release 695
10.6.6.2.3.9 RRC connection release requested by upper layers 695
10.6.6.2.3.10 Radio resource configuration 695
10.6.6.2.3.11 Radio link failure related actions 695
10.6.6.2.3.12 UE actions upon leaving RRC_CONNECTED 696
10.6.6.2.3.13 UE actions upon PUCCH/ SRS release request 696
10.6.6.2.3.14 Proximity indication 696
10.6.6.2.4 Inter-RAT mobility 696

10.6.6.2.5 Measurements ... 696
10.6.6.2.6 Other procedures ... 697
10.6.6.3 Protocol data units, formats and parameters ... 697
10.6.6.3.1 RRC messages ... 697
10.6.6.3.2 RRC information elements ... 697
10.6.6.3.3 RRC multiplicity and type constraint values ... 697
10.6.6.4 Variables and constants ... 697
10.6.6.5 Protocol data unit abstract syntax ... 697
10.6.6.6 Specified and default radio configurations ... 698
10.6.6.6.1 Specified configurations ... 698
10.6.6.6.2 Default radio configurations ... 698
10.6.6.7 Radio information related interactions between network nodes ... 698
10.6.6.8 UE capability related constraints and performance requirements ... 698
10.7 Specification - referring to “Release 11 of 3GPP” ... 698
10.7.1 Overview ... 700
10.7.1.1 Overall architecture ... 700
10.7.1.2 Physical layer – Layer 1 ... 702
10.7.1.3 MAC, RLC, and PDCP layers - Layer 2 ... 703
10.7.1.4 RRC layer – Layer 3 ... 703
10.7.1.5 E-UTRAN identities ... 703
10.7.1.6 ARQ and HARQ ... 703
10.7.1.7 Mobility ... 703
10.7.1.8 Scheduling and Rate Control ... 704
10.7.1.9 DRX in RRC_CONNECTED ... 704
10.7.1.10 QoS ... 704
10.7.1.11 Security ... 704
10.7.1.12 Service continuity for MBMS ... 704
10.7.1.13 Radio Resource Management aspects ... 705
10.7.1.14 Operation bands ... 705
10.7.1.15 UE capabilities ... 705
10.7.1.16 Support for self-configuration and self-optimisation ... 705
10.7.1.17 Deployment Scenarios for CA ... 705
10.7.2 Physical layer ... 706
10.7.2.1 General description ... 706
10.7.2.1.1 Relation to other layers ... 706
10.7.2.1.2 General description of Layer 1 ... 706
10.7.2.2 Frame Structure ... 706

10.7.2.3 Uplink Physical Channels and Modulation 706
10.7.2.3.1 Overview 706
10.7.2.3.2 Slot structure and physical resources 707
10.7.2.3.3 Physical uplink shared channel 707
10.7.2.3.4 Physical uplink control channel 708
10.7.2.3.5 Reference signals 708
10.7.2.3.6 SC-FDMA baseband signal generation 708
10.7.2.3.7 Physical random access channel 708
10.7.2.3.8 Modulation and upconversion 708
10.7.2.4 Downlink Physical Channels and Modulation 708
10.7.2.4.1 Overview 708
10.7.2.4.2 Slot structure and physical resource elements 709
10.7.2.4.3 General structure for downlink physical channels 709
10.7.2.4.4 Physical downlink shared channel 710
10.7.2.4.5 Physical broadcast channel 710
10.7.2.4.6 Physical Multicast Channel 710
10.7.2.4.7 Physical control format indicator channel 710
10.7.2.4.8 Physical downlink control channel 710
10.7.2.4.9 Enhanced physical downlink control channel 710
10.7.2.4.10 Physical hybrid ARQ indicator channel 711
10.7.2.4.11 Reference signals 711
10.7.2.4.12 Synchronization signals 711
10.7.2.4.13 OFDM baseband signal generation 712
10.7.2.4.14 Modulation and upconversion 712
10.7.2.5 Channel coding, multiplexing and interleaving 712
10.7.2.5.1 Generic procedures 712
10.7.2.5.2 Uplink transport channels and control information 712
10.7.2.5.2.1 Uplink shared channel 712
10.7.2.5.2.2 Uplink control information on PUCCH 713
10.7.2.5.2.3 Uplink control information on PUSCH without UL-SCH data 713
10.7.2.5.3 Downlink transport channels and control information 713
10.7.2.5.3.1 Broadcast channel 713
10.7.2.5.3.2 Downlink shared channel, Paging channel and Multicast channel ... 714
10.7.2.5.3.3 Downlink control information 714
10.7.2.5.3.4 Control format indicator 714
10.7.2.5.3.5 HARQ indicator (HI) 714
10.7.2.6 Physical layer procedures 715

10.7.2.6.1 Synchronisation procedures 715
10.7.2.6.2 Power control 715
10.7.2.6.2.1 Uplink power control 715
10.7.2.6.2.2 Downlink power allocation 715
10.7.2.6.3 Random access procedure 715
10.7.2.6.4 Physical downlink shared channel related procedures 715
10.7.2.6.4.1 UE procedure for receiving the physical downlink shared channel 715
10.7.2.6.4.2 UE procedure for reporting Channel State Information (CSI) 716
10.7.2.6.4.3 UE procedure for reporting ACK/NACK 716
10.7.2.6.5 Physical uplink shared channel related procedures 716
10.7.2.6.6 Physical downlink control channel procedures 717
10.7.2.6.7 Physical uplink control channel procedures 717
10.7.2.7 Measurements 717
10.7.2.7.1 UE measurement capabilities 717
10.7.2.7.2 E-UTRAN measurement abilities 718
10.7.3 MAC layer – MSL1 718
10.7.3.1 General 718
10.7.3.1.1 MAC architecture 718
10.7.3.1.2 Services 718
10.7.3.1.3 Functions 718
10.7.3.1.4 Channel structure 718
10.7.3.1.4.1 Transport Channels 718
10.7.3.1.4.2 Logical Channels 718
10.7.3.1.4.3 Mapping of Transport Channels to Logical Channels 718
10.7.3.2 MAC procedures 719
10.7.3.2.1 Random Access procedure 719
10.7.3.2.2 Maintenance of Uplink Time Alignment 719
10.7.3.2.3 DL-SCH data transfer 719
10.7.3.2.4 UL-SCH data transfer 719
10.7.3.2.5 PCH reception 719
10.7.3.2.6 BCH reception 719
10.7.3.2.7 Discontinuous Reception (DRX) 720
10.7.3.2.8 MAC reconfiguration 720
10.7.3.2.9 MAC Reset 720
10.7.3.2.10 Semi-Persistent Scheduling 720
10.7.3.2.11 Activation/Deactivation of SCells 720
10.7.3.2.12 Handling of unknown, unforeseen and erroneous protocol data 720

10.7.3.3 Protocol Data Units, formats and parameters 720
10.7.3.3.1 Protocol Data Units 720
10.7.3.3.2 Formats and parameters 720
10.7.3.4 Variables and constants 720
10.7.4 Radio Link Control (RLC) layer – MSL2 721
10.7.4.1 General 721
10.7.4.1.1 RLC architecture 721
10.7.4.1.2 Services 721
10.7.4.1.3 Functions 721
10.7.4.1.4 Data available for transmission 721
10.7.4.2 Procedures 721
10.7.4.2.1 Data transfer procedures 721
10.7.4.2.2 ARQ procedures 722
10.7.4.2.3 SDU discard procedures 722
10.7.4.2.4 Re-establishment procedure 722
10.7.4.2.5 Handling of unknown, unforeseen and erroneous protocol data 722
10.7.4.3 Protocol data units, formats and parameters 722
10.7.4.3.1 Protocol data units 722
10.7.4.3.2 Formats and parameters 722
10.7.4.4 Variables, constants and timers 722
10.7.5 Packet Data Convergence Protocol (PDCP) layer – MSL3 723
10.7.5.1 General 723
10.7.5.1.1 PDCP architecture 723
10.7.5.1.2 Services 723
10.7.5.1.3 Functions 723
10.7.5.1.4 Data available for transmission 723
10.7.5.2 PDCP procedures 723
10.7.5.2.1 PDCP Data Transfer Procedures 723
10.7.5.2.2 Re-establishment procedure 723
10.7.5.2.3 PDCP Status Report 723
10.7.5.2.4 PDCP discard 723
10.7.5.2.5 Header Compression and Decompression 724
10.7.5.2.6 Ciphering and Deciphering 724
10.7.5.2.7 Integrity Protection and Verification 724
10.7.5.2.8 Handling of unknown, unforeseen and erroneous protocol data 724
10.7.5.3 Protocol data units, formats and parameters 724
10.7.5.3.1 Protocol data units 724

10.7.5.3.2 Formats 724
10.7.5.3.3 Parameters 725
10.7.5.4 Variables, constants and timers 725
10.7.6 Radio Resource Control (RRC) layer 725
10.7.6.1 General 725
10.7.6.1.1 Architecture 725
10.7.6.1.2 Services 725
10.7.6.1.3 Functions 725
10.7.6.2 Procedures 725
10.7.6.2.1 General 725
10.7.6.2.2 System information 725
10.7.6.2.2.1 Introduction 725
10.7.6.2.2.2 System information acquisition 726
10.7.6.2.2.3 Acquisition of an SI message 726
10.7.6.2.3 Connection control 726
10.7.6.2.3.1 Introduction 726
10.7.6.2.3.2 Paging 726
10.7.6.2.3.3 RRC connection establishment 726
10.7.6.2.3.4 Initial security activation 726
10.7.6.2.3.5 RRC connection reconfiguration 727
10.7.6.2.3.6 Counter check 727
10.7.6.2.3.7 RRC connection re-establishment 727
10.7.6.2.3.8 RRC connection release 727
10.7.6.2.3.9 RRC connection release requested by upper layers 727
10.7.6.2.3.10 Radio resource configuration 727
10.7.6.2.3.11 Radio link failure related actions 728
10.7.6.2.3.12 UE actions upon leaving RRC_CONNECTED 728
10.7.6.2.3.13 UE actions upon PUCCH/ SRS release request 728
10.7.6.2.3.14 Proximity indication 728
10.7.6.2.4 Inter-RAT mobility 728
10.7.6.2.5 Measurements 728
10.7.6.2.6 Other procedures 729
10.7.6.2.7 MBMS 729
10.7.6.3 Protocol data units, formats and parameters 729
10.7.6.3.1 RRC messages 729
10.7.6.3.2 RRC information elements 729
10.7.6.3.3 RRC multiplicity and type constraint values 729

10.7.6.4 Variables and constants 730
10.7.6.5 Protocol data unit abstract syntax 730
10.7.6.6 Specified and default radio configurations 730
10.7.6.6.1 Specified configurations 730
10.7.6.6.2 Default radio configurations 730
10.7.6.7 Radio information related interactions between network nodes 730
10.7.6.8 UE capability related constraints and performance requirements 730
Annex X: Regional Condition 731
X.1 Scope 731
X.2 The Radio Band 731
X.2.1 Taiwan Condition 731
X.3 The Effective Isotropic Radiated Power (EIRP) 731
X.3.1 Taiwan Condition 731
Appendix A: Full Subcarrier Mode 732
A.1 Overview 732
A.2 Definition of Full Subcarrier Mode 732
Appendix B: Modulation 733
B.1 BPSK 733
B.2 π/2 - BPSK 734
B.3 QPSK 735
B.4 π/4 - QPSK 736
B.5 8PSK 737
B.6 16QAM 738
B.7 64QAM 740
B.8 256QAM 743
B.9 16PSK 749
B.10 Optional Modulation Method 750
B.10.1 BPSK 750
B.10.2 QPSK 751
B.10.3 16QAM 752
B.10.4 64QAM 754
Appendix C: Training Sequence 757
C.1 OFDM Training Sequence 757
C.2 SC Training Sequence 762
Appendix D: TCCH Sequence 767
D.1 OFDM TCCH Sequence 767
D.2 SC TCCH sequence 768

Appendix E: Network Interface Requirements 769
E.1 Overview 769
E.2 Network Functions 769
E.2.1 Paging Function 769
E.2.1.1 Paging Area 770
E.2.1.2 The Recognition of Paging Area 770
E.2.1.3 Paging Group 771
E.2.1.4 Incoming Call 771
E.2.2 Home Location Register (HLR) Function 771
E.2.3 Handover Functions 772
E.2.4 Authentication Authorization Accounting (AAA) Function 772
E.2.4.1 Authentication Procedure 772
E.2.4.2 Authentication Timing 773
Appendix F: Improvement for CCH linkbudget 774
F.1 Overview 774
F.2 Dual CCH 774
F.3 CCH Continuation Transmission 774

Abbreviations and Acronyms

AAA	Authentication, Authorization, Accounting
AAS	Adaptive array Antenna System
ABCCH	Advanced Broadcast Control Channel
ACCH	Accompanied Control Channel
ACK	Acknowledgment
ACS	Advanced Cyclic Shift
ADC	Advanced Direct Current
ADECCH	Advanced Downlink ECCH
ADECI	Advanced Downlink ECCH Control Information
ADECFII	Advanced Downlink ECCH Control Format Indicator Information
ADEDCH	Advanced Downlink EDCH
ADEFICH	Advanced Downlink ECCH Format Indicator Channel
ADHICH	Advanced Downlink Hybrid-ARQ Indicator Channel
ADPCM	Adaptive Differential Pulse Code Modulation
AGT	Advanced Guard Time
al-VRC	allowable Packet loss and Variable Rate Class
AMI	ANCH MCS Indicator
AMT	Advanced MIMO Type
AMR	ANCH MCS Request
ANCH	Anchor Channel
ANDI	Advanced New Data Indicator
ATCCH	Advanced Timing Correct Channel
ATPMN	Advanced Transmission Power Margin Notification
AUANCH	Advanced Uplink ANCH
AUEDCH	Advanced Uplink EDCH
BCCH	Broadcast Control Channel
BER	Bit Error Rate
BI	Bandwidth Indication
BPSK	Binary Phase Shift Keying
BS	Base Station
BSID	BS Identification
CB	Code block
CC	Convolutional Code
CCH	Common Channel
CCCH	Common Control Channel
CC-HARQ	Chase Combining -HARQ
CCI	Common Control Information
CDCH	CSCH Data Channel
CI	Channel Identifier
CQI	Channel Quality Indicator
CRC	Cyclic Redundancy Code
CSCH	Circuit Switching Channel
CSI	Channel State Information

DSI	Downlink Scheduling Index
DSS	Downlink Special Slot
DTX	Discontinuous Transmission
DL	DownLink
ECBW	Effective Channel Bandwidth
ECCH	EXCH Control Channel
EDCH	EXCH Data Channel
EMB	Eigen Mode Based
EMI	EMB-MIMO MCS Indicator
EPRP	Engergy Per Resource Point
EXCH	Extra Channel
FCID	Function Channel ID
FER	Frame Error Rate
FFT	Fast Fourier Transform
FM-Mode	Fast access channel based on MAP -Mode
FRMR	Frame Reject
GBW	Guard Bandwidth
GI	Guard Interval
HARQ	Hybrid Automatic Repeat Request
HC	HARQ Cancel
HLR	Home Location Register
IBI	Inter-Block Interference
ICCH	Individual Control Channel
ICH	Individual Channel
ICI	Inter-Carrier Interference
IFFT	Inverse Fast Fourier Transform
IL	Information Link bit
IP	Internet Protocol
IR-HARQ	Incremental Redundancy -HARQ
ISI	Inter-Symbol Interference
LAC	Leave Alone Class
LCH	Link Channel
LCCH	Logical Common Channel
LD-BE	Low - Delay Best Effort Class
LDPC	Low Density Parity Check
LPF	Low Pass Filter
LSB	Least Significant Bit
MAC	Media Access Control
MCS	Modulation and Coding Scheme
MI	MCS Indicator
MIMO	Multiple Input Multiple Output
MM	Mobility Management
MR	MCS Request
MS	Mobile Station
MSB	Most Significant Bit
MSID	MS Identification

MT	MIMO Type
NACK	Negative ACK
NCL	Neighbour Cell List
NGN	Next Generation Network
nl-VRC	no Packet loss and Variable Rate Class
OFDMA	Orthogonal Frequency Division Multiple Access
PAD	Padding
PAPR	Peak to Average Power Ratio
PC	Power Control
PCH	Paging Channel
PDU	Protocol Data Unit
PHY	Physical layer
PLC	Private Line Class
PN	Pseudo Noise
PRU	Physical Resource Unit
PSP	Primary Synchronization Pilot
QAM	Quadrature Amplitude Modulation
QCS	QoS Control Session
QoS	Quality of Service
QPSK	Quadrature Phase Shift Keying
QS-Mode	high Quality channel based on carrier Sensing -Mode
RAN	Radio Access Network
RB	Radio Bearer
RCH	Request Channel
REJ	Reject
RIL	Remaining Information Length indication bit
RNR	Receive Not Ready
RP	Resource Point
RR	Receive Ready
RROF	Root Roll-Off Filter
RS	Relay Station
RSSI	Received Signal Strength Indicator/Indication
RT	Radio frequency Transmission management
RU	Resource Unit
SBW	System Bandwidth
SC	Single Carrier
SCCH	Signaling Control Channel
SC-FDMA	Single Carrier Frequency Division Multiple Access
SCH	Subchannel
SD	Shift Direction
SDMA	Space Division Multiple Access
SFBC	Space Frequency Block Coding
SINR	Signal to Interference and Noise Ratio
SI	Stream Indication
SISO	Single Input Single Output
SM	Spatial Multiplexing

SR	Selective Repeat
SR	Stream Request
SREJ	Selective Reject
SSP	Secondary Synchronization Pilot
STBC	Space Time Block Coding
SVD	Singular Value Decomposition
TB	Transport block
TCCH	Timing Correct Channel
TCH	Traffic Channel
TDD	Time Division Duplex
TDMA	Time Division Multiple Access
UL	UpLink
USS	Uplink Special Slot
V	Validity
VoIP	Voice over IP
VRC	Variable Rate Class
VRU	Virtual Resource Unit
XGP	eXtended Global Platform / neXt Genernation PHS

Chapter 0 Scope and Introduction

Scope

This standard is being established principally for “eXtended Global Platform / neXt Genernation PHS (XGP)”. In order to ensure the fairness and the openness among all parties involved in developing this system, the radio equipment manufacturers, telecommunications operators and the users were invited openly to the Standard Assembly so as to gain this standard with the total agreement of all parties involved in developing standard.
The scope of application of this standard covers the minimum requirements for the service and communication provided by this system.
This standard of XGP is promoted by the XGP Forum (formerly PHS MoU Group, PHS means Personal Handy phone System.), PHS MoU Group was established in 1995; for the purpose of expanding PHS service to all over the world.

Introduction

XGP is one of the future Broadband Wireless Access systems (BWA), and also a migration standard of Original PHS based on all-IP core network, which will realize the high speed data communication and large capacity data communication with mobile communication network. This “XGP standard” shows the developed future status of “Original PHS standard”. The description for this system will be added to “Original PHS standard” in order to develop “XGP standard”.
Original PHS is the standard of Association of Radio Industries and Business (ARIB), which has been standardized since 1993. The XGP standard is in compliance with ARIB standards too. However, to apply it as an international convention, the standard is also adopted by XGP Forum.
And being a global platform, the XGP standard is being established to ensure the applicability for worldwide deployment. Some specific requirements regarded for complying with regional regulations are therefore specified in “Annex X: Regional Condition”. XGP will support all the services that Original PHS is now supplying. It will also display further technical potentiality for subscribers to enjoy better services that might be requested by future PHS users.
Especially, the major expanded features of “XGP” which is aimed to realize are as follows.
- Expanded function variety and performance of Original PHS.
- Co-existence with Original PHS
- Higher capacity for traffic density
- Higher data transfer throughput
- Flexibility for cell mapping for various cell types
- Higher capability for mobility service

XGP is constructed on the same mobile communication structure as Original PHS. It is absolutely possible to operate Original PHS and XGP in the co-existing network and to supply both services within the same area.

The concept of co-existence situation is shown in Figure 0. The MS for Original PHS can make communication to Original PHS and Dual type Base Station (BS). The Mobile Station (MS) for XGP can make communication to XGP and Dual type BS. The Dual type MS can make communication to all kinds of BS. It is possible for both systems to be on service in the same network.

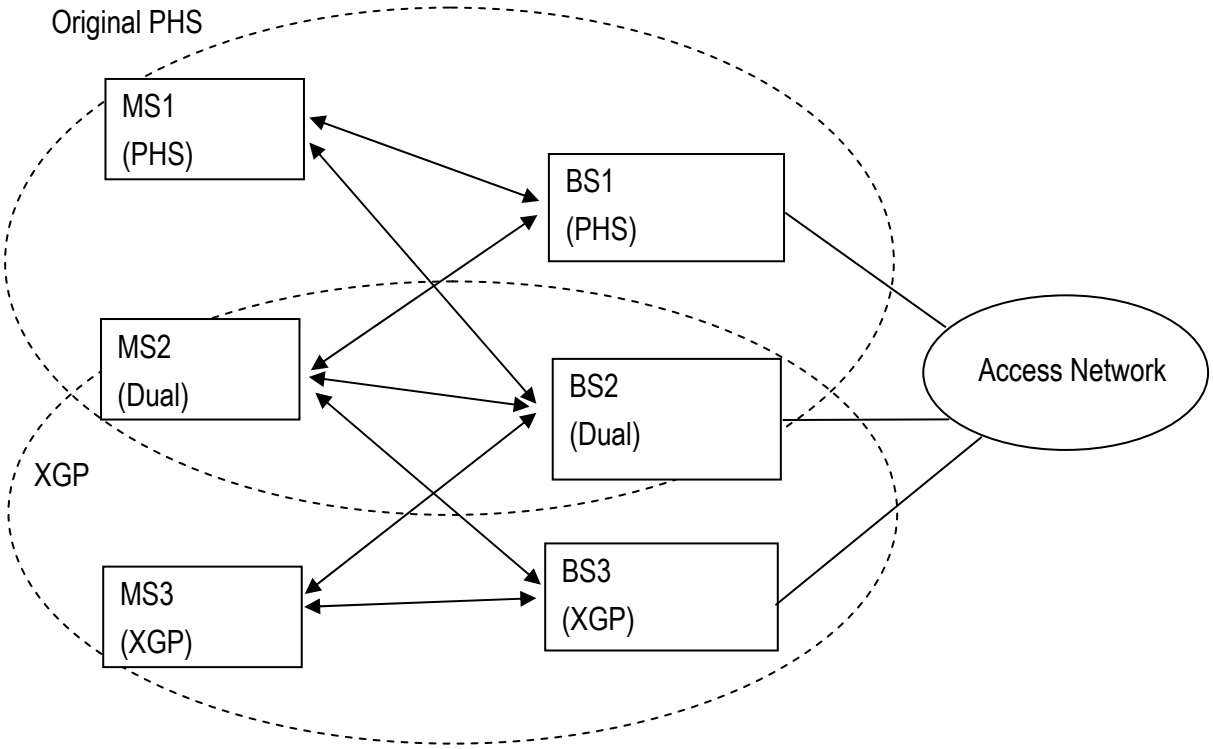

MS: Mobile Station
BS: Base Station
PHS: Original PHS
XGP: eXtended Global Platform
Dual: Hybrid of Original PHS and XGP

Figure 0 Concept of Co-existence with Original PHS

Original PHS specifications is compliance with the reference document 1-1.

Chapter 1 General

1.1 Overview

The standard is provided to specify the radio interface of communication systems that performs XGP.

1.2 Application Scope

XGP is composed of MS, BS and Relay Station (RS) (radio stations which relay communication between BS and MS) shown in Figure 1.1.
This standard specifies the radio interface between BS and MS, as shown in Figure 1.1, for XGP.

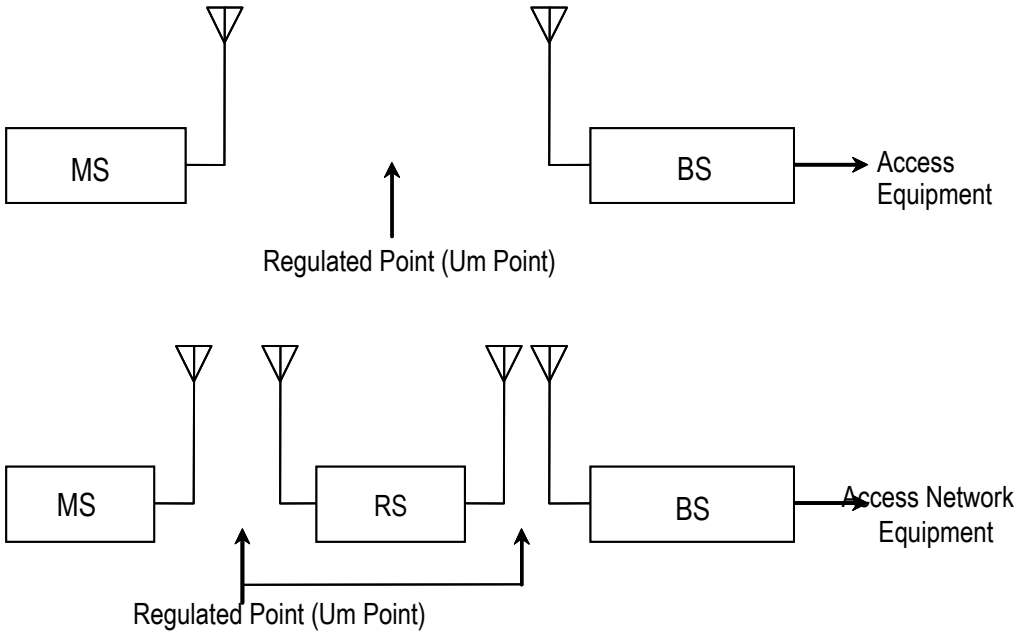

Figure 1.1 Structure of XGP

1.3 Mandatory and Optional

This standard includes both mandatory and optional descriptions.
The items necessary for system interface are defined as mandatory, and the items that depend on the manufacture are defined as optional.

1.4 Public Mode and Private Mode

Original PHS takes both service forms in public mode and in private mode. Because Original PHS concept is that it is utilized both in public system such as office extension line and in private system such as home circuit, XGP will have the same function of public mode and private mode.
The standard of private mode will be defined in the future.

Chapter 2 System Overview

2.1 System Structure

XGP consists of MS, BS and relay station which relays communications between BS and MS (hereinafter, referred to as RS).

2.1.1 Mobile Station (MS)

A mobile station, or a subscriber communication terminal, is used to make mobile radio communication to either mobile station or base station.

A mobile station consists of radio equipment with antenna, transmitter and receiver; interface to external equipments, voice encoding equipment, control equipment, and a sending/receiving handset etc.
In addition, the terminal, such as personal computer, can be connected to the MS if needed.

2.1.2 Base Station (BS)

A base station carries out mobile radio communication with mobile stations.

A base station consists of radio equipment with antenna, transmitter and receiver and control equipment.

2.1.3 Relay Station (RS)

A relay station relays mobile radio communication between BS and MS. The detail specification of RS will be defined in the future.

Counterpart of relay station to BS or MS consists of radio equipment with antenna, transmitter and receiver and control equipment.

2.2 Interface Definition

There is “Um” interface point for XGP, as shown in Figure 2.1.

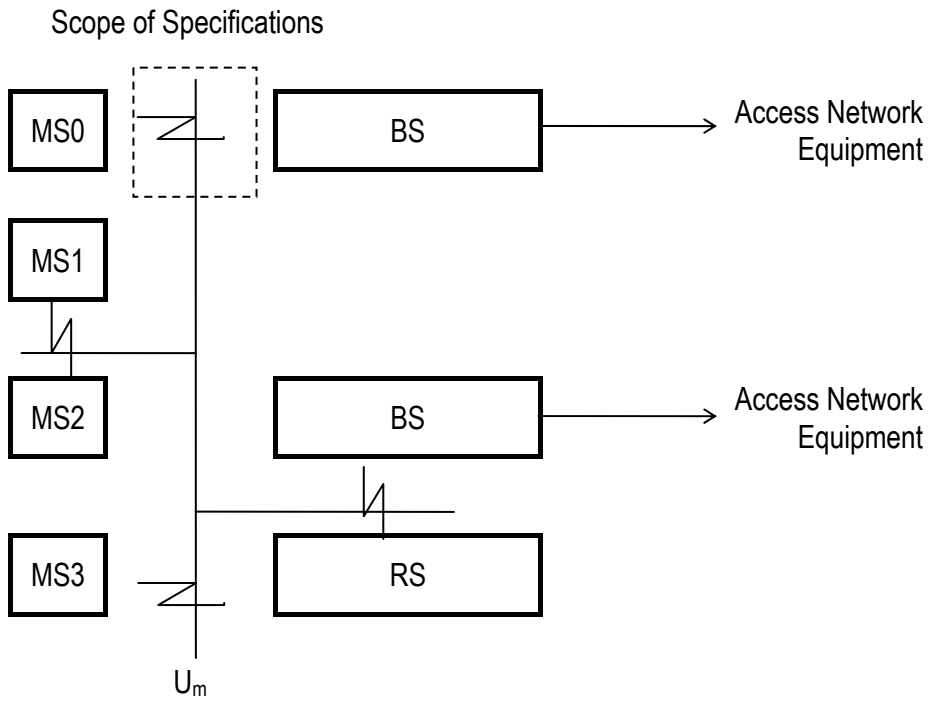

- Um Point : Interface point between MS and BS, interface point between RS and BS or MS, or interface point between MS and MS.

- MS0, MS1, MS2, MS3 : MS, including integrated man/machine interface with terminals etc.

Figure 2.1 Interface Points

2.3 Frequency Structure

Figure 2.2 shows relation among system bandwidth, effective channel bandwidth and guard bandwidth.
See more details in the following sections.

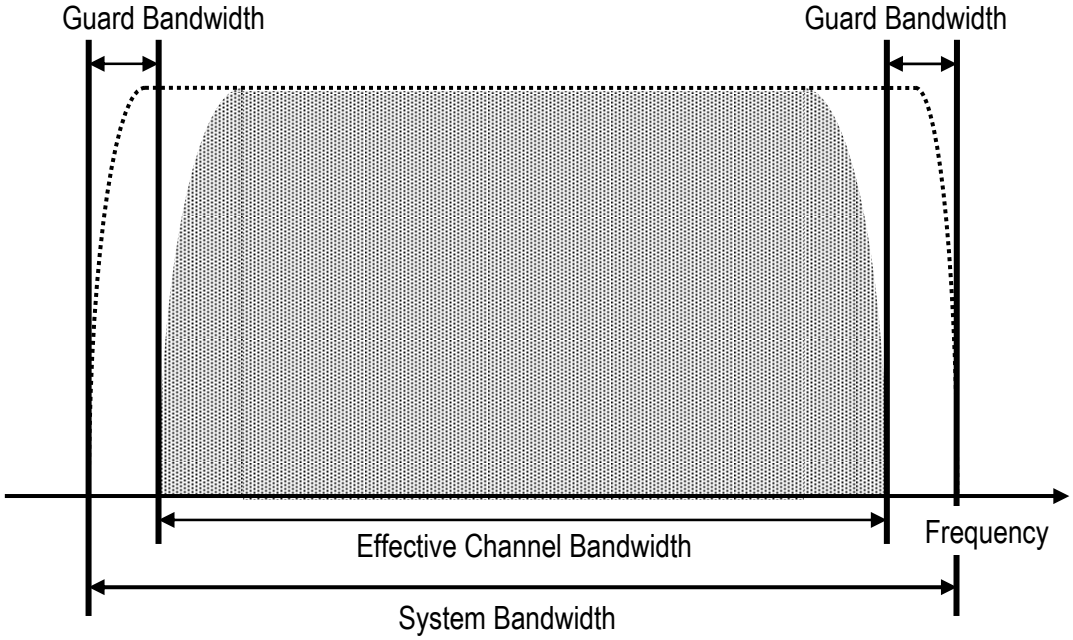

Figure 2.2 Frequency Structure

2.3.1 System Bandwidth (SBW)

System bandwidth is defined as total bandwidth including guard bandwidth and effective channel bandwidth and can be chosen from 1.25MHz, 2.5 MHz, 5 MHz, 10 MHz, 20MHz, 22.5MHz, 25MHz and 30 MHz.

2.3.2 Effective Channel Bandwidth (ECBW)

Effective channel bandwidth is defined as the bandwidth excluding guard bandwidth from system bandwidth. One or more users can exist in this bandwidth.

2.3.3 Guard Bandwidth (GBW)

Guard bandwidth is defined as the bandwidth to prevent interference into/from the adjacent system.
The structure in frequency domain for XGP is shown in Figure 2.2. Half of GBW is set to each side of frequency that is either lower or higher than ECBW.

2.3.4 Frequency Structure Parameters

Summary of actual values which is explained in Section 2.3 is shown in Table 2.1.

Table 2.1 Frequency Structure Parameters

System Bandwidth [MHz]		1.25	2.5	5		10		20		
Effective Channel Bandwidth [MHz]		0.9	1.8	3.6	4.5	8.1	9	16.2	17.1	18
Guard Bandwidth [MHz]		0.35	0.7	1.4	0.5	1.9	1	3.8	2.9	2
Frequency Division Multiple Access Method	Downlink (DL)	OFDMA								
	Uplink (UL)	OFDMA/SC-FDMA								

System Bandwidth [MHz]		22.5	25		30			
Effective Channel Bandwidth [MHz]		19.8	21.6	22.5	24.3	25.2	26.1	27
Guard Bandwidth [MHz]		2.7	3.4	2.5	5.7	4.8	3.9	3
Frequency Division Multiple Access Method	Downlink (DL)	OFDMA						
	Uplink (UL)	OFDMA/SC-FDMA						

2.4 Access Method

The access method of DL for XGP is OFDMA/TDMA-TDD.
The access method of UL for XGP is OFDMA/TDMA-TDD or SC-FDMA/TDMA-TDD.
TDD frame period is 2.5ms, 5 ms and 10ms.
The ratio between transmission and the reception slots are variable and their combination are repeated.
Each slot time is 625 us and TDMA access, and is operated by single carrier for Original PHS. XGP has the same frame format as Original PHS, and adopts the OFDMA for frequency division multiple access.

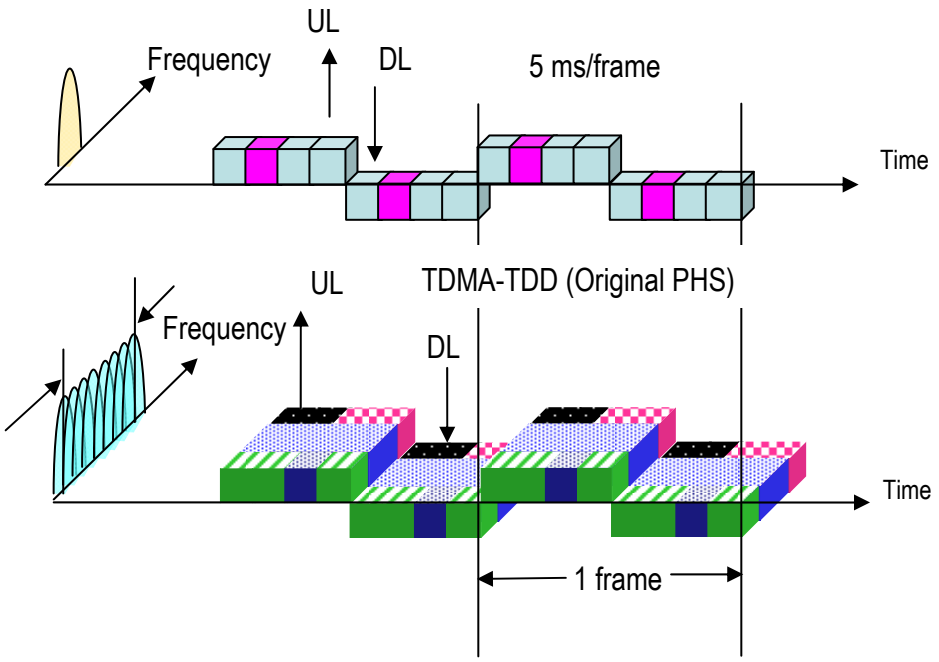

Figure 2.3 OFDMA/SC-FDMA/TDMA-TDD (XGP) in case of 5ms frame and UL/DL equal ratio

2.4.1 Transmission Method

The basic configurations for XGP are shown in Table 2.2.

Table 2.2 Basic Configuration of XGP

Basic Configuration	Contents
Duplex Method	TDD
DL Access Method	OFDMA/TDMA
UL Access Method	OFDMA, SC-FDMA/TDMA
TDMA Frame Period	2.5, 5, 10 ms
Sub-carrier Spacing	10.94kHz,12.5 kHz,15 kHz, 37.5 kHz

Number of Slots in One Frame	The number of slot is adopted 4, 8 and 16 slots per 1 frame and the structure is symmetly or asymmetry. - 4 slots : Both of transmission and reception slots are between 1 to 3. - 8 slots : Both of transmission and reception slots are between 1 to 7. - 16 slots : Both of transmission and reception slots are between 2 to 14.
Number of Subchannels	-1 subchannel in 1.25 MHz system bandwidth -2 subchannels in 2.5 MHz system bandwidth -4 subchannels in 5 MHz system bandwidth -9 subchannels or 10 subchannels in 10 MHz system bandwidth -18 subchannels, 19 subchannels or 20 subchannels in 20 MHz system bandwidth -22 subchannels in 22.5 MHz system bandwidth -24 subchannels or 25 subchannels in 25 MHz system bandwidth -27 subchannels, 28 subchannels, 29 subchannels or 30 subchannels in 30 MHz system bandwidth

Refer to Sections 2.4.2, 2.4.2.1 and 2.4.2.2 for TDMA slot and TDMA frame.
Refer to Section 2.4.3.2 for subchannel.

2.4.2 TDMA (Time Division Multiple Access)

Figure 2.4 shows an example of TDMA slot arrangement in the light of appropriate sending/receiving slot separation in TDD transmission.

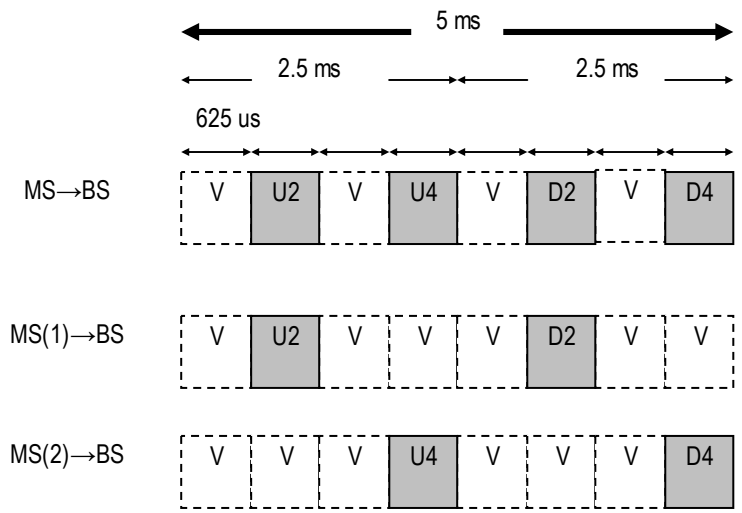

U: UL, D : DL, V : Vacant
Ui - Di : Corresponding UL / DL slot

Figure 2.4 TDMA Slot Arrangement in case of 5ms symmetrical frame

2.4.2.1 TDMA Slot

A slot is a minimum unit that composes TDMA, and its period is 625 us. This period is the same as Original PHS.

2.4.2.2 TDMA Frame

A frame is composed one of 4, 8 or 16 slots. A frame structure is symmetly or asymmetry depended on the ration between UL and DL. The structure should be calculated as follows.

$$1\,\text{frame} = 625\text{us} \times (\, N_{USL} + N_{DSL}\,)$$

$$\text{UL slot "}N_{USL}\text{": } 1 \le N_{USL} \le 14$$

$$\text{DL slot "}N_{DSL}\text{": } 1 \le N_{DSL} \le 14$$

$$\text{Total number of slot : } N_{USL} + N_{DSL} = 4,\ 8 \text{ or } 16$$

Transmission burst lengths for UL and DL are below.
UL : 625us×N_{USL} or under （1≤N_{USL}≤14）
DL : 625us×N_{DSL} or under （1≤N_{DSL}≤14）

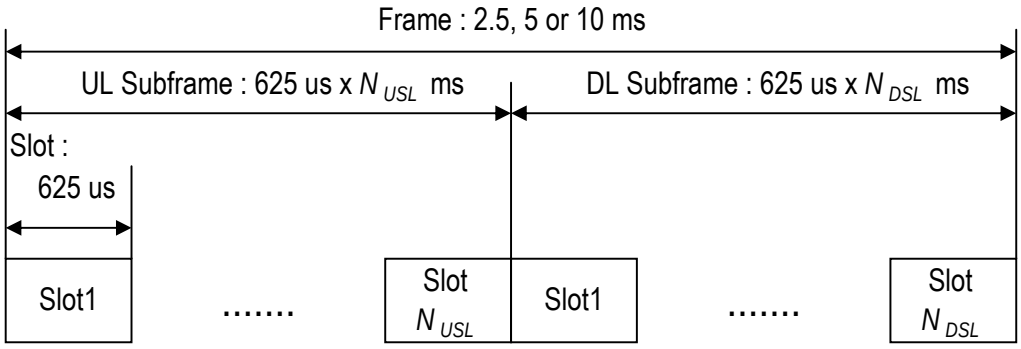

Figure 2.5 TDMA frame structure

Figure 2.5 shows the TDMA frame structure.
Example for 1 frame is composed 16 slots, N_{USL} is 4 slots and N_{DSL} is 12 slots, UL time per 1 frame is 2.5ms and DL's is 7.5ms.
Transmission burst lengths tolerance is less than or equal to +5us/+5us, and greater than or equal to -30us/-50us for BS/MS.

2.4.2.3 Mandatory TDMA frame structure

Both of MS and BS should be supported the following TDMA structure. And the other is optional
- Frame length : 5ms
- The number of UL slot "N_{USL}" : 4 slots
- The number of DL slot "N_{DSL}" : 4 slots

2.4.2.4 Limitation for expanded TDMA frame structure

Expanded frame structure as asymmetry, 2.5ms and 10 ms described in section 2.4.2.2 has a limitation as follows.
- Supported System Bandwidth is 1.25, 2.5, 5 and 10MHz.
- MIMO is not supported

More expansion will be specified in the future.

2.4.3 OFDMA (Orthogonal Frequency Division Multiple Access)
Figure 2.6 shows the OFDMA subchannel structure.

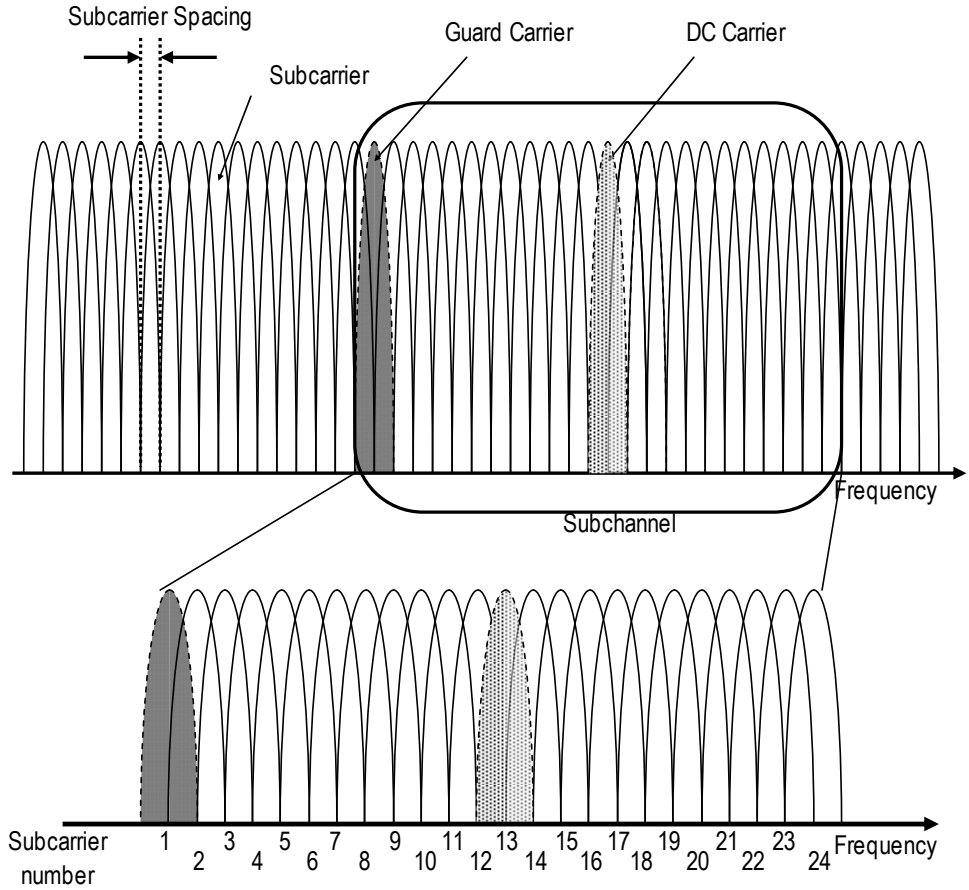

Figure 2.6 OFDMA Structure

Figure 2.7 shows an example of OFDMA subchannel arrangement for a specific sending/receiving slot in which multiple access is realized in frequency domain.

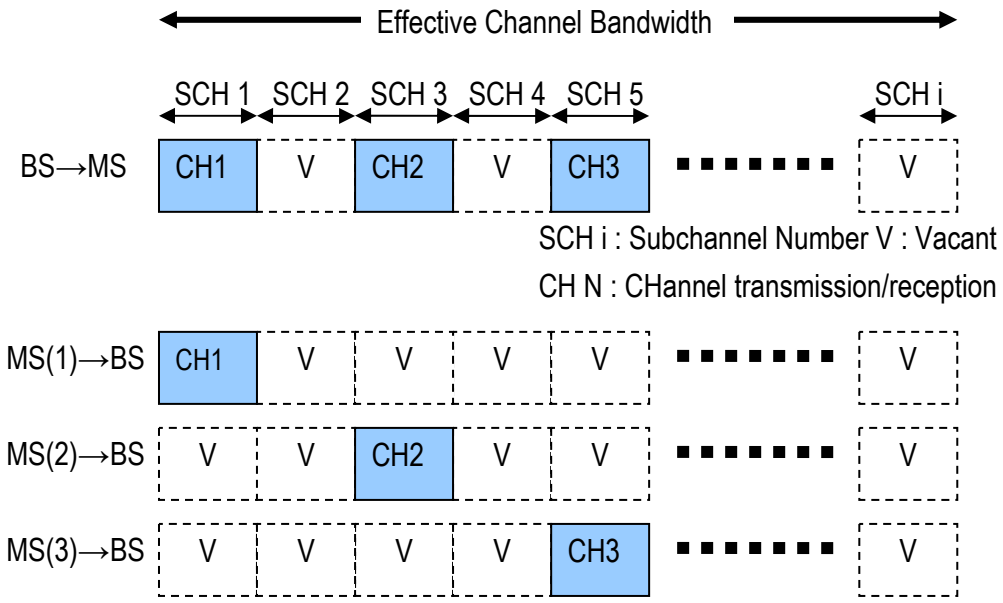

Figure 2.7 OFDMA Frequency Arrangement

2.4.3.1 Subcarrier Spacing

Subcarrier is defined as a “carrier” of OFDM in XGP.
In addition, plural subcarriers can be used as one block at the same time.
Subcarrier spacing is defined at 10.94kHz,12.5kHz,15kHz or 37.5 kHz as a space between neighboring subcarriers.

2.4.3.2 Subchannel (SCH)

Subchannel is defined as a group of subcarriers with 900 kHz bandwidth. Subchannel is composed of 24 subcarriers. The lowest frequency subcarrier included in one subchannel is defined as subcarrier No. 1. The highest frequency subcarrier included in one subchannel is defined as subcarrier No. 24. Figure 2.8 shows subchannel number in each ECBW.

SBW = 1.25 MHz, ECBW = 900 kHz

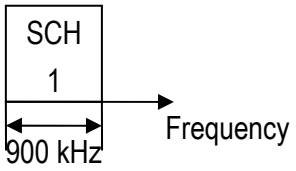

SBW = 2.5 MHz, ECBW = 1.8 MHz

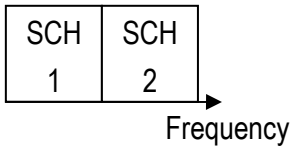

SBW = 5 MHz, ECBW = 3.6 MHz

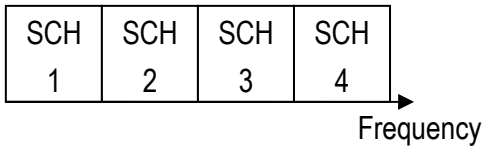

SBW = 10 MHz, ECBW = 8.1 MHz

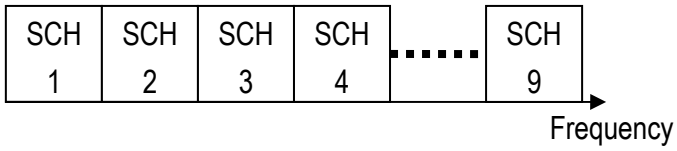

SBW = 10 MHz, ECBW = 9 MHz

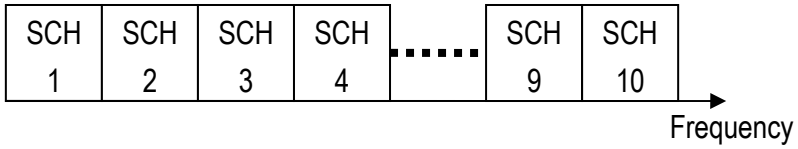

SBW = 20 MHz, ECBW = 16.2 MHz

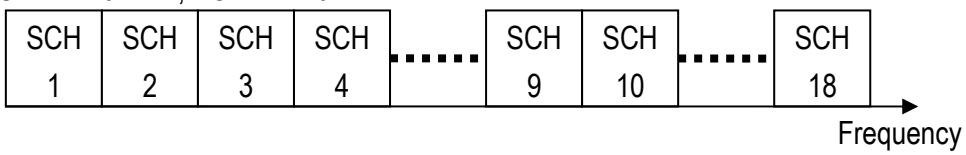

SBW = 20 MHz, ECBW = 17.1 MHz

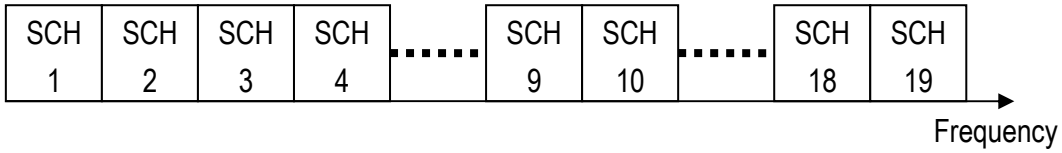

SBW = 20 MHz, ECBW = 18 MHz

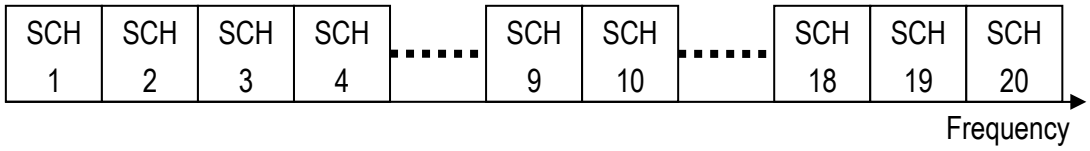

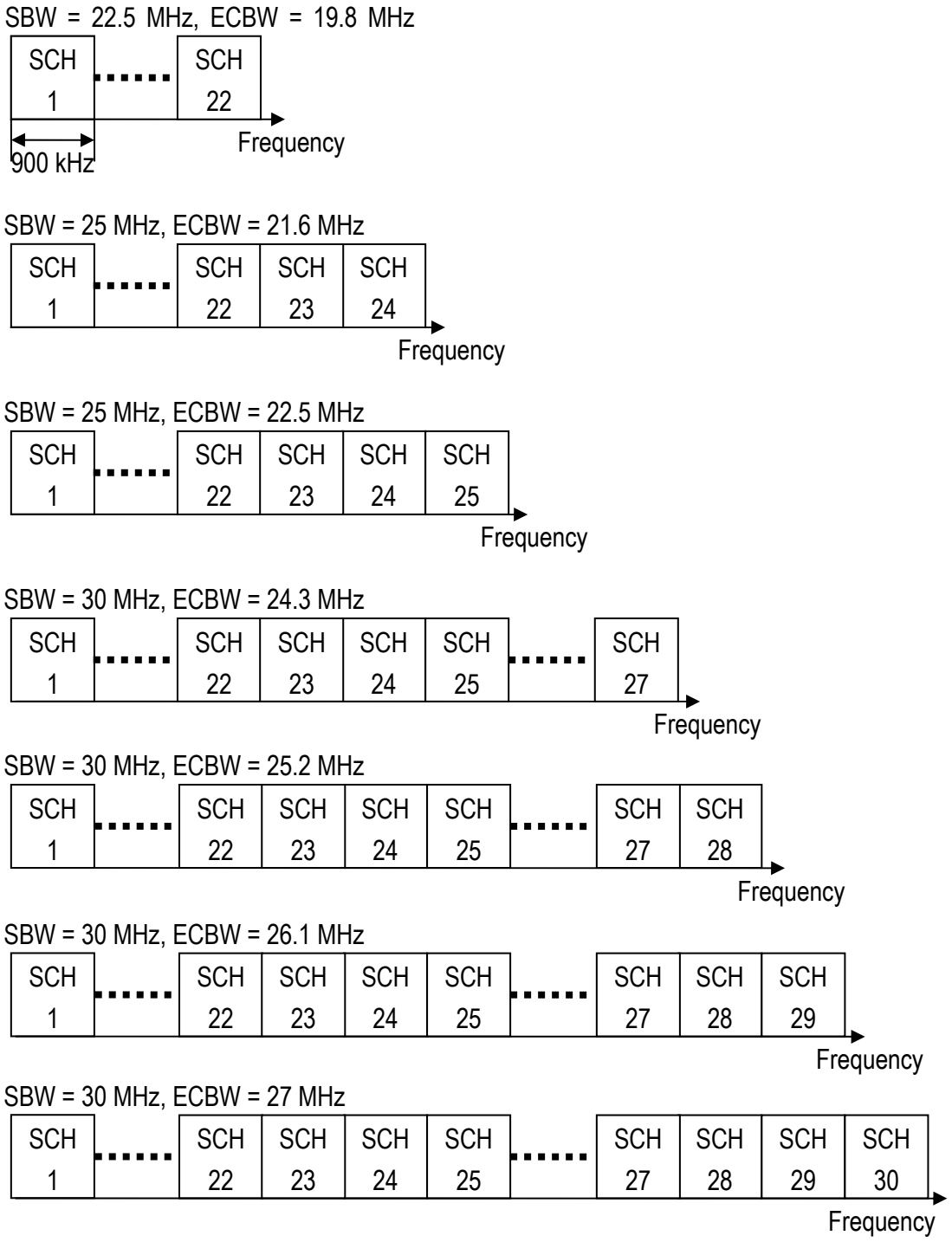

Figure 2.8 Definition of Subchannel Number in each ECBW

2.4.3.3 DC Carrier

DC carrier is not used for data transmission. When one subchannel is in use, DC carrier is set at subcarrier No. 13 as shown in Figure 2.6. The way to set DC carrier for the improvement of data throughput is described in Section 2.7.

2.4.3.4 Guard Carrier

To avoid the interference between subcarriers used by different MS, the guard carrier is not used for data transmission. Guard carrier insertion depends on the DL/UL subchannel format. When one subchannel is in use, guard carrier is set at subcarrier No. 1 as shown in Figure 2.6. The way to set guard carrier for the improvement of data throughput is described in Section 2.7.

2.4.4 OFDMA and TDMA

This XGP allows both frequency division multiple access and time division multiple access. Figure 2.9 shows the example of the combination of OFDMA/TDMA access. The detail of channel assignment is defined in 0.

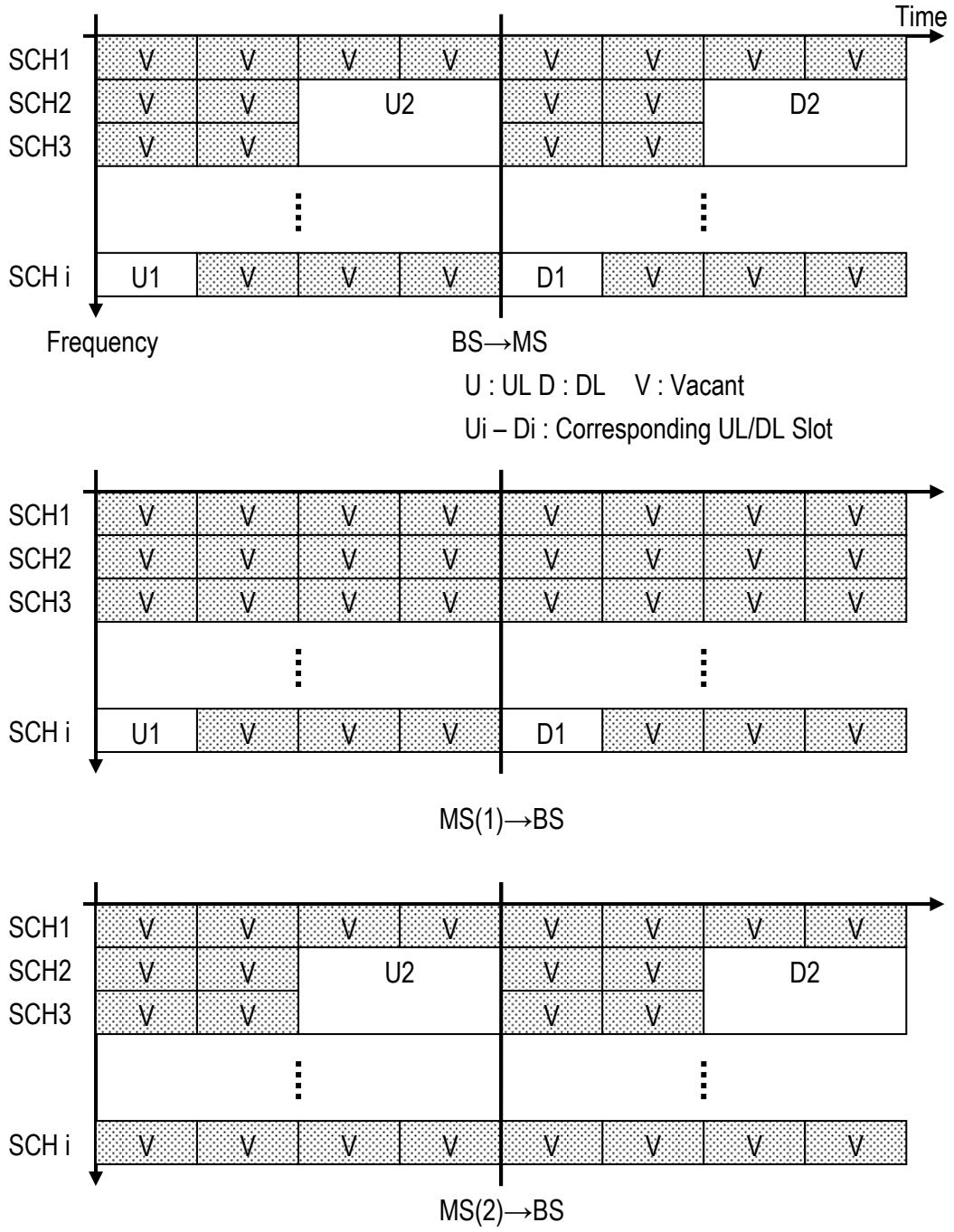

Figure 2.9 OFDMA/TDMA Slot Arrangement

2.4.5 Single Carrier Frequency Division Multiple Access (SC-FDMA) Mode Coexistence with OFDMA UL

XGP has SC-FDMA mode in UL, and allows the coexistence of SC-FDMA and OFDMA. Figure 2.10 shows the example of the combination of OFDMA and SC-FDMA UL access.

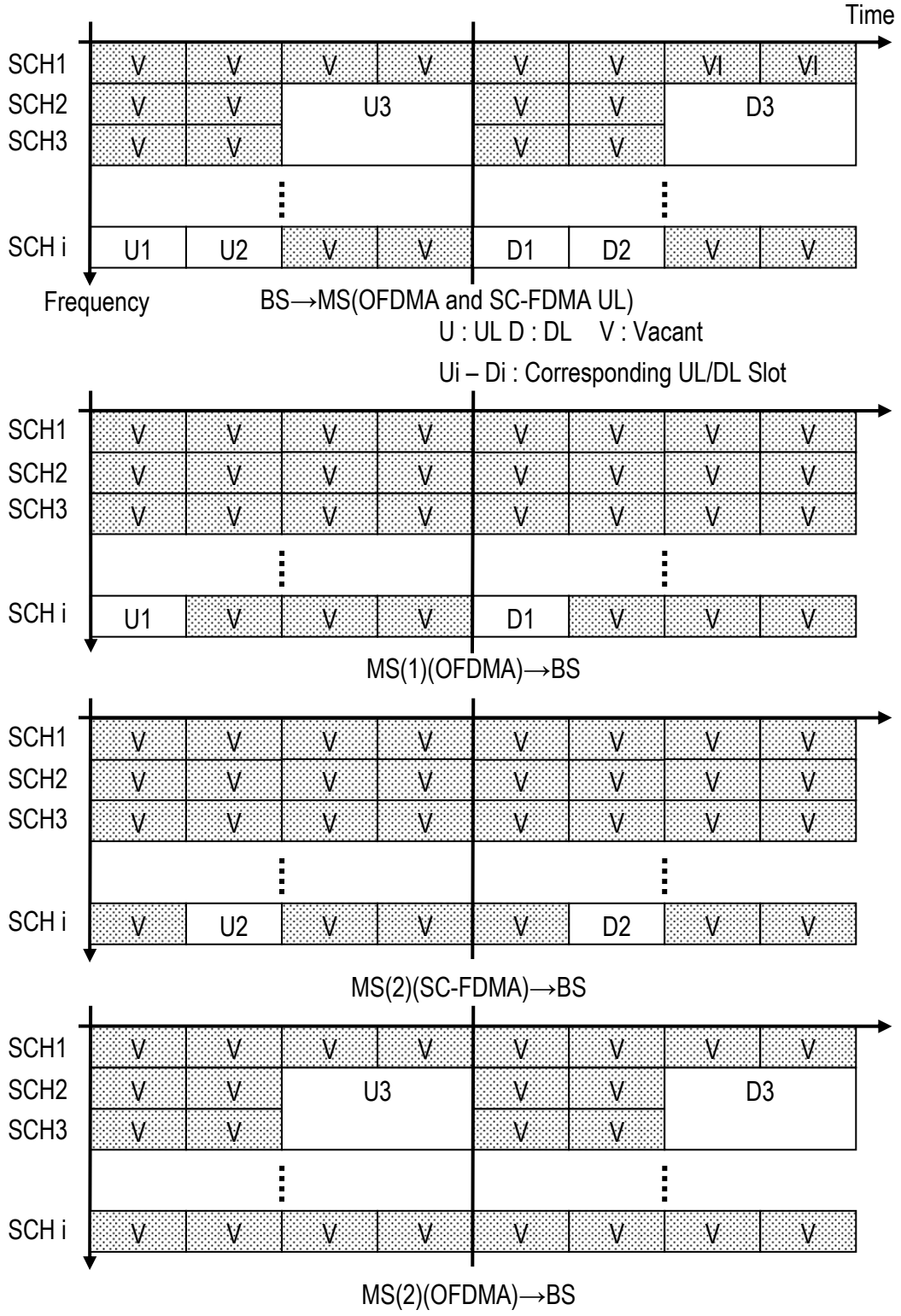

Figure 2.10 OFDMA and SC-FDMA Slot Arrangement

2.5 Physical Resource Unit (PRU)

The word PRU defined in XGP stands for a block divided by the time axis unit (TDMA slot 625 us) and the frequency axis unit (OFDM subchannel 900 kHz) for 37.5kHz Subcarrier Spacing. Figure 2.11 shows the correspondence between subchannel number and PRU number.

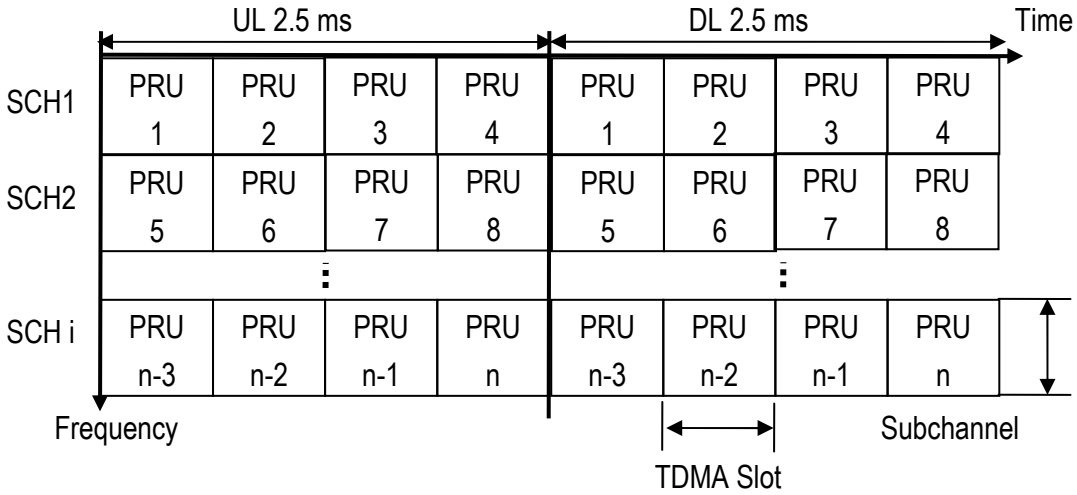

SCH i : Subchannel Number (i = 1~m, m=1,2,4,9,10,18,19,20,22,24,25,27,28,29, 30)

PRU n : PRU number (n = 4*m)

Figure 2.11 Correspondence between Subchannel Number and PRU Number in case of 5ms symmetric frame

Table 2.3 PRU

System Bandwidth [MHz]	1.25	2.5	5		10		20		
Effective Channel Bandwidth [MHz]	0.9	1.8	3.6	4.5	8.1	9	16.2	17.1	18
Subchannel Bandwidth [kHz]	900								
Number of Subchannels	1	2	4	-	9	10	18	19	20
Total Number of PRU (in case of 4 slots)	4	8	16	25	36	40	72	76	80
TDMA Slot Period [us]	625								

System Bandwidth [MHz]	22.5	25		30			
Effective Channel Bandwidth [MHz]	19.8	21.6	22.5	24.3	25.2	26.1	27
Subchannel Bandwidth [kHz]	900						
Number of Subchannels	22	24	25	27	28	29	30
Total Number of PRU	88	96	100	108	112	116	120
TDMA Slot Period [us]	625						

For 10.94kHz, 12.5kHz and 15kHz Subcarrier Spacing, PRU defined in XGP stands for a block divided by the frequency axis unit ($N_{\mathrm{sc}}^{\mathrm{RU}}$ consecutive subcarriers) and time axis unit ($N_{\mathrm{symb}}^{\mathrm{DL}}$ DL consecutive OFDM symbols or $N_{\mathrm{symb}}^{\mathrm{UL}}$ consecutive OFDM symbols). The parameters of PRU for 10.94kHz, 12.5kHz and 15kHz are given in Table 2.4.

Table 2.4 Physical Resource Units Parameters for △f =10.94kHz, 12.5kHz and 15kHz

Subcarrier Spacing Configuration	$N_{\mathrm{sc}}^{\mathrm{RU}}$	$N_{\mathrm{symb}}^{\mathrm{DL}}$ (or $N_{\mathrm{symb}}^{\mathrm{UL}}$)
10.94 kHz	18	6
12.5 kHz	12	6
15 KHz	12	7

A virtual resource unit is of the same size as a physical resource unit. Two types of virtual resource units are defined:

- Virtual resource units of localized type
- Virtual resource units of distributed type

For each type of virtual resource units, a pair of virtual resource units over two half-slots in a slot is assigned together by a single virtual resource unit number, n_{VRU} .

2.6 Frame Structure

Figure 2.12 shows the frame structure in each ECBW in case of 5ms symmetrical frame.

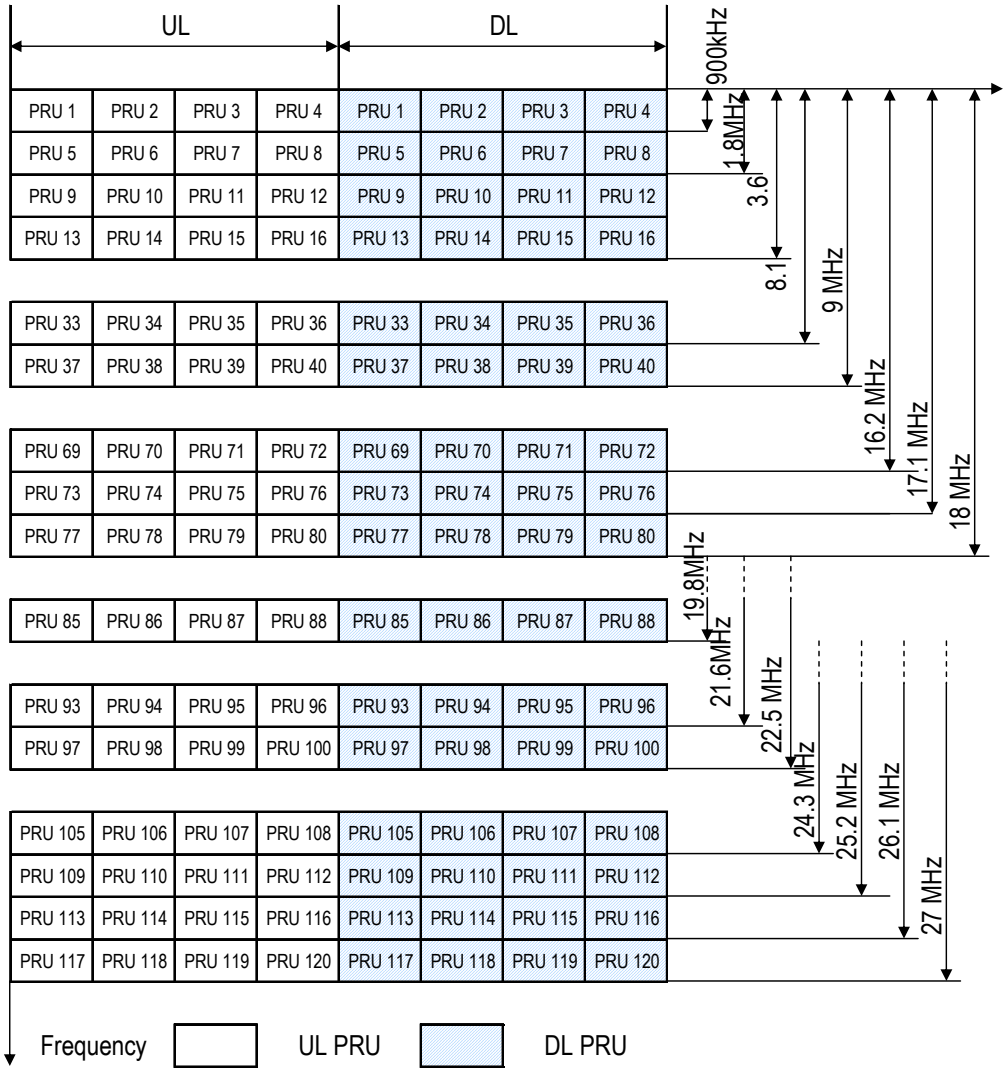

Figure 2.12 Frame Structure in case of 5ms symmetrical frame

Figure 2.13. shows the frame structure in case of 10ms frame. Each frame consists of two 5ms half-frames. Each half-frame consists of five slots of length 1ms. Each slot is defined as two half-slots of length 0.5ms. Downlink slot is reserved for downlink transmissions, uplink slot is reserved for uplink transmissions.

The special slot exists in both half-frames. Slot 1 and Slot 6 are reserved for special slot with the three fields DSS, AGT and USS. Two special slot configuration can be used according to different deployment scenario. For the first slot configuration, the length of DSS is $\frac{103}{480}ms$ and the length of USS is $\frac{137}{960}ms$. For the second slot configuration, the length of DSS is $\frac{343}{480}ms$ and the

length of USS is $\frac{137}{960} ms$.

There are four supported uplink-downlink configurations. Slot 0 and 5 and DSS are always reserved for downlink transmission. USS and the slot immediately following the special slot (Slot 2 and Slot 7) are always reserved for uplink transmission.For Uplink-downlink configuration 0, Slot 3,4,8 and 9 are configured for uplink transmission. For Uplink-downlink configuration 1, Slot 4 and 9 are configured for downlink transmission and slot 3 and 8 are configured for uplink transmission. For Uplink-downlink configuration 2, Slot 3,4,8 and 9 are configured for downlink transmission. For Uplink-downlink configuration 3, Slot 9 is configured for downlink transmission and slot 3,4 and 8 are configured for uplink transmission.

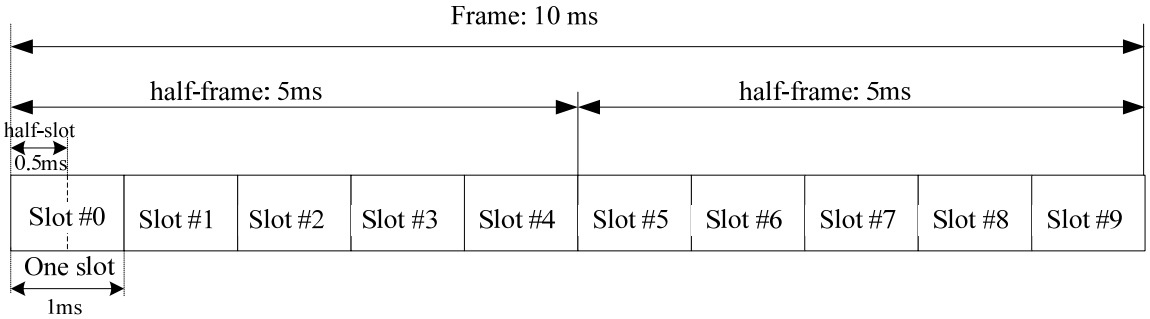

Figure 2.13. Frame structure for 10ms frame

Transmission burst lengths for UL and DL generally correspond to those of described in section 2.4.2.2 “TDMA Frame”.

e.g. Lengths of the configuration 1 are correspond to the lengths in case of “N_{USL}=4, N_{DSL}=4”.
Lengths of the configuration 2 (some patterns) are correspond to the lengths in cases of “N_{USL}=3, N_{DSL}=5 and N_{USL}=2, N_{DSL}=6”

2.7 Full Subcarrier Mode

Full subcarrier mode is optional and is used only in DL. When full subcarrier mode is used, all of DC carriers and guard carriers except central subcarrier are replaced with data symbols. Details are described in Appendix A.

2.8 Multiple Input and Multiple Output Control

Multiple Input and Multiple Output (MIMO), compared with Single Input and Single Output (SISO), is a technique to increase the data throughput without additional bandwidth. MIMO transfers multiple data streams in parallel by using multiple antennas at the transmitter and receiver. In addition, it has an effect to provide stable communications by the transmission diversity function.

2.9 Protocol Model

Protocol model is composed of link establishment phase, access establishment phase and access phase.

2.9.1 Link Establishment Phase

Link establishment phase is defined as the stage to use common channel (CCH) functions to select the protocol type required in the next phase.

2.9.2 Access Establishment Phase

Access establishment phase is defined as the stage to use functions which is obtained in the link establishment phase to select the protocol type required in the next phase.

2.9.3 Access Phase

In the access phase, it is possible to employ the optimum channel and the optimum protocol for each service.

2.9.4 Optional Protocol Model

2.9.4.1 User plane

Figure 2.14 shows the protocol stack for the user-plane, where MSL 1, MSL 2 and MSL 3 sublayers (terminated in BS on the network side) perform the functions listed for the user plane, e.g. header compression, ciphering, scheduling, ARQ and HARQ;

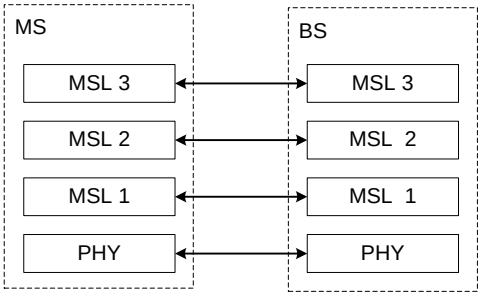

Figure 2.14 User-plane protocol stack

2.9.4.2 Control plane

The figure below shows the protocol stack for the control-plane, where:

- MSL 3 (terminated in BS on the network side) performs the functions, e.g. ciphering and integrity protection;
- MSL 2 and MSL 1 sublayers (terminated in BS on the network side) perform the same functions as for the user plane;
- Radio connection (terminated in BS on the network side) performs the function, e.g.:Broadcast, Paging, Radio connection management, Mobility functions, MS measurement reporting and control.

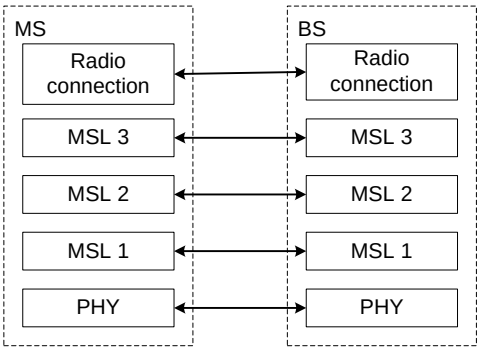

Figure 2.15 Control-plane protocol stack

2.10 Correspondence of PRU, Function Channel and Physical Channel

Figure 2.16 shows function channel classification.

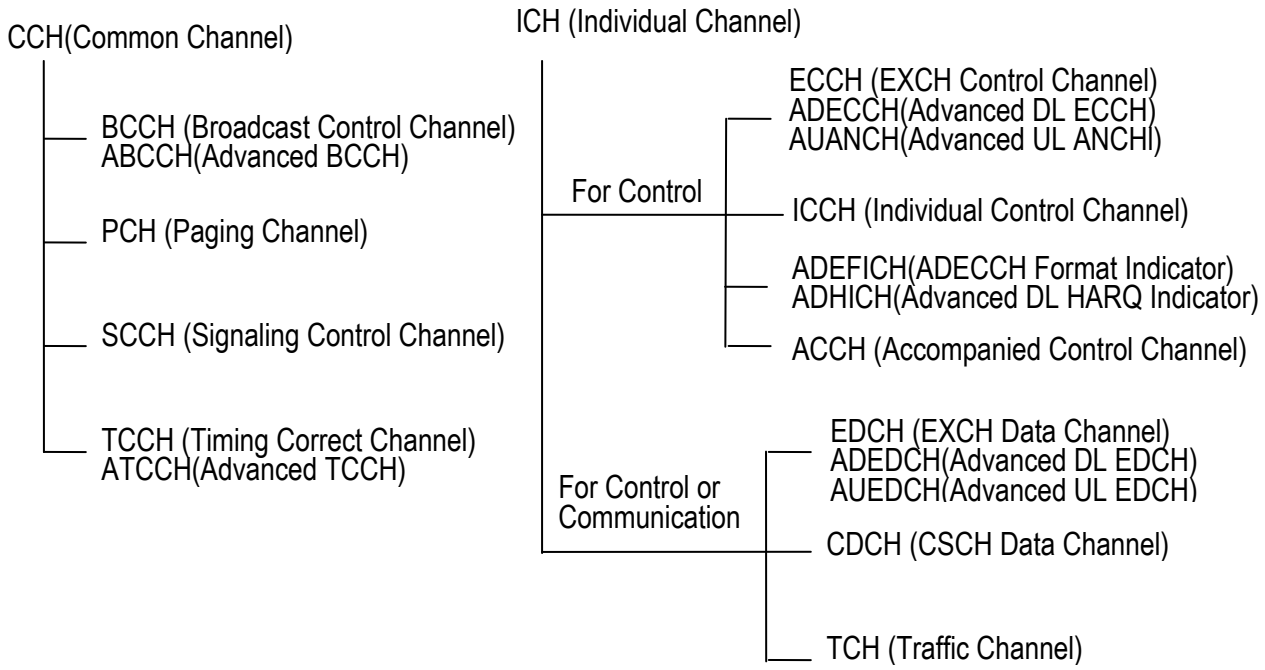

Figure 2.16 Function Channel Classification

Table 2.5 explains function channel.

Table 2.5 Function Channel Description

	Channel Name	Function Description
CCH	**BCCH**	BCCH is a DL channel to broadcast the control information from BS to MS.
	ABCCH	ABCCH is a optinal Advanced DL channel to broadcast the control information from BS to MS.
	PCH	PCH is a DL channel to inform the paging information from BS to MS.
	SCCH	SCCH is both DL and UL channel for LCH assignment. DL SCCH notifies allocation of an individual channel to MS. And, UL SCCH requests LCH re-assignment to BS.
	TCCH	TCCH is an UL channel to detect UL transmission timing. Also, MS requires LCH establishment using TCCH.
	ATCCH	ATCCH is an UL channel to detect and correct UL transmission timing

	Channel Name	Function Description
ICH	**ECCH**	UL/DL bidirectional control channel which put into ANCH. It has some information to control channel allocation, modulation method, transmission power and timing and others for EXCH.
	ADECCH	Advanced Downlink ECCH
	AUANCH	Advanced Uplink ANCH
	ADEFICH	Advanced Downlink ECCH Format Indicator Channel, used for indicating the region of ADECCH in XGP mode 2
	ADHICH	Advanced Downlink Hybrid-ARQ Indicator Channel, used for sending ACK/NACK of UL data
	ICCH	UL/DL bidirectional control channel which put into ANCH. It transmits the signaling message.
	ACCH	UL/DL bidirectional control channel which accompanies TCH in CSCH. It transmits the signaling message.
	EDCH	UL/DL bidirectional channel which put into EXCH. It transmits user traffic data or the signaling message.
	ADEDCH	DL channel transmits user traffic data or the signaling message.
	AUEDCH	UL channel transmits user traffic data or the signaling message.
	CDCH	UL/DL bidirectional channel which put into allocated CSCH. It transmits user traffic data or the signaling message.
	TCH	UL/DL bidirectional channel which put into CSCH. It transmits user traffic data.

Figure 2.17 shows the correspondence of between PHY PRU and function channel in each protocol phase.

PRU \ Protocol Phase		Link Establishment Phase	Access Establishment Phase	Access Phase
CCH	UL	SCCH TCCH		
	DL	BCCH PCH SCCH		
ICH			ICCH	ECCH ICCH ACCH EDCH CDCH TCH

Figure 2.17 Correspondence between PHY PRU and Function Channel in Each Protocol Phase

2.11 Service Description

XGP provides various wireless telecommunication services. There are not only bearer of voice but also packet data communication such as VoIP, Video-phone, Streaming and Multi-cast service. The services are based on a network constructed with IP etc, and providing packet transporter for air-interface.

2.12 Protocol Structure

The protocol structure of XGP is shown in
Figure 2.18. The protocol layer between MS and BS consists of PHY and MAC layer.
PHY layer controls physical wireless line between MS and BS. It defines the modulation method, physical frame format etc. The details are described in Chapter 3.
MAC layer controls link establishment, channel assignment, channel quality maintenance etc. The detail function is described in Chapter 4 and 5.
The upper network layer is based on IP protocols etc. This document complies with the specification of PHY and MAC layer between MS and BS.

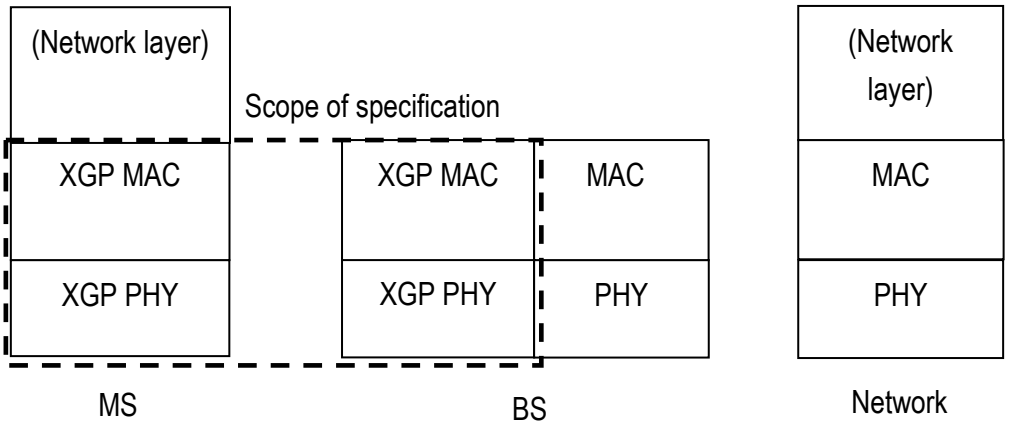

Figure 2.18 Protocol Stack for XGP

Chapter 3 Physical Channel Specification

3.1 Overview

This chapter describes the technical requirements applied to radio transmission facilities for XGP. The following physical (PHY) layer specification is designed to satisfy the functional requirements that have been defined for XGP. It incorporates many aspects of existing standards in order to ensure reliable operation in the targeted 1 GHz to 3 GHz frequency band. In addition, PHY layer was designed with a high degree of flexibility in order to provide operators in different regulatory domains with the ability to optimize system deployments with respect to cell planning, cost considerations, radio capabilities, offered services, and capacity requirements.

The DL PHY layer described in this chapter is based on Time Division Multiple Access (TDMA) and Orthogonal Frequency Division Multiple Access (OFDMA) modulation. The general condition of OFDM PHY layer is described in Section 3.2. The details of the DL PHY layer are described in Section 3.4.
The UL PHY layer described in this chapter is based on TDMA and OFDMA modulation or TDMA and Single-Carrier Frequency Division Multiple Access (SC-FDMA) modulation. UL PHY layer in compliance with this standard shall support at least either OFDMA or SC-FDMA. The general condition of SC PHY layer is described in Section 3.3. The detail of the UL OFDM PHY layer is described in Section 3.5. The details of the UL SC PHY layer are described in Section 3.6.

Physical channel is composed of two channels - Common Channel (CCH) and Individual Channel (ICH). CCH is composed of two channels – Common Control Channel (CCCH) and Timing Correct Channel (TCCH). ICH is composed of three channels - Anchor Channel (ANCH), Extra Channel (EXCH) and Circuit Switching Channel (CSCH). CCCH format is described in Sections 3.4.8.1.1, 3.5.6.1.1 and 3.6.7.1.1. TCCH format is described in Sections 3.5.6.1.2 and 3.6.7.1.2. ANCH is described in Sections 3.4.8.1.2, 3.5.6.2.1 and 3.6.7.2.1. EXCH format is described in Sections 3.4.8.1.3, 3.5.6.2.2 and 3.6.7.2.2. CSCH format is described in Sections 3.4.8.1.4, 3.5.7.2.3 and 3.6.7.2.3. The detail of ICH is described in Chapter 4. The detail of CCH is described in Chapter 5. Additional optional DL Physical channels are composed of: ADEDCH, ABCCH, ADEFICH, ADECCH and ADHICH. Additional optional UL Physical channel are composed of: AUEDCH, AUANCH and ATCCH.

Subcarrier spacing in frequency is dictated by the multipath characteristics of the channels in which XGP is designated to operate. As the channel propagation characteristics depend on the topography of the area and on the cell radius, the amount of carriers into which the channels are subdivided depends on the overall channel width and the carrier spacing. This PHY layer specification contains the programmability to deal with this range of applications.

Generally, several MIMO types have been already established. The effect achieved by the MIMO technology includes array gain, space diversity, spatial multiplexing, and interference reduction. In this document, the MIMO functions up to four streams is defined. The MIMO function relates to

STBC, SM and EMB-MIMO method.

3.2 The General Conditions for OFDM PHY Layer

3.2.1 OFDM Burst Structure

Figure 3.1 describes a frame structure for OFDM transmission method. As shown in the figure, OFDM burst consists of 19 OFDM symbols and OFDM burst length is defined as 573.33 us and 580 us in one slot of UL and DL, respectively. Guard time is the time between the OFDM burst and subsequent OFDM burst. And the total guard time length is defined as 51.67 us and 45 us in one slot. For OFDM, a modulated symbol is mapped and then is sent in each subcarrier. In one frame, several units of data are processed in symbols.

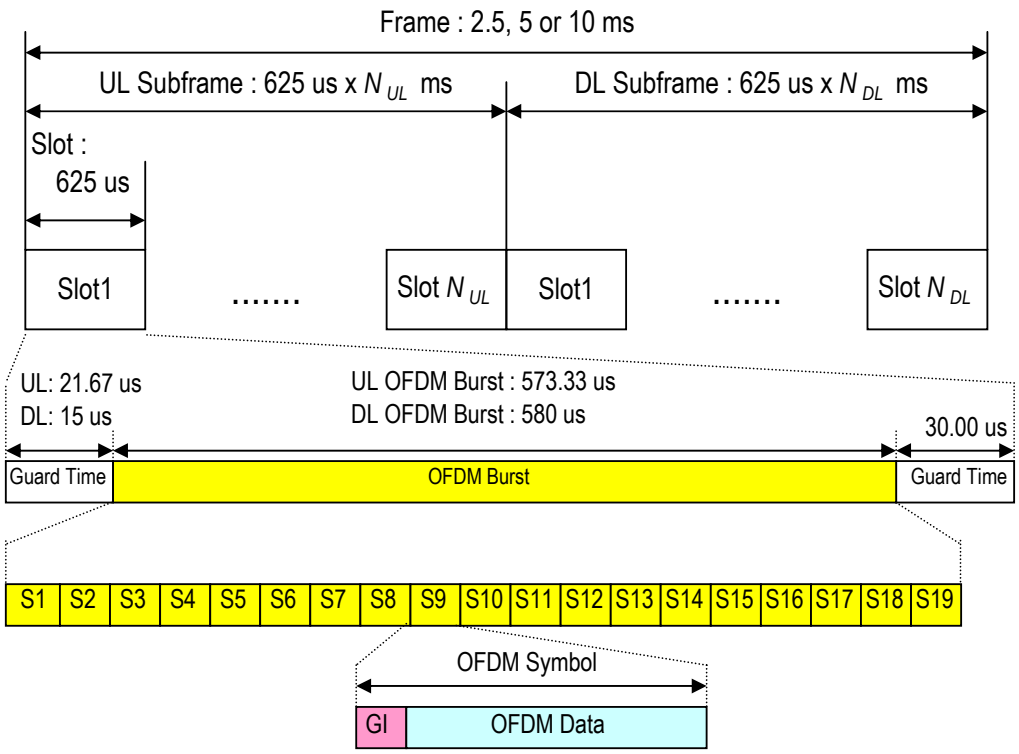

Figure 3.1 OFDM Symbols

Another optional downlink and uplink transmissions are organized into radio frames with 10ms duration. Each radio frame consists of two half-frames. Each half-frame consists of five slots. Each slot i is defined as two half-slots. Please refer to section 2.6.

3.2.2 OFDM Symbol Structure for 37.5 kHz subcarrier spacing

OFDM symbol is composed of OFDM data and Guard Interval (GI) as shown in Figure 3.2. OFDM data length is defined as the reciprocal of subcarrier spacing and is 26.67 us for 37.5 kHz

subcarrier spacing. GI is described in Section 3.2.2.1. There are two OFDM symbol lengths in one OFDM burst. The first OFDM symbol (S1) length is defined as 33.33 and 40 us for DL and UL, respectively. Other symbols (S2-S19) length is defined as 30 us.

3.2.2.1 Guard Interval

Guard Interval (GI) is defined as a time interval between OFDM symbols in order to avoid the interference caused by delay spread. GI is the cyclic extension of the OFDM symbols itself. In addition, the guard interval ratio is defined as the ratio of Data length and guard interval length. As shown in Figure 3.2, GI for the first OFDM symbol (S1) in UL and DL is defined as 6.66 us and 13.33 us, respectively. The GI ratio is defined as 1/4 and 1/2. For other symbols (S2-S19), GI is defined as 3.33 us and GI ratio is defined as 1/8 as shown in Figure 3.3.

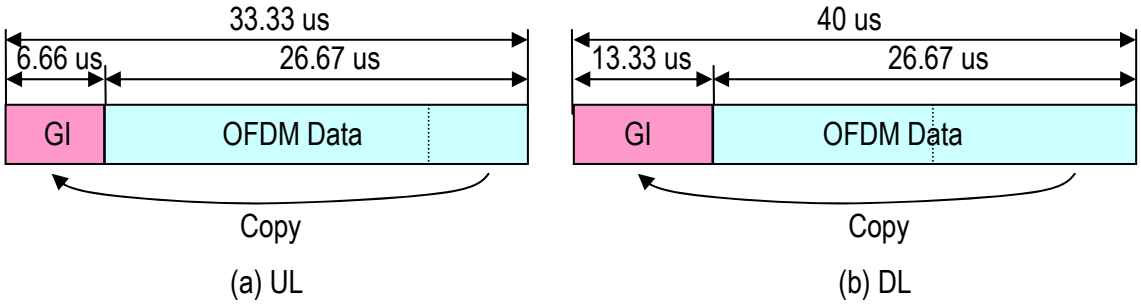

Figure 3.2 Guard Interval (S1)

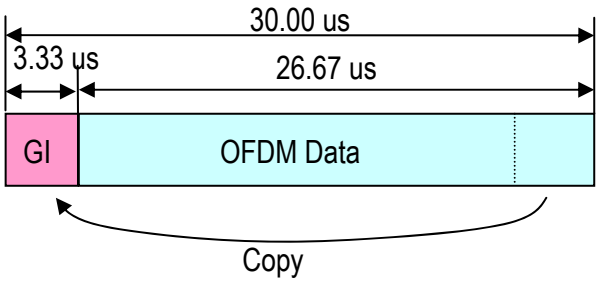

Figure 3.3 Guard Interval (S2-S19)

3.2.2.2 Windowing

Windowing may be used to alleviate discontinuity between symbols as shown in Figure 3.4. The windowing function *w(t)* depends on the value of the duration parameter. *Twin* is the windowing interval. *Tgi* and *Tdata* is guard interval duration and OFDM data duration. Figure 3.4. illustrates smoothed transitions by applying the windowing function shown as follows.

$$w(t)=\begin{cases} 0 & ,t<-\frac{T_{win}}{2} \\ 0.5+0.5\cos\left\{\frac{\pi}{T_{win}}\left(t+\frac{3T_{win}}{2}\right)\right\} & ,-\frac{T_{win}}{2}\le t<\frac{T_{win}}{2} \\ 1 & ,\frac{T_{win}}{2}\le t<T_{gi}+T_{data}-\frac{T_{win}}{2} \\ 0.5-0.5\cos\left\{\frac{\pi}{T_{win}}\left(t-T_{gi}-T_{data}-\frac{T_{win}}{2}\right)\right\} & ,T_{gi}+T_{data}-\frac{T_{win}}{2}\le t<T_{gi}+T_{data}+\frac{T_{win}}{2} \\ 0 & ,T_{gi}+T_{data}+\frac{T_{win}}{2}\le t \end{cases}$$

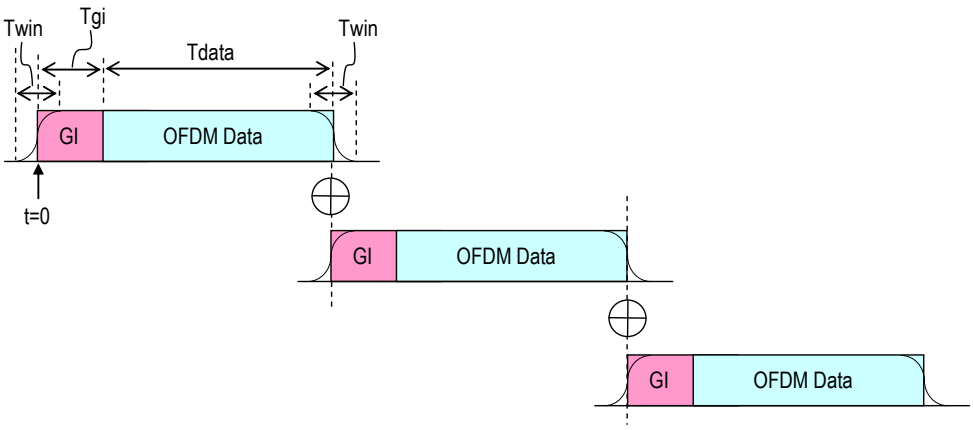

Figure 3.4 Windowing

3.2.3 OFDM Parameters for 37.5 kHz subcarrier spacing

OFDM parameters for XGP are shown in Table 3.1. One of 14 types, Type 1 to Type 14, can be chosen on slot-by-slot basis for MS and can be chosen on the system basis for BS.

Table 3.1 OFDM Parameters

Parameter	Type 1	Type 2	Type 3	Type 4	Type 5	Type 6	Type 7
System Bandwidth [MHz]	2.5	5	10	10	20	20	20
Effective Channel Bandwidth [MHz]	1.8	3.6	8.1	9.0	16.2	17.1	18.0

Used Subcarrier Number(*1)	48	96	216	240	432	456	480
Subcarrier Spacing [kHz]	37.5						
SCH Bandwidth [kHz]	900						
Guard Interval Length [us]	6.66 (UL S1), 13.33 (DL S1)						
	3.33 (S2-S19)						
OFDM Data Length [us]	26.67						
OFDM Symbol Length [us]	33.33 (UL S1), 40 (DL S1)						
	30 (S2-S19)						
Guard Interval Ratio	1/4 (UL S1) 1/2 (DL S1)						
	1/8 (S2-S19)						
Total Guard Time [us]	51.67 (21.67 + 30; UL), 45 (15 + 30; DL)						
OFDM Symbol Number per Subcarrier	19						
Windowing	(*2)						

Parameter	Type 8	Type 9	Type 10	Type 11	Type 12	Type 13	Type 14
System Bandwidth [MHz]	22.5	25	25	30	30	30	30
Effective Channel Bandwidth [MHz]	19.8	21.6	22.5	24.3	25.2	26.1	27.0
Used Subcarrier Number(*1)	528	576	600	648	672	696	720
Subcarrier Spacing [kHz]	37.5						
SCH Bandwidth [kHz]	900						
Guard Interval Length [us]	6.66 (UL S1), 13.33 (DL S1)						
	3.33 (S2-S19)						
OFDM Data Length [us]	26.67						
OFDM Symbol Length [us]	33.33 (UL S1), 40 (DL S1)						
	30 (S2-S19)						
Guard Interval Ratio	1/4 (UL S1) 1/2 (DL S1)						
	1/8 (S2-S19)						
Total Guard Time [us]	51.67 (21.67 + 30; UL), 45 (15 + 30; DL)						
OFDM Symbol Number per Subcarrier	19						
Windowing	(*2)						

(*1) Include DC carrier and Guard carrier

(*2) Refer to Section 3.2.2.2.

Although the length of 3.33 us, 6.66 us, 13.33 us, 26.67 us, 33.33 us, 21.67 us or 51.67 us is used in this document as either of GI length, OFDM data length, OFDM symbol length or guard time for notational convenience, the corresponding length is precisely represented by 10/3 us, 20/3 us, 40/3 us, 80/3 us, 100/3 us, 65/3 us or 155/3 us, respectively.

3.3 The General Conditions for SC PHY Layer

3.3.1 SC Burst Structure

Figure 3.5 describes a frame structure for SC transmission method. As shown in the figure, one SC burst consists of 19 SC blocks and SC burst length is defined as 573.33 us in one slot. Guard time is the time between the SC burst and subsequent SC burst. Total guard time length is defined as 51.67 us in one slot. For SC transmission method, modulated symbols are mapped into SC blocks.

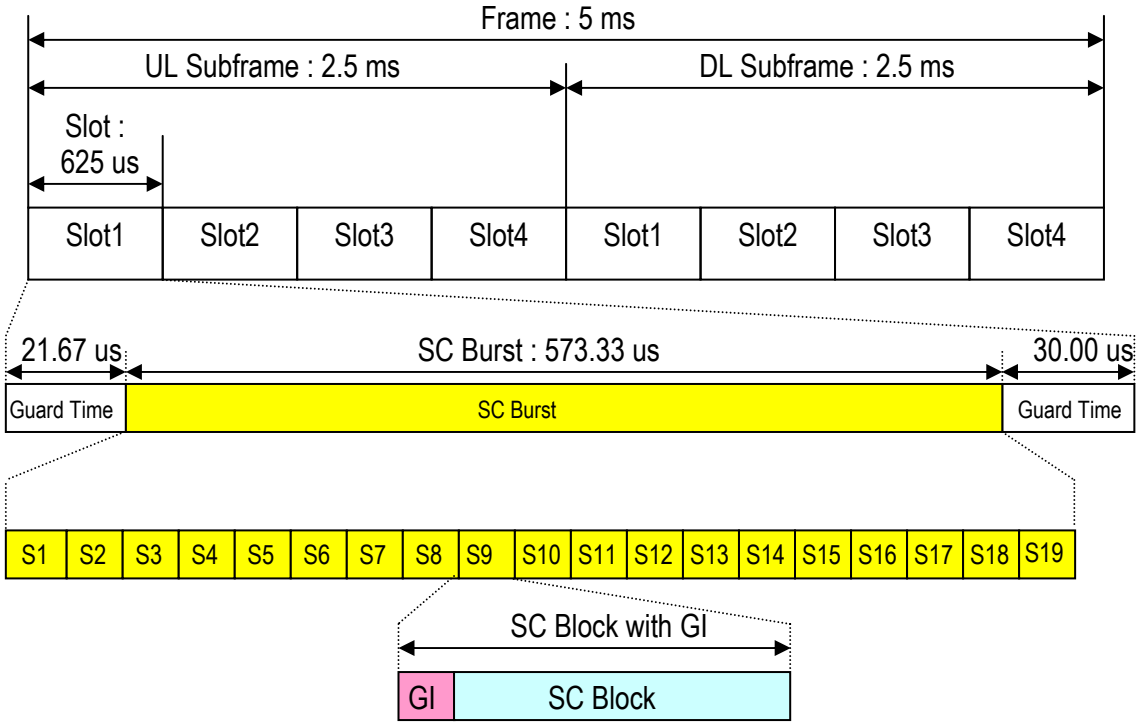

Figure 3.5 Structure of SC Burst for SC Transmission Method

3.3.2 SC Block Structure

SC block is composed of plural symbols. Guard Interval (GI) precedes the SC block as shown in Figure 3.6. SC block length is 26.67 us without GI. GI is described in Section 3.3.2.1. There are two GI lengths for SC block in one SC burst. The length of the first SC block with GI (S1) is defined as 33.33 us. The length of other SC blocks with GI (S2-S19) is defined as 30 us.

3.3.2.1 Guard Interval

GI is defined as a cyclic extension of the SC block in order to avoid the interference caused by delay spread. Guard interval ratio is defined as the ratio of SC block and guard interval length. As shown in Figure 3.6, GI length is defined as 6.66 us and GI ratio is defined as 1/4 for the first SC block (S1). For other SC blocks (S2-S19), GI length is defined as 3.33 us and GI ratio is defined as 1/8 as shown in Figure 3.7.

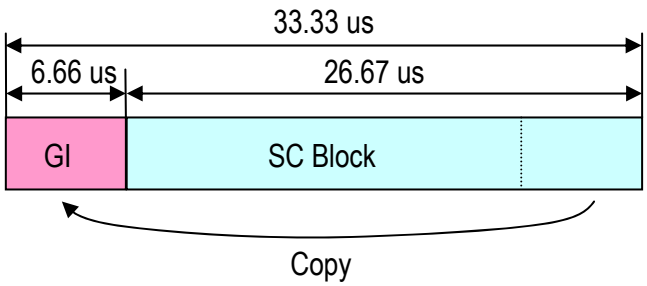

Figure 3.6 SC Block with Guard Interval (S1)

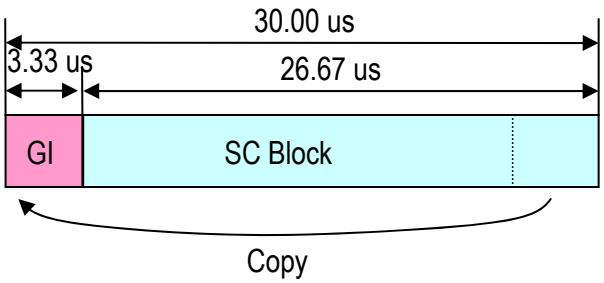

Figure 3.7 SC Block with Guard Interval (S2 – S19)

3.3.2.2 Pulse Shaping Filter

Pulse shaping filter should be applied to a SC burst at the transmitter. Type of pulse shaping filter should be Root Roll-Off Filter (RROF). Roll-off factor of RROF α is 0.45 for symbol rate of 0.6 Msps and 1.2 Msps, and is 0.36 for symbol rate of 2.4 Msps, 4.8 Msps and 9.6 Msps. Equation 3.1 shows the function of RROF pulse shaping filter.

$$P(t) = \frac{2\alpha}{\pi\sqrt{T_s}} \frac{\cos\left\{(1+\alpha)\pi\frac{t}{T_s}\right\} + \frac{T_s}{4\alpha t}\sin\left\{(1-\alpha)\pi\frac{t}{T_s}\right\}}{1-\left(\frac{4\alpha t}{T_s}\right)^2} \tag{3.1}$$

In this equation, Ts is the reciprocal of the symbol rate.

3.3.3 SC Parameters

SC Parameters for XGP are shown in Table 3.2. One of five types, Type 1 to Type 5, can be chosen on slot-by-slot basis. In this table, SC block size is defined as the number of symbols in a SC block. GI size is defined as the number of symbols in GI.
Center frequencies for Type 1 to Type 5 are defined by referring to the PRU structure defined in Section 3.4.8. A center frequency is represented as (m, n) indicating the n-th subcarrier (Fn) in the m-th PRU. The PRUs, which are occupied by SC signal, are incrementally numbered from lower frequency to higher frequency, and the initial value for m is 1. The center frequencies are (m,n)=(1,13) for type 1, (2,1) for type 2, (3,1) for type 3, (5,1) for type 4 and (9,1) for type 5.

Table 3.2 SC Parameters

Parameter	Type 1	Type 2	Type 3	Type 4	Type 5
Symbol Rate [Msps]	0.6	1.2	2.4	4.8	9.6
Bandwidth [MHz]	0.9	1.8	3.6	7.2	14.4
Number of PRUs	1	2	4	8	16
Number of CRC Units	1	1	2	4	8
SC Block Size [symbol]	16	32	64	128	256
GI Size [symbol]	4 (S1)	8 (S1)	16 (S1)	32 (S1)	64 (S1)
	2 (S2-S19)	4 (S2-S19)	8 (S2-S19)	16 (S2-S19)	32(S2-S19)
Guard Interval Length [us]	6.66 (S1)				
	3.33 (S2-S19)				
SC Block Length [us]	26.67				
Length of SC Block with GI [us]	33.33 (S1)				
	30 (S2-S19)				
Guard Interval Ratio	1/4 (S1)				
	1/8 (S2-S19)				
Total Guard Time [us]	51.67 (21.67 + 30)				
Pulse Shaping Filter	Root Roll-off Filter				
Roll-off Factor	0.45	0.45	0.36	0.36	0.36

Although the length of 3.33 us, 6.66 us, 26.67 us, 33.33 us, 21.67 us or 51.67 us is used in this document as either of GI length, SC block length, SC block with GI length or guard time for notational convenience, the corresponding length is precisely represented by 10/3 us, 20/3 us, 80/3 us, 100/3 us, 65/3 us or 155/3 us, respectively.

3.4 DL OFDM PHY Layer

Figure 3.8 describes a transmitter block diagram for OFDM transmission method.

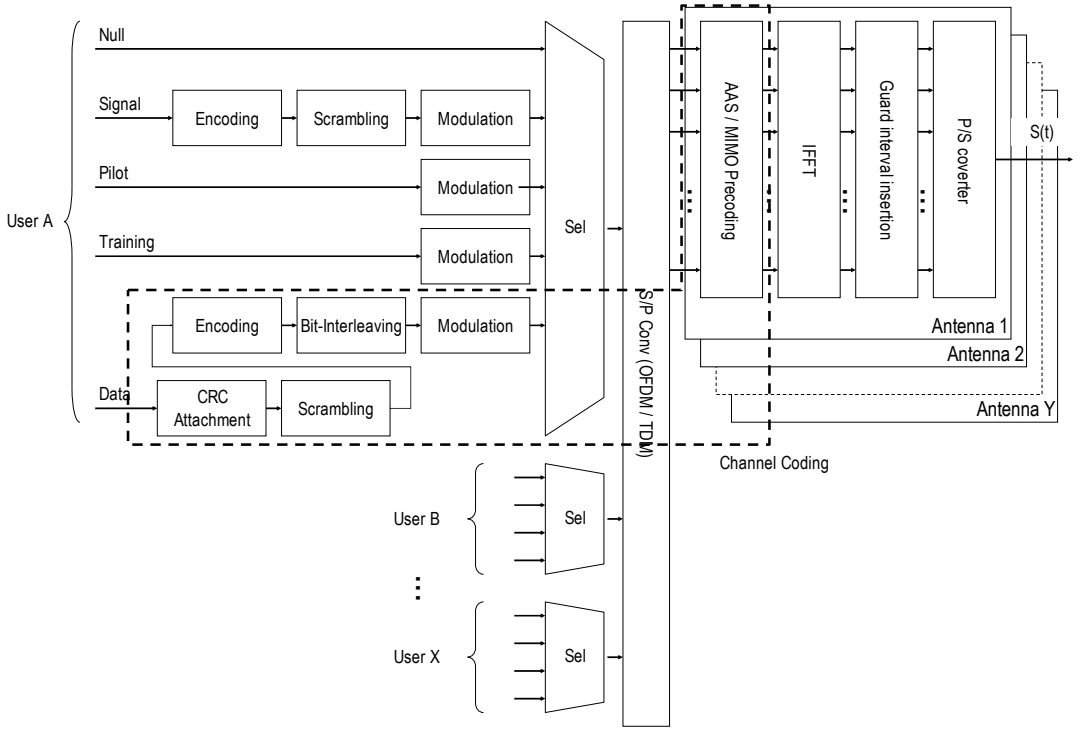

Figure 3.8 Transmitter Block Diagram

3.4.1 Channel Coding for PHY Frame

PHY frame consists of one or more Cyclic Redundancy Check (CRC) data unit(s). CRC-bits are first appended to the CRC data unit. Then tail-bits are appended to the CRC data unit with CRC-bits after performing scrambling. CRC unit is defined as the scrambled CRC data unit with CRC-bits and tail-bits. The size of CRC unit is described in Chapter 4. The CRC unit is encoded according to error-correcting code. Then, bit -interleaving is performed for error-correcting coded bits, and the output bits of bit-interleaving are converted to IQ signals by modulation method. Then, MIMO precoding is performed for IQ signals.
Figure 3.9 describes the channel coding block diagram for DL OFDM of Figure 3.8.

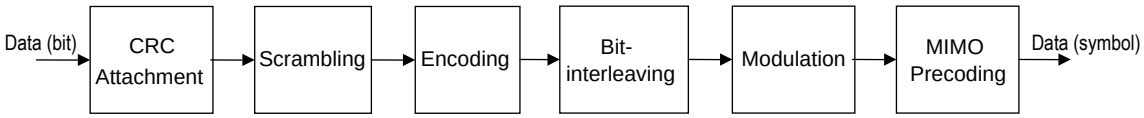

Figure 3.9 Channel Coding

Figure 3.10 describes an optional channel coding block diagram for DL transmission.

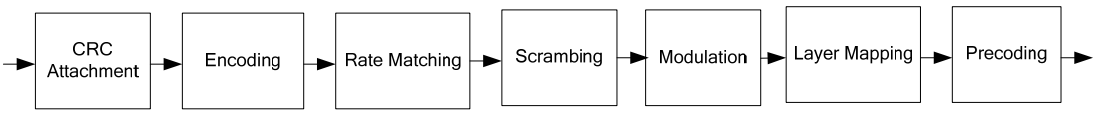

Figure 3.10 Optinal Channel Coding

3.4.1.1 CRC

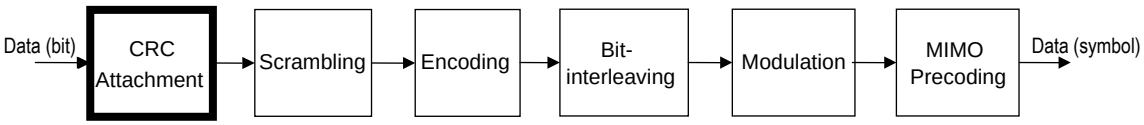

Figure 3.11 CRC Attachment

CRC-bits are appended to each CRC data unit. CRC-bits are generated by either of the following generation polynomials.

CRC-8: 1+X+X^3+ X^4+ X^7+ X^8

CRC-16 : 1 + X^5 + X^12 + X^16

CRC-24(A): 1+X+X^3+X^4 +X^5 + X^6+ X^7 + X^10+ X^11 + X^14++ X^17 + X^18+ X^23 + X^24

CRC-24(B) : 1 + X + X^5 + X^6 + X^23 + X^24 (Optional)

Figure 3.12 shows the method of CRC code for CRC-16. The Initial values of shift register SR1-SR16 are set to all 1. Figure 3.13 shows the method of CRC code for CRC-24(B). The Initial values of shift register SR1-SR24 are set to all 1. The shift register of CRC encoder is initialized for each CRC data unit. In case of Figure 3.12 and Figure 3.13, T1 is switched to the lower side and T2 is closed when CRC-bits are calculated in CRC encoder. After all of data is input into CRC encoder, T1 is switched to the upper side and T2 is opened to output CRC code.

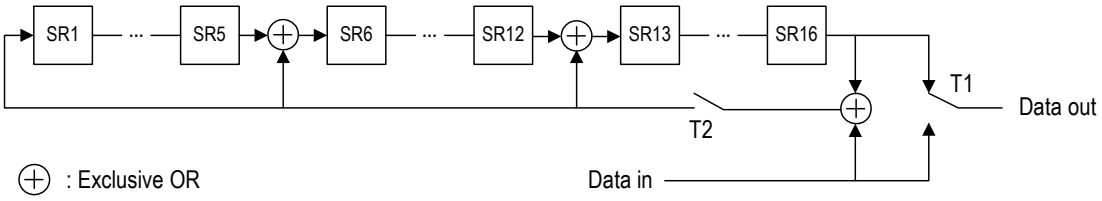

Figure 3.12 The Method of CRC Code for CRC-16

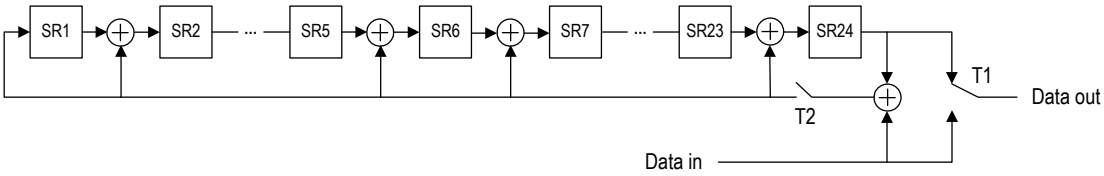

Figure 3.13 The Method of CRC Code for CRC-24

CRC size depends on MAC described in Chapter 4. Application range of CRC is described in Chapter 4.

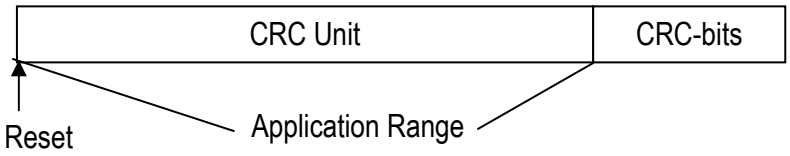

Figure 3.14 CRC Unit with CRC-bits

The Initial values of shift register for CRC-8, CRC-24(A) or CRC-24(B) should be set to all 0 for Optional Channel Coding. If length of the input bit sequence is larger than the maximum code block size *6144*, segmentation of the input bit sequence is performed and an additional CRC sequence is attached to each code block using the generator polynomial CRC-24(B).

3.4.1.2 Scrambling

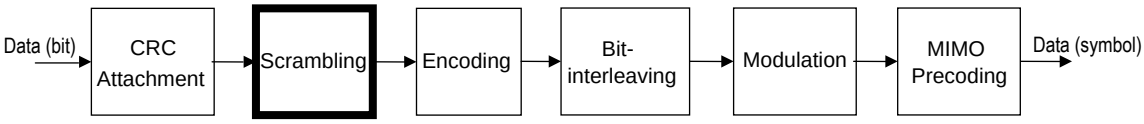

Figure 3.15 Scrambling

The scramble pattern is identical for DL and UL transmission. The generation polynomial is defined as follows:

X^16 + X^12 + X^3 + X + 1

Figure 3.16 shows the structure of scrambling. Initial values of shift register SR16-SR1 are set to the values shown in Table 3.3. The shift register of scrambler is initialized for each CRC data unit.

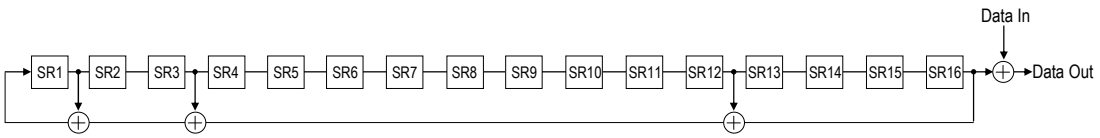

Figure 3.16 Scrambling

Table 3.3 Initial Value of Shift Register SR16-SR1 for Scrambling

Physical Channel	Initial Value of Shift Register SR16-SR1
CCH (for protocol version 1)	All 1
CCH (for protocol version 2)	1010 1010 1010 1010
ICH (EXCH only)	1000 0000 0000 0000 xor BSID lower 15 bit xor MSID lower 15 bit
ICH (except for EXCH after confirmation of MSID)	1000 0000 0000 0000 xor BSID lower 15 bit xor MSID lower 15 bit xor (SCH number – 1) (*1)
ICH (except for EXCH before confirmation of MSID)	1000 0000 0000 0000 xor BSID lower 15 bit xor (SCH number – 1) (*1)

(*1) SCH number: Refer to Section 2.4.3.2.

Application range of scrambling is CRC data unit and CRC-bits as shown in Figure 3.17.

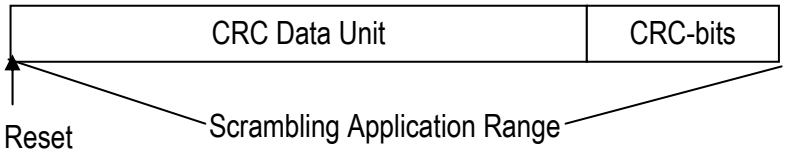

Figure 3.17 Scrambling Application Range

Codeword is a block of coded bits to be transmitted on an optional physical channel. Each codeword shall be scrambled prior to modulation. The scrambling sequence is a length-31 Gold sequence and the generator shall be initialised at the start of each slot, where the initialisation value of c_{init} depends on the transport channel type according to

$$c_{\text{init}} = n_{\text{MSID}} \cdot 2^{14} + q \cdot 2^{13} + \lfloor n_{\text{s}}/2 \rfloor \cdot 2^{9} + N_{\text{ID}}^{\text{BS}}$$

where n_{MSID} corresponds to the MSID associated with the ADEDCH transmission.

3.4.1.3 Encoding

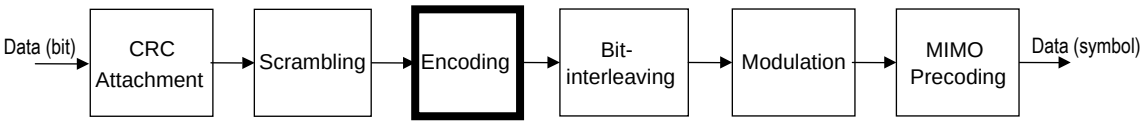

Figure 3.18 Encoding

Error correction code methods are defined as described below.
(a) Convolutional code (coding rate r=1/2) (Mandatory)
(b) Convolutional code (coding rate r=1/3) (Optional)
(c) Tail Biting Convolutional code (coding rate r=1/3)
(d) Turbo code (Optional)

Table 3.4 summarizes the error correction code for physical channel.

Table 3.4 The Error Correction Code for Physical Channel

Physical channel	Error correction code
CCCH	Convolutional code
ANCH	Convolutional code
EXCH	Convolutional/Turbo code
CSCH	Convolutional code

3.4.1.3.1 Error Correction Encoding

3.4.1.3.1.1 Convolutional Code (coding rate r=1/2) (Mandatory)

3.4.1.3.1.1.1 Convolutional Encoder

Constraint length of convolutional encoder is 7. Generation polynomials are G1=133 and G2=171 in octal representation. Figure 3.19 illustrates the constitution of convolutional encoder. For this figure, coding rate of convolutional coding becomes 1/2. The initial value of shift register in encoder is 6-bit 0. As an input to the encoder, tail-bits, which consist of 6-bit 0, are appended to the end of scrambled data bits.

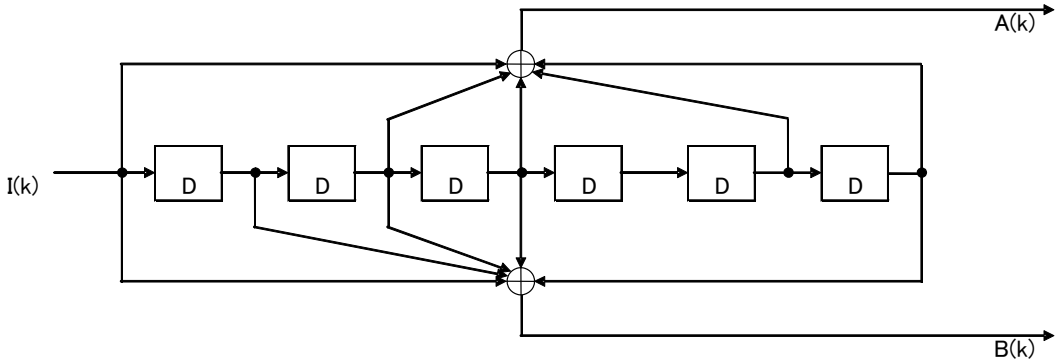

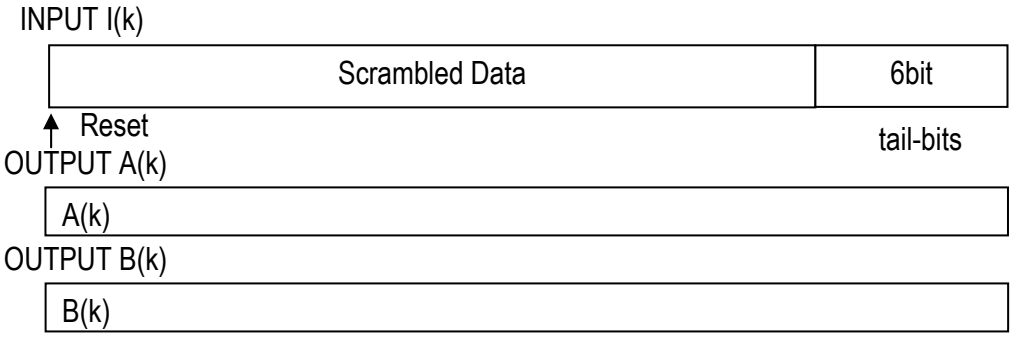

Figure 3.19 Generation Polynomial and Application Range of Convolutional Code

3.4.1.3.1.1.2 Puncturing Pattern

Encoded bits are punctured in order to change coding rate. Table 3.5 describes puncturing pattern related with puncturing rate. In this table, 1 denotes the bits selected and 0 denotes the bits punctured. Figure 3.20 illustrates the puncturing procedure.

Table 3.5 Puncturing Pattern of Convolutional Code

	Puncturing rate R2				
	1	3/4	4/6	6/10	8/14
A	1	11	110	11010	1111010
B	1	10	101	10101	1000101

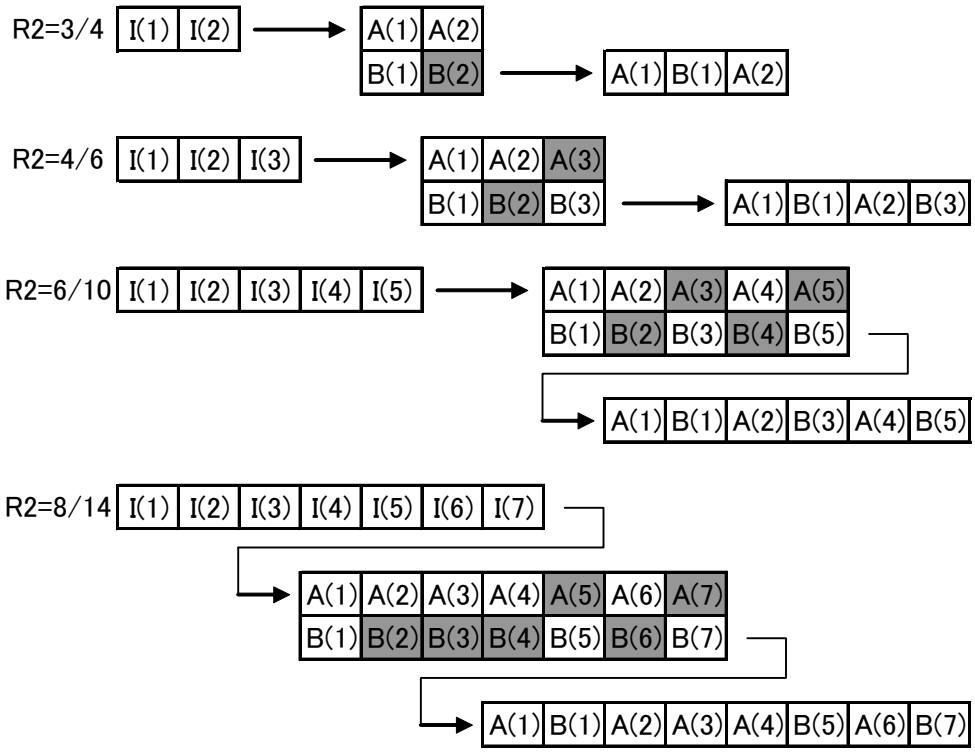

Figure 3.20 Puncturing Procedure for Convolutional Code

3.4.1.3.1.2 Convolutional Code (coding rate r=1/3) (Optional)

3.4.1.3.1.2.1 Convolutional Encoder

Constraint length of convolutional encoder is 7. Generation polynomials are G1=133, G2=171 and G3=165 in octal representation. Figure 3.21 illustrates the constitution of convolutional encoder. For this figure, coding rate of convolutional coding becomes 1/3. The initial value of shift register in encoder is 6-bit 0. As an input to the encoder, tail-bits, which consist of 6-bit 0, are appended to the end of scrambled data bits.

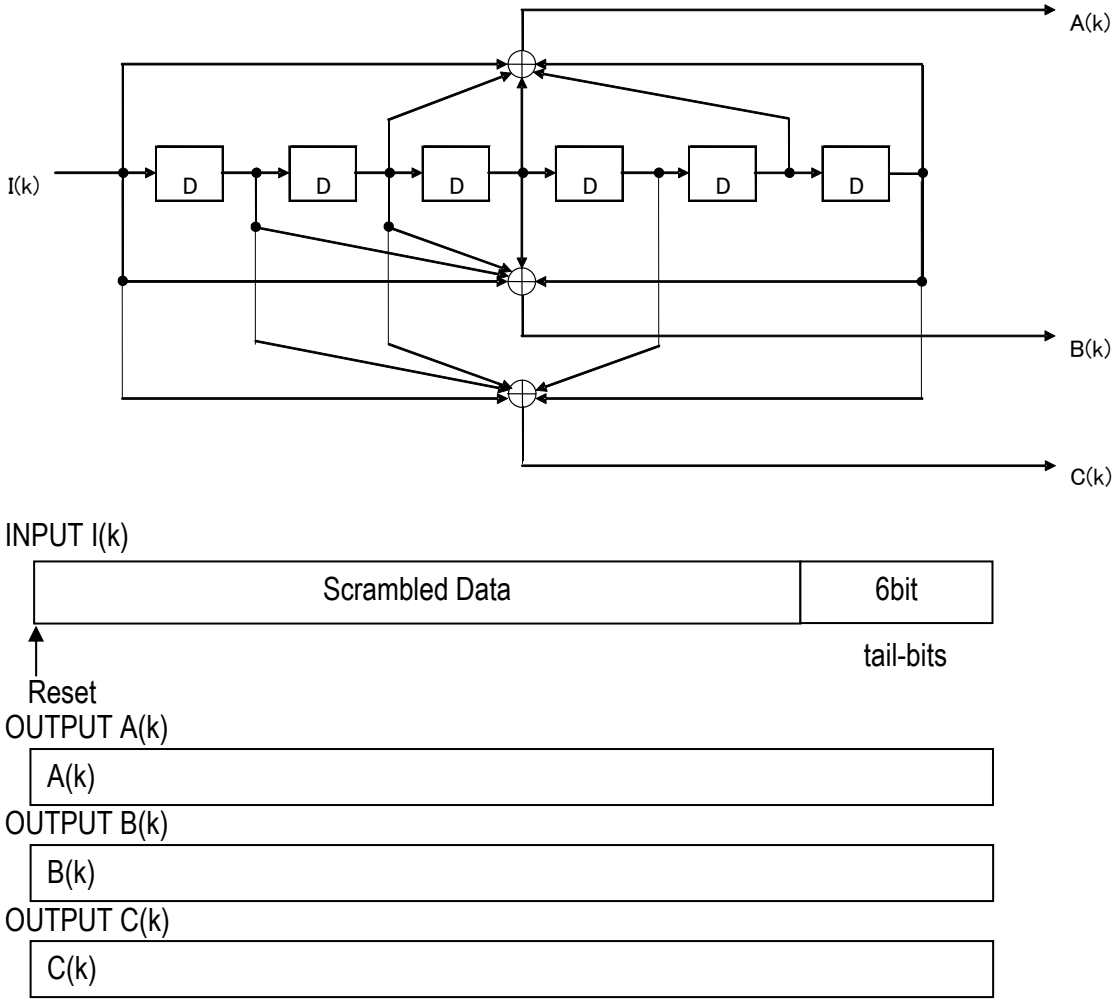

Figure 3.21 Generation Polynomial and Application Range of Convolutional Code

3.4.1.3.1.3 Tail Biting Convolutional Code

A tail biting convolutional code with constraint length 7 and coding rate 1/3 is defined.

The configuration of the convolutional encoder is presented in Figure 3.22.

The initial value of the shift register of the encoder shall be set to the values corresponding to the last 6 information bits in the input stream so that the initial and final states of the shift register are the same. Therefore, denoting the shift register of the encoder by $s_0, s_1, s_2, ..., s_5$, then the initial value of the shift register shall be set to $s_i = I_{(K-1-i)}$.

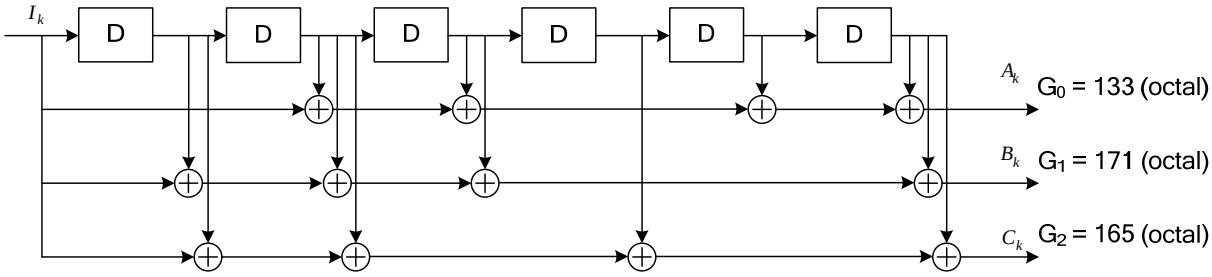

Figure 3.22 Rate 1/3 Tail Biting Convolutional Encoder

The encoder output streams A_k, B_k and C_k correspond to the first, second and third parity streams, respectively as shown in Figure 3.22.

3.4.1.3.1.4 Turbo Code (Optional)

3.4.1.3.1.4.1 Turbo Encoder

Turbo encoder consists of two recursive systematic convolutional encoders connected in parallel, with an interleaver, which is called turbo interleaver, preceding the second constituent encoder. Output bits from turbo encoder consist of systematic bits I(k) and parity bits A(k) and B(k) from each constituent encoder. The two constituent encoders have the same structure as follows.
Generation polynomials of each constituent encoder are G1 = 15 and G2 = 13, which denote feedforward and feedback polynomial in octal representation respectively. Figure 3.23 illustrates the constitution of turbo encoder. For this figure, coding rate of turbo coding becomes 1/3.

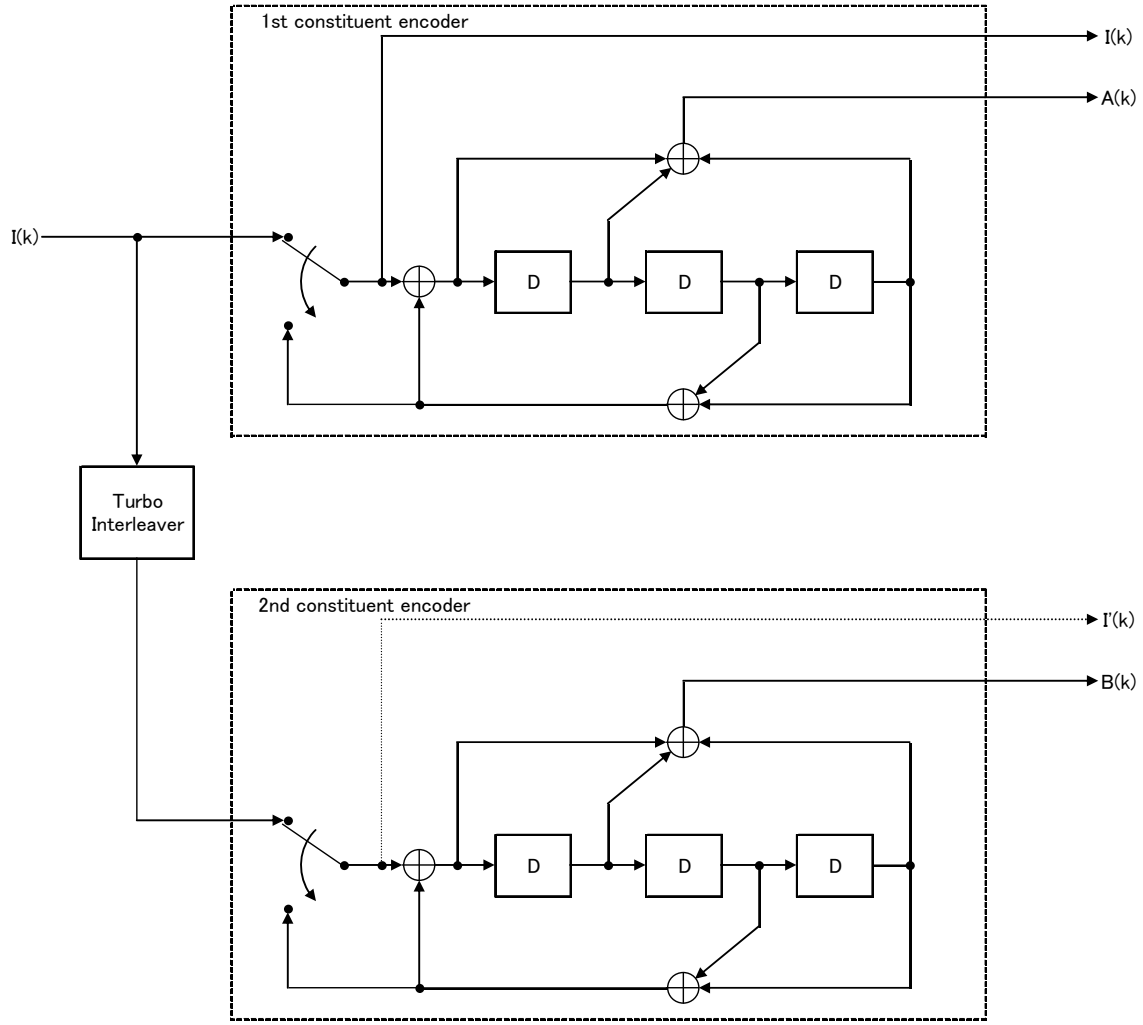

Figure 3.23 Structure of Turbo Encoder

3.4.1.3.1.4.2 Turbo Code Termination

After all information bits are encoded, trellis termination is performed by padding 6 tail-bits. First, by setting switches to the down position, each encoder outputs 3 systematic bits and 3 parity bits. If the number of information bits is N, outputs of 1st and 2nd constituent encoders are as follows:

I(N+1), A(N+1), I(N+2), A(N+2), I(N+3), A(N+3) from 1st constituent encoder
I'(N+1), B(N+1), I'(N+2), B(N+2), I'(N+3), B(N+3) from 2nd constituent encoder

Next, to generate rate-1/3 encoder outputs corresponding to the 6 tail-bits, every systematic bit is repeated and 18 encoded bits are generated as follows:

I(N+1), I(N+1), A(N+1), I(N+2), I(N+2), A(N+2), I(N+3), I(N+3), A(N+3),
I'(N+1), I'(N+1), B(N+1), I'(N+2), I'(N+2), B(N+2), I'(N+3), I'(N+3), B(N+3)

After performing this repetition process, these tail-corresponding bits are rearranged and added after I(N), A(N) and B(N) as follows:

I(N+1), I(N+2), I(N+3), I'(N+1), I'(N+2) and I'(N+3) are added after I(N),
I(N+1), I(N+2), I(N+3), I'(N+1), I'(N+2) and I'(N+3) are added after A(N),
A(N+1), A(N+2), A(N+3), B(N+1), B(N+2) and B(N+3) are added after B(N).

3.4.1.3.1.4.3 Turbo Interleaver

Turbo interleaver interleaves with input information bits, and transmits the interleaved bits to the second constituent encoder. Turbo interleaving is equivalent to a process, in which the entire sequence of input information bits are written sequentially into an array, and then read out by the given procedure. The input bits to the turbo interleaver are denoted by I(1), I(2),…,I(d), where d is the length of input bits. The procedure of interleaving is described as follows:

1. Determine the turbo interleaver parameter M and N as shown in Table 3.6.

Table 3.6 Turbo Interleaver Parameter M and N

Payload size	M	N
372	20	19
744	28	27
1116	34	33
1488	41	37
2232	48	47
2976	57	53
4464	69	65
5952	78	77
6696	83	81
8928	95	94

2. Write the input information bits into the M rows N columns matrix row by row starting with bit $a_{1,1}$ in column 1 of row 1 as shown in Figure 3.24.

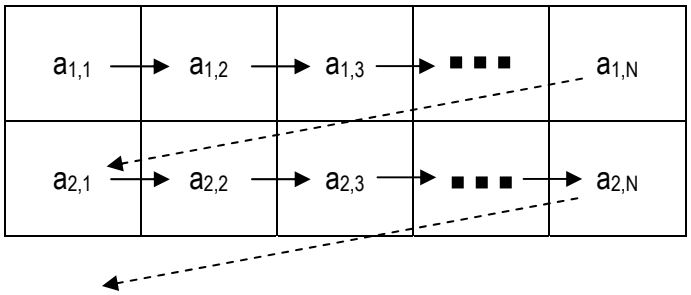

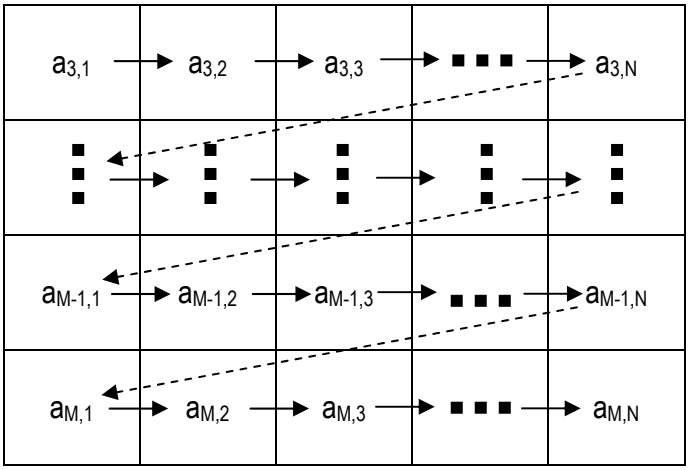

Figure 3.24 Turbo Interleaver Matrix (Write-in)

If MN>d, dummy bits are padded in $a_{M,N-MN+d+1}$ through $a_{M,N}$. These dummy bits are pruned away from read-out sequence.

3. Read out the interleaved bits as follows. First, set i=M and j=1. After reading out the bit $a_{i,j}$, i is decremented by 1 and j is incremented by 1. If i=0, then i is set to M. If j=N+1, then j is set to 1. These process is repeated until M*N bits are read out. The order of reading out is described in Figure 3.25.

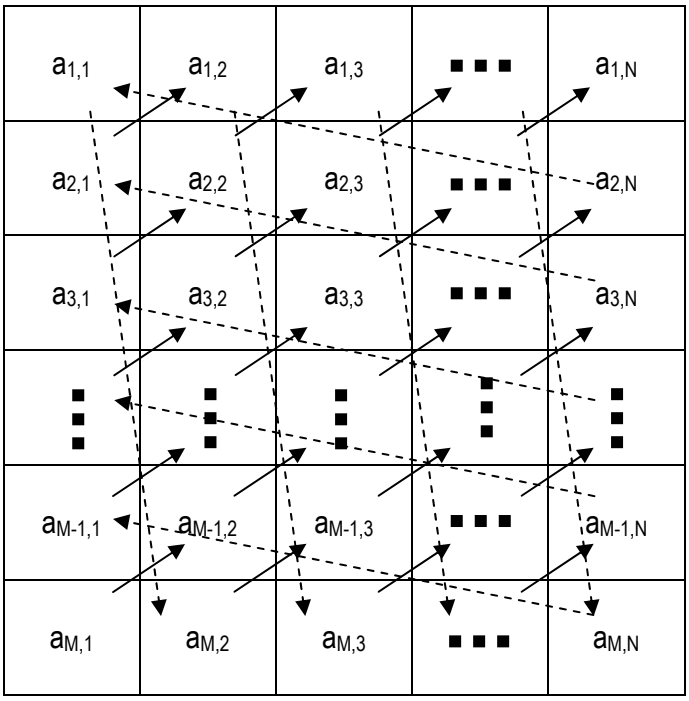

Figure 3.25 Turbo Interleaver Matrix (Read-out)

Another optional procedure of interleaving is described as follows: the output index *j* and the input index *I(j)* of the Turbo Interleaver satisfies the following quadratic form:

$$I(j) = \left(f_1 \cdot j + f_2 \cdot j^2\right) \bmod K$$

Where the parameters f_1 and f_2 depend on the block size *K*. The block size K is from 40 to 6144.

4. Remove the dummy bits padded in 2.

The number of the read-out bits is M*N after reading out all the written bits, and the number of dummy bits is M*N-d after deleting the padded dummy bits. Hence, the total number of output bits becomes d.

3.4.1.3.1.4.4 Puncturing pattern

Punctured turbo encoded bits consist of systematic bits and punctured parity bits. Assume that coding rate R2 is k/(k+1), while k is 1, 2, 3, 5 and 7 parity bits are selected in every 2*k parity bits at each constituent encoder, except for the case of k being 7. In case of k being 7, puncturing pattern has to be specified so that all trellis state will be appeared because period of feedback polynomial at each constituent encoder is 7. Table 3.7 describes puncturing patterns at each coding rate. P(m1 m2 … ,n1 n2 …) represents that (m1,m2,…)-th parity bits are selected in every 2*k parity bits at the first constituent encoder and (n1,n2,…)-th parity bits are selected in every 2*k parity bits at the second constituent encoder, while k is 1, 2, 3 and 5. While k is 7, (m1,m2,…)-th parity bits are selected in every 98 parity bits at the first constituent encoder and (n1,n2,…)-th parity bits are selected in every 98 parity bits at the second constituent encoder.
Figure 3.26 illustrates the punctured turbo procedure with encoded bits while R2 is 1/2, 2/3, 3/4 and 5/6. Figure 3.27 illustrates the punctured turbo coding procedure while R2 is 7/8. As shown in Figure 3.27, a parity bit is selected from every 15 bits in 98 parity bits at each constituent encoder.

Table 3.7 Coding Rate and Puncturing Pattern

Coding Rate	Puncturing Pattern
1/2	P(1,2)
2/3	P(1,3)
3/4	P(1,4)
5/6	P(1,6)
7/8	P(1 16 31 46 61 76 91,8 23 38 53 68 83 98)

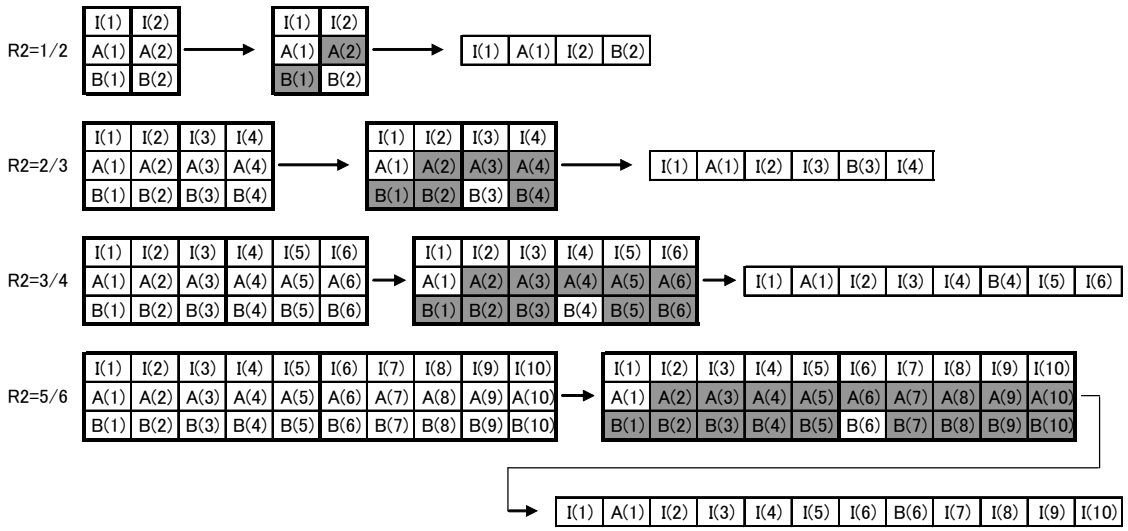

Figure 3.26 Puncturing Procedure while R2 is 1/2, 2/3, 3/4 and 5/6

R2=7/8

I(1)	I(2)	I(3)	I(4)	I(5)	I(6)	I(7)	I(8)	I(9)	I(10)	I(11)	I(12)	I(13)	I(14)
A(1)	A(2)	A(3)	A(4)	A(5)	A(6)	A(7)	A(8)	A(9)	A(10)	A(11)	A(12)	A(13)	A(14)
B(1)	B(2)	B(3)	B(4)	B(5)	B(6)	B(7)	B(8)	B(9)	B(10)	B(11)	B(12)	B(13)	B(14)

I(15)	I(16)	I(17)	I(18)	I(19)	I(20)	I(21)	I(22)	I(23)	I(24)	I(25)	I(26)	I(27)	I(28)
A(15)	A(16)	A(17)	A(18)	A(19)	A(20)	A(21)	A(22)	A(23)	A(24)	A(25)	A(26)	A(27)	A(28)
B(15)	B(16)	B(17)	B(18)	B(19)	B(20)	B(21)	B(22)	B(23)	B(24)	B(25)	B(26)	B(27)	B(28)

⋮

I(71)	I(72)	I(73)	I(74)	I(75)	I(76)	I(77)	I(78)	I(79)	I(80)	I(81)	I(82)	I(83)	I(84)
A(71)	A(72)	A(73)	A(74)	A(75)	A(76)	A(77)	A(78)	A(79)	A(80)	A(81)	A(82)	A(83)	A(84)
B(71)	B(72)	B(73)	B(74)	B(75)	B(76)	B(77)	B(78)	B(79)	B(80)	B(81)	B(82)	B(83)	B(84)

I(85)	I(86)	I(87)	I(88)	I(89)	I(90)	I(91)	I(92)	I(93)	I(94)	I(95)	I(96)	I(97)	I(98)
A(85)	A(86)	A(87)	A(88)	A(89)	A(90)	A(91)	A(92)	A(93)	A(94)	A(95)	A(96)	A(97)	A(98)
B(85)	B(86)	B(87)	B(88)	B(89)	B(90)	B(91)	B(92)	B(93)	B(94)	B(95)	B(96)	B(97)	B(98)

↓

I(1)	I(2)	I(3)	I(4)	I(5)	I(6)	I(7)	I(8)	I(9)	I(10)	I(11)	I(12)	I(13)	I(14)
A(1)	A(2)	A(3)	A(4)	A(5)	A(6)	A(7)	A(8)	A(9)	A(10)	A(11)	A(12)	A(13)	A(14)
B(1)	B(2)	B(3)	B(4)	B(5)	B(6)	B(7)	B(8)	B(9)	B(10)	B(11)	B(12)	B(13)	B(14)

I(15)	I(16)	I(17)	I(18)	I(19)	I(20)	I(21)	I(22)	I(23)	I(24)	I(25)	I(26)	I(27)	I(28)
A(15)	A(16)	A(17)	A(18)	A(19)	A(20)	A(21)	A(22)	A(23)	A(24)	A(25)	A(26)	A(27)	A(28)
B(15)	B(16)	B(17)	B(18)	B(19)	B(20)	B(21)	B(22)	B(23)	B(24)	B(25)	B(26)	B(27)	B(28)

⋮

I(71)	I(72)	I(73)	I(74)	I(75)	I(76)	I(77)	I(78)	I(79)	I(80)	I(81)	I(82)	I(83)	I(84)
A(71)	A(72)	A(73)	A(74)	A(75)	A(76)	A(77)	A(78)	A(79)	A(80)	A(81)	A(82)	A(83)	A(84)
B(71)	B(72)	B(73)	B(74)	B(75)	B(76)	B(77)	B(78)	B(79)	B(80)	B(81)	B(82)	B(83)	B(84)

I(85)	I(86)	I(87)	I(88)	I(89)	I(90)	I(91)	I(92)	I(93)	I(94)	I(95)	I(96)	I(97)	I(98)
A(85)	A(86)	A(87)	A(88)	A(89)	A(90)	A(91)	A(92)	A(93)	A(94)	A(95)	A(96)	A(97)	A(98)
B(85)	B(86)	B(87)	B(88)	B(89)	B(90)	B(91)	B(92)	B(93)	B(94)	B(95)	B(96)	B(97)	B(98)

I(1)	A(1)	I(2)	I(3)	I(4)	I(5)	I(6)	I(7)	I(8)	B(8)	I(9)	I(10)	I(11)	I(12)	I(13)	I(14)

I(15)	I(16)	A(16)	I(17)	I(18)	I(19)	I(20)	I(21)	I(22)	I(23)	B(23)	I(24)	I(25)	I(26)	I(27)	I(28)

⋮

I(71)	I(72)	I(73)	I(74)	I(75)	I(76)	A(76)	I(77)	I(78)	I(79)	I(80)	I(81)	I(82)	I(83)	B(83)	I(84)

I(85)	I(86)	I(87)	I(88)	I(89)	I(90)	I(91)	A(91)	I(92)	I(93)	I(94)	I(95)	I(96)	I(97)	I(98)	B(98)

Figure 3.27 Puncturing Procedure while R2 is 7/8

3.4.1.4 Bit-interleaving

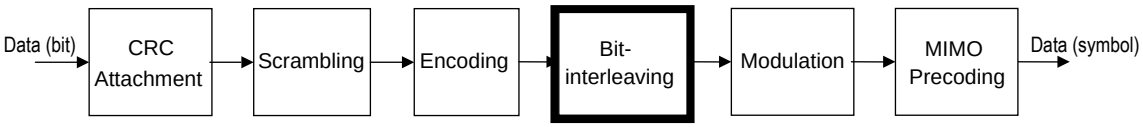

Figure 3.28 Interleaving

3.4.1.4.1 Bit-interleaver Structure

Figure 3.29 illustrates the application range of bit-interleaving. In this figure, the parameter b(1),…,b(xy) is the bit series after encoding. The number of input bits to the interleaver is x*y, where the parameter x is the number of bits in a symbol and the parameter y is the number of symbols(*1). The bit-interleaver unit consists of x block interleavers. Each block interleaver interleaves y bits separately. The details on the block interleaver are described in Section 3.4.1.4.2.

(*1) In case of BPSK or π/2-BPSK with coding rate of 2/3 for CSCH, one dummy bit of 0 is appended to the end of the punctured bits. In other cases, the punctured bits equal to the input bits of bit-interleaver.

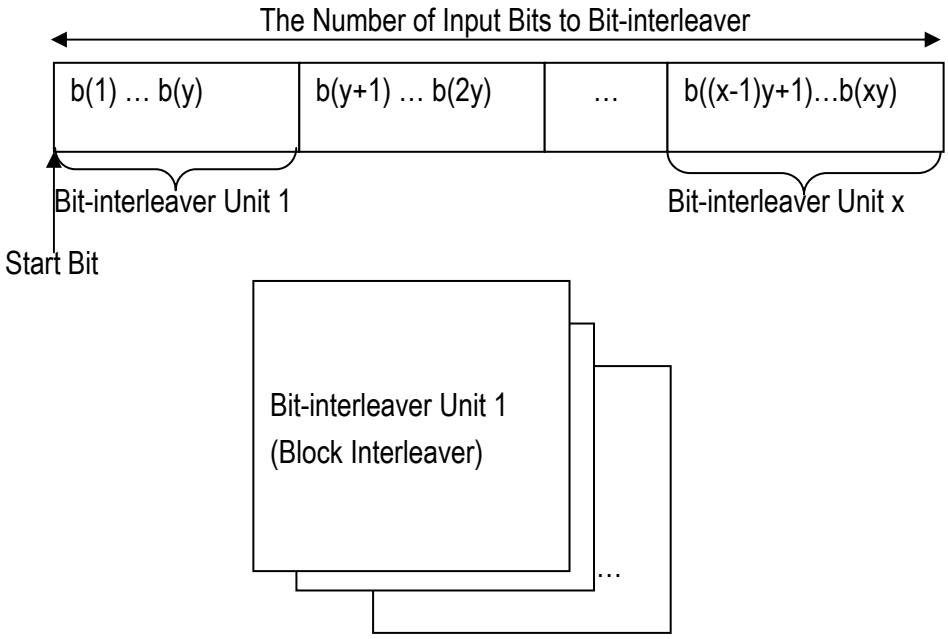

Figure 3.29 Application Range of Bit-interleaving

3.4.1.4.2 Block Interleaver Method

Block interleaver is used for each y bits in each column as explained in

Figure 3.29. Input bits are written sequentially into an array per bit in symbol, and then read out by the given procedure. The number of input bits to the interleaver depends on symbol size of physical channel and modulation class. The procedure of interleaving is described as follows:

1. Determine the interleaver parameter x and y based on the number of input bits and modulation class.
2. Determine the block interleaver parameter N and M for each physical channel, where y= N*M, N is column size, and M is row size.
3. Write the input information bits into the M-row N-column matrix row. Write starting position shall be set according to bit position i (i=1,…,x) in a symbol. Figure 3.30 illustrates block interleaver matrix for writing in case of n being 1.
4. Read the written bits from the M-row N-column matrix row to interleave each bit in symbol and each symbol. Read starting position shall be set according to bit position in a symbol.

Figure 3.31 illustrates a block interleaver matrix for reading in case n being 1.

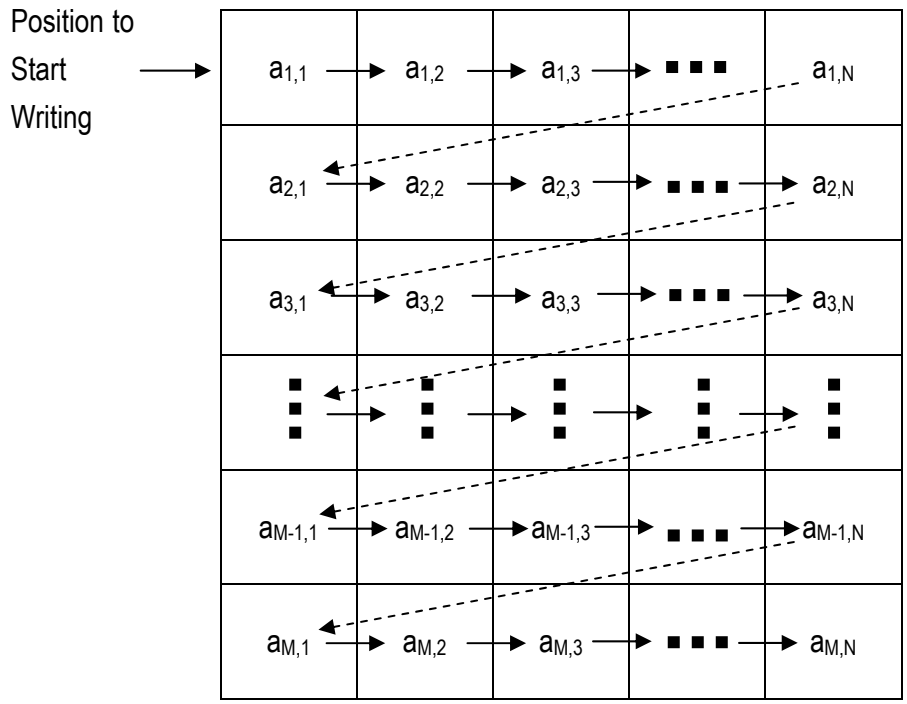

Figure 3.30 Interleaver Matrix (Write-in) in case of n being 1

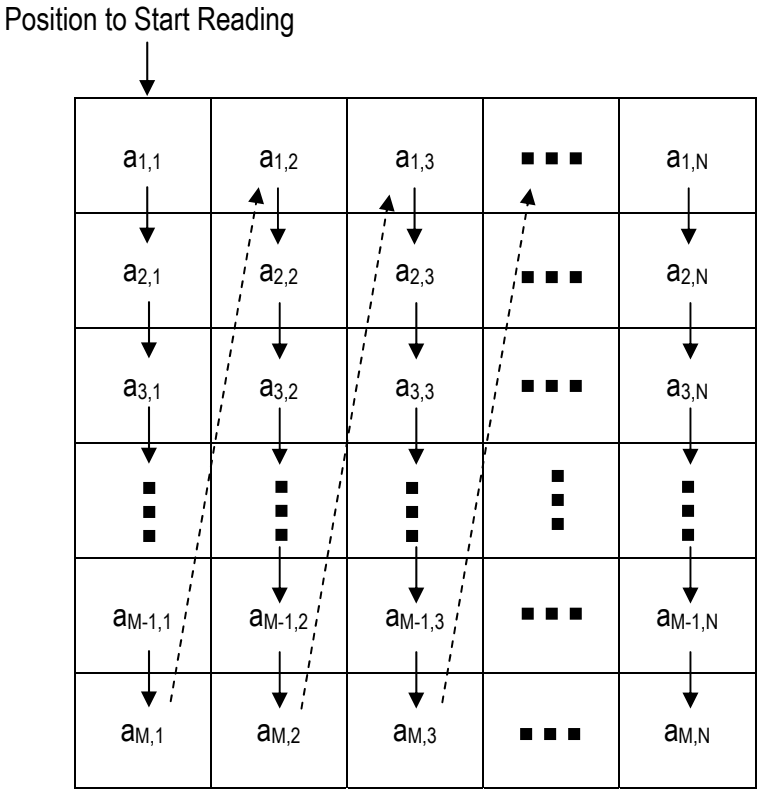

Figure 3.31 Interleaver Matrix (Read-out) in case of n being 1

3.4.1.4.3 Interleaver Parameters for OFDM

Table 3.8 and Table 3.9 summarize the parameters of the interleaver for input bit size and modulation class.

The value of M and N in Table 3.8 are decided by the following processing.

1. Determine the interleaver parameter x and y based on the number of input bits and modulation class, where x stands for coded bits per symbol and y stands for the number of symbol.
2. Determine the block interleaver parameter N and M, where any CRC unit size “A” use the largest valid interleaving matrix y=M*N that does not exceed A with N restricted to the range [12.18]. Wasted allocated “P” symbol exist in case that y is not equal to M*N. Number of

columns “N” is determined by choosing N from [13,12,18,17,16,15,14], such that P=y-floor(y/N)*N is minimized. If N that P is minimized exists more than one value, N selects first number of permutation [13,12,18,17,16,15,14]. The number of row “M” is defined by equation M=floor(y/N). M*N denotes size of a block interleaver.

Note: It is not P=0 in case of y=358 and 366 as shown Table 3.8. This means the number of data symbols “y” is not the same as interleave size “M*N”. In this case, “y-M*N” data symbols are processed as DTX.

Table 3.8 Interleaver Parameter M, N and P

Number of Symbols y	M	N	P
324	27	12	0
340	20	17	0
348	29	12	0
358	21	17	1
364	28	13	0
366	28	13	2
372	31	12	0
384	32	12	0
390	30	13	0
408	34	12	0
696	58	12	0
744	62	12	0
750	50	15	0
768	64	12	0
780	60	13	0
798	57	14	0
816	68	12	0

Table 3.9 Interleaver Parameter

Modulation	The Number of Block Interleavers
BPSK	1
QPSK	2
16QAM	4
64QAM	6
256QAM	8

Table 3.10 summarizes the definition of bit position i (i=1,..,x) in a symbol.

Table 3.10 The Definition of Bit Position i in a Symbol

Modulation	Bit Position i in a Symbol
BPSK	i = (1)
QPSK	i = (1,2)
16QAM	i = (1,2,3,4)
64QAM	i = (1,2,3,4,5,6)
256QAM	i = (1,2,3,4,5,6,7,8)

Table 3.11 summarizes the position to start writing and the position to start reading for interleaver.

Table 3.11 Starting Position for Interleaver

Bit position i in a Symbol	Position to Start Writing	Position to Start Reading
1	$a_{1,1}$	$a_{1,1}$
2	$a_{3,1}$	$a_{1,2}$
3	$a_{5,1}$	$a_{1,3}$
4	$a_{7,1}$	$a_{1,4}$
5	$a_{9,1}$	$a_{1,5}$
6	$a_{11,1}$	$a_{1,6}$
7	$a_{13,1}$	$a_{1,7}$
8	$a_{15,1}$	$a_{1,8}$

If this interleaver is represented by equation, the permutation of the i-th block interleaver is defined as following.

lout = [{N(j-1) mod M*N + (floor((j-1)/M)+(c-1)) mod N +N*(M-(r-1))} mod M*N] + (i-1)*M*N+1*

*y = M*N*

j = 1,..,y

i = 1,..,x

lin = 1,..,xy

The function floor() denotes the largest integer not exceeding the parameter.

lout : the permutation after interleaver

r : Write starting position $a_{r,1}$ in bit position of a symbol

c : Read starting position $a_{1,c}$ in bit position of a symbol

y : the number of symbol

x : the number in a symbol

M : row of block interleaver

N : column of block interleaver

lin : the permutation before interleaver : *j + (i-1)*y*

For the parameter r and c, refer to Table 3.11 and Table 3.39.

The procedure of interleaving is performed as following:
1. Set j = 1 and i = 1. Then increase j to y.
2. Set j = 1 and i = i +1. Then increase j to y.
3. Repeat 2 until i equals to x.

3.4.1.4.4 Output-bits after Bit-interleaver

The IQ data symbol is generated by using x bits, each of which is taken from each block interleaver. Denote the output bits from i-th block interleaver by z(i,1), z(i,2), …, z(i,y). Thus, the j-th IQ data symbol is converted from the bit series $z(p_1,j)$, $z(p_2,j)$,…,$z(p_x,j)$, where p_i is an offset value to circulate the order of input bits to the modulator. The process is defined as follows:

Input bits to the modulator: $z(p_1,j)$, $z(p_2,j)$,…,$z(p_x,j)$
Offset value: $p_i = ((i+j-2) \bmod x)+1$

3.4.1.4.5 Bit-interleaving and Rate matching

3.4.1.4.5.1 Bit-interleaver Structure

The rate matching for convolutionally coded transport channels and control information consists of interleaving the three bit streams, $d_k^{(0)}$, $d_k^{(1)}$ and $d_k^{(2)}$, followed by the collection of bits and the generation of a circular buffer. The bit stream $d_k^{(0)}$ is interleaved according to the sub-block interleaver with an output sequence defined as $v_0^{(0)}, v_1^{(0)}, v_2^{(0)}, ..., v_{K_\Pi-1}^{(0)}$.The bit stream $d_k^{(1)}$ is interleaved according to the sub-block interleaver with an output sequence defined as $v_0^{(1)}, v_1^{(1)}, v_2^{(1)}, ..., v_{K_\Pi-1}^{(1)}$. The bit stream $d_k^{(2)}$ is interleaved according to the sub-block interleaver with an output sequence defined as $v_0^{(2)}, v_1^{(2)}, v_2^{(2)}, ..., v_{K_\Pi-1}^{(2)}$.

3.4.1.4.5.2 Block Interleaver Method

The output bit sequence from the block interleaver is derived as follows:

(1) D is the number of bits input to the block interleaver.Determine the number of rows of the matrix R, by finding minimum integer R such that $D \le (R \times C)$.

(2) If $(R \times C) > D$, then $N_D = (R \times C - D)$ dummy bits are padded. $y_{N_D+k} = d_k^{(i)}$, k = 0, 1,…, D-1, and the bit sequence y_k is written into the matrix row by row starting with bit y_0 in column 0 of row 0.

(3) Perform the inter-column permutation for the matrix based on the pattern $< P(0), P(1), ..., P(31) >$ = < 1, 17, 9, 25, 5, 21, 13, 29, 3, 19, 11, 27, 7, 23, 15, 31, 0, 16, 8, 24, 4, 20, 12, 28, 2, 18, 10, 26, 6, 22, 14, 30 >.

(4) The output of the block interleaver is the bit sequence read out column by column from the inter-column permuted matrix.

This block interleaver is also used in interleaving ADEDCH modulation symbols. In that case, the input bit sequence consists of ADEDCH symbol quadruplets.

3.4.1.4.5.3 Output-bits after Bit-interleaver

The circular buffer of length $K_w = 3K_\Pi$ is generated as follows:

$$w_k = v_k^{(0)}, \quad w_{K_\Pi + k} = v_k^{(1)}, \quad w_{2K_\Pi + k} = v_k^{(2)}, \quad \text{for } k = 0, \ldots, K_\Pi - 1$$

Denoting by E the rate matching output sequence length, the rate matching output bit sequence is e_k, k = 0,1,..., $E-1$. The procedure of e_k is shown as Figure 3.32.

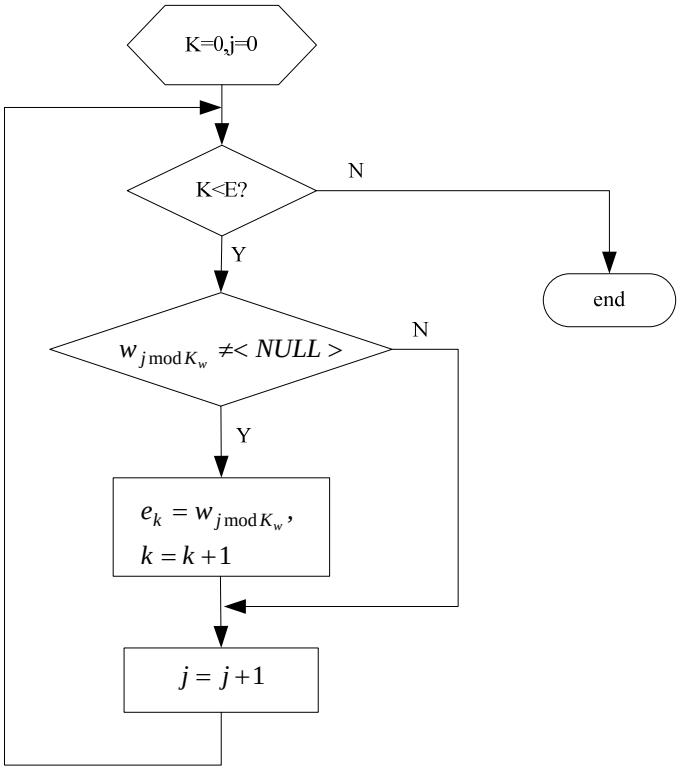

Figure 3.32 Procedure of Rate Matching Output Sequence

3.4.1.5 Modulation Method

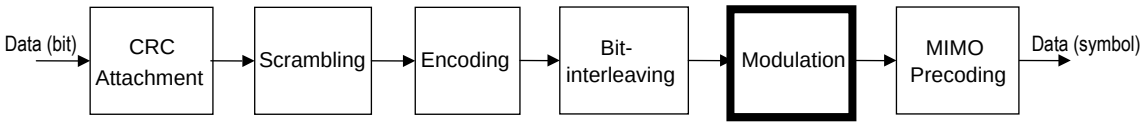

Figure 3.33 Modulation

The serial signal input after interleaving is converted to IQ Data symbol on each symbol.
The constellation mapping for each modulation (BPSK, QPSK, 16QAM, 64QAM and 256QAM) is shown in Appendix B.
a) BPSK
Refer to Appendix B.1.
b) QPSK
Refer to Appendix B.3.
c) 16QAM
Refer to Appendix B.6.
d) 64QAM
Refer to Appendix B.7.
e) 256QAM
Refer to Appendix B.8.

For optional Channel Coding, the block of scrambled bits in each codeword shall be modulated using one of the modulation schemes {BPSK, QPSK, 16QAM, 64QAM, 256QAM }, refer to Appendix B.10, resulting in a block of complex-valued modulation symbols.

3.4.1.6 Precoding Method
MIMO Precoding is performed after first modulation and before symbol mapping as shown in Figure 3.34. Since precoding method for SISO and SDMA is the same as protocol version 1, this section describes precoding method for STBC, SM and EMB-MIMO.

Figure 3.34 MIMO Precoding

Precoded data $X_k(t)$ of antenna number k with data number t is generally represented as

$$X_k(t) = \sum_{i=1}^{nos} V_{k,i} S_i(t)$$

, where $S_i(t)$ means first modulation output of i-th stream with data number t (=1 to the number of data symbol in a CRC unit). V is the transmit vector, and nos is the number of streams. Antenna

number is defined as logical antenna number. The number of logical antenna is the same as the number of layer. Note that the number of physical antenna is equal to or more than that of logical antenna.

3.4.1.6.1 STBC-MIMO

Only 1 stream is defined for STBC-MIMO because it is MIMO technology to obtain stability. STBC-MIMO with 2 and 4 transmission antennas is described in this section.

3.4.1.6.1.1 2 Layer STBC-MIMO

Precoding for 2 Layer STBC-MIMO with 2 antennas is defined as

$$\begin{bmatrix} X_1(t_1) & X_1(t_2) \\ X_2(t_1) & X_2(t_2) \end{bmatrix} = \frac{1}{\sqrt{2}} \begin{bmatrix} S_1(t_1) & -S_1^*(t_2) \\ S_1(t_2) & S_1^*(t_1) \end{bmatrix}$$

, where * represents complex conjugate.[1]

"$1/\sqrt{2}$" described in the right side means that 1 antenna transmits 3dB lower signal than the case of SISO because 2 stream data symbols are multiplexed. In addition, the pilot and training symbols are transmitted with regular intervals in frequency. Therefore, the training and pilot symbols are 5.5dB higher than data symbol.

[1] This equation assumes that the number of symbol in a PRU is even.

3.4.1.6.1.2 4 Layer STBC-MIMO

Precoding for 4 Layer STBC-MIMO with 4 antennas is defined as

$$\begin{bmatrix} X_1(t_1) & X_1(t_2) & X_1(t_3) & X_1(t_4) \\ X_2(t_1) & X_2(t_2) & X_2(t_3) & X_2(t_4) \\ X_3(t_1) & X_3(t_2) & X_3(t_3) & X_3(t_4) \\ X_4(t_1) & X_4(t_2) & X_4(t_3) & X_4(t_4) \end{bmatrix} = \frac{1}{\sqrt{2}} \begin{bmatrix} S_1(t_1) & -S_1^*(t_2) & 0 & 0 \\ S_1(t_2) & S_1^*(t_1) & 0 & 0 \\ 0 & 0 & S_1(t_3) & -S_1^*(t_4) \\ 0 & 0 & S_1(t_4) & S_1^*(t_3) \end{bmatrix}$$

, where * represents complex conjugate.[2]

"$1/\sqrt{2}$" described in the right side means that 1 antenna transmits 3dB lower signal than the case of SISO because 2 stream data symbols are multiplexed. In addition, the pilot and training symbols are transmitted with regular intervals in frequency. Therefore, the training and pilot symbols are 5.5dB higher than data symbol.

[2] This equation assumes that the number of symbol in a PRU is even.

3.4.1.6.2 SM-MIMO

SM-MIMO is a technique to increase user throughput. SM-MIMO with 2 and 4 transmission

antennas is described in this section. The same MCS should be selected in all streams. SM-MIMO performs vertical encoding. For example, 1st stream data is precoded and mapped to each antenna at first, and then 2nd stream data is precoded after 1st stream data.

3.4.1.6.2.1 2 Layer SM-MIMO

Precoding for 2 Layer SM-MIMO with 2 antennas is defined as

$$\begin{bmatrix} X_1(t_1) & X_1(t_2) \\ X_2(t_1) & X_2(t_2) \end{bmatrix} = \frac{1}{\sqrt{2}} \begin{bmatrix} S_1(t_1) & S_1(t_3) \\ S_1(t_2) & S_1(t_4) \end{bmatrix}$$

"$1/\sqrt{2}$" described in the right side means that 1 antenna transmits 3dB lower signal than the case of SISO because 2 stream data symbols are multiplexed. In addition, the pilot and training symbols are transmitted with regular intervals in frequency. Therefore, the training and pilot symbols are 5.5dB higher than data symbol. Figure 3.35 shows SM-MIMO precoding for 2 antennas. Antenna 1 and 2 transmit stream 1 data, respectively, and then they transmit stream 2 data, respectively.

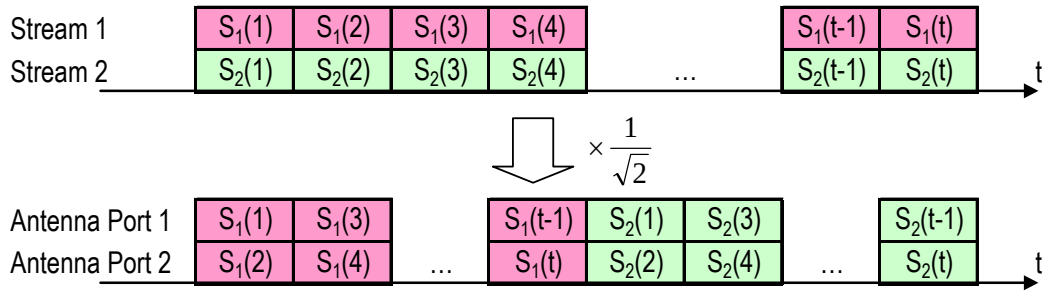

Figure 3.35 SM-MIMO Precoding for 2 antennas

3.4.1.6.2.2 4 Layer SM-MIMO

Precoding for 4 Layer SM-MIMO with 4 antennas is defined as

$$\begin{bmatrix} X_1(t_1) & X_1(t_2) & X_1(t_3) & X_1(t_4) \\ X_2(t_1) & X_2(t_2) & X_2(t_3) & X_2(t_4) \\ X_3(t_1) & X_3(t_2) & X_3(t_3) & X_3(t_4) \\ X_4(t_1) & X_4(t_2) & X_4(t_3) & X_4(t_4) \end{bmatrix} = \frac{1}{2} \begin{bmatrix} S_1(t_1) & S_1(t_5) & S_1(t_9) & S_1(t_{13}) \\ S_1(t_2) & S_1(t_6) & S_1(t_{10}) & S_1(t_{14}) \\ S_1(t_3) & S_1(t_7) & S_1(t_{11}) & S_1(t_{15}) \\ S_1(t_4) & S_1(t_8) & S_1(t_{12}) & S_1(t_{16}) \end{bmatrix}$$

"1/2" described in the right side means that 1 antenna transmits 6dB lower signal than the case of SISO because 4 stream data symbols are multiplexed. In addition, the pilot and training symbols are transmitted with regular intervals in frequency. Therefore, the training and pilot symbols are 8.5dB higher than data symbol. Figure 3.36 shows SM-MIMO precoding for 4 antennas. Antenna 1, 2, 3, and 4 transmit stream 1 data, respectively, and then they transmit stream 2, 3, 4 data as with stream 1.

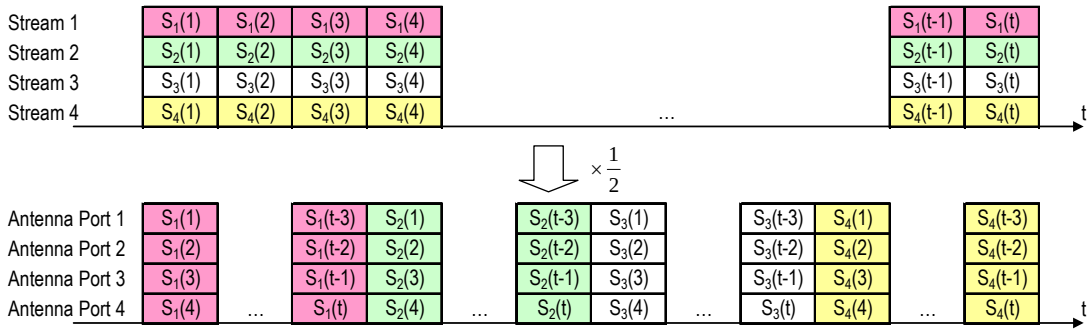

Figure 3.36 SM-MIMO Precoding for 4 antennas

3.4.1.6.3 EMB-MIMO

EMB-MIMO is a technique to increase user throughput and adopted only for DL in protocol version 2. EMB-MIMO block diagram is shown in Figure 3.37. Channel information obtained on reception side is decomposed using SVD. Resultant unitary matrix is used as transmission weight. However, the channel information is not limited to the above expression as long as that can improve the reception at the receiver.

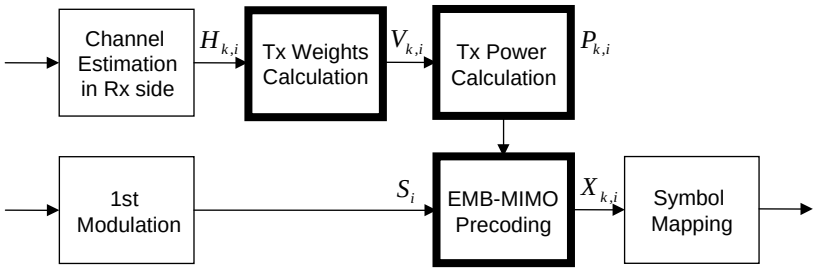

Figure 3.37 EMB-MIMO block diagram

3.4.1.6.3.1 Transmission Weight Calculation

Tx weight V is obtained by k-by-i channel response matrix ($H_{k,i}$) using SVD on reception side. SVD of channel response matrix is represented as

$$H_{k,i} = U_{k,i} \Sigma_{i,i} V_{k,i}{}^{H}$$

$$\Sigma_{i,i} = diag\left(\sqrt{\lambda_1} \Lambda \sqrt{\lambda_{nos}}\right)$$

$$W_{k,i}{}^{H} = V_{k,i}{}^{H} \cdot C_k$$

, where U and V are unitary matrices, and Σ is diagonal matrix with nonnegative numbers on the diagonal. ^{H} means complex conjugate transposed. nos is the number of streams. C is calibration vector. W is transmission weights. However, the transmission weight W is not limited to the above expression as long as that can improve the reception at the receiver.

3.4.1.6.3.2 2 Layer EMB-MIMO

EMB precoding with 2 antennas is defined as

$$\begin{bmatrix} X_1(t) \\ X_2(t) \end{bmatrix} = \begin{bmatrix} W_{11}(t) & W_{12}(t) \\ W_{21}(t) & W_{22}(t) \end{bmatrix} \begin{bmatrix} \sqrt{P_1} S_1(t) \\ \sqrt{P_2} S_2(t) \end{bmatrix}$$

Note that data, training, pilot and signal symbols are also weighted by transmission power. Regarding signal symbols, transmission weight W and P are applied after STBC coded signal $S_i(t)$.

3.4.1.6.3.3 4 Layer EMB-MIMO

EMB precoding with 4 antennas is defined as

$$\begin{bmatrix} X_1(t) \\ X_2(t) \\ X_3(t) \\ X_4(t) \end{bmatrix} = \begin{bmatrix} W_{11}(t) & W_{12}(t) & W_{13}(t) & W_{14}(t) \\ W_{21}(t) & W_{22}(t) & W_{23}(t) & W_{24}(t) \\ W_{31}(t) & W_{32}(t) & W_{33}(t) & W_{34}(t) \\ W_{41}(t) & W_{42}(t) & W_{43}(t) & W_{44}(t) \end{bmatrix} \begin{bmatrix} \sqrt{P_1} S_1(t) \\ \sqrt{P_2} S_2(t) \\ \sqrt{P_3} S_3(t) \\ \sqrt{P_4} S_4(t) \end{bmatrix}$$

Note that data, training, pilot and signal symbols are also weighted by transmission power. Regarding signal symbols, transmission weight W and P are applied after STBC coded signal $S_i(t)$.

3.4.1.6.4 Optional Precoding Method

3.4.1.6.4.1 Precoding for transmission on a single antenna port

For transmission on a single antenna port, $y^{(p)}(i)$ represents the signal for antenna port p, $p \in \{0,4,5,7,8\}$ is the number of the single antenna port used for transmission of the physical channel, $x(i) = \left[x^{(0)}(i) \quad \ldots \quad x^{(l-1)}(i)\right]^T$, $i = 0,1,\ldots,M_{\text{layer}} - 1$ is input block of vectors from the layer mapping. precoding for transmission on a signle antenna port is defined by $y^{(p)}(i) = x^{(0)}(i)$.

3.4.1.6.4.2 Precoding for spatial multiplexing using antenna ports with BS-specific pilot

Precoding for spatial multiplexing using antenna ports with cell-specific pilot is only used in combination with layer mapping for spatial multiplexing. Spatial multiplexing supports two or four antenna ports and the set of antenna ports used is $p \in \{0,1\}$ or $p \in \{0,1,2,3\}$, respectively.

3.4.1.6.4.2.1 Precoding without CDD

Without cyclic delay diversity (CDD), precoding for spatial multiplexing is defined by

$Y(i) = W(i)X(i)$,where the precoding matrix $W(i)$ is of size $P \times \upsilon$ and $i = 0,1,...,M_{\text{symb}} - 1$,

$M_{\text{symb}} = M_{\text{layer}}$. For spatial multiplexing, the values of $W(i)$ shall be selected among the precoder elements in the codebook configured in the BS and the MS. The BS can further confine the precoder selection in the MS to a subset of the elements in the codebook using codebook subset restrictions.

3.4.1.6.4.2.2 Precoding for large delay CDD

For large-delay CDD, precoding for spatial multiplexing is defined by $Y(i) = W(i)D(i)U\,X(i)$,where the precoding matrix $W(i)$ is of size $P \times l$ and $i = 0,1,...,M_{\text{symb}} - 1$, $M_{\text{symb}} = M_{\text{layer}}$. The diagonal matrix $D(i)$ supporting cyclic delay diversity and the matrix U are different for different numbers of layers l.

Matrix U is $\frac{1}{\sqrt{2}}\begin{bmatrix} 1 & 1 \\ 1 & e^{-j2\pi/2} \end{bmatrix}$ for 2 layers, $\frac{1}{\sqrt{3}}\begin{bmatrix} 1 & 1 & 1 \\ 1 & e^{-j2\pi/3} & e^{-j4\pi/3} \\ 1 & e^{-j4\pi/3} & e^{-j8\pi/3} \end{bmatrix}$ for 3 layers and $\frac{1}{2}\begin{bmatrix} 1 & 1 & 1 & 1 \\ 1 & e^{-j2\pi/4} & e^{-j4\pi/4} & e^{-j6\pi/4} \\ 1 & e^{-j4\pi/4} & e^{-j8\pi/4} & e^{-j12\pi/4} \\ 1 & e^{-j6\pi/4} & e^{-j12\pi/4} & e^{-j18\pi/4} \end{bmatrix}$ for 4 layers. Matrix *D(i)* is $\begin{bmatrix} 1 & 0 \\ 0 & e^{-j2\pi i/2} \end{bmatrix}$ for 2 layers, $\begin{bmatrix} 1 & 0 & 0 \\ 0 & e^{-j2\pi i/3} & 0 \\ 0 & 0 & e^{-j4\pi i/3} \end{bmatrix}$ for 3 layers and $\begin{bmatrix} 1 & 0 & 0 & 0 \\ 0 & e^{-j2\pi i/4} & 0 & 0 \\ 0 & 0 & e^{-j4\pi i/4} & 0 \\ 0 & 0 & 0 & e^{-j6\pi i/4} \end{bmatrix}$ for 4 layers.

The values of the precoding matrix W shall be selected among the precoder elements in the codebook configured in the BS and the MS. The BS can further confine the precoder selection in the MS to a subset of the elements in the codebook using codebook subset restriction.

3.4.1.6.4.2.3 Codebook for precoding

For transmission on two antenna ports, the precoding matrix W shall be selected from $\frac{1}{\sqrt{2}}\begin{bmatrix}1\\1\end{bmatrix}$, $\frac{1}{\sqrt{2}}\begin{bmatrix}1\\-1\end{bmatrix}$, $\frac{1}{\sqrt{2}}\begin{bmatrix}1\\j\end{bmatrix}$ $\frac{1}{\sqrt{2}}\begin{bmatrix}1\\-j\end{bmatrix}$ or a subset thereof for 1 layer. For 2 layers, the precoding matrix $W(i)$ shall be selected from $\frac{1}{\sqrt{2}}\begin{bmatrix}1 & 0\\0 & 1\end{bmatrix}$, $\frac{1}{2}\begin{bmatrix}1 & 1\\1 & -1\end{bmatrix}$, $\frac{1}{2}\begin{bmatrix}1 & 1\\j & -j\end{bmatrix}$ or a subset thereof . For the closed-loop spatial multiplexing transmission mode, the codebook index 0 is not used when the number layers is 2. For transmission on four antenna ports, the precoding matrix W shall be selected from a 16-matrix set or a subset thereof for different layer configuration.

3.4.1.6.4.3 Precoding for transmit diversity

For 2 antennas transmit diversity,SFBC is adopted,and for 4 antennas transmit diversity,SFBC and FSTD are applied. f_i denotes the subcarrier index.

- 2 Layer SFBC-MIMO

Precoding for 2 Layer SFBC-MIMO with 2 antennas is defined as

$$\begin{bmatrix}X_1(f_1) & X_1(f_2)\\X_2(f_1) & X_2(f_2)\end{bmatrix}=\frac{1}{\sqrt{2}}\begin{bmatrix}S_1(f_1) & S_2(f_2)\\-S_2^*(f_1) & S_1^*(f_2)\end{bmatrix}$$, where * represents complex conjugate.

- 4 Layer SFBC-MIMO

Precoding for 4 Layer SFBC-MIMO with 4 antennas is defined as

$$\begin{bmatrix}X_1(f_1) & X_1(f_2) & X_1(f_3) & X_1(f_4)\\X_2(f_1) & X_2(f_2) & X_2(f_3) & X_2(f_4)\\X_3(f_1) & X_3(f_2) & X_3(f_3) & X_3(f_4)\\X_4(f_1) & X_4(f_2) & X_4(f_3) & X_4(f_4)\end{bmatrix}=\frac{1}{\sqrt{2}}\begin{bmatrix}S_1(f_1) & S_2(f_2) & 0 & 0\\0 & 0 & S_3(f_3) & S_4(f_4)\\-S_2^*(f_1) & S_1^*(f_2) & 0 & 0\\0 & 0 & -S_4^*(f_3) & S_3^*(f_4)\end{bmatrix},$$

where * represents complex conjugate.

3.4.1.6.4.4 Precoding for spatial multiplexing using antenna ports with MS-specific pilot

Precoding for spatial multiplexing using antenna ports with MS-specific pilot is only used in combination with layer mapping for spatial multiplexing. Spatial multiplexing using antenna ports with MS-specific pilot supports two antenna ports and the set of antenna ports used is $p \in \{7,8\}$.
For transmission on two antenna ports, $p \in \{7,8\}$, the precoding operation is defined by $y^{(7)}(i) = x^{(0)}(i)$ and $y^{(8)}(i) = x^{(1)}(i)$.

3.4.1.7 Symbol Mapping Method to PRU

As described in section 3.4.1.6, $X_k(t)$ represents MIMO-precoded data, where k and t mean antenna number and data number, respectively. When the number of transmission antenna is 2, $X_1(t)$ is mapped to transmission antenna 1 and $X_2(t)$ is mapped to transmission antenna 2. When the number of transmission antenna is 4, $X_1(t)$ to $X_4(t)$ are mapped to transmission antenna 1 to 4 in the same way. Since symbol mapping method of single and multiple antenna case can be considered to be the same, the following sections describe symbol mapping method to PRU for single antenna.
Symbol mapping methods depend on physical channel type (CCCH, ANCH, EXCH and CSCH) and MIMO type. Although STBC-MIMO has unique mapping method, data symbols are mapped such that lower numbered OFDM symbol, subchannel and subcarrier are occupied first, that is, data symbols are mapped along frequency axis from the earlier timing OFDM symbol in principle. The detail of the mapping method is described later.

3.4.1.7.1 Symbol Mapping Method for CCCH, ANCH and CSCH

As shown in Figure 3.38, the data symbol mapping is performed by aligning the data symbols along frequency axis, and then aligning them along time axis per PRU.

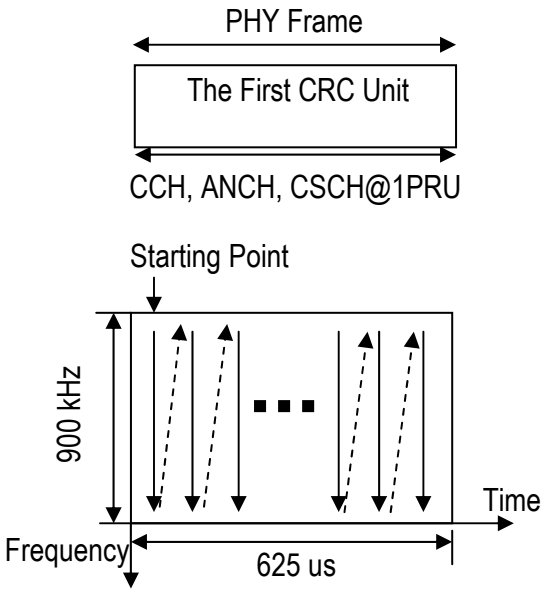

Figure 3.38 Data Symbol Mapping Method for CCCH, ANCH and CSCH

3.4.1.7.2 Symbol Mapping Method for EXCH

3.4.1.7.2.1 Symbol Mapping without DTX Symbol

As shown in Figure 3.39, the data symbol mapping is performed by aligning the data symbols along frequency axis, and then along time axis. The data symbols of the first CRC unit are inserted firstly, and the symbols of the second CRC unit are inserted next.

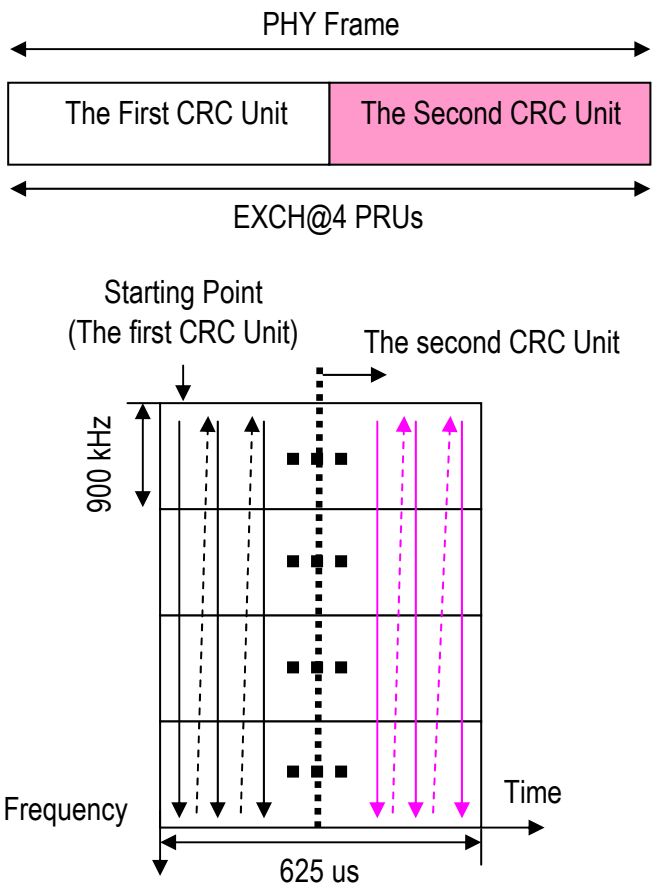

Figure 3.39 Data Symbol Mapping Method for EXCH (In Case of PRU being 4)

3.4.1.7.2.2 Symbol Mapping with DTX Symbol

DTX symbol is used in case of EXCH. As shown in Figure 3.40, when PHY frame is fewer than PRU total size, all data symbols are inserted, and then DTX symbol is inserted to the last.
The definition of DTX is described in Section 3.4.6.

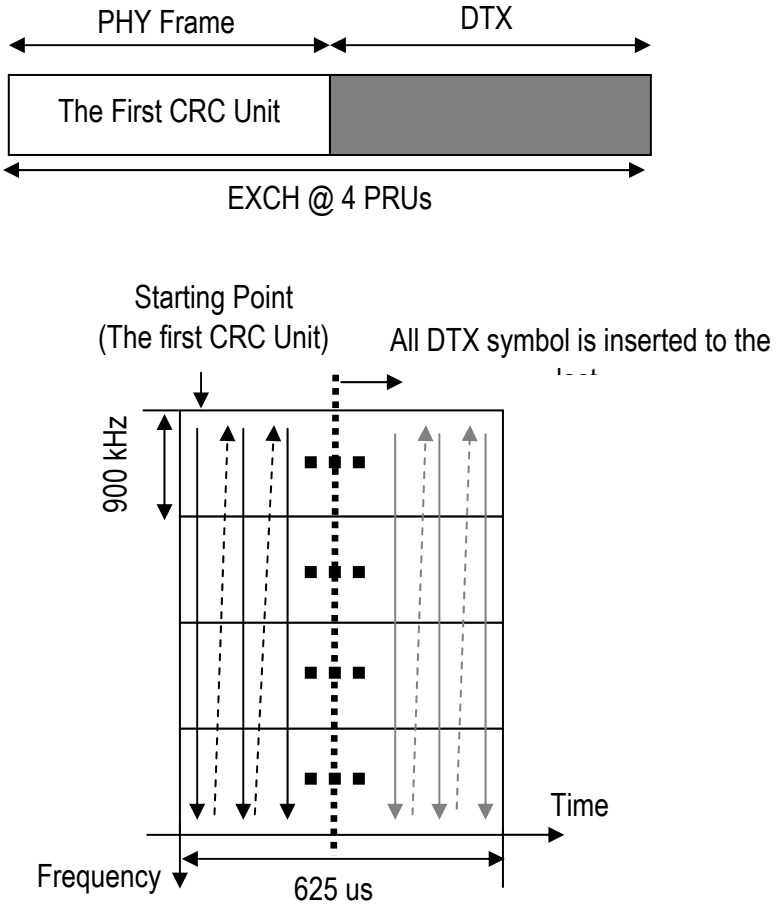

Figure 3.40 DTX Symbol Mapping Method for EXCH (In Case of PRU being 4)

3.4.1.7.3 Symbol Mapping Method for MIMO

Symbol mapping method for EXCH except for EMB-MIMO is carried out slot by slot. Symbol mapping method for EMB-MIMO is carried out within one PRU.

3.4.1.7.3.1 Symbol Mapping Method for STBC-MIMO

Data symbols except for STBC-MIMO are mapped to allocated PRU as shown in Figure 3.38, Figure 3.39. Data symbols of STBC are mapped to allocated PRU as shown in Figure 3.41. The difference from other MIMO types is that odd numbered data symbols $X_1(t_{odd})$ are mapped to even numbered OFDM symbols such as S2, S4,…, S18, and even numbered data symbols $X_1(t_{even})$ are mapped to odd numbered OFDM symbols such as S3,S5,…,S19. There is no difference in STBC symbol mapping method between 2 and 4 antenna transmissions.

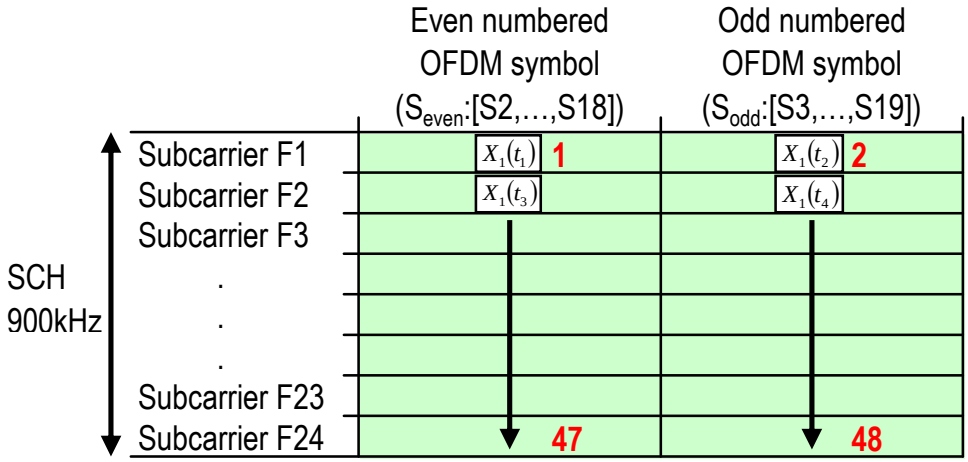

Figure 3.41 Symbol Mapping Method for STBC-MIMO

3.4.1.7.3.2 Symbol Mapping Method for SM-MIMO

Figure 3.42 shows the symbol mapping method of EXCH. Data symbol mapping method for EXCH is carried out to frequency direction independently for each slot. DTX symbol is transmitted when there is no data to be transmitted. EXCH data symbol and DTX symbol can not be transmitted from each antenna at the same time when MIMO type is SM-MIMO regarding EXCH.

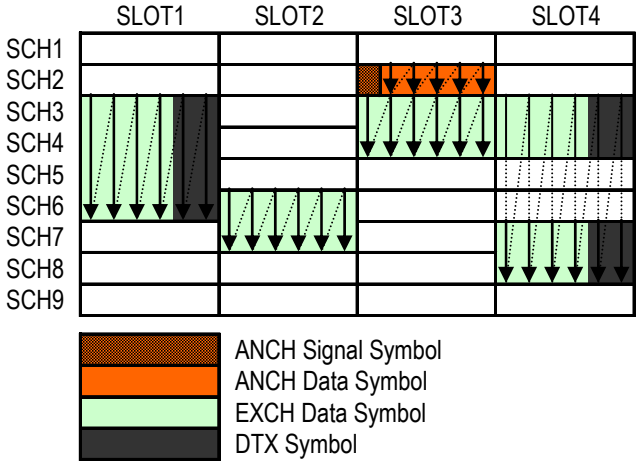

Figure 3.42 Symbol Mapping Method for SM-MIMO

3.4.1.7.3.3 Symbol Mapping Method for EMB-MIMO

Figure 3.43 shows the symbol mapping method of EXCH. Data symbol mapping method for EXCH is carried out from a SCH with smaller SCH number and smaller slot number. DTX symbol is transmitted when there is no data to be transmitted or when propagation environment is worse.

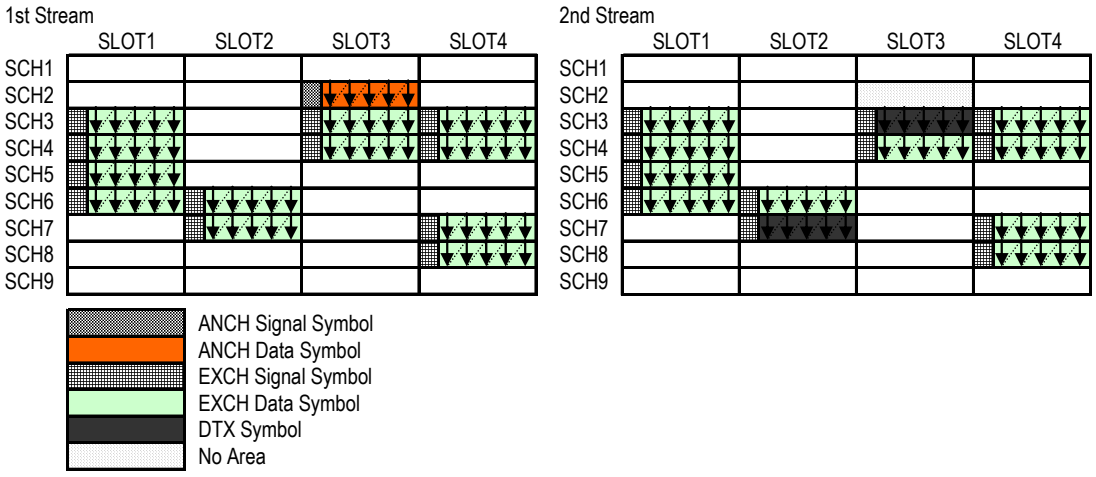

Figure 3.43 Symbol Mapping Method for EMB-MIMO

3.4.1.7.3.4 Symbol Mapping in case that p is not 0

The rest of “p=y-M*N” symbols are transmitted as DTX after data symbols are transmitted in one CRC unit in case that p is not 0.

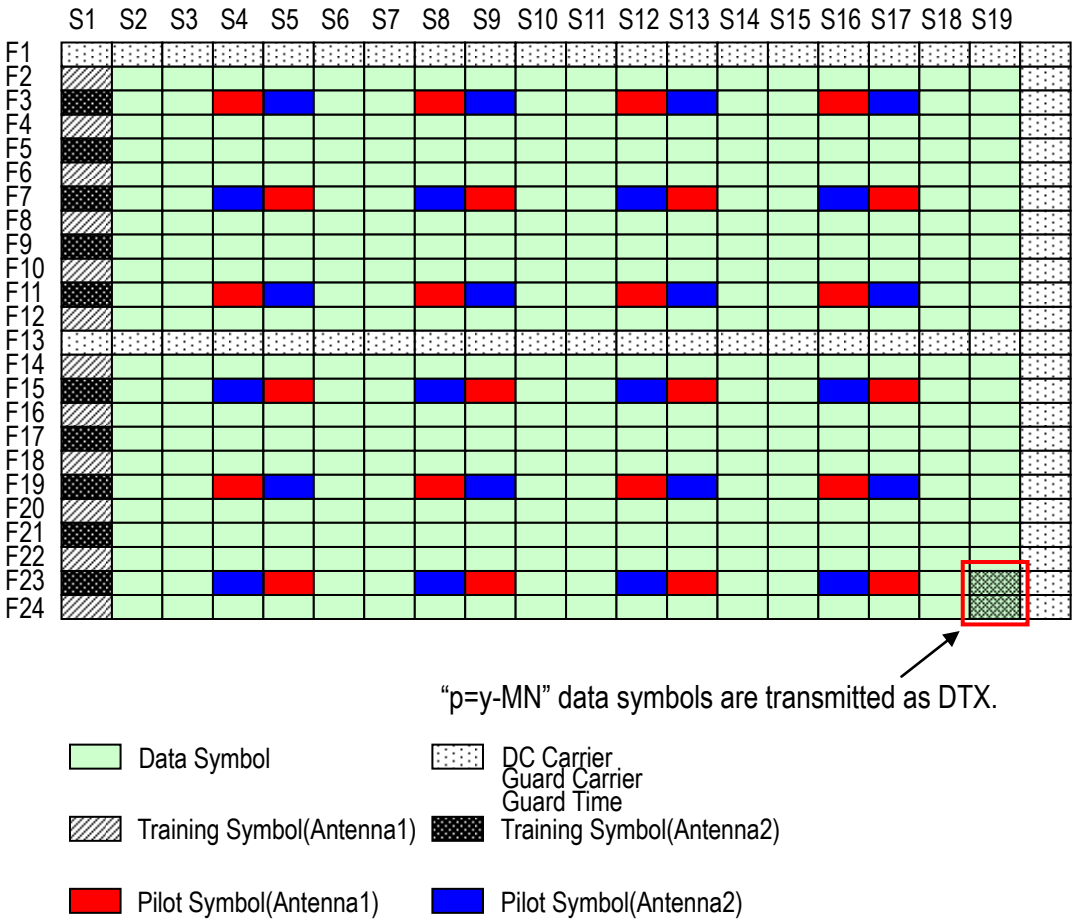

Figure 3.44 Symbol Mapping in case that p is not 0

3.4.1.7.4 Symbol Mapping Method for Retransmission of CC-HARQ

3.4.1.7.4.1 Symbol Mapping Method except for EMB-MIMO

In case of EXCH retransmission, the retransmission data is mapped in an order from a head by each layer and each slot. The example of retransmission by only 1 layer is shown in Figure 3.45. The example of retransmission by some layers is shown in Figure 3.46.

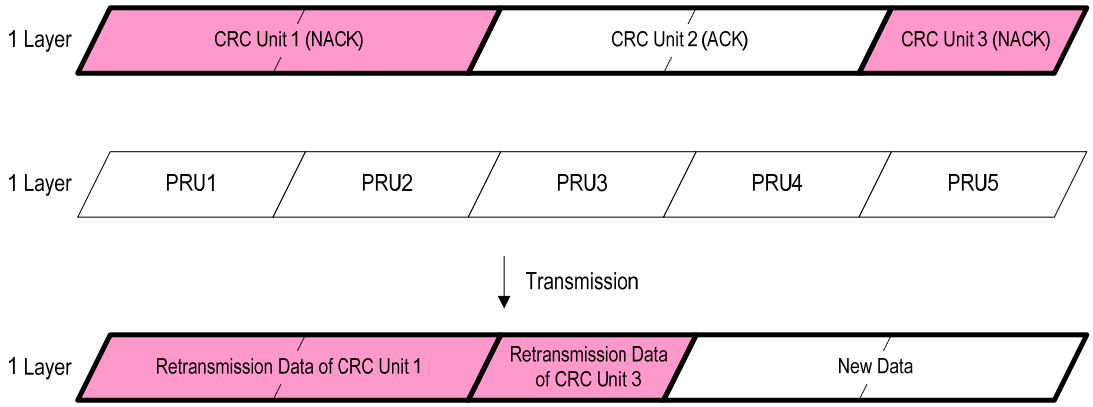

Figure 3.45 In case of Retransmission of except for EMB-MIMO(only 1 layer)

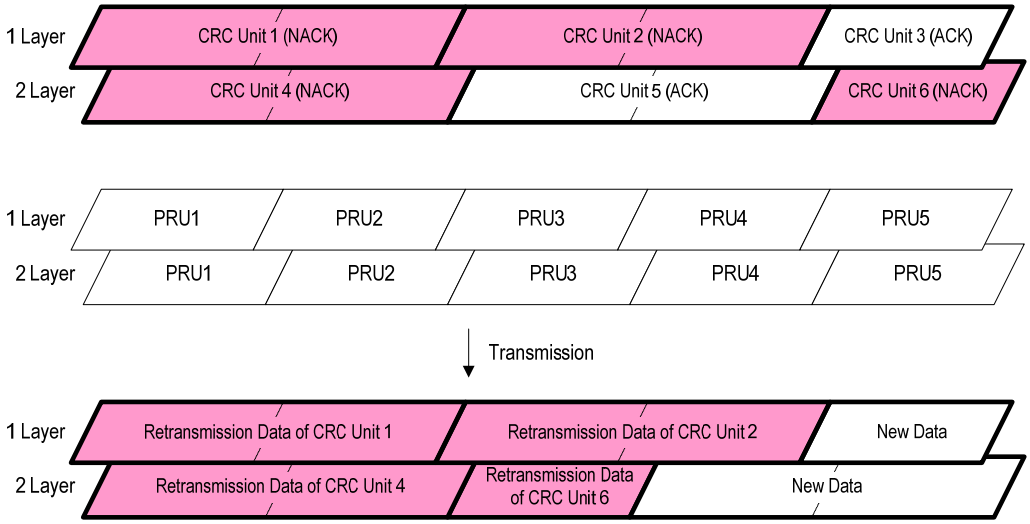

Figure 3.46 In case of Retransmission of except for EMB-MIMO(some layers)

3.4.1.7.4.2 Symbol Mapping Method for EMB-MIMO

In case of EXCH retransmission, EMB-MIMO is retransmitted by each PRU. The example of retransmission of EMB-MIMO is shown in Figure 3.47.

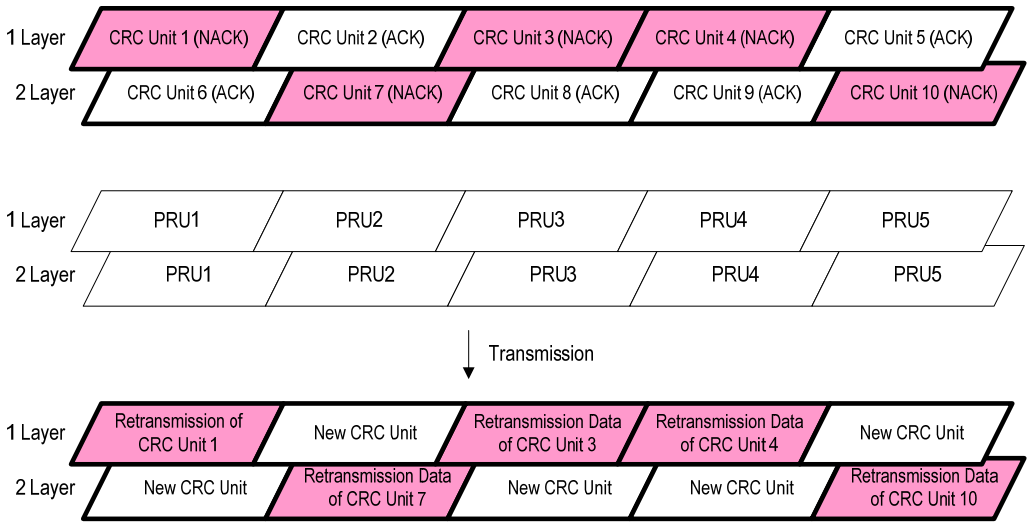

Figure 3.47 In case of Retransmission of EMB-MIMO

3.4.1.7.4.3 Symbol Mapping Method in case of full subcarrier mode

It is necessary to consider full subcarrier mode except for EMB-MIMO. The retransmission CRC unit size is not necessarily the same as the PRU size in case of PRU allocation. (a) explains the case that the retransmission CRC unit size equals to the retransmission PRU size. (b) explains the case that the retransmission CRC unit size is smaller than the retransmission PRU size. (c) explains the case that the retransmission CRC unit size is larger than the retransmission PRU size.

(a) The case when Retransmission CRC Unit Size equals to Retransmission PRU Size
Figure 3.48 and Figure 3.49 illustrate the case that retransmission CRC unit size equals to the retransmission PRU size. Figure 3.48 shows the case that retransmission data 2 and PRU size 2 equal to retransmission data 1 and PRU size 1. Figure 3.49 shows the case that retransmission data1 and PRU size 1 differ from retransmission data 2 and PRU size 2, when full subcarrier mode is used.

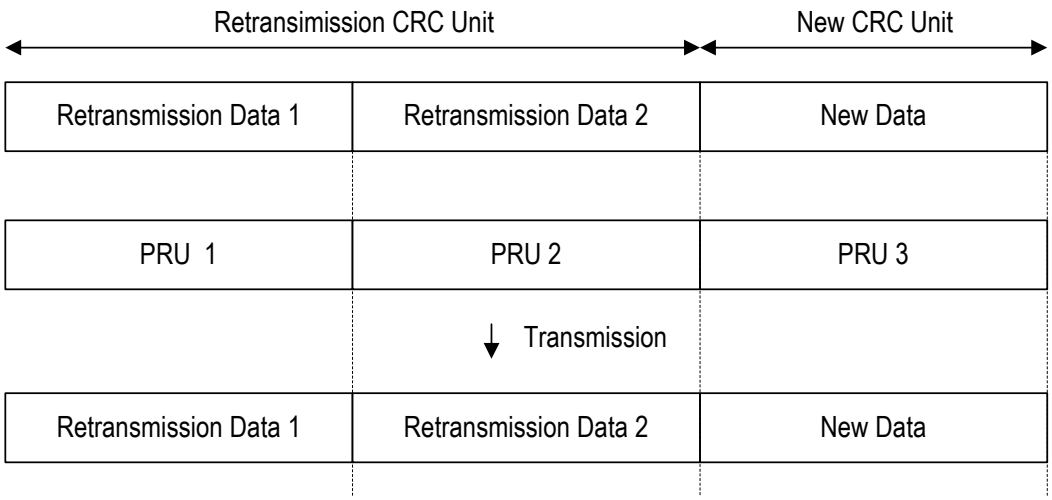

Figure 3.48 The case when Retransmission CRC Unit Size equals to Retransmission PRU Size (1)

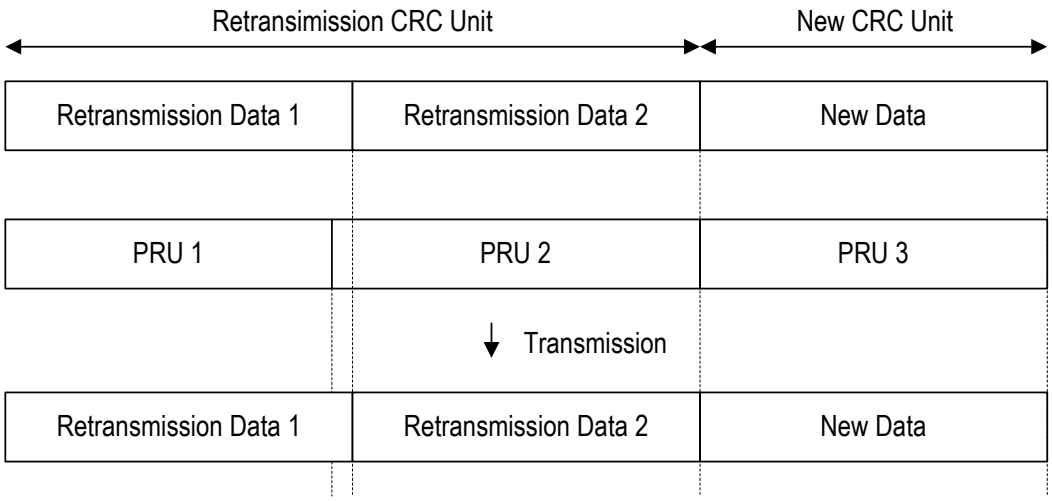

Figure 3.49 The case when Retransmission CRC Unit Size equals to Retransmission PRU Size (2)

(b) The case when Retransmission CRC Unit Size is smaller than Retransmission PRU Size

Figure 3.50 illustrates the case that retransmission CRC unit size is smaller than retransmission PRU size. As shown in this figure, the rest of PRU 4 is used as DTX symbols.

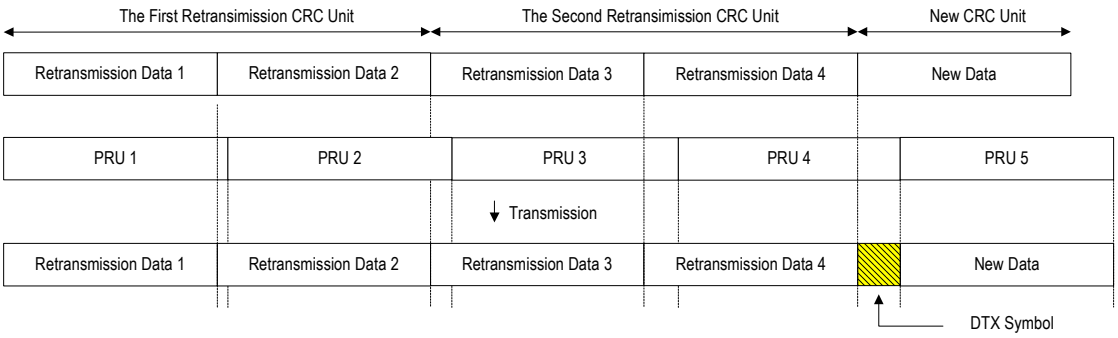

Figure 3.50 The case when Retransmission CRC Unit Size is smaller than Retransmission PRU Size

(c) The case when Retransmission CRC Unit Size is larger than Retransmission PRU Size

Figure 3.51 illustrates the case that retransmission CRC unit size is larger than retransmission PRU size. As shown in the figure, a part of retransmission data 4 takes up the symbols that can be used by DTX symbols. In addition, a part of retransmission data 4 might also take up a part of the guard time.

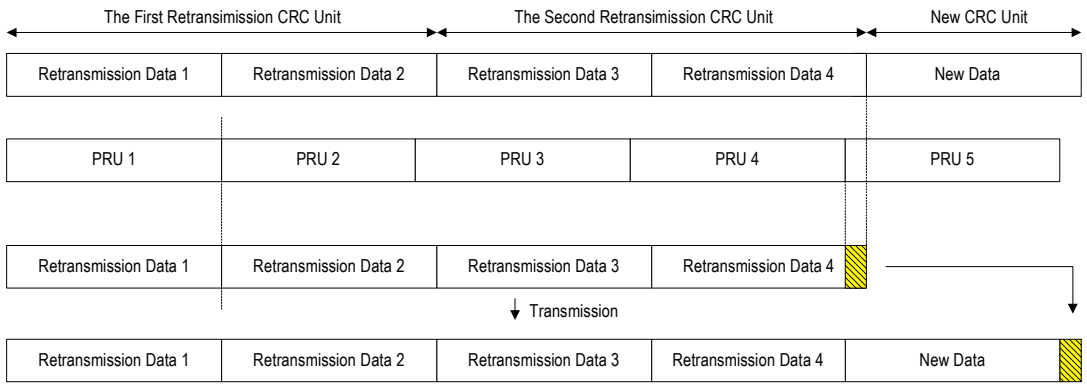

Figure 3.51 The case when Retransmission CRC Unit Size is lager than Retransmission PRU Size

3.4.1.7.5 Symbol Mapping Method to PRU for Optional Physical Channel

3.4.1.7.5.1 Advanced Physical broadcast channel

The block of complex-valued symbols $y^{(p)}(i)$ with length M_{symb} for each antenna port is transmitted during 4 consecutive radio frames starting in each radio frame fulfilling $n_{\mathrm{f}} \bmod 4 = 0$ and shall be mapped in sequence starting with $y(0)$ to resource elements (k,l). The mapping to resource elements (k,l) not reserved for transmission of pilots shall be in increasing order of first the index k, then the index l in slot 1 in slot 0 and finally the radio frame number. The resource-element indices are given by

$$k = \frac{N_{\mathrm{RU}}^{\mathrm{DL}} N_{\mathrm{sc}}^{\mathrm{RU}}}{2} - 36 + k', \qquad k' = 0,1,\ldots,71,\ l = 0,1,\ldots,3$$

where resource units reserved for pilots shall be excluded. The mapping operation shall assume BS-specific pilots for antenna ports 0-3 being present irrespective of the actual configuration. The MS shall assume that the resource units assumed to be reserved for pilots in the mapping operation above but not used for transmission of pilot are not available for ADEDCH transmission.

3.4.1.7.5.2 Advanced Downlink ECCH Format Indicator Channel

The mapping to resource units is defined in terms of quadruplets of complex-valued symbols. For each of the antenna ports, symbol quadruplets $A^{(p)}(i) = \left\langle y^{(p)}(4i), y^{(p)}(4i+1), y^{(p)}(4i+2), y^{(p)}(4i+3) \right\rangle$ shall be mapped in increasing order of i to the four resource-point groups in the first OFDM symbol in a downlink slot with the representative resource-unit. $A^{(p)}(i)$ is mapped to the resource-unit group represented by $k = \bar{k} + \lfloor i \cdot N_{RU}^{DL} / 2 \rfloor \cdot N_{SC}^{RU} / 2$, where $\bar{k} = \left(N_{\mathrm{sc}}^{\mathrm{RU}} / 2\right) \cdot \left(N_{\mathrm{ID}}^{\mathrm{BS}} \bmod 2N_{\mathrm{RU}}^{\mathrm{DL}}\right)$ and $N_{\mathrm{ID}}^{\mathrm{BS}}$ is the physical-layer BS identity.

3.4.1.7.5.3 Advanced Downlink ECCH

The mapping to resource units is defined by operations on quadruplets of complex-valued symbols.The block of quadruplets $A^{(p)}(0),\ldots,A^{(p)}(M_{\mathrm{quad}}-1)$ shall be permuted resulting in $w^{(p)}(0),\ldots,w^{(p)}(M_{\mathrm{quad}}-1)$. The block of quadruplets $w^{(p)}$ shall be cyclically shifted, resulting in $\overline{w}^{(p)}$, where $M_{\mathrm{quad}} = M_{\mathrm{symb}} / 4$ and $\overline{w}^{(p)}(i) = w^{(p)}((i + N_{ID}^{BS}) \bmod M_{quad})$.

Mapping of the block of quadruplets $\overline{w}^{(p)}$ is defined in terms of resource-point groups, according to steps as shown in Figure 3.52:

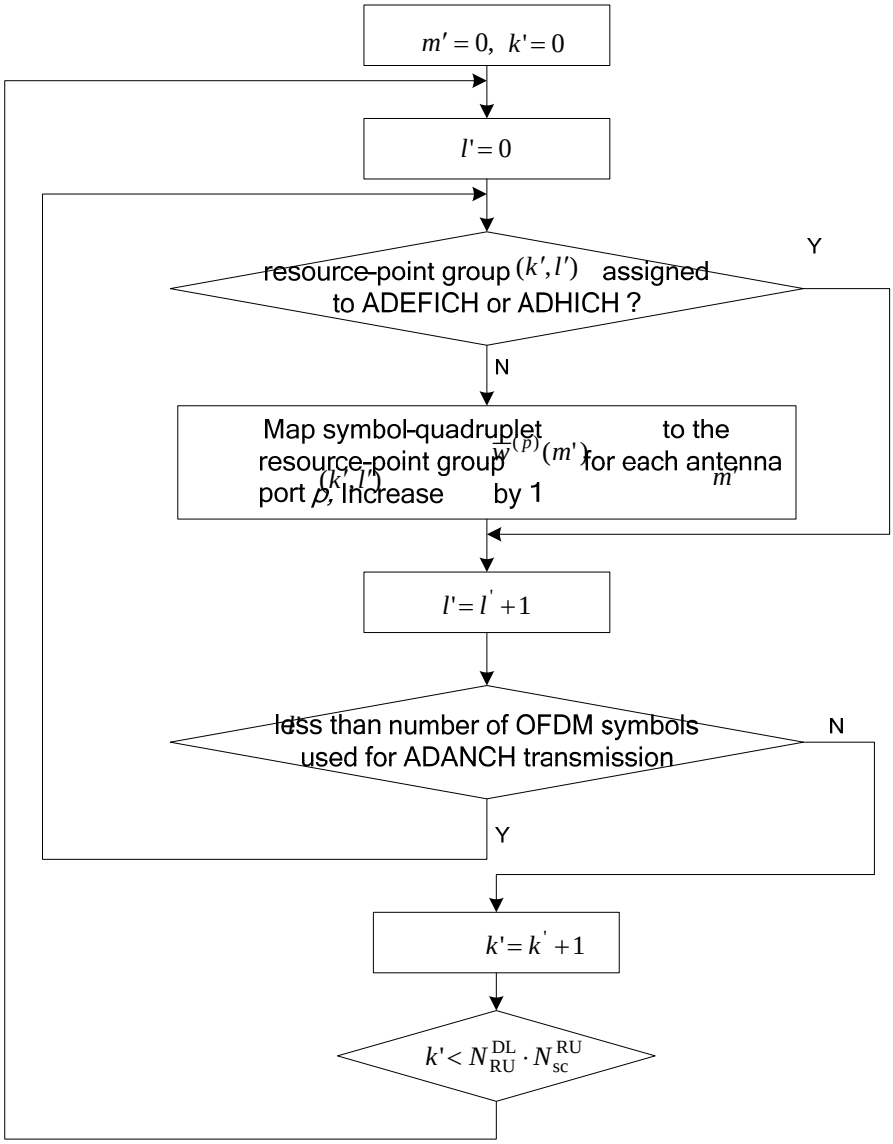

Figure 3.52 Mapping of the block of quadruplets $\overline{w}^{(p)}$

3.4.1.7.5.4 Advanced Downlink Hybrid-ARQ Indicator Channel

The sequence $\overline{y}^{(p)}(n)$ with length M_{symb} for each of the ADHICH groups is the sum is over all ADHICHs in the ADHICH group $y_i^{(p)}(n)$, where $y_i^{(p)}(n)$ represents the symbol sequence from the i ADHICH in the ADHICH group.ADHICH groups are mapped to ADHICH mapping units. The mapping of ADHICH group m to ADHICH mapping unit m' is defined by $\tilde{y}_{m'}^{(p)}(n) = \overline{y}_m^{(p)}(n)$

Where $m' = m = 0,1,\ldots,m_i \cdot N_{\mathrm{ADHICH}}^{\mathrm{group}} - 1$, mi equals to 1 for normal ADHICH duration and equals

to 2 (slot 1 and 6) or 3 (other slots) for extend ADHICH duration. The ADHICH duration is configurable by higher layers. The duration configured puts a lower limit on the size of the control region signalled by the ADEFICH.

Mapping $A^{(p)}(i) = \langle \tilde{y}^{(p)}(4i), \tilde{y}^{(p)}(4i+1), \tilde{y}^{(p)}(4i+2), \tilde{y}^{(p)}(4i+3) \rangle$ to resource units is defined in terms of symbol quadruplets according to steps as below:

1) Number the resource-point groups not assigned to ADEFICH in OFDM symbol l' from 0 to $n_{l'} - 1$, starting from the resource-point group with the lowest frequency-domain index.

2) Symbol-quadruplet $A^{(p)}(i)$ from ADHICH mapping unit m' is mapped to the resource-point group represented by $(k', l')_i$,where the indices $k_i' = (\lfloor N_{\mathrm{ID}}^{\mathrm{BS}} \cdot n_{l_i'} / n_1 \rfloor + m' + \lfloor i \cdot n_{l_i'} / 3 \rfloor) \bmod n_{l_i'}$, l_i' equals to 0 for normal ADHICH duration and equals to $(\lfloor m' / 2 \rfloor + i + 1) \bmod 2$ for extended ADHICH in slot 1,6 and equals to *i* for other cases.

3.4.1.8 Summary of OFDM DL Channel Coding

Combinations of coding and modulation are shown in Table 3.12. Also, the efficiency of each combination is shown in the same table.
The OFDM DL channel coding for XGP is summarized in Table 3.12.

Table 3.12 Summary of OFDM DL Channel Coding

Modulation	Scaling Factor	Coding rate R1 @convolutional coding	Puncturing rate R2	Coding rate R @total	Efficiency
BPSK	1	1 / 2	1	1 / 2	0.5
			3 / 4	2 / 3	0.67
QPSK	1/√2		1	1 / 2	1
			4 / 6	3 / 4	1.5
16QAM	1/√10		1	1 / 2	2
			4 / 6	3 / 4	3
64QAM	1/√42		3 / 4	4 / 6	4
			6 / 10	5 / 6	5
256QAM	1/√170		4 / 6	6 / 8	6
			8 / 14	7 / 8	7

3.4.2 Training Format for DL OFDM

Training format is used mainly for synchronization, frequency offset estimation, automatic gain control or weight calculation of beam-forming. Training format is composed of pre-defined data (Refer to Appendix C.1). The details of training format, training sequence, and training pattern are described in Sections 3.4.2.1, 3.4.2.2 and 3.4.2.3.

3.4.2.1 Training Format

Training format is used for ICH and CCCH as described in Sections 3.4.2.1.1 and 3.4.2.1.2. Training format for ICH and the format for CCCH are chosen according to the training index as defined in Section 3.4.2.3.

3.4.2.1.1 Training Format for ICH

ICH is composed of ANCH, EXCH and CSCH. As shown in Figure 3.53, 1/4 or 1/2 of the original training data is copied ahead of the data. This training format is used for ICH. As described in Sections 3.4.8.1.2 and 3.5.6.1.2, training symbol S1 is used for ICH.

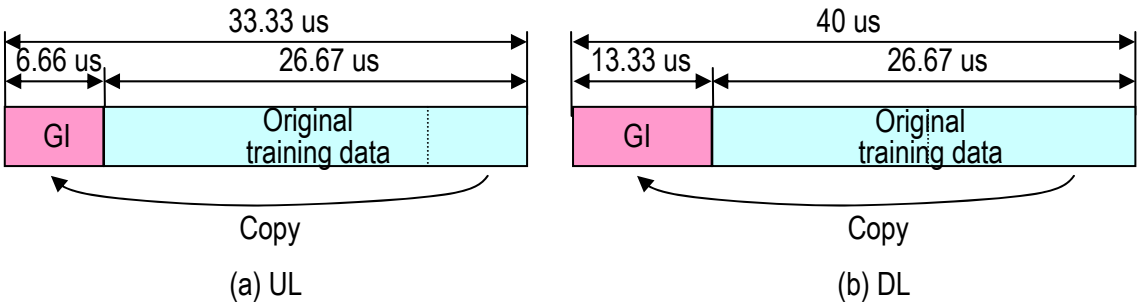

Figure 3.53 Training Format for Single Symbol (S1)

3.4.2.1.2 Training Format for CCCH

As shown in Figure 3.54, 3/8 or 5/8 of the original training data (the second OFDM data) is copied ahead of the first OFDM data. The phase of this format must be consecutive. As described in Sections 3.4.8.1.1 and 3.5.6.1.1, training symbols S1 and S2 are used for CCCH.

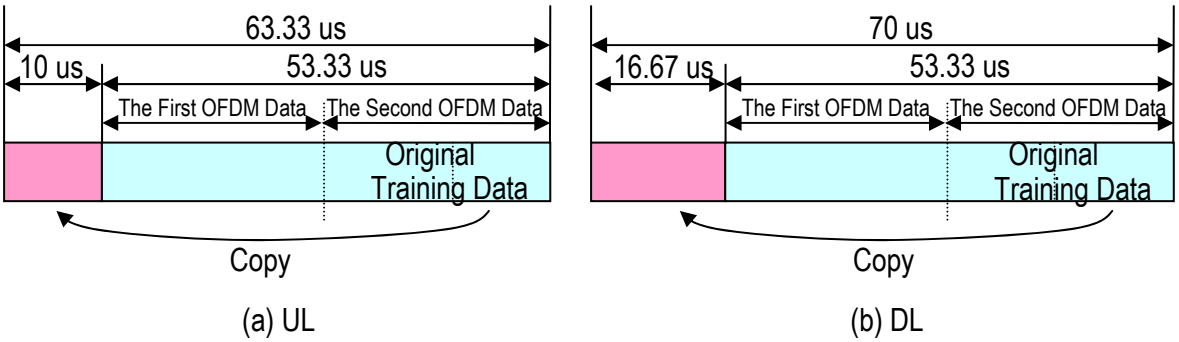

Figure 3.54 Training Format for Two Symbols

3.4.2.2 Training Sequence

The training sequence of each SCH is decided by the training core-sequence number and the offset value number that is described in Sections 3.4.2.3.1 and 3.4.2.3.2. The calculated core-sequence is chosen from 12 core-sequences defined in Table C.1 to Table C.3 in Appendix C. The calculated offset value number chooses the offset sample as shown in Table C.4. The offset sample shifts the core-sequence cyclically. To generate the training sequence of each SCH, the core-sequence and the offset sample are substituted in Equation C.1. The example of generation is shown in Table C.5. When offset value number is 1, the training sequence becomes the same as the core-sequence. Offset value depends on the number of SCHs. Training symbol should be boosted by 2.5 dB (=4/3) compared with data symbol. And further boosting power(over 2.5dB) is optional in case that MCS is lower as BPSK and QPSK.

3.4.2.3 Training Index

As described in Section 3.4.2.2, there are 12 core-sequences and offset values (cyclic-shift values). Training index is numbered as follows:
Training Index = Core-sequence Number + (Offset Value Number-1)*12

3.4.2.3.1 Training Index for CCCH

Training index, core-sequence number and offset value number for CCCH are defined as follows:

Training Index : 2 for UL, 1 for DL
Core-sequence Number : 2 for UL, 1 for DL
Offset Value Number : 1

3.4.2.3.2 Training Index for ICH

3.4.2.3.2.1 Training Index for SISO

Training index, core-sequence number and offset value number for ICH are defined as follows:

Training Index : (x + (y-1)*12
Core-sequence Number : x=[A MOD 12] + 1
Offset Value Number : y(m)=[{B + m} MOD (n-1)] + 2
n = maximum number of SCHs in a slot
m = SCH number : 1, 2,…,n
A = 1st to 5th bits including LSB in BSID
B = 1st to 5th bits next to A in BSID

3.4.2.3.2.2 Training Index for MIMO

Training index, core sequence number and offset value number for MIMO are defined as follows:

Training index : x + (y-1)*12
Core-sequence number : x(k)=[{A + k -1} MOD 12] + 1
Offset value number : y(m)=[{B + m} MOD (n-1)] + 2
k = SDMA-MIMO stream number (k=1,2,…)
n = maximum number of SCH in a slot
m = SCH number : 2,…,n
A = 1st to 5th bits including LSB in BSID
B = 1st to 5th bits next to A in BSID

Note: The parameter k is used only for SDMA-MIMO. In other cases, SM-MIMO, EMB-MIMO and STBC-MIMO,k is 1 regardless of MIMO stream number.

3.4.2.3.2.3 Training Layer Mapping for MIMO

The generated training pattern is mapped to each layer, as shown in Figure 3.55. Figure 3.56 shows method of training layer mapping except for full subcarrier mode. Figure 3.57 shows method of training layer mapping for full subcarrier mode.

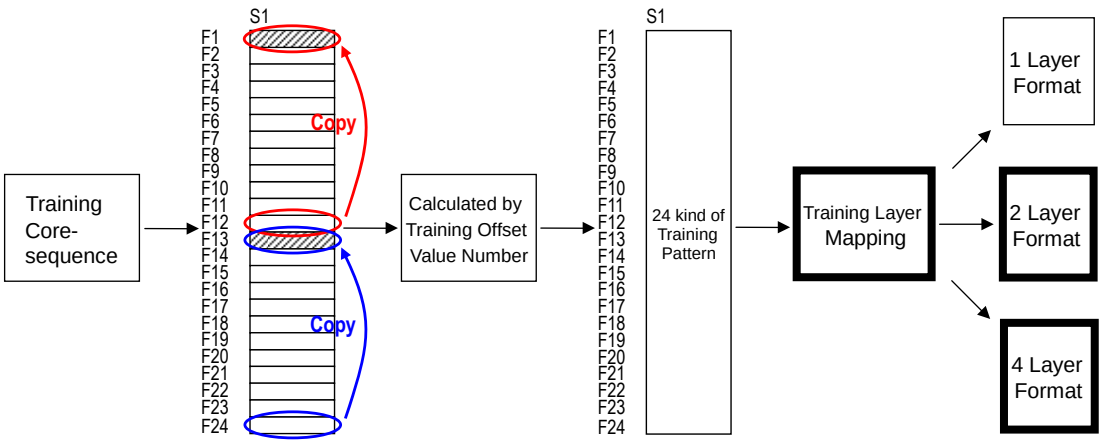

Figure 3.55 Training Layer Mapping for MIMO

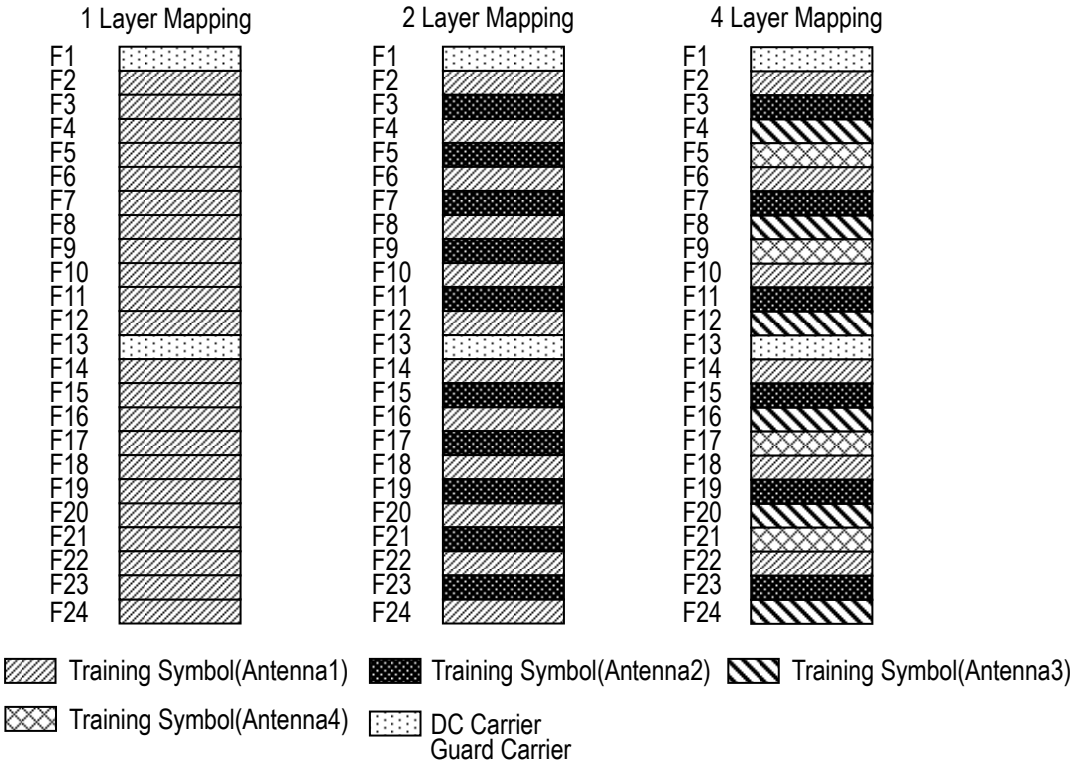

Figure 3.56 Training Layer Mapping for MIMO except for full subcarrier mode

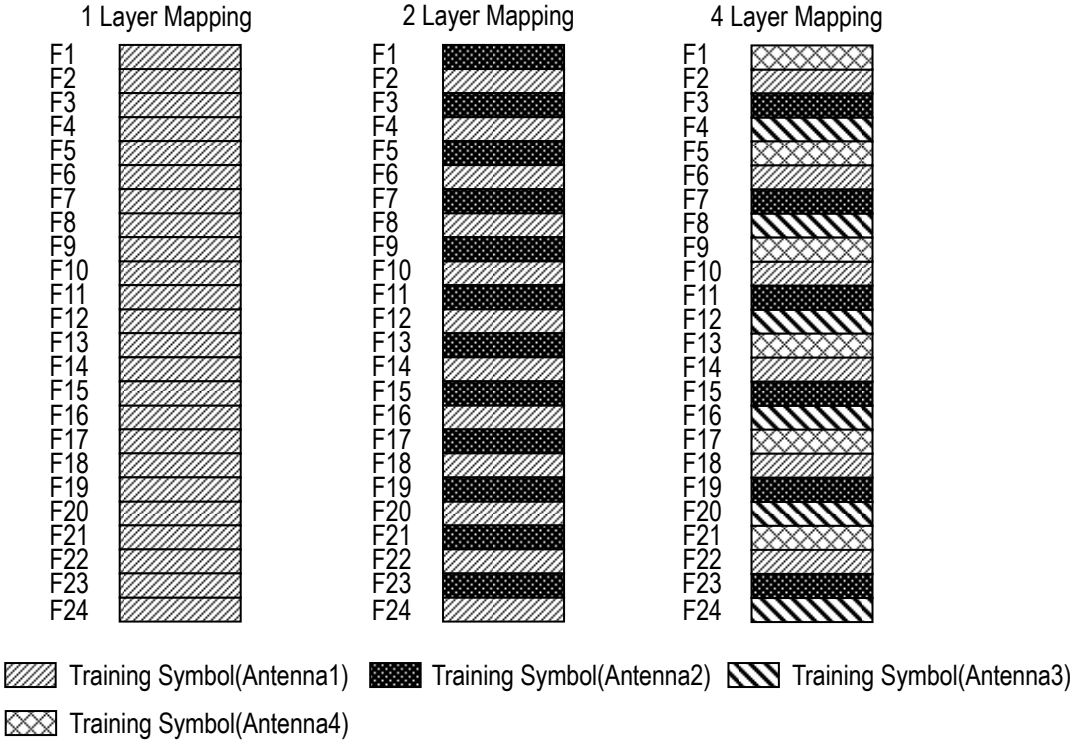

Figure 3.57 Training Layer Mapping for MIMO for full subcarrier mode

3.4.2.4 Advanced Synchronization Signal

3.4.2.4.1 Advanced primary synchronization signal

3.4.2.4.1.1 Sequence generation

The sequence $d(n)$ used for the advanced primary synchronization signal is generated from a frequency-domain Zadoff-Chu sequence according to

$$d_u(n) = \begin{cases} e^{-j\frac{\pi un(n+1)}{63}} & n = 0,1,...,30 \\ e^{-j\frac{\pi u(n+1)(n+2)}{63}} & n = 31,32,...,61 \end{cases}$$

where the Zadoff-Chu root sequence index u is 25, 29 and 34 for N_{ID} =0,1,2 repectively.

3.4.2.4.1.2 Mapping to resource units

The mapping of the sequence to resource units depends on the frame structure. The MS shall not assume that the advanced primary synchronization signal is transmitted on the same antenna port as any of the downlink pilots. The MS shall not assume that any transmission instance of the advanced primary synchronization signal is transmitted on the same antenna port, or ports used for any other transmission instance of the advanced primary synchronization signal.

The sequence $d(n)$ shall be mapped to the resource elements according to

$$a_{k,l} = d(n), \quad n = 0,...,61, k = n - 31 + \frac{N_{\mathrm{RU}}^{\mathrm{DL}} N_{\mathrm{sc}}^{\mathrm{RU}}}{2}$$

The advanced primary synchronization signal shall be mapped to the third OFDM symbol in slots 1 and 6. Resource elements (k,l) in the OFDM symbols used for transmission of the advanced primary synchronization signal where

$$k = n - 31 + \frac{N_{\mathrm{RU}}^{\mathrm{DL}} N_{\mathrm{sc}}^{\mathrm{RU}}}{2}, n = -5,-4,...,-1,62,63,...66$$

are reserved and not used for transmission of the advanced primary synchronization signal.

3.4.2.4.2 Advanced secondary synchronization signal

3.4.2.4.2.1 Sequence generation

The sequence $d(0),...,d(61)$ used for the advanced second synchronization signal is an interleaved concatenation of two length-31 binary sequences. The concatenated sequence is

scrambled with a scrambling sequence given by the advanced primary synchronization signal. The combination of two length-31 sequences defining the secondary synchronization signal is $d(2n) = s_0^{(m_0)}(n)c_0(n)$, $d(2n+1) = s_1^{(m_1)}(n)c_1(n)z_1^{(m_0)}(n)$ for slot 0 and $d(2n) = s_1^{(m_1)}(n)c_0(n)$, $d(2n+1) = s_0^{(m_0)}(n)c_1(n)z_1^{(m_1)}(n)$ for slot 5,where $0 \le n \le 30$. The indices m_0 and m_1 are derived from the physical-layer BS-identification group $N_{\mathrm{ID}}^{(1)}$.

The two sequences $s_0^{(m_0)}(n)$ and $s_1^{(m_1)}(n)$ are defined as two different cyclic shifts of the m-sequence $\tilde{s}(n)$ according to $s_0^{(m_0)}(n) = \tilde{s}\left((n+m_0) \bmod 31\right)$ and $s_1^{(m_1)}(n) = \tilde{s}\left((n+m_1) \bmod 31\right)$, where $\tilde{s}(i) = 1-2x(i)$, $0 \le i \le 30$ .The two scrambling sequences $c_0(n)$ and $c_1(n)$ depend on the advanced primary synchronization signal and are defined by two different cyclic shifts of the m-sequence $\tilde{c}(n)$ according to $c_0(n) = \tilde{c}((n+N_{\mathrm{ID}}^{(2)}) \bmod 31)$ and $c_1(n) = \tilde{c}((n+N_{\mathrm{ID}}^{(2)}+3) \bmod 31)$, where $N_{\mathrm{ID}}^{(2)} \in \{0,1,2\}$ is the physical-layer identification within the physical-layer BS identification group $N_{\mathrm{ID}}^{(1)}$ and $\tilde{c}(i) = 1-2x(i)$, $0 \le i \le 30$. $x(i)$ is defined by $x(\bar{i}+5) = \left(x(\bar{i}+3) + x(\bar{i})\right) \bmod 2, 0 \le \bar{i} \le 25$

with initial conditions $x(0) = 0, \quad x(1) = 0, \quad x(2) = 0, \quad x(3) = 0, \quad x(4) = 1$.

The scrambling sequences $z_1^{(m_0)}(n)$ and $z_1^{(m_1)}(n)$ are defined by a cyclic shift of the m-sequence $\tilde{z}(n)$ according to $z_1^{(m_0)}(n) = \tilde{z}((n+(m_0 \bmod 8)) \bmod 31)$ and $z_1^{(m_1)}(n) = \tilde{z}((n+(m_1 \bmod 8)) \bmod 31)$.

3.4.2.4.2.2 Mapping to resource elements

In a half-frame, the same antenna port as for the advanced primary synchronization signal shall be used for the advanced secondary synchronization signal. The sequence $d(n)$ shall be mapped to resource elements according to:

$$\alpha_{k,l} = d(n), n = 0,...,61;\ k = n - 31 + \frac{N_{RU}^{DL} N_{sc}^{RU}}{2}, l = N_{symb}^{DL} - 1$$

3.4.3 Pilot for DL OFDM

Pilot is used mainly for channel estimation. Pilot symbol is identical to the training symbol in the same subcarrier in a PRU. Pilot symbol should be boosted by 2.5 dB (=4/3) compared with data symbol. And further boosting power(over 2.5dB) is optional in case that MCS is lower as BPSK and QPSK.

3.4.3.1 Pilot for DL CCCH

Pilot symbol uses the same training index for CCH. As described in Section 3.4.8.1.1, Pilot symbols (S3- S19) in the same subcarrier (F7 and F19) copy training symbol S2. Pilot symbols (S5, S9, S13 and S17) in the same subcarrier (F3, F11, F15 and F23) copy training symbol S2.

3.4.3.2 Pilot for DL ICH

ICH is composed of ANCH, EXCH and CSCH. Pilot symbol uses the same training index for ICH. Pilot symbols (S5, S9 S13 and S17) in the same subcarrier (F3, F7, F11, F15, F19 and F23) copy training symbol S1.

3.4.3.3 Optional Pilots for DL OFDM

Three types of optional downlink pilots are defined:BS-specific pilots, MS-specific pilots and Positioning pilots

There is one pilot transmitted per downlink antenna port.

3.4.3.3.1 BS-specific pilots

BS-specific pilots shall be transmitted in all downlink slots in a BS supporting ADEDCH transmission.BS-specific pilots are transmitted on one or several of antenna ports 0 to 3.

3.4.3.3.1.1 Sequence generation

The reference-signal sequence $r_{l,n_s}(m)$ is defined by

$$r_{l,n_s}(m) = \frac{1}{\sqrt{2}}\left(1-2\cdot c(2m)\right) + j\frac{1}{\sqrt{2}}\left(1-2\cdot c(2m+1)\right), \quad m = 0,1,\ldots,2N_{\mathrm{RU}}^{\max,\mathrm{DL}}-1$$

where n_s is the half slot number within a radio frame and l is the OFDM symbol number within the half slot. The pseudo-random sequence generator shall be initialised with $c_{\mathrm{init}} = 2^{10}\cdot\left(7\cdot\left(n_s+1\right)+l+1\right)\cdot\left(2\cdot N_{ID}^{BS}+1\right)+2\cdot N_{ID}^{BS}+N_{GI}$ at the start of each OFDM symbol where $N_{GI}=1$.

3.4.3.3.1.2 Mapping to resource elements

The pilot sequence $r_{l,n_s}(m)$ shall be mapped to complex-valued modulation symbols $a_{k,l}^{(p)}$ used as reference symbols for antenna port p in half slot n_s according to $a_{k,l}^{(p)} = r_{l,n_s}(m')$, where $k = 6m + (v + v_{\text{shift}}) \bmod 6$, $m = 0,1,...,2 \cdot N_{\text{RU}}^{\text{DL}} - 1$, $m' = m + N_{\text{RU}}^{\max,\text{DL}} - N_{\text{RU}}^{\text{DL}}$ and $l = \begin{cases} 0, N_{\text{symb}}^{\text{DL}} - 3 & \text{if } p \in \{0,1\} \\ 1 & \text{if } p \in \{2,3\} \end{cases}$.

The variables v and v_{shift} define the position in the frequency domain for the different pilots where v is given by $v = 0$ if $p = 0$ and $l = 0$ and if $p = 1$ and $l \neq 0$, $v = 3$ if $p = 0$ and $l \neq 0$ and if $p = 1$ and $l = 0$, $v = 3(n_s \bmod 2)$ if $p = 2$, $v = 3 + 3(n_s \bmod 2)$ if $p = 3$.The BS-specific frequency shift is given by $v_{\text{shift}} = N_{\text{ID}}^{\text{BS}} \bmod 6$.

Resource units (k,l) used for pilot transmission on any of the antenna ports in a half slot shall not be used for any transmission on any other antenna port in the same half slot and set to zero.

3.4.3.3.2 MS-specific pilots

MS-specific pilots are supported for single-antenna-port transmission of ADEDCH and are transmitted on antenna port 5, 7, or 8. MS-specific pilots are also supported for spatial multiplexing on antenna ports 7 and 8. MS specific pilots are present and are a valid reference for ADEDCH demodulation only if the ADEDCH transmission is associated with the corresponding antenna port. MS-specific pilots are transmitted only on the resource units upon which the corresponding ADEDCH is mapped. The MS-specific pilot is not transmitted in resource elements (k,l) in which one of the physical channels or physical signals other than MS-specific pilot defined in 6.1 are transmitted using resource elements with the same index pair (k,l) regardless of their antenna port p.

3.4.3.3.2.1 Sequence generation

For antenna port 5, the MS-specific reference-signal sequence $r_{n_s}(m)$ is defined by

$$r_{n_s}(m) = \frac{1}{\sqrt{2}}(1 - 2 \cdot c(2m)) + j\frac{1}{\sqrt{2}}(1 - 2 \cdot c(2m+1)), \qquad m = 0,1,...,12N_{\text{RU}}^{\text{ADEDCH}} - 1$$

where $N_{\text{RU}}^{\text{ADEDCH}}$ denotes the bandwidth in resource units of the corresponding ADEDCH transmission. The pseudo-random sequence generator shall be initialised with $C_{init} = (\lfloor n_s / 2 \rfloor + 1) \cdot (2N_{ID}^{BS} + 1) \cdot 2^{16} + n_{MSID}$ at the start of each slot.

For antenna ports 7 and 8, the reference-signal sequence $r(m)$ is defined by

$$r(m) = \frac{1}{\sqrt{2}}\left(1-2\cdot c(2m)\right) + j\frac{1}{\sqrt{2}}\left(1-2\cdot c(2m+1)\right), \qquad m = 0,1,\ldots,12N_{\mathrm{RU}}^{\max,\mathrm{DL}}-1 .$$

The pseudo-random sequence generator shall be initialised with $c_{\mathrm{init}} = \left(\lfloor n_s/2 \rfloor + 1\right)\cdot\left(2N_{\mathrm{ID}}^{\mathrm{BS}}+1\right)\cdot 2^{16} + n_{\mathrm{SCID}}$ at the start of each slot, where n_{SCID} is 0 or 1 according to the most recent ADECI format 2B associated with the ADEDCH transmission. If there is no ADECI format 2B associated with the ADEDCH transmission, the MS shall assume that n_{SCID} is zero.

3.4.3.3.2.2 Mapping to resource elements

For antenna port 5, in a physical resource unit with frequency-domain index $n_{\mathrm{PR}U}$ assigned for the corresponding ADEDCH transmission, the pilot sequence $r_{n_s}(m)$ shall be mapped to complex-valued modulation symbols with $p=5$ in a slot according to $a_{k,l}^{(p)} = r_{n_s}(3\cdot l'\cdot N_{\mathrm{RU}}^{\mathrm{ADEDCH}} + m')$,where $k = (k')\bmod N_{\mathrm{sc}}^{\mathrm{RU}} + N_{\mathrm{sc}}^{\mathrm{RU}}\cdot n_{\mathrm{PRU}}$, ,

$k' = \begin{cases} 4m'+v_{\mathrm{shift}} & \text{if } l \in \{2,3\} \\ 4\mathrm{m}'+(2+v_{\mathrm{shift}})\bmod 4 & \text{if } l \in \{5,6\} \end{cases}$, $l' = \begin{cases} 0,1 & \text{if } n_s \bmod 2 = 0 \\ 2,3 & \text{if } n_s \bmod 2 = 1 \end{cases}$ and $l = 3,6,2,5$ for $l' = 0,1,2,3$ respectively. $m' = 0,1,\ldots,3N_{\mathrm{RU}}^{\mathrm{ADEDCH}}-1$ is the counter of MS-specific pilot resource elements within a respective OFDM symbol of the ADEDCH transmission.The BS-specific frequency shift is given by $v_{\mathrm{shift}} = N_{\mathrm{ID}}^{\mathrm{BS}} \bmod 3$. The mapping shall be in increasing order of the frequency-domain index $n_{\mathrm{PR}U}$ of the physical resource units assigned for the corresponding ADEDCH transmission. The quantity $N_{\mathrm{RU}}^{\mathrm{ADEDCH}}$ denotes the bandwidth in resource units of the corresponding ADEDCH transmission.

The notation R_p is used to denote a resource unit used for pilot transmission on antenna port p .For antenna ports 7 and 8, in a physical resource unit with frequency-domain index $n_{\mathrm{PR}U}$ assigned for the corresponding ADEDCH transmission, a part of the pilot sequence $r(m)$ shall

be mapped to complex-valued modulation symbols $a_{k,l}^{(p)}$ with $p \in \{7,8\}$.

3.4.3.3.3 Positioning pilots

Positioning pilots shall only be transmitted in resource units in downlink slots configured for positioning pilot transmission. In a slot configured for positioning pilot transmission, the starting positions of the OFDM symbols configured for positioning pilot transmission shall be identical to those in a slot in which all OFDM symbols have the same guard interval length as the OFDM symbols configured for positioning pilot transmission.
Positioning pilots are transmitted on antenna port 6.
The positioning pilots shall not be mapped to resource elements (k,l) allocated to ABCCH, APSS or ASSS regardless of their antenna port p.

3.4.3.3.3.1 Sequence generation

The reference-signal sequence $r_{l,n_s}(m)$ is defined by

$$r_{l,n_s}(m) = \frac{1}{\sqrt{2}}\left(1-2\cdot c(2m)\right) + j\frac{1}{\sqrt{2}}\left(1-2\cdot c(2m+1)\right), \quad m = 0,1,\ldots,2N_{\mathrm{RU}}^{\max,\mathrm{DL}}-1$$

where n_s is the half slot number within a radio frame, l is the OFDM symbol number within the half slot. The pseudo-random sequence generator shall be initialised with $c_{\mathrm{init}} = 2^{10}\cdot\left(7\cdot\left(n_s+1\right)+l+1\right)\cdot\left(2\cdot N_{\mathrm{ID}}^{\mathrm{BS}}+1\right)+2\cdot N_{\mathrm{ID}}^{\mathrm{BS}}+N_{\mathrm{GI}}$ at the start of each OFDM symbol where $N_{GI}=1$.

3.4.3.3.3.2 Mapping to resource elements

The pilot sequence $r_{l,n_s}(m)$ shall be mapped to complex-valued modulation symbols $a_{k,l}^{(p)}$ used as pilot for antenna port $p=6$ in half slot n_s according to $a_{k,l}^{(p)} = r_{l,n_s}(m')$, where

$k = 6\left(m+N_{\mathrm{RU}}^{\mathrm{DL}}-N_{\mathrm{RU}}^{\mathrm{PRS}}\right)+\left(6-l+v_{\mathrm{shift}}\right)\bmod 6$, $m = 0,1,\ldots,2\cdot N_{\mathrm{RU}}^{\mathrm{PRS}}-1$,

$m' = m + N_{\mathrm{RU}}^{\max,\mathrm{DL}} - N_{\mathrm{RU}}^{\mathrm{PRS}}$ and $l = \begin{cases} 3,5,6 & \text{if } n_{\mathrm{s}} \bmod 2 = 0 \\ 1,2,3,5,6 & \text{if } n_{\mathrm{s}} \bmod 2 = 1 \text{ and } (1 \text{ or } 2 \text{ ABCCH antenna ports}) \\ 2,3,5,6 & \text{if } n_{\mathrm{s}} \bmod 2 = 1 \text{ and } (4 \text{ ABCCH antenna ports}) \end{cases}$.

The bandwidth for positioning pilots and $N_{\mathrm{RU}}^{\mathrm{PRS}}$ is configured by higher layers and the BS-specific frequency shift is given by $v_{\mathrm{shift}} = N_{\mathrm{BS}}^{\mathrm{ID}} \bmod 6$.

3.4.3.3.3.3 Positioning pilot slot configuration

The PRS configuration index I_{PRS} is configured by higher layers. The BS specific slot configuration period T_{PRS} and the BS specific slot offset Δ_{PRS} for the transmission of positioning pilots is determined by I_{PRS}. If I_{PRS} is from 1 to 159, T_{PRS} is 160 and $\Delta_{\mathrm{PRS}} = I_{PRS}$. If I_{PRS} is from 160 to 479, T_{PRS} is 320 and $\Delta_{\mathrm{PRS}} = I_{PRS} - 160$. If I_{PRS} is from 480 to 1119, T_{PRS} is 640 and $\Delta_{\mathrm{PRS}} = I_{PRS} - 480$. If I_{PRS} is from 1120 to 2399, T_{PRS} is 1280 and $\Delta_{\mathrm{PRS}} = I_{PRS} - 1120$. Positioning pilots are transmitted only in configured DL slots. Positioning pilots shall not be transmitted in special slots. Positioning pilots shall be transmitted in N_{PRS} consecutive downlink slots, where N_{PRS} is configured by higher layers.
The positioning pilot instances, for the first slot of the N_{PRS} downlink slots, shall satisfy $(10 \times n_{\mathrm{f}} + \lfloor n_{\mathrm{s}} / 2 \rfloor - \Delta_{\mathrm{PRS}}) \bmod T_{\mathrm{PRS}} = 0$.

3.4.4 Training and Pilot Boosting

Boosting of training and pilot symbol should be defined to improve accuracy of channel estimation as with protocol version 1. Transmission power should be always constant even if MIMO is applied. Training and pilot boosting should change the boosting value of each layer because "Total power of total antenna in one PRU" is the same as "Total power of single antenna in one PRU". The power of the training and pilot symbol should equate in any case including MIMO in consideration of the carrier sense. These boosting values defined in this section should be default.

3.4.4.1 1 Layer Format SISO/SDMA

Figure 3.58 shows training and pilot boosting for 1 layer format. In this case, training and pilot symbols are 2.5dB higher than data symbols as default.

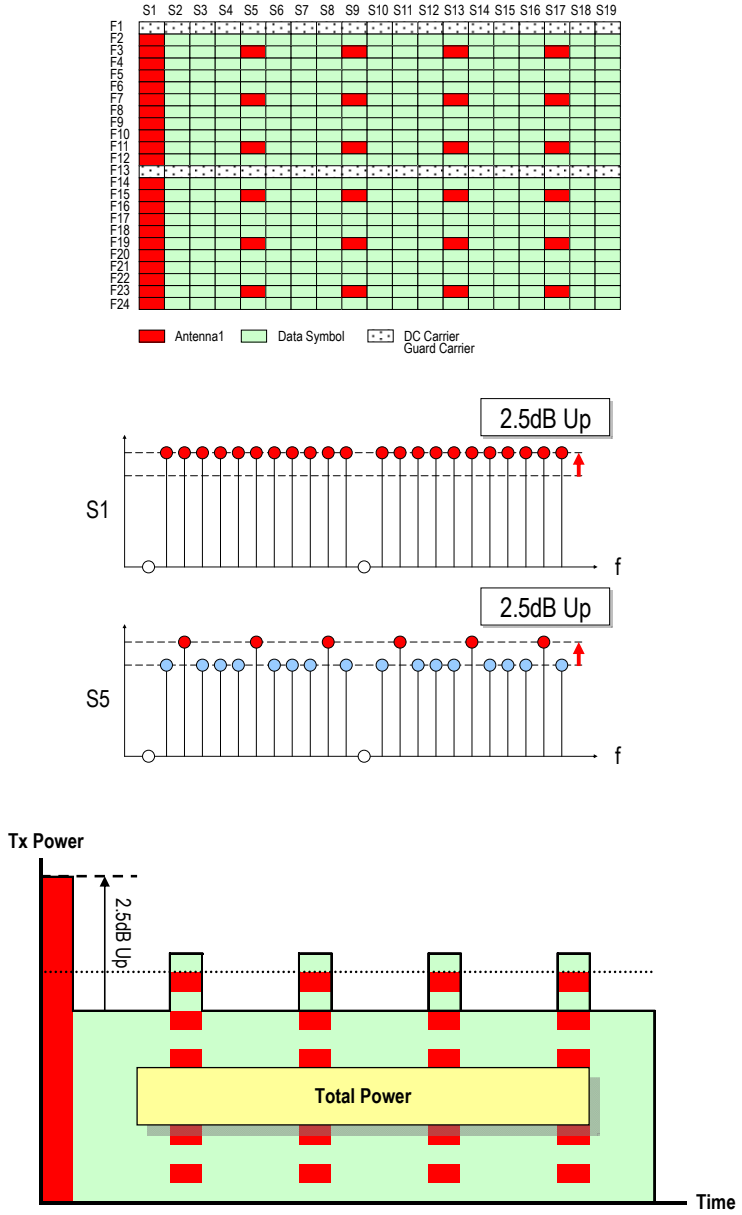

Figure 3.58 Training and Pilot boosting for 1 Layer format

3.4.4.2 2 Layer MIMO Format except for SDMA

Figure 3.59 shows training and pilot boosting for 2 layer format. In this case, training and pilot symbols are 5.5dB higher than data symbols because data symbols are multiplexed, but training and pilot are skipped with regular intervals.

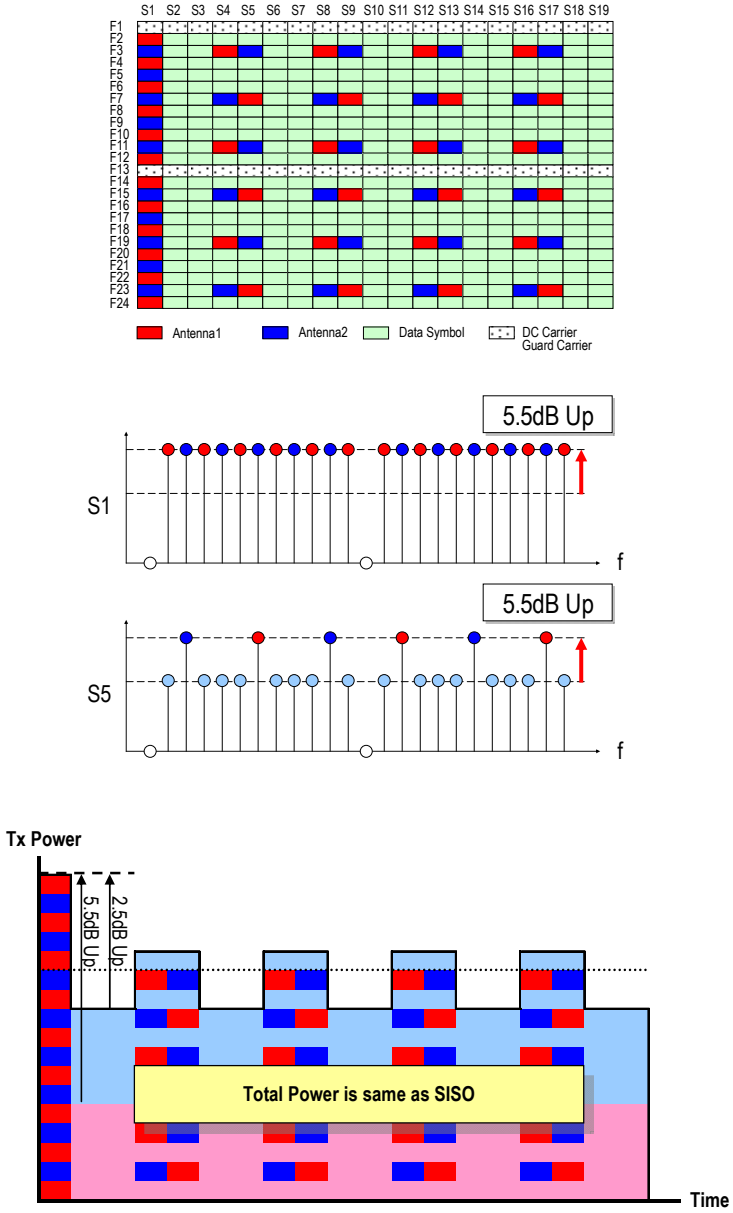

Figure 3.59 Training and Pilot boosting for 2 Layer format

3.4.4.3 4 Layer MIMO Format except for SDMA

Figure 3.60 shows training and pilot boosting for 4 layer format. In this case, training and pilot symbols are 8.5dB higher than data symbols because data symbols are multiplexed, but training and pilot are skipped with regular intervals.

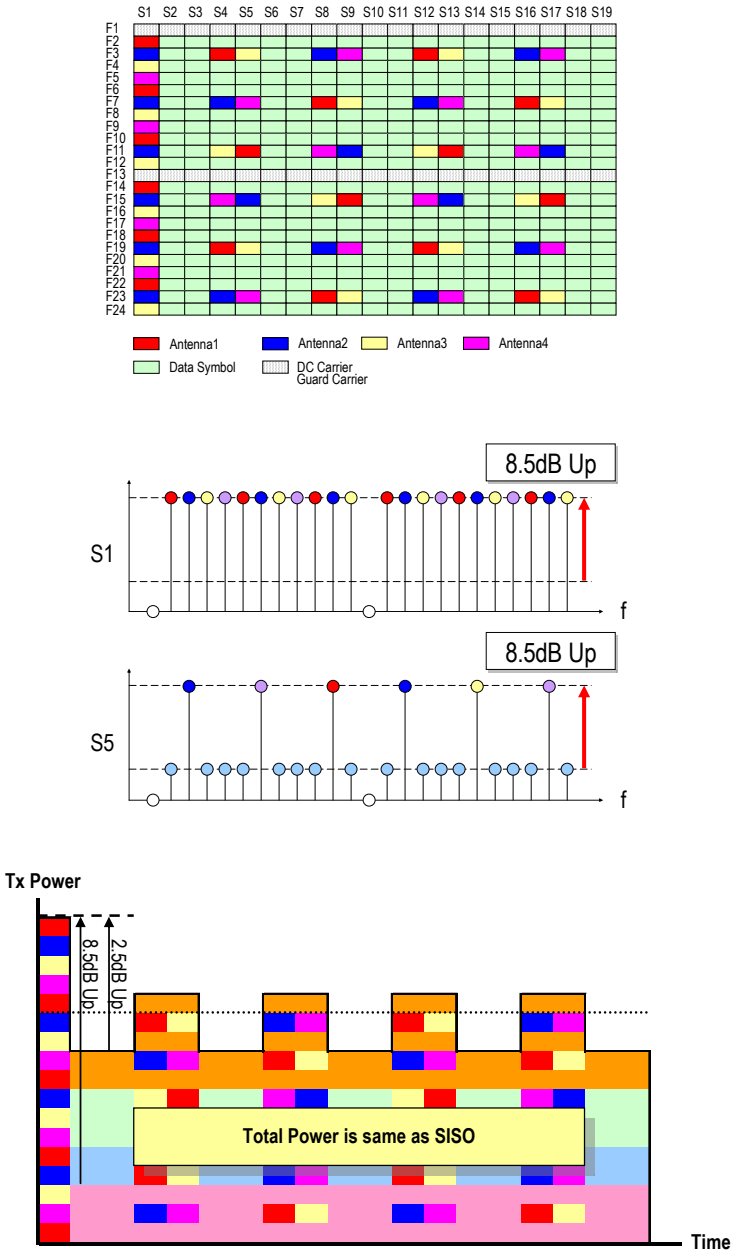

Figure 3.60 Training and Pilot boosting for 4 Layer format

3.4.4.4 Summary for Training and Pilot Boosting

The amount of training and pilot boosting depends on the MIMO type. Table 3.13 summarizes the relation between MIMO type and training and pilot boosting.

Table 3.13 Summary for Training and Pilot Boosting (Default)

	1 Layer Format	2 Layer Format	4 Layer Format
SISO/SDMA	2.5dB	-	-
STBC	-	5.5dB	
SM/EMB	-	5.5dB	8.5dB

3.4.4.5 Optional Downlink Pilot boosting

The BS determines the downlink transmit energy per resource element.
A MS may assume downlink BS-specific RS EPRP is constant across the downlink system bandwidth and constant across all slots until different BS-specific RS power information is received. The downlink reference-signal transmit power is defined as the linear average over the power contributions (in [W]) of all resource elements that carry BS-specific pilots within the operating system bandwidth.
The ratio of ADEDCH EPRP to BS-specific RS EPRP among ADEDCH REs for each OFDM symbol is denoted by either ρ_A or ρ_B according to the OFDM symbol index. ρ_A and ρ_B are MS-specific. If the number of antenna ports is 1 or 2, ρ_A is from {1,2,3,5,6} and ρ_B is 0 or 4. If the number of antenna ports is 4, ρ_A is from {2,3,5,6} and ρ_B is from {0,1,4}.

3.4.5 Signal for DL OFDM

Figure 3.61 describes the channel coding block diagram for DL signal symbol.

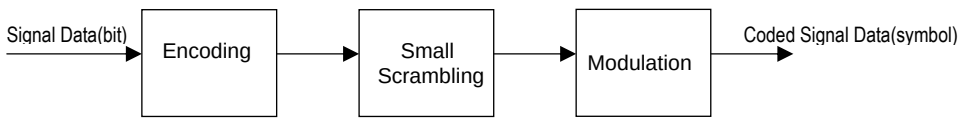

Figure 3.61 Signal Block Diagram

3.4.5.1 Encoding and Small Scrambling

Error correction code method is defined as hamming coding.

Hamming codes can detect and correct 1-bit errors, and can detect (but not correct) 2-bit errors. Hamming codes can work at high speed, because it can be calculated simply. Small scrambling is applied for PAPR reduction.

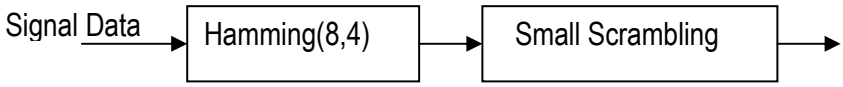

Figure 3.62 Process for Applying Hamming Code and Scrambling for Symbols

3.4.5.1.1 (8,4)-Hamming Coding

Actual data (4 bits)

$$(X_1 \quad X_2 \quad X_3 \quad X_4)$$

Coded data (8 bits)

$$(X_1 \quad X_2 \quad X_3 \quad X_4 \quad C_1 \quad C_2 \quad C_3 \quad C_4)$$

Generation polynomial

$$C_1 = X_1 \oplus X_2 \oplus X_3$$
$$C_2 = X_1 \oplus X_2 \oplus X_4$$
$$C_3 = X_1 \oplus X_3 \oplus X_4$$
$$C_4 = X_2 \oplus X_3 \oplus X_4$$

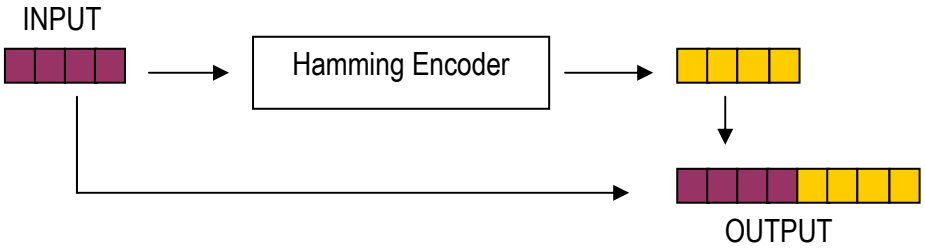

Figure 3.63 Generation Polynomial

3.4.5.1.2 Small Scrambling Pattern

The generation polynomial is defined as follows;

X^5 + X^2 + 1

Figure 3.64 shows the structure of small scrambling.

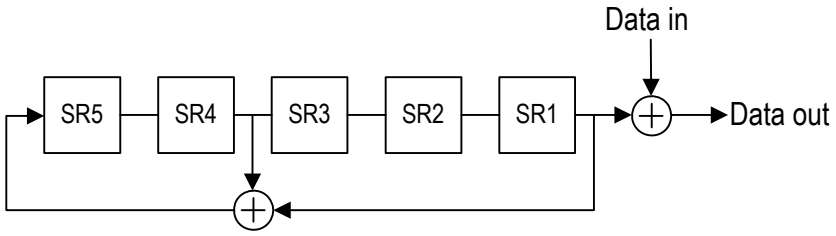

Figure 3.64 Small Scrambling for Hamming Code

Initial values of shift register SR5-SR1 are set to the lower 5 bits of SCH number(*1). The shift register of scrambler is initialized for each Hamming code.
(*1)SCH number : Refer to Section 2.4.3.2.

3.4.5.2 Modulation for Signal

The serial signal input after interleaving is converted to IQ Data symbol on each symbol. The modulation for signal is used as BPSK except for EMB-MIMO. In case of EMB-MIMO, QPSK modulation is carried out for signal. Refer to Appendix B.1.1 for BPSK and B.1.3 for QPSK.

3.4.5.3 Signal for Optional DL Physical Channel

3.4.5.3.1 Advanced Physical Broadcast Channel

3.4.5.3.1.1 Scrambling

The block of bits $b(0),...,b(M_{\text{bit}}-1)$ shall be scrambled with a BS-specific sequence prior to modulation, resulting in a block of scrambled bits $\tilde{b}(0),...,\tilde{b}(M_{\text{bit}}-1)$ according to $\tilde{b}(i)=(b(i)+c(i))\bmod 2$. M_{bit} equals 1920,The scrambling sequence shall be initialised with $c_{\text{init}}=N_{\text{ID}}^{\text{BS}}$ in each radio frame fulfilling $n_{\text{f}} \bmod 4=0$.

3.4.5.3.1.2 Modulation

The block of scrambled bits $\tilde{b}(0),...,\tilde{b}(M_{\text{bit}}-1)$ shall be modulated, resulting in a block of complex-valued modulation symbols $d(0),...,d(M_{\text{symb}}-1)$. B.10.2 QPSK is used for the physical broadcast channel.

3.4.5.3.1.3 Layer mapping and precoding

The block of modulation symbols $d(0),...,d(M_{\text{symb}}-1)$ shall be mapped to layers with $M_{\text{symb}}^{(0)} = M_{\text{symb}}$ and precoded, resulting in a block of vectors $y(i) = \left[y^{(0)}(i) \quad ... \quad y^{(P-1)}(i)\right]^T$, $i = 0,...,M_{\text{symb}}-1$, where $y^{(p)}(i)$ represents the signal for antenna port p and where $p = 0,..., P-1$ and the number of antenna ports for BS-specific pilots $P \in \{1,2,4\}$.

3.4.5.3.2 Advanced Downlink ECCH Indicator Channel

The ADEFICH shall be transmitted when the number of OFDM symbols for ADECCH is greater than zero. 1 or 2 OFDM symbols are used for ADECCH in slot 1 and 6,. 1,2 or 3 OFDM symbols are used for ADECCH in slots (except slot 6) configured with Positioning pilots,

3.4.5.3.2.1 Scrambling

The block of bits $b(0),...,b(31)$ transmitted in one slot shall be scrambled with a BS-specific sequence prior to modulation, resulting in a block of scrambled bits $\tilde{b}(0),...,\tilde{b}(31)$ according to $\tilde{b}(i) = (b(i) + c(i)) \bmod 2$. The scrambling sequence generator shall be initialised with $c_{\text{init}} = \left(\lfloor n_s/2 \rfloor + 1\right) \cdot \left(2N_{\text{ID}}^{\text{BS}} + 1\right) \cdot 2^9 + N_{\text{ID}}^{\text{BS}}$ at the start of each slot.

3.4.5.3.2.2 Modulation

The block of scrambled bits $\tilde{b}(0),...,\tilde{b}(31)$ shall be modulated, resulting in a block of complex-valued modulation symbols $d(0),...,d(15)$. QPSK is used for the ADEFICH.

3.4.5.3.2.3 Layer mapping and precoding

The block of modulation symbols $d(0),...,d(15)$ shall be mapped to layers with $M_{\text{symb}}^{(0)} = 16$ and precoded, resulting in a block of vectors $y(i) = \left[y^{(0)}(i) \quad ... \quad y^{(P-1)}(i)\right]^T$, $i = 0,...,15$, where $y^{(p)}(i)$ represents the signal for antenna port p and where $p = 0,..., P-1$ and the number of antenna ports for BS-specific pilots $P \in \{1,2,4\}$. The ADEFICH shall be transmitted on the same

set of antenna ports as the ABCCH.

3.4.5.3.3 Advanced Downlink ECCH

3.4.5.3.3.1 ADECCH formats

An ADECCH is transmitted on an aggregation of one or several consecutive RP(Resource Point) groups. The number of resource-point groups not assigned to ADEFICH or ADHICH is N_{RPG}. The cluster of RP groups available in the system are numbered from 0 and $N_{C-RPG}-1$, where $N_{C-RPG}=\lfloor N_{RPG}/9 \rfloor$. An ADECCH consisting of n consecutive RPGs may only start on a RPG fulfilling $i \bmod n = 0$, where i is the RPG number. Multiple ADECCHs can be transmitted in a slot. N_{C-RPG} is 1,3,4,8, N_{RPG} is 9,18,36,72 and Number of ADECCH bits is 72,144,288,576 for ADECCH format 0,1,2,3 respectively.

3.4.5.3.3.2 ADECCH multiplexing and scrambling

The block of bits $b^{(i)}(0),...,b^{(i)}(M_{\text{bit}}^{(\text{i})}-1)$ on each of the control channels to be transmitted in a slot, where $M_{\text{bit}}^{(\text{i})}$ is the number of bits in one slot to be transmitted on ADECCH number i, shall be multiplexed, resulting in a block of bits $b^{(0)}(0),...,b^{(0)}(M_{\text{bit}}^{(0)}-1),b^{(1)}(0),...,b^{(1)}(M_{\text{bit}}^{(1)}-1),...,b^{(n_{\text{ADECCH}}-1)}(0),...,b^{(n_{\text{ADECCH}}-1)}(M_{\text{bit}}^{(n_{\text{ADECCH}}-1)}-1)$,where n_{ADECCH} is the number of ADECCHs transmitted in the slot. The block of bits $b^{(0)}(0),...,b^{(0)}(M_{\text{bit}}^{(0)}-1),b^{(1)}(0),...,b^{(1)}(M_{\text{bit}}^{(1)}-1),...,b^{(n_{\text{ADECCH}}-1)}(0),...,b^{(n_{\text{ADECCH}}-1)}(M_{\text{bit}}^{(n_{\text{ADECCH}}-1)}-1)$ shall be scrambled with a BS-specific sequence prior to modulation, resulting in a block of scrambled bits $\tilde{b}(0),...,\tilde{b}(M_{\text{tot}}-1)$ according to $\tilde{b}(i)=(b(i)+c(i)) \bmod 2$.

The scrambling sequence generator shall be initialised with $c_{\text{init}} = \lfloor n_s/2 \rfloor 2^9 + N_{\text{ID}}^{\text{BS}}$ at the start of each slot.Cluster of RP group number n corresponds to bits $b(72n), b(72n+1), ..., b(72n+71)$. If necessary, <NIL> units shall be inserted in the block of bits prior to scrambling to ensure that the ADECCHs starts at the CCE positions to ensure that the length of the scrambled block of bits matches the amount of resource-point groups not assigned to ADEFICH or ADHICH.

3.4.5.3.3.3 Modulation

The block of scrambled bits $\tilde{b}(0),...,\tilde{b}(M_{\text{tot}}-1)$ shall be modulated, resulting in a block of complex-valued modulation symbols $d(0),...,d(M_{\text{symb}}-1)$. QPSK is used for the ADECCH.

3.4.5.3.3.4 Layer mapping and precoding

The block of modulation symbols $d(0),...,d(M_{\text{symb}}-1)$ shall be mapped to layers with $M_{\text{symb}}^{(0)} = M_{\text{symb}}$ and precoded, resulting in a block of vectors $y(i) = \left[y^{(0)}(i) \quad ... \quad y^{(P-1)}(i)\right]^T$, $i = 0,...,M_{\text{symb}}-1$ to be mapped onto resources on the antenna ports used for transmission, where $y^{(p)}(i)$ represents the signal for antenna port p. The ADECCH shall be transmitted on the same set of antenna ports as the ABCCH.

3.4.5.3.4 Advanced Downlink Hybrid-ARQ Indicator Channel

Multiple ADHICHs mapped to the same set of resource elements constitute a ADHICH group, where ADHICHs within the same ADHICH group are separated through different orthogonal sequences. An ADHICH resource is identified by the index pair $\left(n_{\text{ADHICH}}^{\text{group}}, n_{\text{ADHICH}}^{\text{seq}}\right)$, where $n_{\text{ADHICH}}^{\text{group}}$ is the ADHICH group number and $n_{\text{ADHICH}}^{\text{seq}}$ is the orthogonal sequence index within the group. The index $n_{\text{ADHICH}}^{\text{group}}$ in a downlink slot with non-zero ADHICH resources ranges from 0 to $q \cdot N_{ADHICH}^{group} - 1$.The number of ADHICH groups may vary between downlink slots and is given by $q \cdot N_{ADHICH}^{group}$, where q is given by Table 3.14 and $N_{\text{ADHICH}}^{\text{group}}$ by the expression

above.

Table 3.14 value of factor q

Uplink-downlink Configuration	Slot Number									
	0	1	2	3	4	5	6	7	8	9
0	2	1	-	-	-	2	1	-	-	-
1	0	1	-	-	1	0	1	-	-	1
2	0	0	-	1	0	0	0	-	1	0
3	1	1	-	-	-	1	1	-	-	1

3.4.5.3.4.1 Modulation

The block of bits $b(0),...,b(M_{\text{bit}}-1)$ transmitted on one ADHICH in one slot shall be modulated, resulting in a block of complex-valued modulation symbols $z(0),...,z(M_{\text{s}}-1)$, where $M_{\text{s}} = M_{\text{bit}}$. BPSK is used for the advanced downlink hybrid ARQ indicator channel.

The block of modulation symbols $z(0),...,z(M_{\text{s}}-1)$ shall be symbol-wise multiplied with an orthogonal sequence and scrambled, resulting in a sequence of modulation symbols $d(0),...,d(M_{\text{symb}}-1)$ according to $d(i) = w\left(i \bmod N_{\text{SF}}^{\text{ADHICH}}\right)\cdot\left(1-2c(i)\right)\cdot z\left(\left\lfloor i/N_{\text{SF}}^{\text{ADHICH}}\right\rfloor\right)$, where $i = 0,...,M_{symb}-1$, $M_{symb} = N_{SF}^{ADHICH}.M_s$, $N_{SF}^{ADHICH} = 4$ and $c(i)$ is a BS-specific scrambling sequence generated. The scrambling sequence generator shall be initialised with $c_{\text{init}} = \left(\left\lfloor n_{\text{s}}/2\right\rfloor+1\right)\cdot\left(2N_{\text{ID}}^{\text{BS}}+1\right)\cdot 2^9 + N_{\text{ID}}^{\text{BS}}$ at the start of each slot.

The sequence $\left[w(0) \quad \cdots \quad w(N_{\text{SF}}^{\text{ADHICH}}-1)\right]$ is given by Table 3.15 where the sequence index $n_{\text{ADHICH}}^{\text{seq}}$ corresponds to the ADHICH number within the ADHICH group.

Table 3.15 Orthogonal Sequences $[w(i)]$ for ADHICH.

Sequence Index $n_{\mathrm{ADHICH}}^{\mathrm{seq}}$	Orthogonal Sequences $N_{\mathrm{SF}}^{\mathrm{ADHICH}} = 4$
0	$[+1 \quad +1 \quad +1 \quad +1]$
1	$[+1 \quad -1 \quad +1 \quad -1]$
2	$[+1 \quad +1 \quad -1 \quad -1]$
3	$[+1 \quad -1 \quad -1 \quad +1]$
4	$[+j \quad +j \quad +j \quad +j]$
5	$[+j \quad -j \quad +j \quad -j]$
6	$[+j \quad +j \quad -j \quad -j]$
7	$[+j \quad -j \quad -j \quad +j]$

3.4.5.3.4.2 Resource group alignment, layer mapping and precoding

The block of symbols $d(0),...,d(M_{\mathrm{symb}}-1)$ should be first aligned with resource point group size, resulting in a block of symbols $d^{(0)}(0),...,d^{(0)}(c \cdot M_{\mathrm{symb}}-1)$, where $c=1$, $d^{(0)}(i)=d(i)$, for $i=0,...,M_{\mathrm{symb}}-1$.The block of symbols $d^{(0)}(0),...,d^{(0)}(c \cdot M_{\mathrm{symb}}-1)$ shall be mapped to layers and precoded, resulting in a block of vectors $y(i)=\left[y^{(0)}(i) \quad ... \quad y^{(P-1)}(i)\right]^T$, $i=0,...,c \cdot M_{\mathrm{symb}}-1$, where $y^{(p)}(i)$ represents the signal for antenna port p, $p=0,...,P-1$ and the number of antenna ports for BS-specific pilots $P \in \{1,2,4\}$. The layer mapping and precoding operation depends on the number of antenna ports used for transmission of the ADHICH. The ADHICH shall be transmitted on the same set of antenna ports as the ABCCH.

3.4.6 Null (DTX/DC Carrier/Guard carrier) for DL OFDM

Null symbol is defined as 0 + 0j. It includes Discontinuous Transmission (DTX), DC carrier and Guard carrier. The details of DTX are described in Section 3.4.1.7.

3.4.7 TCCH Format for DL OFDM

TCCH format is not used for DL.

3.4.8 PRU Structure for DL OFDM

The PRU structure for DL OFDM defined in this chapter is shown in Table 3.16.

Table 3.16 PRU Structure for DL OFDM

Channel Name			Format Type	Layer
CCH	CCCH	Common Control Channel	-	1
ICH	ANCH	Anchor Channel	format 1	1
			format 2	1
			format 3	2
			format 4	4
	EXCH	Extra Channel	format 1	1
			format 2	2
			format 4	4
			format 3	2
			format 5	4
	CSCH	Circuit Switching Channel	-	1

3.4.8.1 CCH for DL OFDM

3.4.8.1.1 OFDM PRU Structure for CCCH

The PRU diagram shown in Figure 3.65 is the diagram about CCCH for DL. As shown in the figure and Table 3.17, CCCH is composed of data symbols, pilot symbols, training symbols and null symbols (DC carrier, guard carrier).

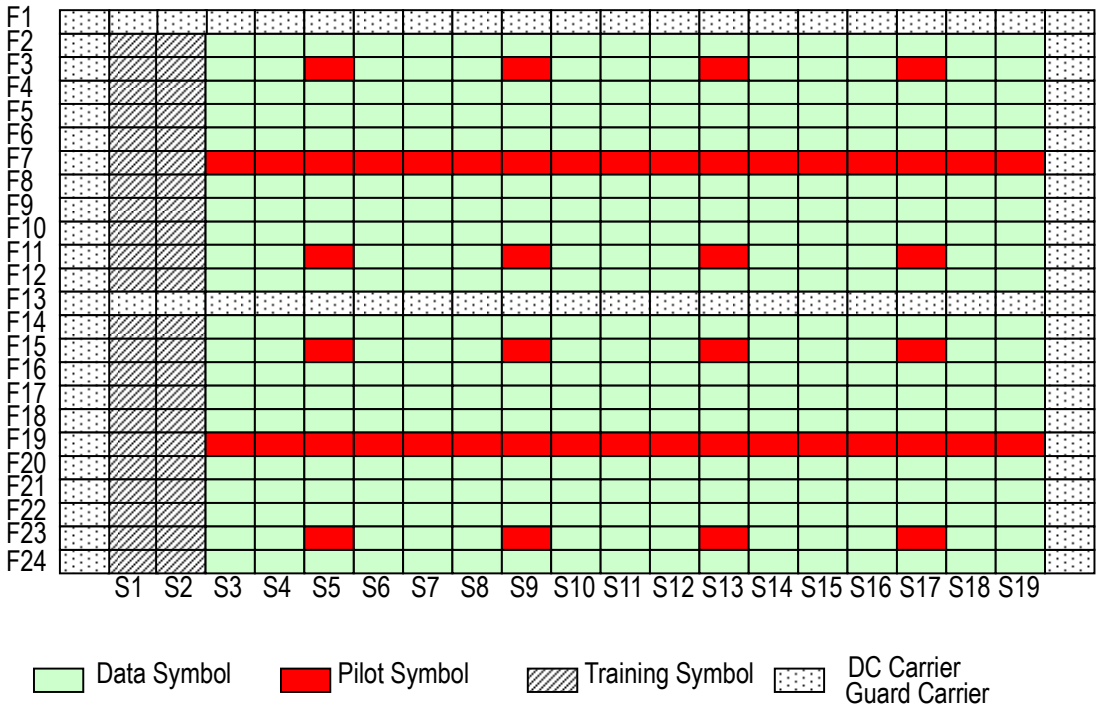

Figure 3.65 OFDM PRU Structure for CCCH

Table 3.17 Composition of CCCH

Symbol Name	Number of Symbols
Data Symbol	324
Training Symbol	44
Pilot Symbol	50
Null Symbol (DC Carrier, Guard Carrier)	38

3.4.8.1.2 ICH for DL OFDM

3.4.8.1.2.1 OFDM PRU Structure for ANCH

The PRU diagrams shown in Figure 3.66, Figure 3.67, Figure 3.68, and Figure 3.69 are the diagrams about ANCH for DL. As shown in these figures, there are four kinds of ANCH formats. ANCH format (1) and (2) are used in case of 1 layer, ANCH format (3) and (4) are used in case of 2 and 4 layers for STBC-MIMO.

When one antenna transmits pilot and training symbols, the other antenna(s) transmits not pilot and training symbols but null symbols. The data and signal symbols are transmitted from each antenna.

format (1)

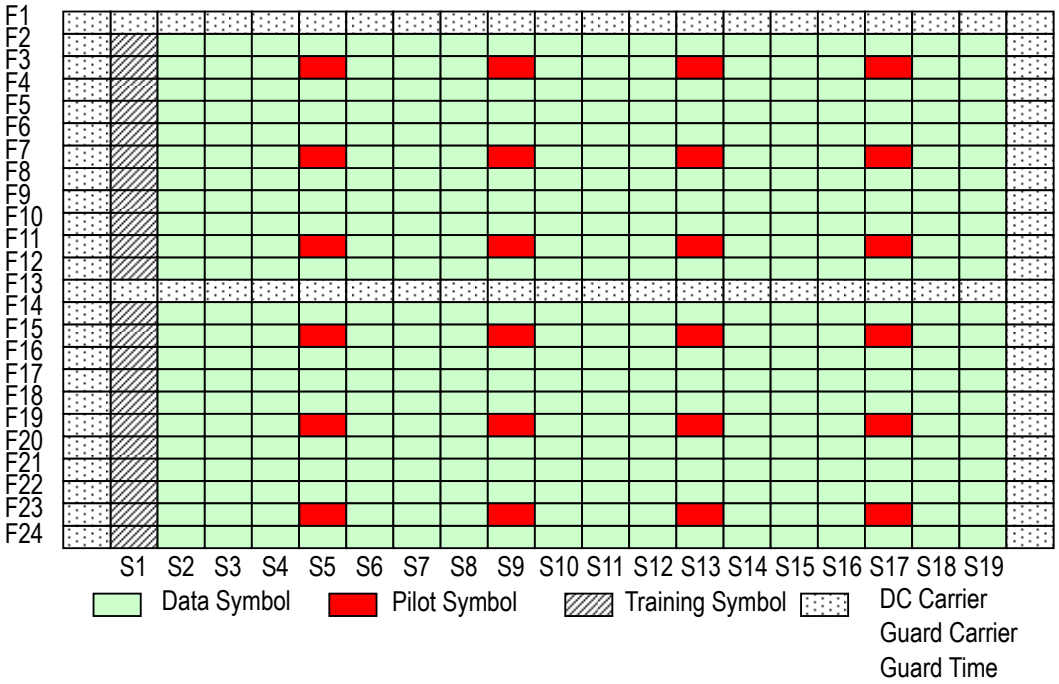

Figure 3.66 OFDM PRU Structure for ANCH format (1)

Table 3.18 Composition of ANCH format (1)

Symbol Name	Number of Symbols
Data Symbol	372
Training Symbol	22
Pilot Symbol	24
Null Symbol (DC Carrier, Guard Carrier)	38

format (2)

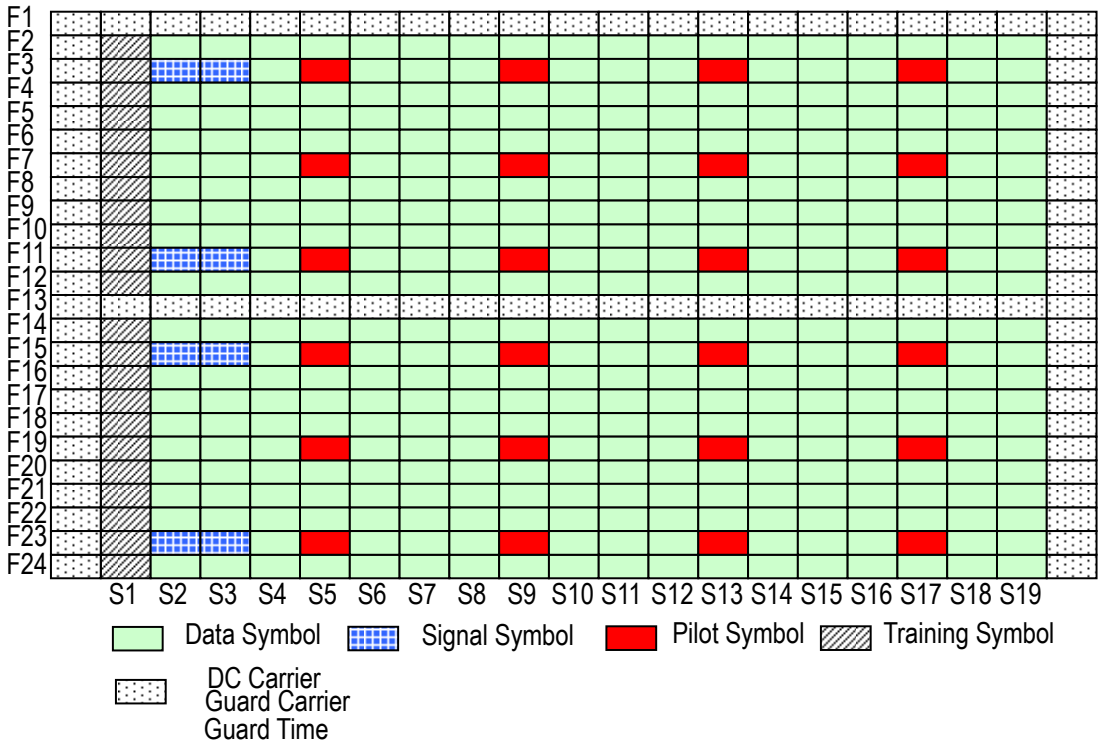

Figure 3.67 OFDM PRU Structure for ANCH format (2)

Table 3.19 Composition of ANCH format (2)

Symbol Name	Number of Symbols
Data Symbol	364
Signal Symbol	8
Training Symbol	22
Pilot Symbol	24
Null Symbol (DC Carrier, Guard Carrier)	38

format (3)

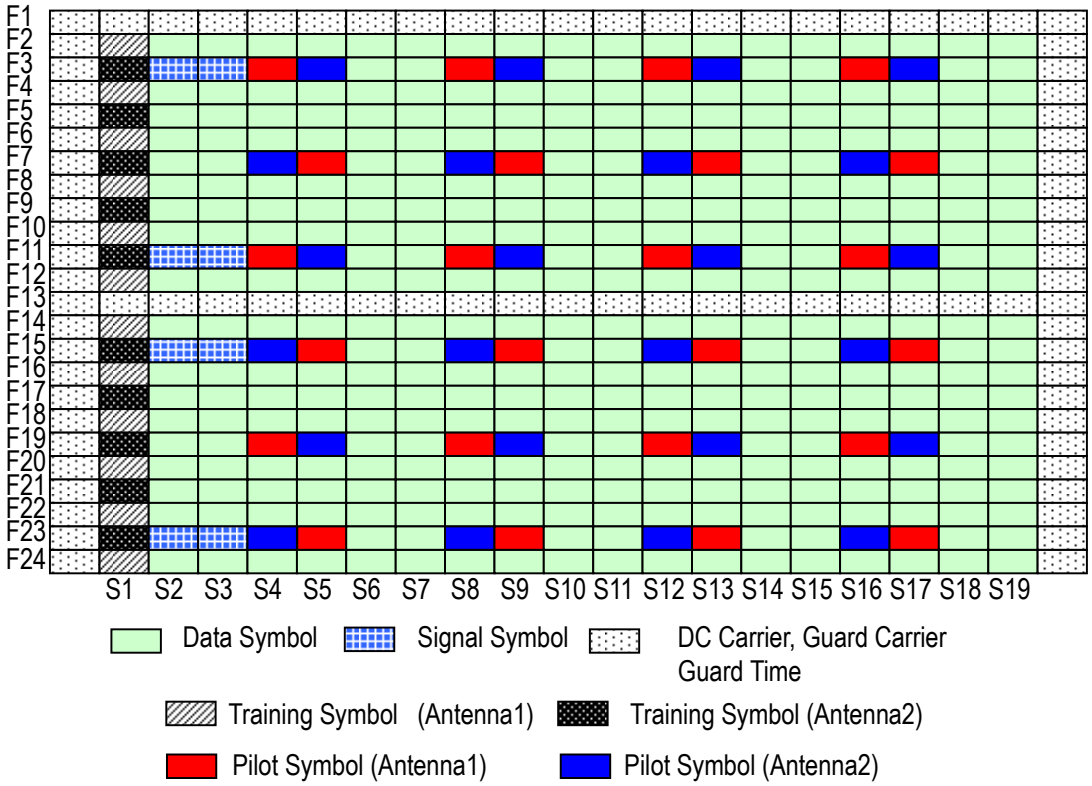

Figure 3.68 OFDM PRU Structure for ANCH format (3)

Table 3.20 Composition of ANCH format (3)

Symbol Name	Number of Symbols
Data Symbol	340
Signal Symbol	8
Training Symbol(Antenna1)	12
Training Symbol(Antenna2)	10
Pilot Symbol(Antenna1)	24
Pilot Symbol(Antenna2)	24
Null Symbol (DC Carrier, Guard Carrier)	38

format (4)

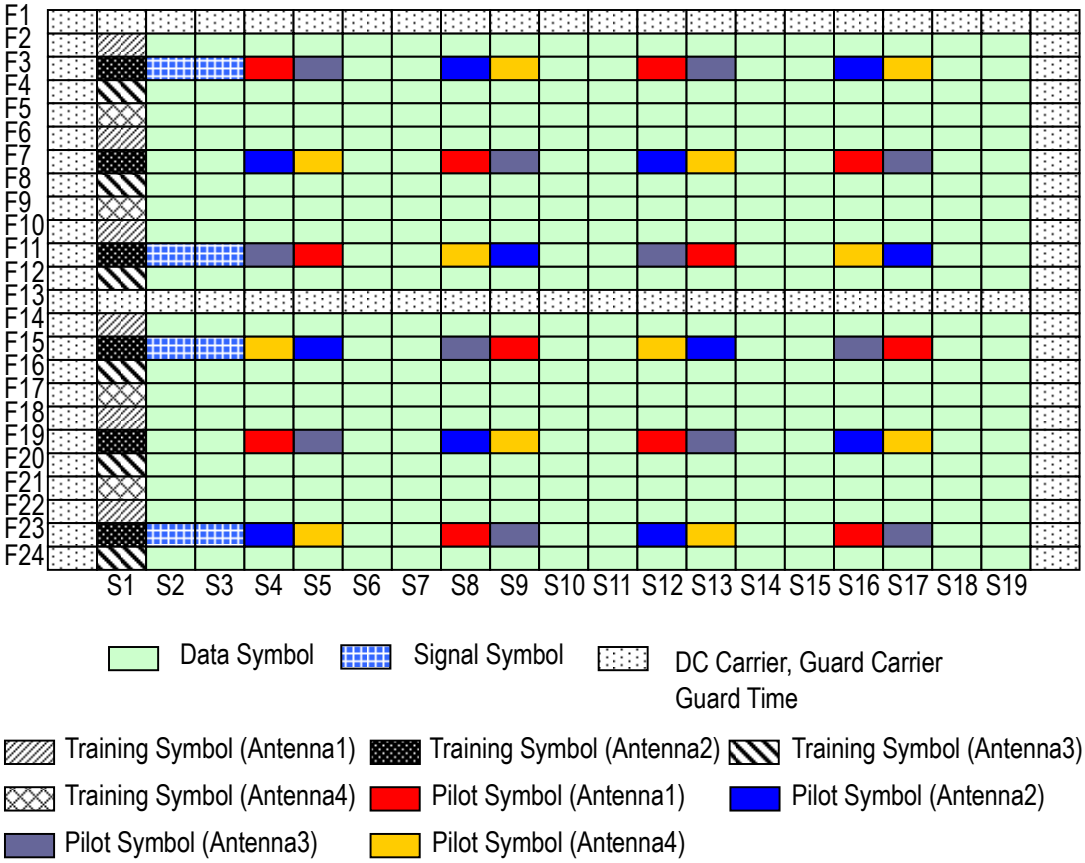

Figure 3.69 OFDM PRU Structure for ANCH format (4)

Table 3.21 Composition of ANCH format (4)

Symbol Name	Number of Symbols
Data Symbol	340
Signal Symbol	8
Training Symbol(Antenna1)	6
Training Symbol(Antenna2)	6
Training Symbol(Antenna3)	6
Training Symbol(Antenna4)	4
Pilot Symbol(Antenna1)	12
Pilot Symbol(Antenna2)	12
Pilot Symbol(Antenna3)	12
Pilot Symbol(Antenna4)	12
Null Symbol (DC Carrier, Guard Carrier)	38

3.4.8.1.3 OFDM PRU Structure for EXCH

The PRU diagrams shown in Figure 3.70, Figure 3.71, Figure 3.73, Figure 3.74 and Figure 3.72 are the diagrams about EXCH for DL. As shown in these figures, there are five kinds of EXCH formats. EXCH format (a-1), (a-2), (a-3), (a-4) and (a-5) have always DC carrier and guard carrier. These formats are the cases that full subcarrier mode is not used.
The PRU diagrams shown in Figure 3.75, Figure 3.76 and Figure 3.77 are the diagrams about EXCH for DL. As shown in these figures, there are three kinds of EXCH formats. EXCH formats (b), (c) and (d) are the case that full subcarrier mode is used. EXCH format (b) is used for all SCHs except central SCH to which EXCH format (c) or (d) is applied.

EXCH Format (a-1) is used in case of 1 layer. EXCH Format (a-2) and (a-4) are used in case of 2 and 4 layers for SM and STBC-MIMO. EXCH Format (a-3) and (a-5) are used in case of 2 and 4 layers for EMB and STBC-MIMO.
There are two and four kinds of arrangement for pilot and training symbols. When one antenna transmits pilot and training symbols, the other antenna(s) transmits not pilot and training symbols but null symbols. The data and signal symbols are transmitted from each antenna.
As for training symbol for EXCH format (b), (c), (d), refer to 3.4.2.3.2.3.

EXCH data size depends on EXCH format and MCS which is indicated by ANCH/ECCH. Moreover, each EXCH data size shall be equal to the number of bits which can be accommodated in one or two PRU.

format (a-1)

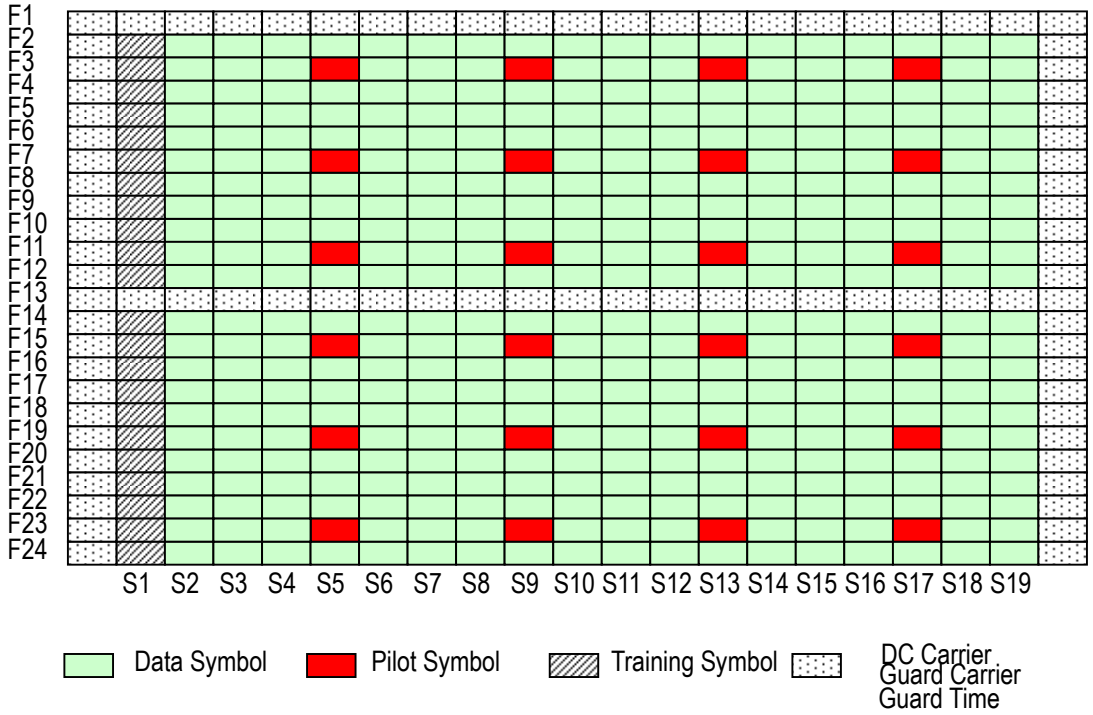

Figure 3.70 OFDM PRU Structure for EXCH format (a-1)

Table 3.22 Composition of EXCH format (a-1)

Symbol Name	Number of Symbols
Data Symbol	372
Training Symbol	22
Pilot Symbol	24
Null Symbol (DC Carrier, Guard Carrier)	38

format (a-2)

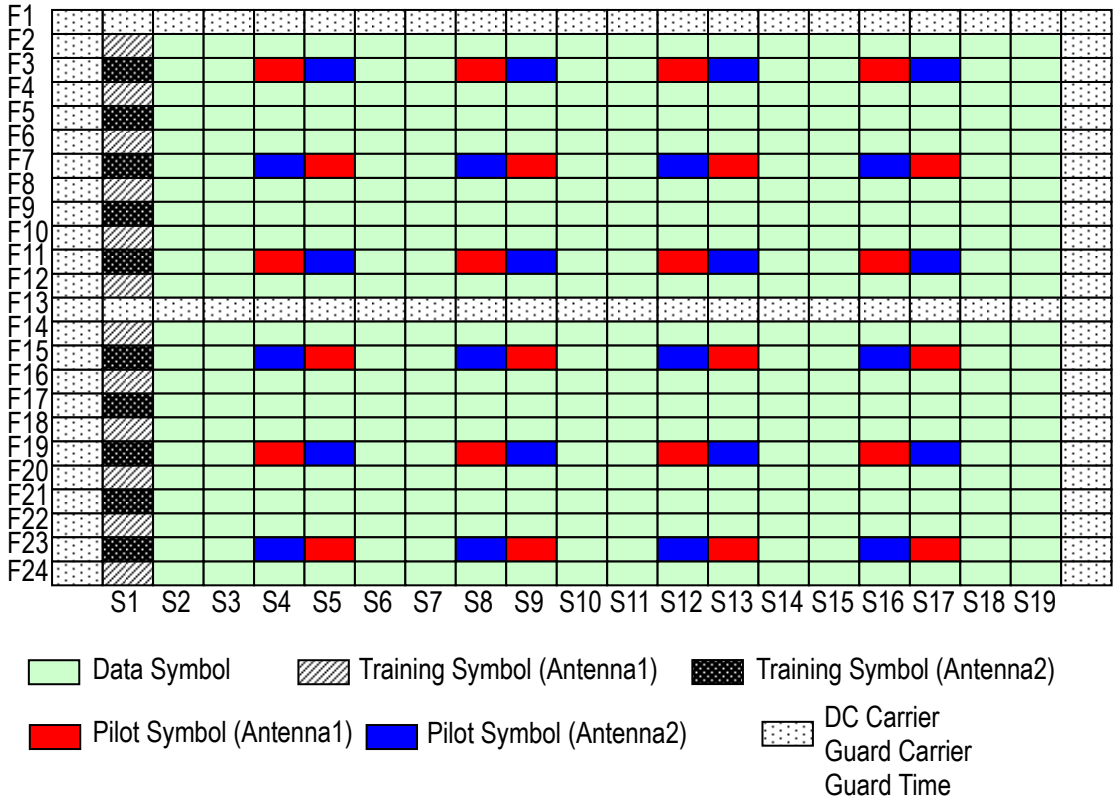

Figure 3.71 OFDM PRU Structure for EXCH format (a-2)

Table 3.23 Composition of EXCH format (a-2)

Symbol Name	Number of Symbols
Data Symbol	348
Training Symbol(Antenna1)	12
Training Symbol(Antenna2)	10
Pilot Symbol(Antenna1)	24
Pilot Symbol(Antenna2)	24
Null Symbol (DC Carrier, Guard Carrier)	38

format (a-3)

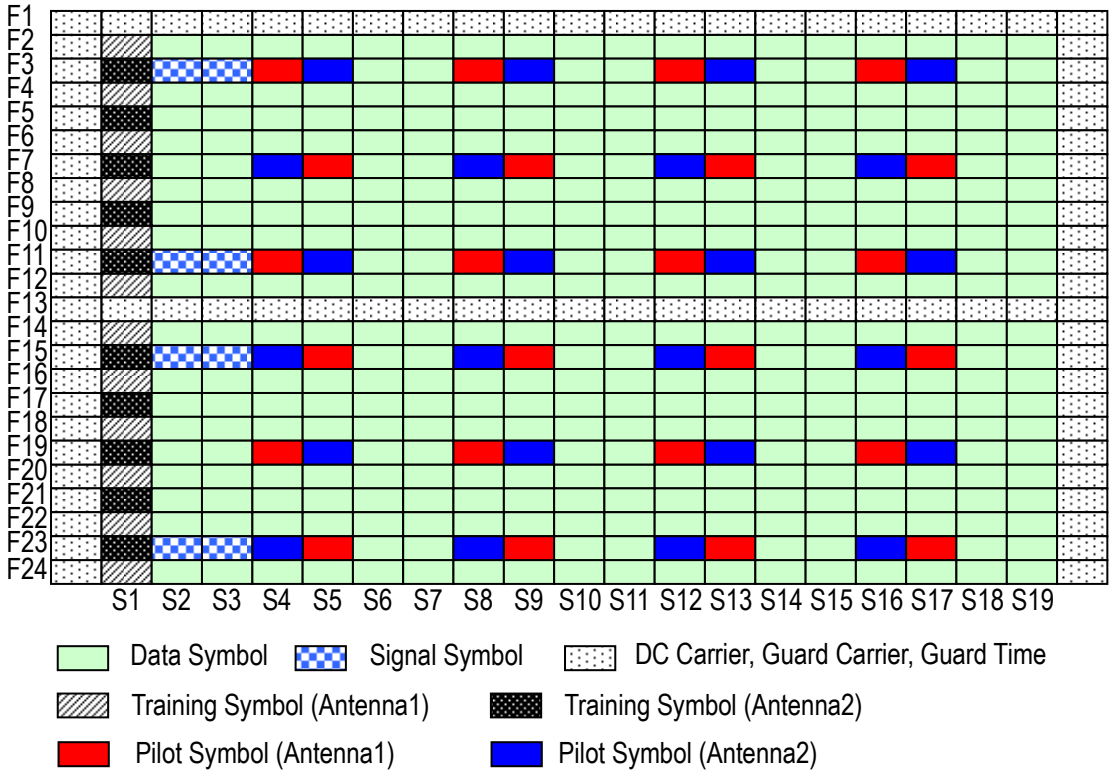

Figure 3.72 OFDM PRU Structure for EXCH format (a-3)

Table 3.24 Composition of EXCH format (a-3)

Symbol Name	Number of Symbols
Data Symbol	340
Signal Symbol	8
Training Symbol(Antenna1)	12
Training Symbol(Antenna2)	10
Pilot Symbol(Antenna1)	24
Pilot Symbol(Antenna2)	24
Null Symbol (DC Carrier, Guard Carrier)	38

format (a-4)

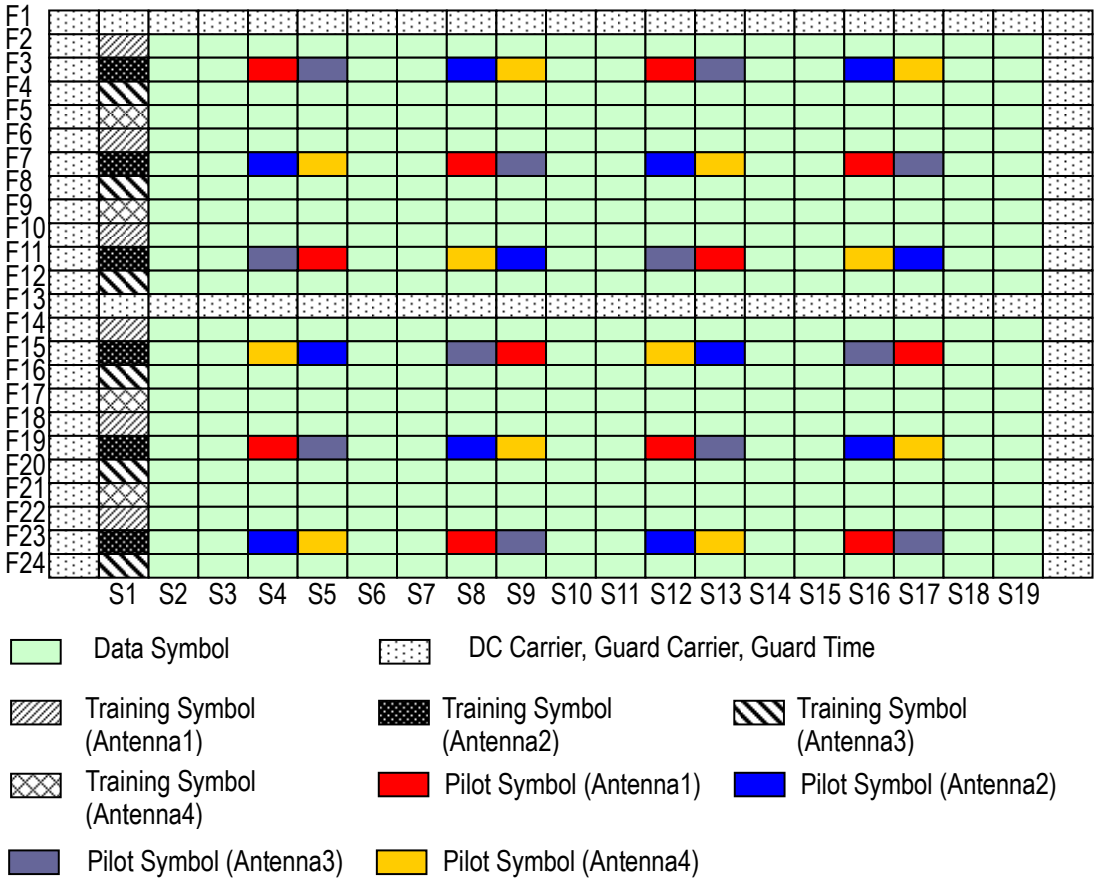

Figure 3.73 OFDM PRU Structure for EXCH format (a-4)

Table 3.25 Composition of EXCH format (a-4)

Symbol Name	Number of Symbols
Data Symbol	348
Training Symbol(Antenna1)	6
Training Symbol(Antenna2)	6
Training Symbol(Antenna3)	6
Training Symbol(Antenna4)	4
Pilot Symbol(Antenna1)	12
Pilot Symbol(Antenna2)	12
Pilot Symbol(Antenna3)	12
Pilot Symbol(Antenna4)	12
Null Symbol (DC Carrier, Guard Carrier)	38

format (a-5)

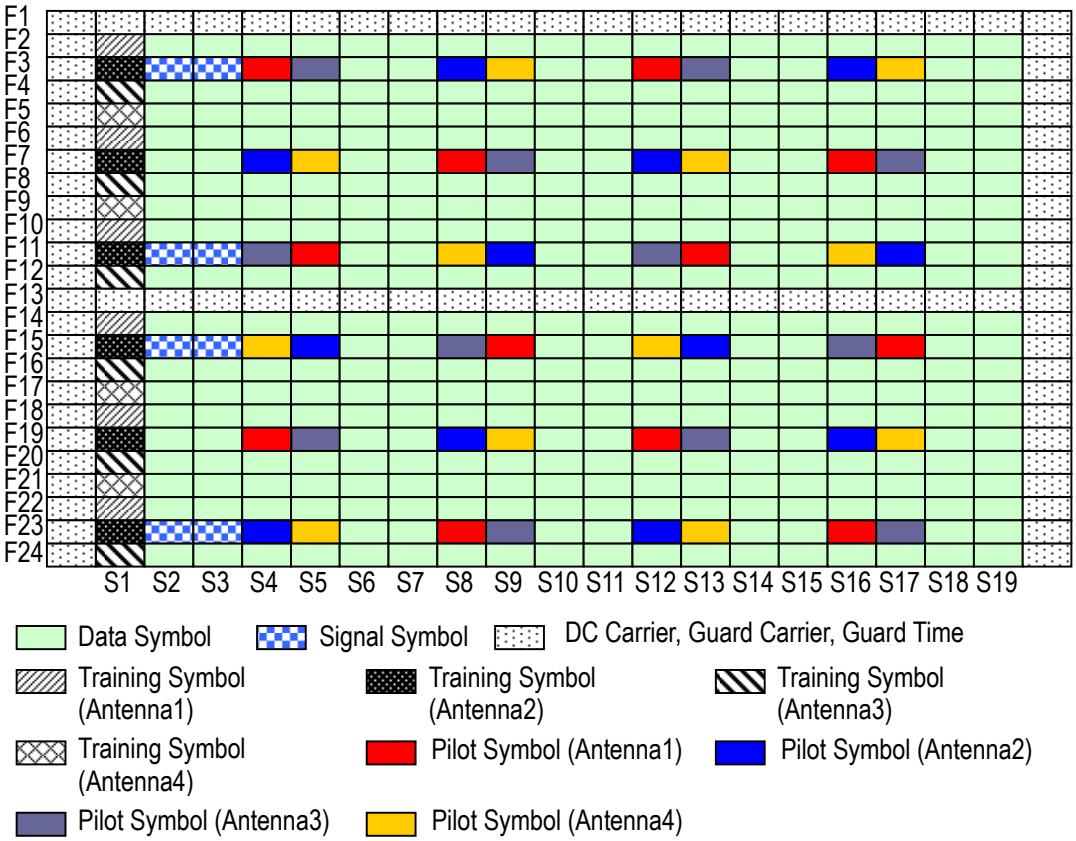

Figure 3.74 OFDM PRU Structure for EXCH format (a-5)

Table 3.26 Composition of EXCH format (a-5)

Symbol Name	Number of Symbols
Data Symbol	340
Signal Symbol	8
Training Symbol(Antenna1)	6
Training Symbol(Antenna2)	6
Training Symbol(Antenna3)	6
Training Symbol(Antenna4)	4
Pilot Symbol(Antenna1)	12
Pilot Symbol(Antenna2)	12
Pilot Symbol(Antenna3)	12
Pilot Symbol(Antenna4)	12
Null Symbol (DC Carrier, Guard Carrier)	38

As shown in Figure 3.75, the training symbol of F1 is a copy of F12. The training symbol of F13 is a copy of F24.

format (b)

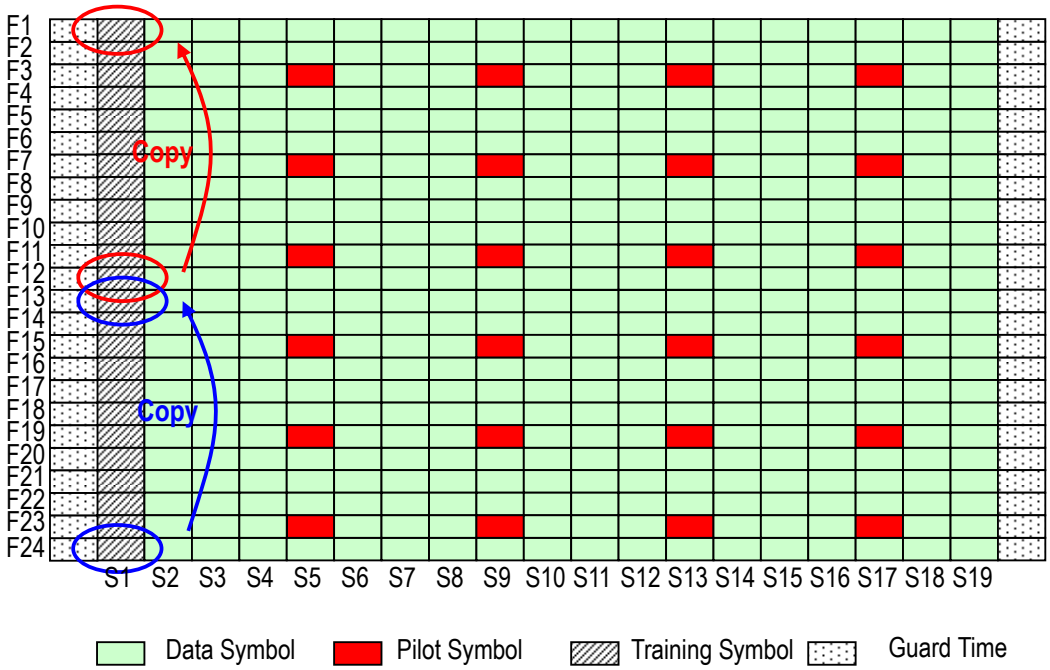

Figure 3.75 OFDM PRU Structure for EXCH format (b)

Table 3.27 Composition of EXCH format (b)

Symbol Name	Number of Symbols
Data Symbol	408
Training Symbol	24
Pilot Symbol	24
Null Symbol	0

As shown in Figure 3.76, the training symbol of F1 is a copy of F12.

format (c)

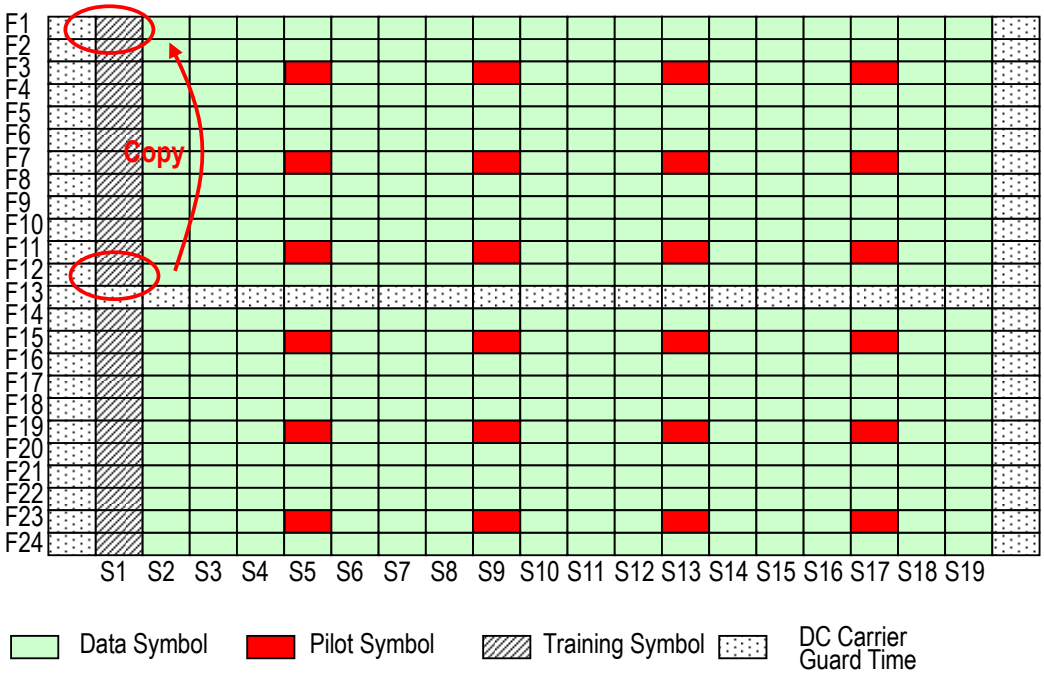

Figure 3.76 OFDM PRU Structure for EXCH format (c)

Table 3.28 Composition of EXCH format (c)

Symbol Name	Number of Symbols
Data Symbol	390
Training Symbol	23
Pilot Symbol	24
Null Symbol (DC Carrier)	19

As shown in Figure 3.77, the training symbol of F13 is a copy of F24.

format (d)

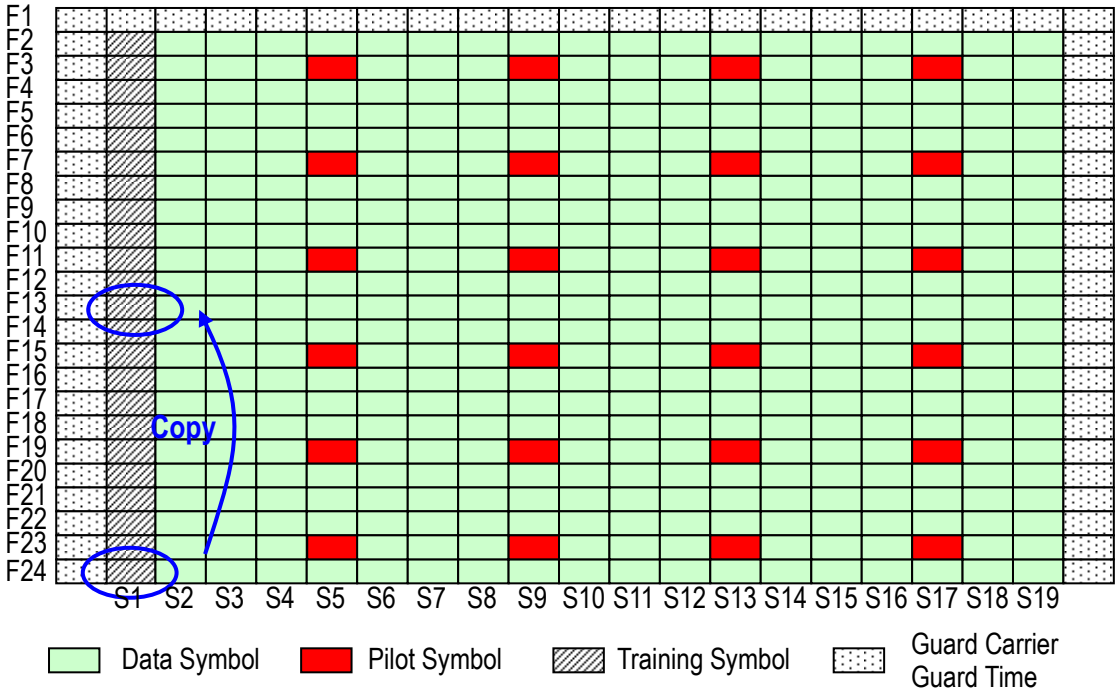

Figure 3.77 OFDM PRU Structure for EXCH format (d)

Table 3.29 Composition of EXCH format (d)

Symbol Name	Number of Symbols
Data Symbol	390
Training Symbol	23
Pilot Symbol	24
Null symbol (Guard Carrier)	19

3.4.8.1.4 OFDM PRU Structure for CSCH

The PRU diagram shown in Figure 3.78 is the diagram about CSCH for DL. As shown in the figure and Table 3.30, CSCH is composed of data symbols, signal symbols, pilot symbols, training symbols and null symbols (DC carrier, Guard carrier).

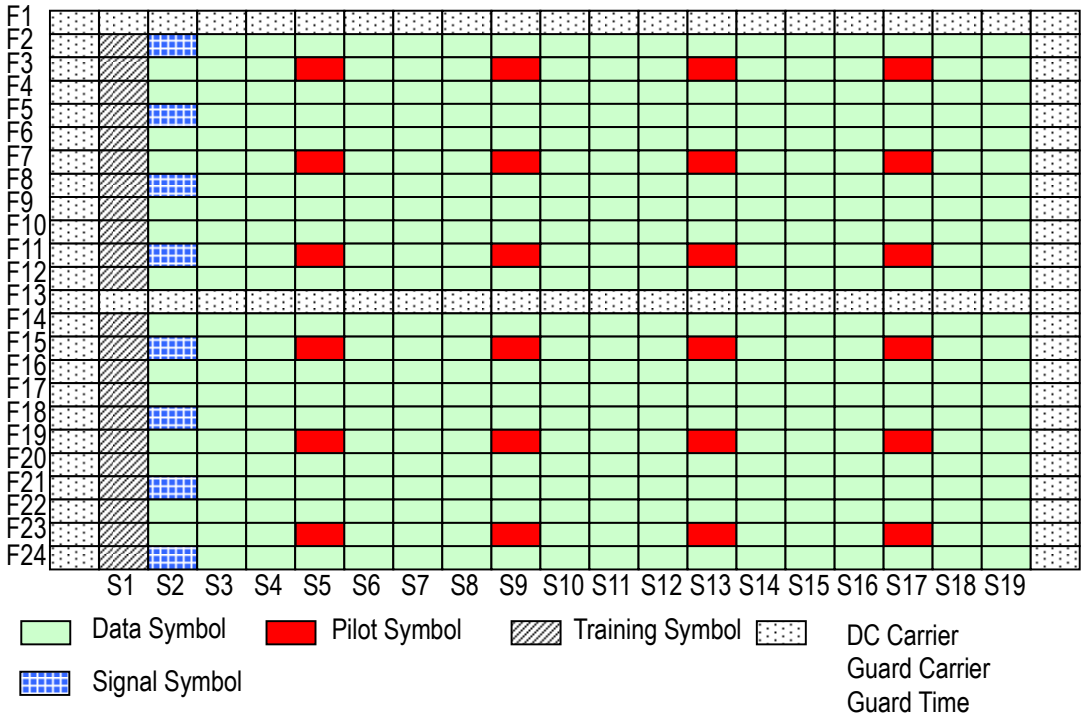

Figure 3.78 OFDM PRU Structure for CSCH

Table 3.30 Composition of CSCH

Symbol Name	Number of Symbols
Data Symbol	364
Signal Symbol	8
Training Symbol	22
Pilot Symbol	24
Null Symbol (DC Carrier, Guard Carrier)	38

3.5 UL OFDM PHY Layer

Figure 3.79 describes a transmitter block diagram for OFDM transmission method.

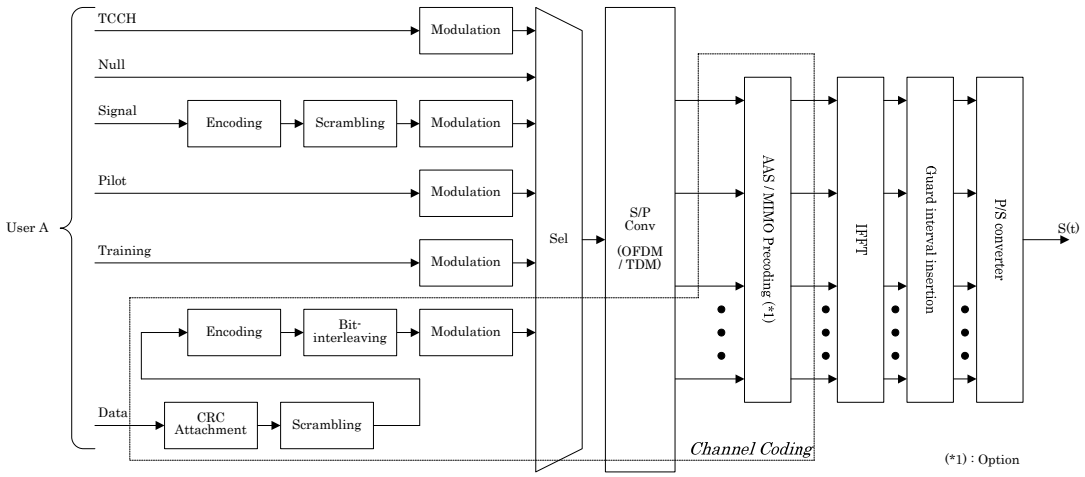

Figure 3.79 Transmitter Block Diagram

3.5.1 Channel Coding for PHY Frame

Refer to Section 3.4.1.

3.5.1.1 CRC

Refer to Section 3.4.1.1.

3.5.1.2 Scrambling

Refer to Section 3.4.1.2.

3.5.1.3 Encoding

Refer to Section 3.4.1.3.

3.5.1.4 Bit-interleaving

Refer to Section 3.4.1.4.

3.5.1.5 Modulation Method

Refer to Section 3.4.1.5.

a) BPSK
Refer to Appendix B.1.
b) QPSK
Refer to Appendix B.3.
c) 16QAM
Refer to Appendix B.6.
d) 64QAM
Refer to Appendix B.7.
e) 256QAM
Refer to Appendix B.8.

3.5.1.6 Precoding Method

Refer to Section 3.4.1.6

3.5.1.6.1 MS Transmission Antenna Switching

This function is applied to the MIMO method for which CSI is necessary in the transmitting side. For example, MS has one RF transmitter and plural RF receivers as shown in Figure 3.80. Transmission antenna switching can be used in such a case to achieve multiple streams for one MS. Antenna switching timing, i.e. switching every slot or every frame, is negotiated in negotiation phase.

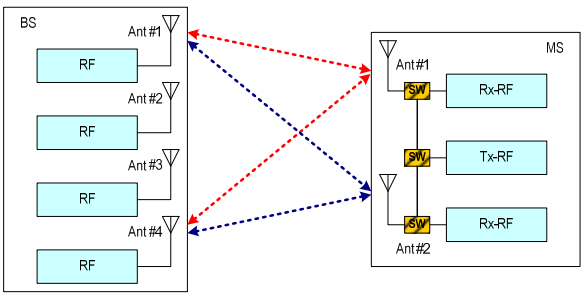

Figure 3.80 Multiple streams for MS with one Tx-RF and plural Rx-RF

3.5.1.7 Symbol Mapping Method to PRU

Refer to Section 3.4.1.7.

3.5.1.8 Summary of OFDM UL Channel Coding

Refer to Section 3.4.1.8.

3.5.1.9 Training for UL OFDM

Refer to Section 3.4.2.

3.5.1.10 UL Training Sequence for MS transmission frame antenna switching

When the number of MS transmitter is one and the number of MS transmission antenna is two or more and MS supports antenna switching, UL core-sequence number for MS transmission frame antenna switching is calculated as follows:
UL Core-sequence Number : x = [(A+{Fk -1 MOD 4}) MOD 12] + 1
Fk = active frame number (Fk=1,2,…)
Fk is incremented every frame. Fk shall be initialized each scheduling term.
The parameter except for UL core-sequence number is same as Section 3.4.2.3.2.2.

3.5.1.11 UL Training Sequence for MS transmission slot antenna switching

When the number of MS transmitter is one and the number of MS transmission antenna is two or more and MS supports antenna switching, UL core-sequence number for MS transmission slot antenna switching is calculated as follows:
UL Core-sequence Number : x = [(A+{Sk -1 MOD 4}) MOD 12] + 1
Sk = absolute slot number (Sk=1,2,3,4)
The parameter except for UL core-sequence number is same as Section 3.4.2.3.2.2.

3.5.2 Pilot for UL OFDM

Refer to Section 3.4.3.

3.5.3 Signal for UL OFDM

Refer to Section 3.4.5.

3.5.4 Null (DTX/DC Carrier/Guard Carrier) for UL OFDM

Refer to Section 3.4.6.

3.5.5 TCCH Format for UL OFDM

3.5.5.1 TCCH Format

TCCH is mainly used to request connection of individual channel from MS to BS, and to correct transmission timing and transmission power according to measurement result at the channel concerned. As shown in Figure 3.81, 3/8 of TCCH original data (the third OFDM data) is copied ahead of the first OFDM data. The phase of this format must be consecutive. As described in Section 3.5.6.1.2, TCCH symbols ({S3, S4, S5}, {S7, S8, S9}, {S11, S12, S13} and {S15, 16, S17}) are used for TCCH. TCCH original data (the third OFDM data) is decided by the TCCH core-sequence number as described in Section 3.5.5.2.

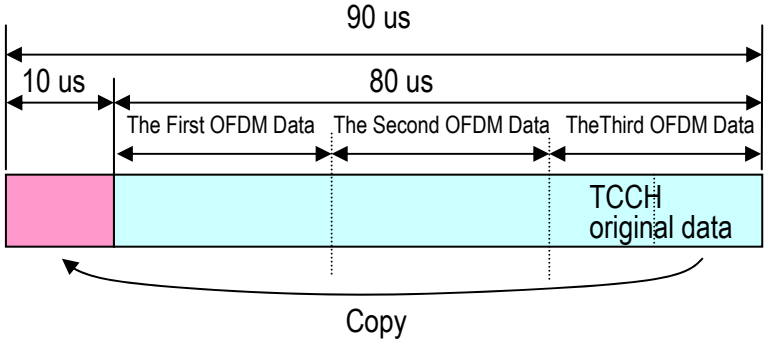

Figure 3.81 TCCH Format for OFDM

3.5.5.2 TCCH Sequence and TCCH Sub-slot

TCCH core-sequence number is described in Appendix D.1. TCCH sub-slots number is described in Section 3.5.6.1.2. The application patterns of TCCH core-sequence number and TCCH sub-slot number are described in Chapter 5.

3.5.6 PRU Structure for UL OFDM

The PRU structure for UL OFDM defined in this chapter is shown in Table 3.16.

Table 3.31 PRU Structure for UL OFDM

Channel Name			Format Type	Layer
CCH	CCCH	Common Control Channel	-	1
	TCCH	Timing Correct Channel	-	-
ICH	ANCH	Anchor Channel	format 1	1
			format 2	1
			format 3	2
			format 4	4
	EXCH	Extra Channel	format 1	1
			format 2	2
			format 4	4
	CSCH	Circuit Switching Channel	-	1

3.5.6.1 CCH for UL OFDM

3.5.6.1.1 OFDM PRU Structure for CCCH

Refer to Section 3.4.8.1.1.

3.5.6.1.2 OFDM PRU Structure for TCCH

The PRU diagram shown in Figure 3.82 is the diagram about TCCH for UL. As shown in the figure, there are four sub-slots for TCCH, each of which is composed of three TCCH symbols({S3, S4, S5}, {S7, S8, S9}, {S11, S12, S13} and {S15, S16, S17}).

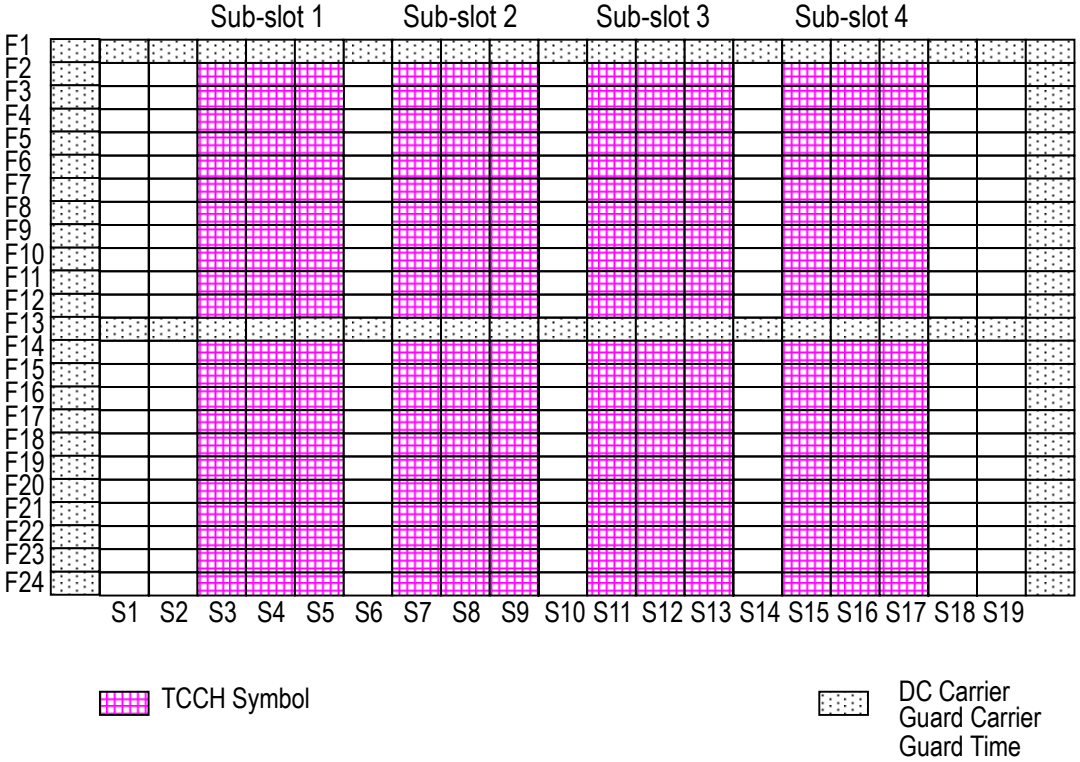

Figure 3.82 OFDM PRU Structure for TCCH

Table 3.32 Composition of TCCH

Symbol Name	Number of Symbols
TCCH Symbol	66 x 4 sub-slots

3.5.6.2 ICH for UL OFDM

3.5.6.2.1 OFDM PRU Structure for ANCH

Refer to Section 3.4.8.1.2.

3.5.6.2.2 OFDM PRU Structure for EXCH

The PRU diagrams in shown Figure 3.83, Figure 3.84 and Figure 3.86 are the diagrams about EXCH for UL. As shown in these figures, there are three kinds of EXCH formats. EXCH format (1) is used in case of 1 layer. EXCH Format (2) and (4) are used in case of 2 and 4 layers for SM and STBC-MIMO. There are two and four kinds of arrangement for pilot and training symbols. When one antenna transmits the reference symbol, the other antenna(s) transmits not pilot and training symbols but null symbol. The data symbols are transmitted from each antenna. Note that full subcarrier mode is not used for UL.

format (1)

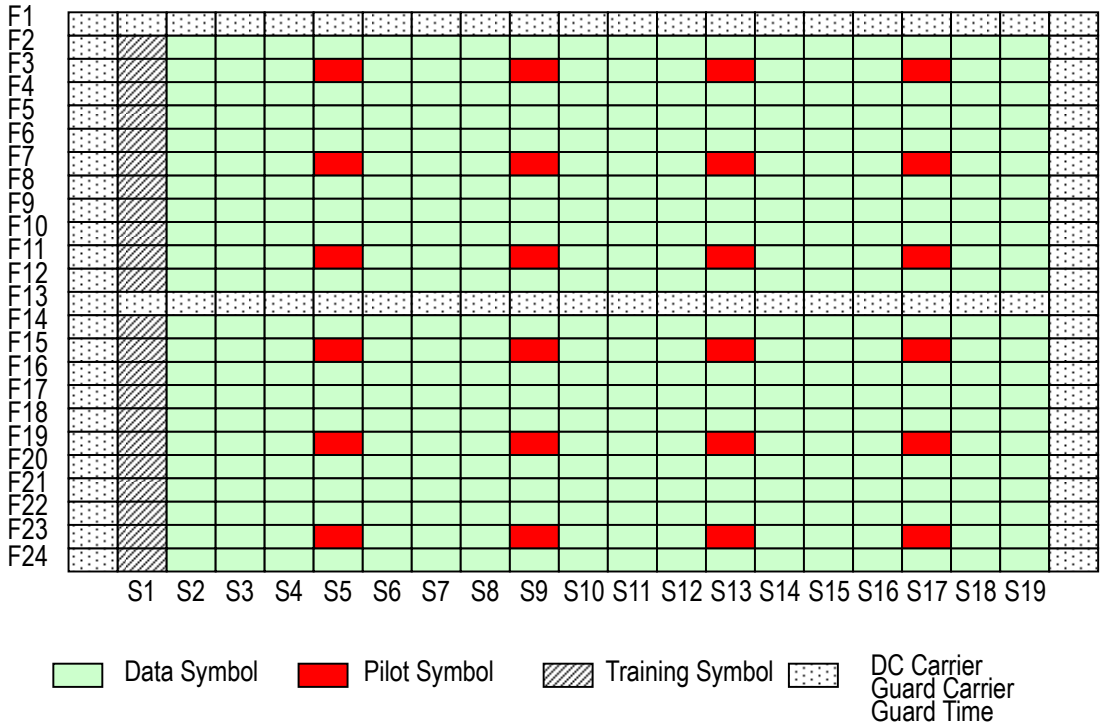

Figure 3.83 OFDM PRU Structure for EXCH format (1a)

Table 3.33 Composition of EXCH format (1)

Symbol Name	Number of Symbols
Data Symbol	372
Training Symbol	22
Pilot Symbol	24
Null Symbol (DC carrier, Guard Carrier)	38

format (2)

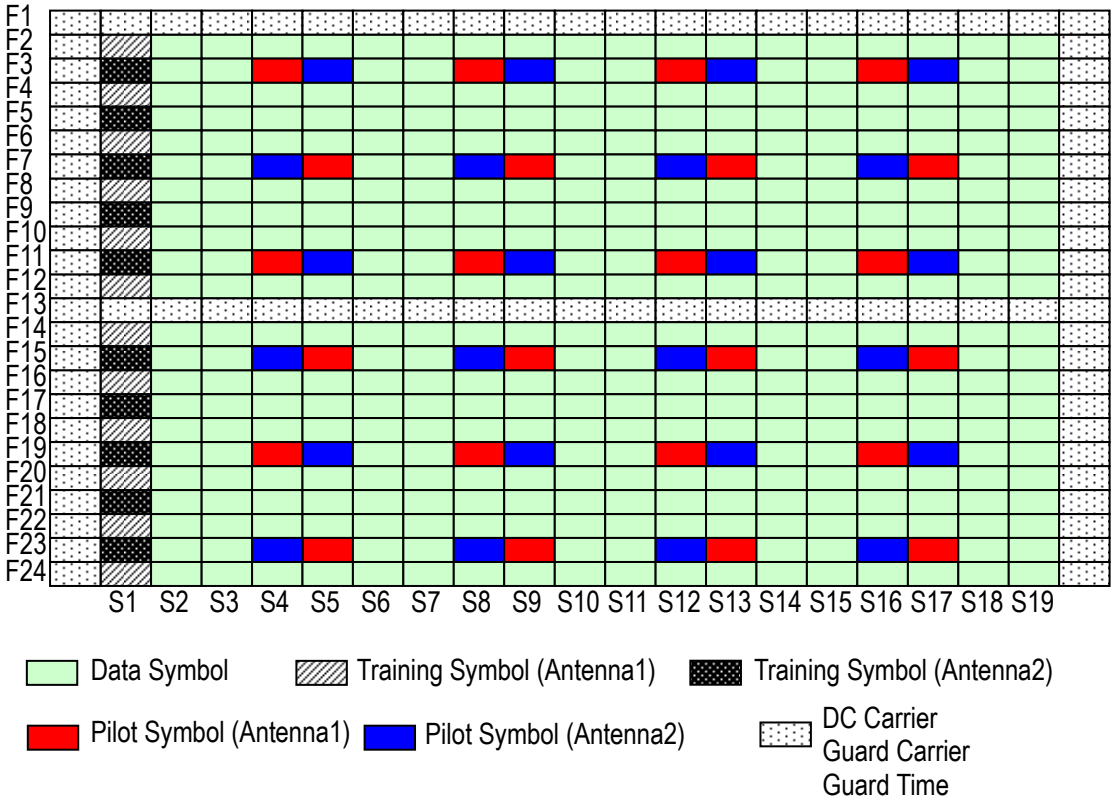

Figure 3.84 OFDM PRU Structure for EXCH format (2)

Table 3.34 Composition of EXCH format (2)

Symbol Name	Number of Symbols
Data Symbol	348
Training Symbol(Antenna 1)	12
Training Symbol(Antenna 2)	10
Pilot Symbol(Anntenna 1)	24
Pilot Symbol(Anntenna 2)	24
Null Symbol (DC carrier, Guard Carrier)	38

format (4)

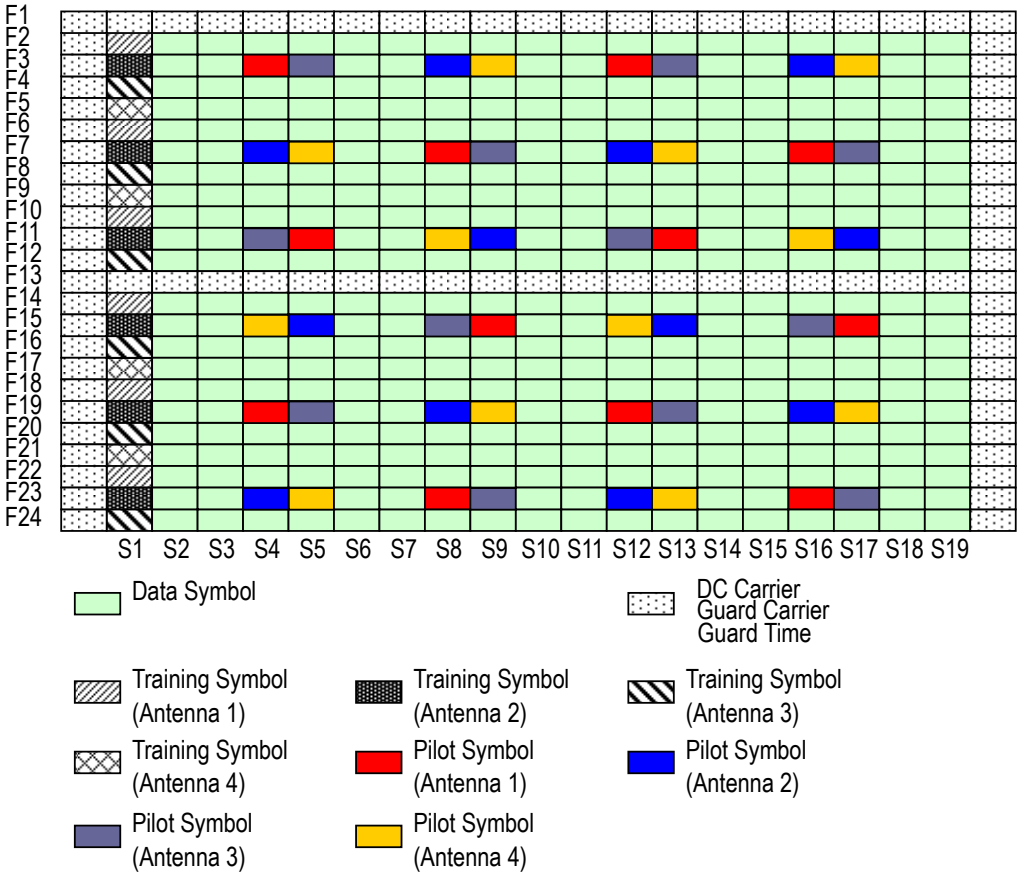

Figure 3.85 OFDM PRU Structure for EXCH format (4)

Table 3.35 Composition of EXCH format (4)

Symbol Name	Number of Symbols
Data Symbol	348
Training Symbol(Anntenna 1)	6
Training Symbol(Anntenna 2)	6
Training Symbol(Anntenna 3)	6
Training Symbol(Anntenna 4)	4
Pilot Symbol(Anntenna 1)	12
Pilot Symbol(Anntenna 2)	12
Pilot Symbol(Anntenna 3)	12
Pilot Symbol(Anntenna 4)	12
Null Symbol (DC carrier, Guard Carrier)	38

3.5.6.2.3 OFDM PRU Structure for CSCH

Refer to Section 3.4.8.1.4.

3.6 UL SC PHY Layer

Figure 3.86 describes a transmitter block diagram for SC transmission method.

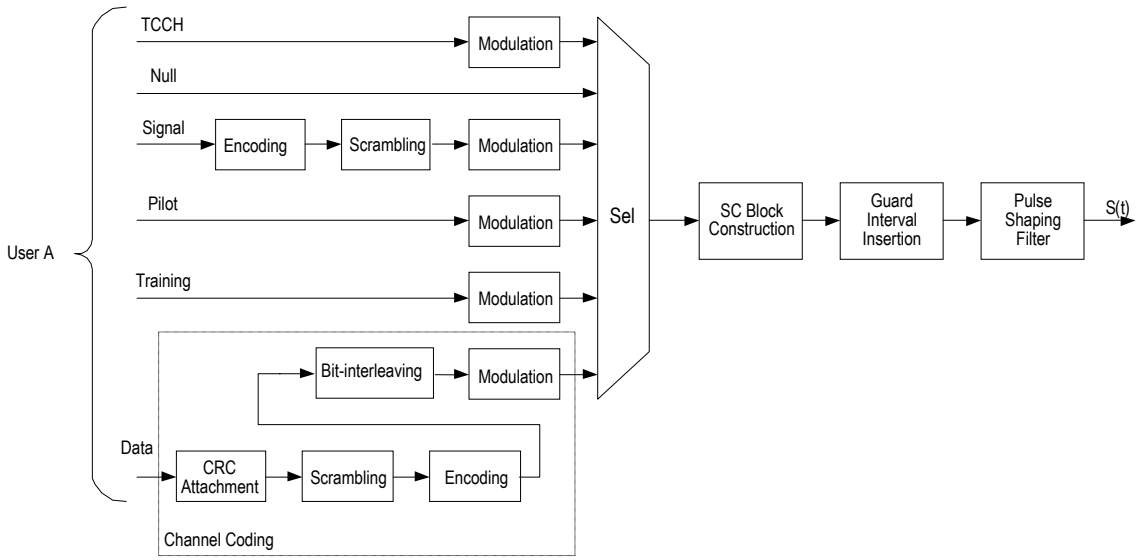

Figure 3.86 Transmitter Block Diagram for SC Transmission Method

Figure 3.87 describes an optional transmitter block diagram for SC transmission method.

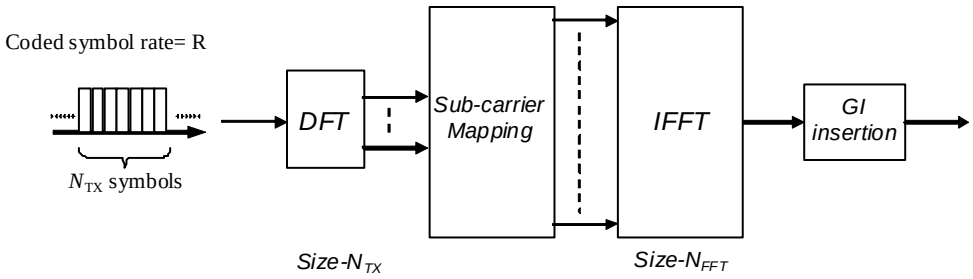

Figure 3.87 Transmitter structure for SC-FDMA

3.6.1 Channel Coding for PHY Frame

PHY frame consists of one or more Cyclic Redundancy Check (CRC) data unit(s). CRC-bits are first appended to the CRC data unit. Then tail-bits are appended to the CRC data unit with

CRC-bits after performing scrambling. CRC unit is defined as the scrambled CRC data unit with CRC-bits and tail-bits. The size of CRC unit is described in Section 3.6.7.3. The CRC unit is encoded according to error correction code. Then, bit-interleaving is performed for error correction coded bits. When performing bit-interleaving, rate matching shall be applied by puncturing some of coded bits if virtual GI extension is used. Then, the output bits of bit-interleaving are converted to IQ signals by modulation method.

Figure 3.88 describes the channel coding block diagram for UL SC from Figure 3.86.

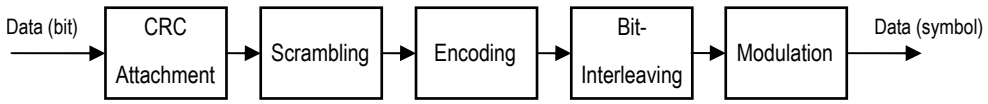

Figure 3.88 Channel Coding for SC

3.6.1.1 CRC

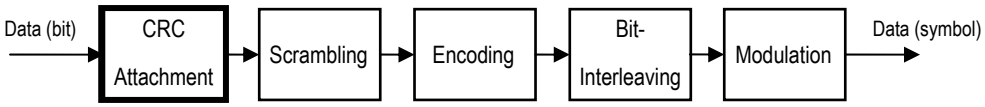

Figure 3.89 CRC Attachment

Refer to Section 3.4.1.1.

3.6.1.2 Scrambling

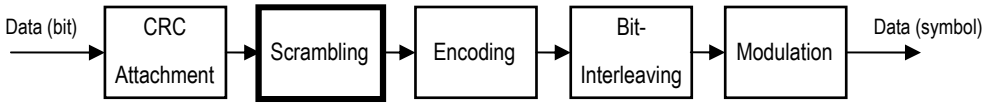

Figure 3.90 Scrambling

Refer to Section 3.4.1.2.

3.6.1.3 Encoding

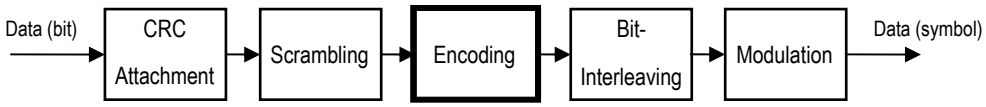

Figure 3.91 Encoding

Refer to Section 3.4.1.3.

3.6.1.4 Bit-interleaving

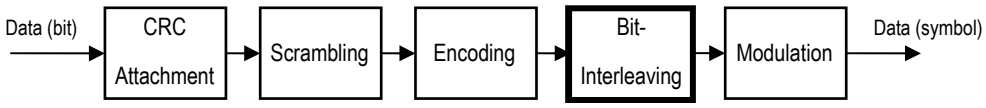

Figure 3.92 Bit-interleaving

3.6.1.4.1 Bit-interleaver Structure

Refer to Section 3.4.1.4.1.

3.6.1.4.2 Block Interleaver Method

Refer to Section 3.4.1.4.5.2.

3.6.1.4.3 Interleaver Parameters for UL SC

Table 3.36 to Table 3.39 summarize the parameters of the interleaver for input bit size and modulation class. In Table 3.28, position to start reading (A) is used when the puncturing rate R2 is 1 or 4/6 at the convolutional encoder. Position to start reading (B) is used when the puncturing rate R2 is 3/4 or 6/10 at the convolutional encoder.

Table 3.36 Interleaver Parameter M and N

Physical Channel	Number of Symbols: y	M	N
CCH	240	15	16
ICH (One PRU)	256	16	16
ICH (Otherwise)	512	32	16

Table 3.37 Interleaver Parameter

Modulation	The Number of Block Interleavers
BPSK	1
QPSK	2
8PSK	3
16QAM	4
64QAM	6
256QAM	8

Table 3.38 The Definition of Bit Position i in a Symbol

Modulation	Bit Position i in a Symbol
BPSK	i = (1)
QPSK	i = (1,2)
8PSK	i = (1,2,3)
16QAM	i = (1,2,3,4)
64QAM	i = (1,2,3,4,5,6)
256QAM	i = (1,2,3,4,5,6,7,8)

Table 3.39 Starting Position for Interleaver

Bit Position i in a Symbol	Position to Start Writing	Position to Start Reading (A)	Position to Start Reading (B)
1	$a_{1,1}$	$a_{1,1}$	$a_{1,1}$
2	$a_{1,1}$	$a_{1,2}$	$a_{1,1}$
3	$a_{1,1}$	$a_{1,3}$	$a_{1,2}$
4	$a_{1,1}$	$a_{1,4}$	$a_{1,2}$
5	$a_{1,1}$	$a_{1,8}$	$a_{1,2}$
6	$a_{1,1}$	$a_{1,9}$	$a_{1,1}$
7	$a_{1,1}$	$a_{1,10}$	N/A
8	$a_{1,1}$	$a_{1,7}$	N/A

3.6.1.4.4 Rate Matching Method

Rate matching is applied only when the virtual GI extension is used for SC. Table 3.40 shows the matching rate of Rate Matching (Rm) for different symbol rates. Figure 3.93 shows the deleting bit positions of rate matching for CCH defined in the form of block interleaver matrix of 16-column and 15-row (N=16, M=15). Figure 3.94 shows the deleting bit positions of rate matching pattern A for ICH in the form of block interleaver matrix of 16-column and 16-row (N=16, M=16). Figure 3.95 to Figure 3.97 show the deleting bit positions of rate matching pattern B1 to B3 for ICH in the form of block interleaver matrix of 16-column and 16-row, respectively.
For ICH, when the puncturing rate R2 is 1 or 4/6 at convolutional encoder, pattern A is used. When the puncturing rate R2 is 3/4 or 6/10 at convolutional encoder, patterns B1, B2 and B3 are periodically used in an order such as B1 for the first block interleaver, B2 for the second block interleaver, B3 for the third block interleaver and so on.
When the number of input bits is 512, two rate matching patterns are simply concatenated to define the pattern for the block interleaver of 16-column and 32-row (N=16 and M=32). When using pattern B1, B2 and B3, appropriate pairs are (B1, B2), (B3, B1) and (B2, B3). These pairs (B1, B2), (B3, B1) and (B2, B3) are periodically used in an order such as (B1, B2) for the first block interleaver, (B3, B1) for the second block interleaver, (B2, B3) for the third block interleaver and so on. The pattern (Bi, Bj) means that Bi spans the first 16-row and Bj spans the last 16-row of the block interleaver matrix.
Table 3.41 to Table 3.44 summarize the deleting bit numbers when a1,1 is the starting position to read out of the block interleaver. When the coding rate R is 7/8 at the convolutional encoder, virtual GI extension is not applied.

Table 3.40 Rate Matching Parameters

Parameter		Type1	Type2	Type3	Type4	Type5
Symbol Rate [Msps]		0.6	1.2	2.4	4.8	9.6
Matching Rate: Rm	CCH	206/240	N/A	N/A	N/A	N/A
	ICH	220/256	238/256	251/256	N/A	N/A

(*) N/A: Not Available

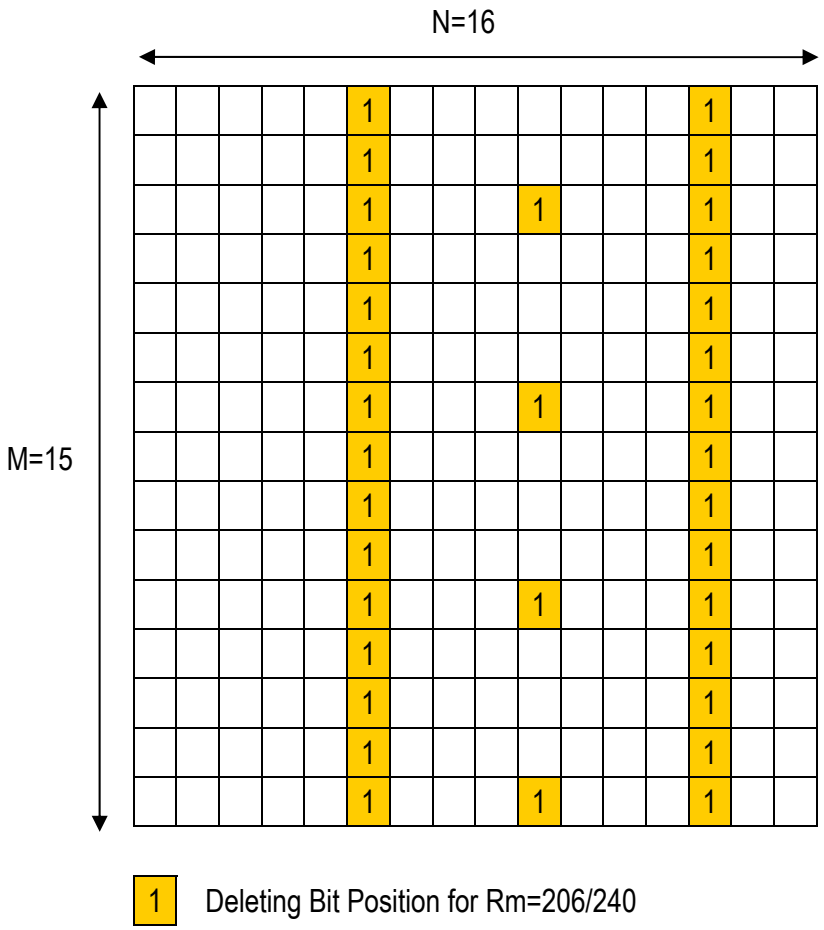

Figure 3.93 Deleting Bit Position for CCH: Pattern A

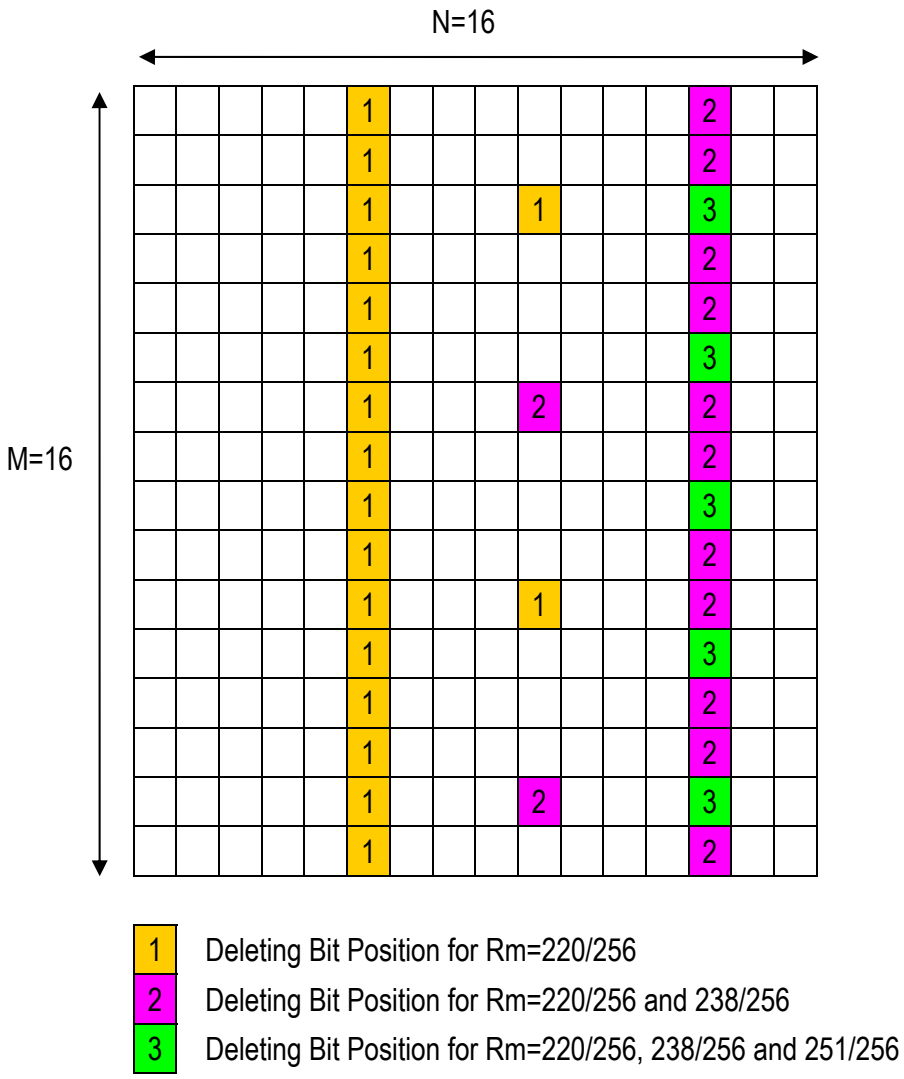

Figure 3.94 Deleting Bit Position for ICH: Pattern A

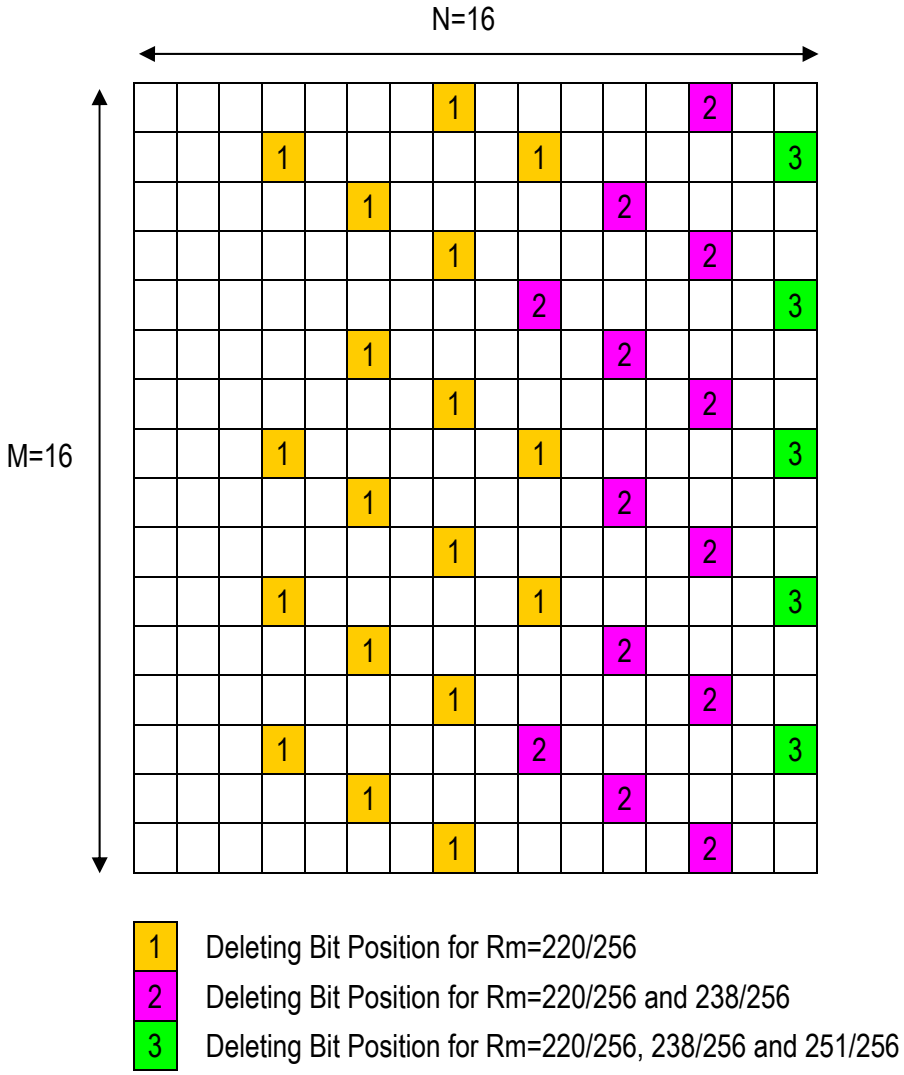

Figure 3.95 Deleting Bit Position for ICH: Pattern B1

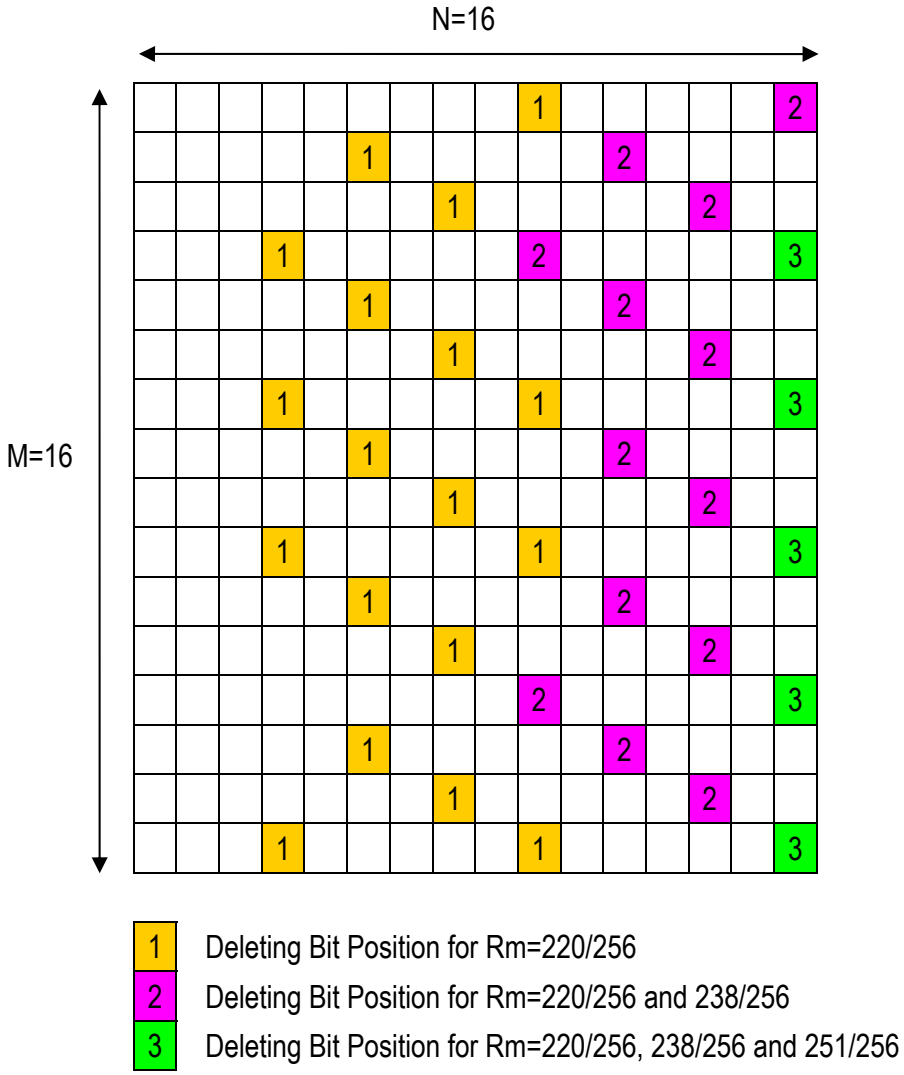

Figure 3.96 Deleting Bit Position of ICH: Pattern B2

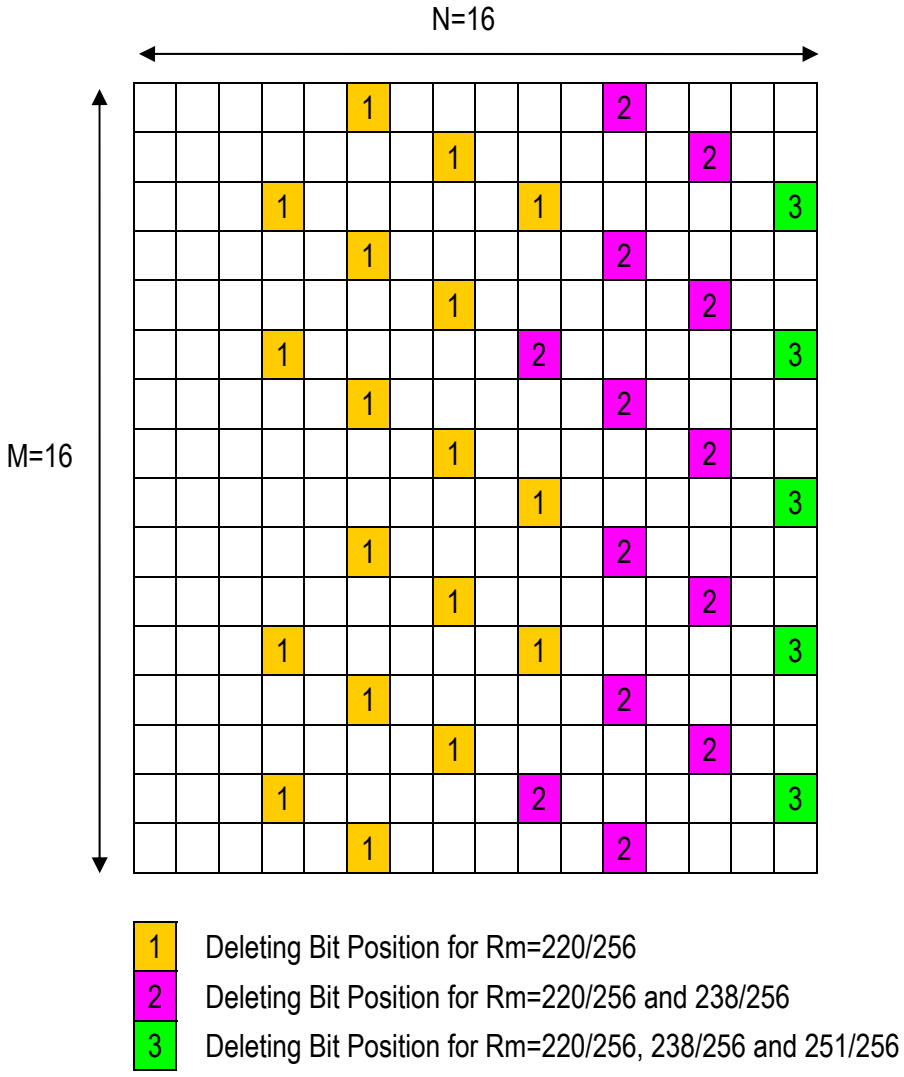

Figure 3.97 Deleting Bit Position of ICH: Pattern B3

Table 3.41 Rate Matching Pattern for CCH

Rm	Puncturing Rate @CC	Pattern	Deleting Bit Number (1 - 240)
206/240	1	A	76-90, 138, 142, 146, 150, 196-210

Table 3.42 Rate Matching Pattern 1 for ICH

Rm	Puncturing Rate @CC	Pattern	Deleting Bit Number (1 - 256)
220/256	1, 4/6	A	81-96, 147, 151, 155, 159, 209-224
	3/4, 6/10	B1	50, 56, 59, 62, 83, 86, 89, 92, 95, 113, 116, 119, 122, 125, 128, 146, 149, 152, 155, 158, 179, 182, 185, 188, 191, 209, 212, 215, 218, 221, 224, 242, 245, 248, 251, 254
		B2	52, 55, 58, 64, 82, 85, 88, 91, 94, 115, 118, 121, 124, 127, 145, 148, 151, 154, 157, 160, 178, 181, 184, 187, 190, 211, 214, 217, 220, 223, 241, 244, 247, 250, 253, 256
		B3	51, 54, 60, 63, 81, 84, 87, 90, 93, 96, 114, 117, 120, 123, 126, 147, 150, 153, 156, 159, 177, 180, 183, 186, 189, 192, 210, 213, 216, 219, 222, 243, 246, 249, 252, 255

Table 3.43 Rate Matching Pattern 2 for ICH

Rm	Puncturing Rate @CC	Pattern	Deleting Bit Number (1 - 256)
238/256	1, 4/6	A	151, 159, 209-224
	3/4, 6/10	B1	149, 158, 179, 182, 185, 188, 191, 209, 212, 215, 218, 221, 224, 242, 245, 248, 251, 254
		B2	148, 157, 178, 181, 184, 187, 190, 211, 214, 217, 220, 223, 241, 244, 247, 250, 253, 256
		B3	150, 159, 177, 180, 183, 186, 189, 192, 210, 213, 216, 219, 222, 243, 246, 249, 252, 255

Table 3.44 Rate Matching Pattern 3 for ICH

Rm	Puncturing Rate @CC	Pattern	Deleting Bit Number (1 - 256)
251/256	1, 4/6	A	211, 214, 217, 220, 223
	3/4, 6/10	B1	242, 245, 248, 251, 254
		B2	244, 247, 250, 253, 256
		B3	243, 246, 249, 252, 255

3.6.1.4.5 Output-bits After Bit-interleaver

The IQ data symbol is generated by using x bits, each of which is taken from each block interleaver after applying the rate matching. Denote the output bits from i-th block interleaver by z(i,1), z(i,2), …, z(i,y'), where y' is Rm*y with rate matching or y' is y without rate matching. Thus, the j-th IQ data symbol is converted from the bit series $z(p_1,j)$, $z(p_2,j)$,…,$z(p_x,j)$, where p_i is a offset value to circulate the order of input bits to the modulator, and is defined as follows:

Input bits to the modulator: $z(p_1,j)$, $z(p_2,j)$,…,$z(p_x,j)$
Offset value: $p_i = ((i+j-2) \bmod x)+1$

3.6.1.5 Modulation Method

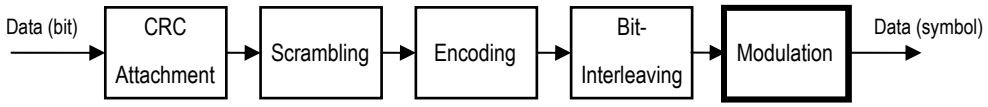

Figure 3.98 Modulation

The serial signal input after interleaving is converted to IQ Data symbol on each symbol. The modulation (π/2-BPSK, π/4-QPSK, 8PSK, 16QAM, 64QAM and 256QAM) is shown in Appendix B.

a) π/2-BPSK
Refer to Appendix B.2.
b) π/4-QPSK
Refer to Appendix B.4.
c) 8PSK
Refer to Appendix B.5.
d) 16QAM
Refer to Appendix B.6.
e) 64QAM
Refer to Appendix B.7.
f) 256QAM
Refer to Appendix B.8.

3.6.1.6 Symbol Mapping Method for Data Block

Symbol mapping methods depend on the types of physical channel (CCH, ANCH, EXCH and CSCH). The detail of the mapping method is described below.

3.6.1.6.1 Data Block

Figure 3.99 illustrates a data block structure for UL SC. Data block is a SC block composed of data symbols, in which N is the SC block size and G1 is the GI size. Data symbol mapping is performed by aligning the data symbols along the time axis. That is, data symbols from the modulator are mapped into the SC block by the order of D(1), D(2), …, D(N).

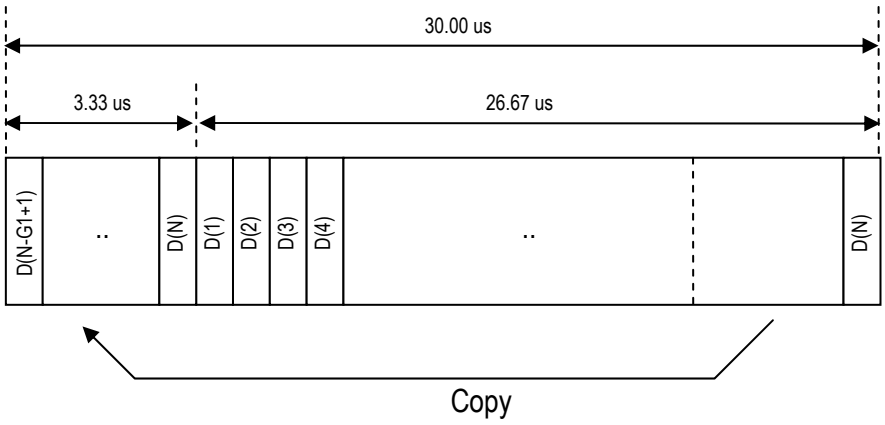

Figure 3.99 Symbol Mapping onto SC Block without Virtual GI Extension

3.6.1.6.2 Data Block with Virtual GI Extension

When the virtual GI extension is used, some symbols in the preceding SC block are copied into a data block. Figure 3.100 shows the SC block format (n-th SC block) in the case that virtual GI extension is used for data blocks (except for S8 and S16). In addition to this, data blocks S8 and S16 include copies of the pilot symbols from S9 and S17 respectively with virtual GI extension. Figure 3.101 shows the SC block format (n-th SC block) with virtual GI extension for data blocks S8 and S16. Parameters for virtual GI extension are summarized in Table 3.45. Virtual GI length is defined as the time length of SC block to which preceding or succeeding SC block is copied. Virtual GI size is defined as the number of symbols in the virtual GI length.

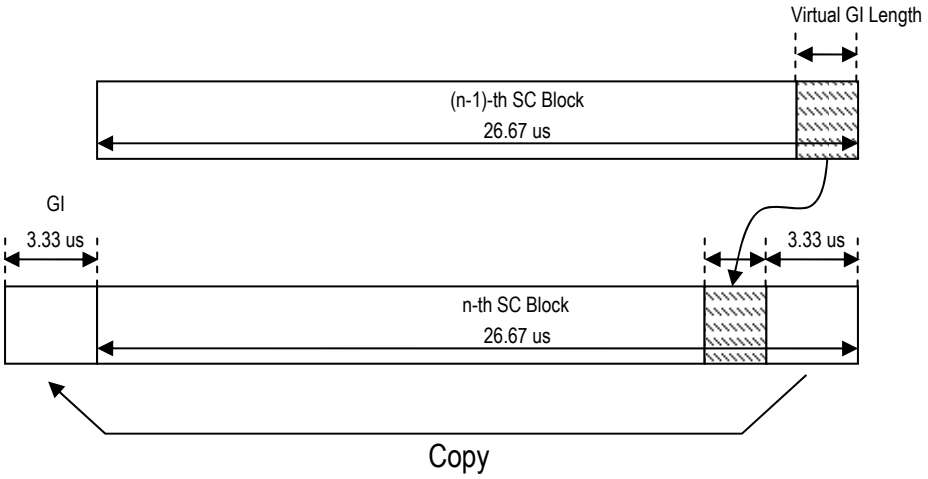

Figure 3.100 Symbol Mapping of SC Block with Virtual GI Extension (Data Blocks Except for S8 and S16)

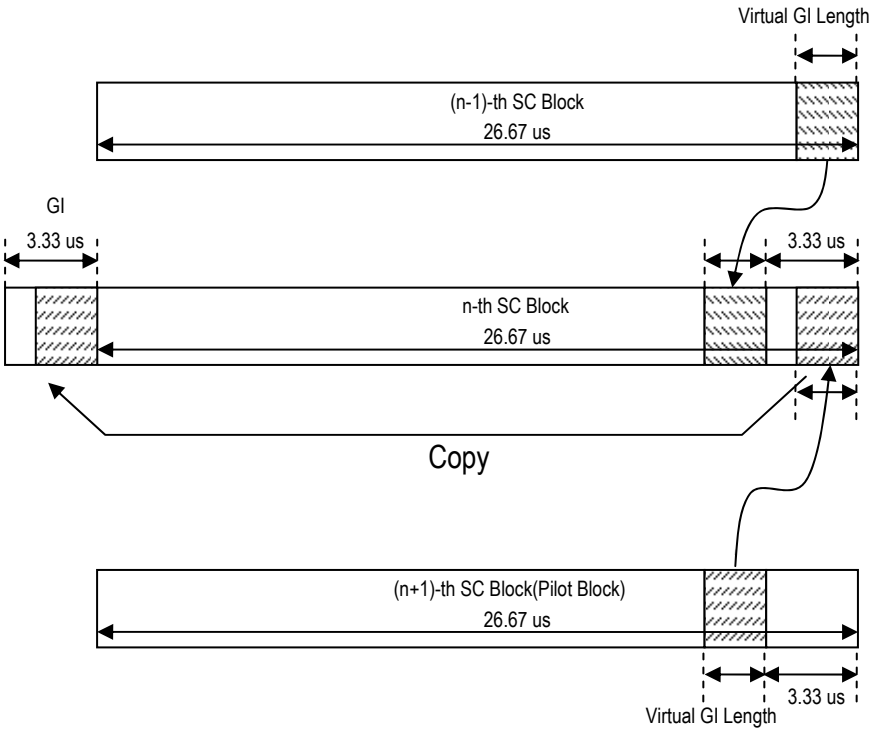

Figure 3.101 Symbol Mapping of SC Block with Virtual GI Extension (S8 and S16)

Table 3.45 Parameters for Virtual GI Extension for UL SC

Parameter	Type 1	Type 2	Type 3	Type 4	Type 5
Symbol Rate [Msps]	0.6	1.2	2.4	4.8	9.6
Virtual GI Length [us]	3.33	1.67	0.417	0	0
Virtual GI Size [symbol]	2	2	1	0	0

3.6.1.7 Symbol Mapping Method for SC Burst

3.6.1.7.1 Symbol Mapping Method without DTX Symbol

Figure 3.102, data symbol mapping is performed by aligning the data symbols along time axis in the SC burst except for the copied symbols in GI and virtual GI as described in Section 3.6.1.6.

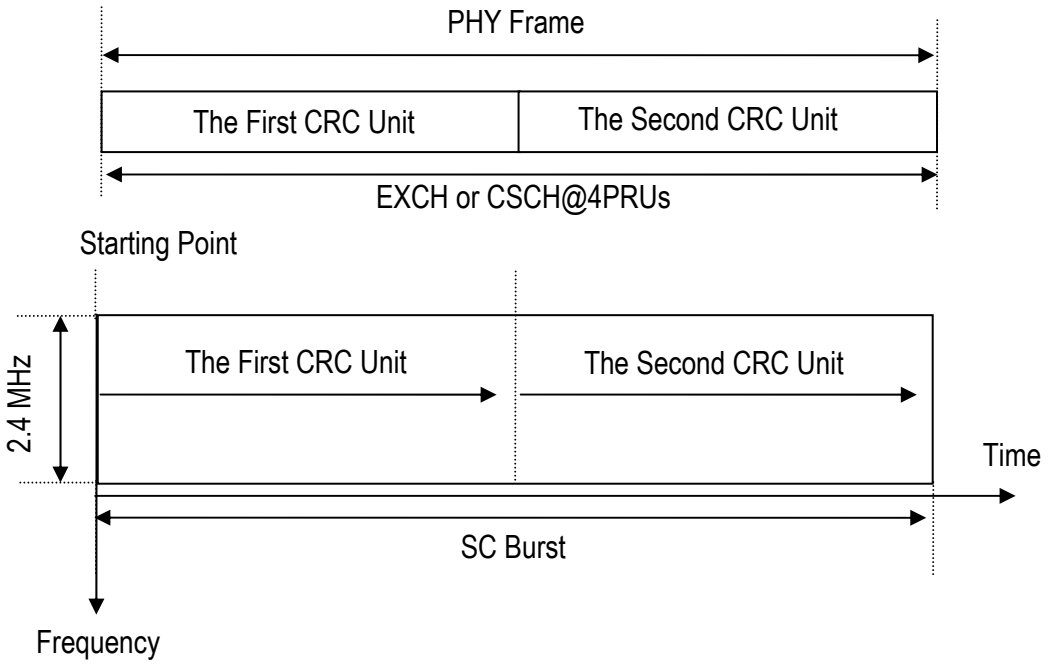

Figure 3.102 Data Symbol Mapping Method for SC Burst without DXT Symbols (2.4 Msps)

3.6.1.7.1.1 Symbol Mapping Method with DTX Symbol

DTX symbol is used in EXCH and CSCH when the SC burst can accommodate more CRC units than the number of CRC units to be transmitted as shown in Figure 3.103. All data blocks after mapping all CRC units in the SC burst are DTX symbols. Details of DTX symbol are described in Section 3.6.5.

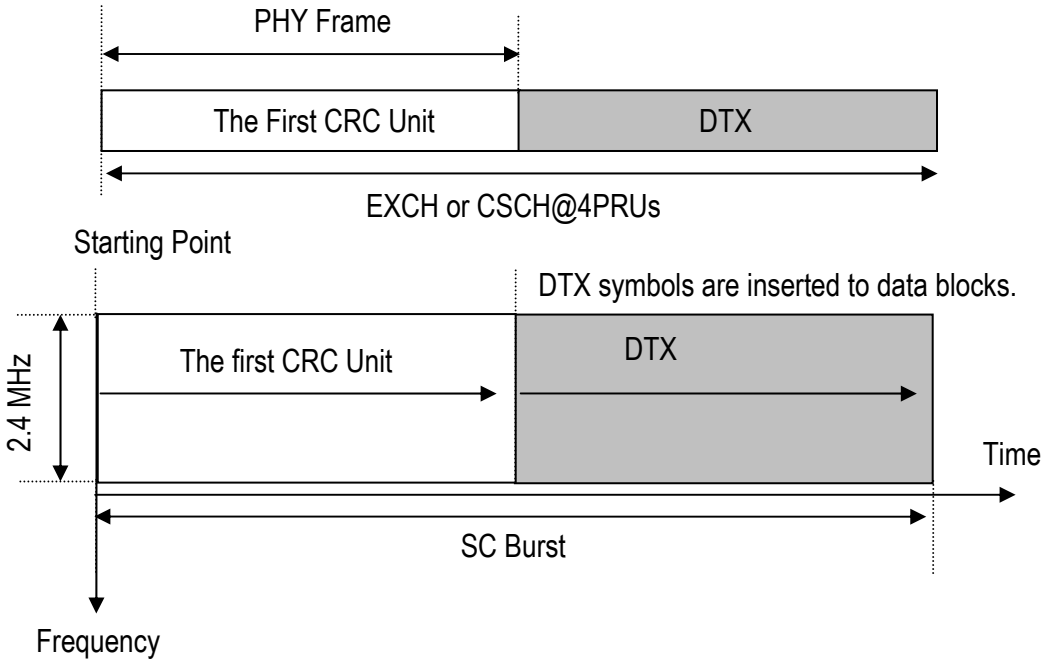

Figure 3.103 Data Symbol Mapping Method for SC Burst with DTX Symbols (2.4 Msps)

3.6.1.7.2 Symbol Mapping Method for Retransmission (CC-HARQ)

Figure 3.104 to Figure 3.106 illustrate the retransmission of CRC unit, in which retransmission CRC unit size is equal to, smaller than or larger than the available CRC unit size for retransmission respectively.

(a) The case when Retransmission CRC Unit Size equals to available CRC Unit Size

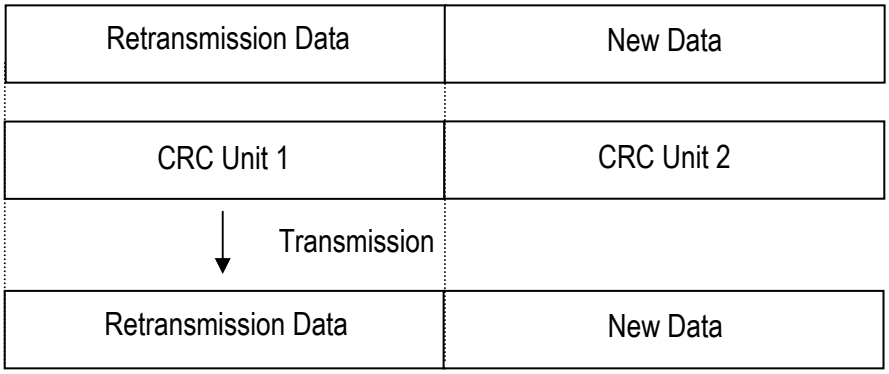

Figure 3.104 The case when Retransmission CRC Unit Size equals to available CRC Unit Size

(b) The case when Retransmission CRC Unit Size is less than available CRC Unit Size
As shown in Figure 3.105, the rest of CRC Unit 1 is used as DTX symbols.

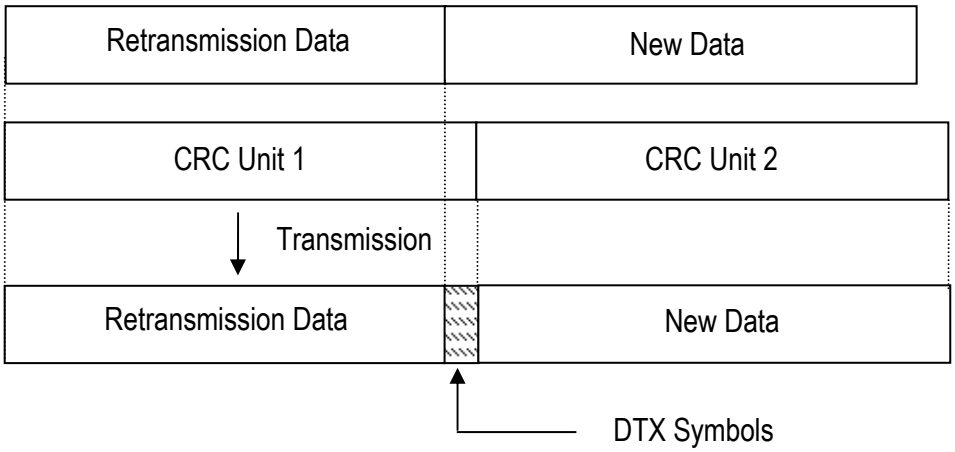

Figure 3.105 The case when Retransmission CRC Unit Size is less than available CRC Unit Size

(c) The case when Retransmission CRC Unit Size is larger than available CRC Unit Size
As shown in Figure 3.106, ,a part of retransmission data takes up the symbols that can be used by DTX symbols. In addition, a part of retransmission data might also take up the part that can be used by the guard time.

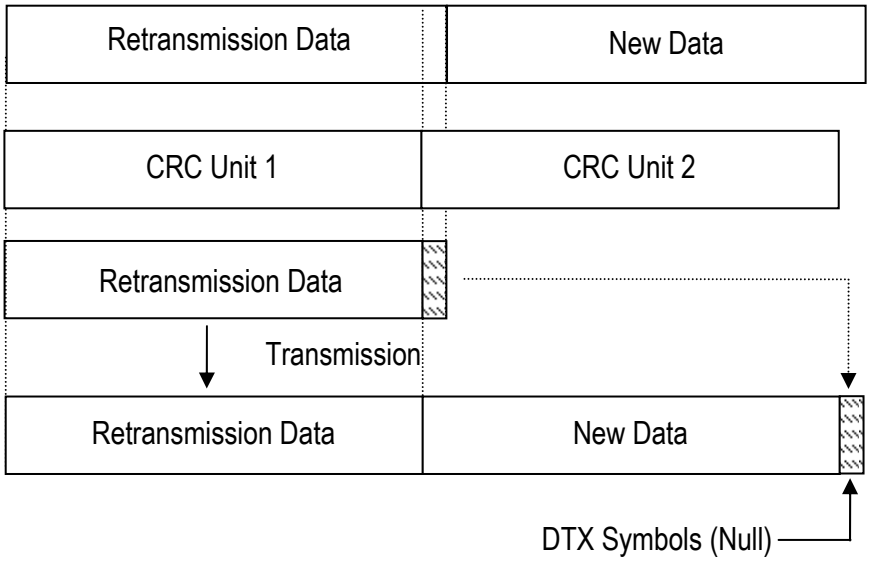

Figure 3.106 The case when Retransmission CRC Unit Size is larger than available CRC Unit Size

3.6.1.8 Summary of SC UL Channel Coding

Combinations of coding and modulation are shown in Table 3.46 for UL SC. Efficiency of each combination is shown in the same table. Efficiency is defined as the number of information bits carried by one data symbol in the SC burst. Efficiency and total coding rate are calculated assuming no virtual GI extension in the table. Note that actual efficiency becomes higher with virtual GI extension.

Table 3.46 Summary of UL SC Channel Coding

Modulation	Scaling Factor	Coding Rate @Convolutional Coding	Puncturing Rate R2	Total Coding Rate R	Efficiency
π/2-BPSK	1	1 / 2	1	1 / 2	0.5
			3 / 4	2 / 3	0.67
π/4-QPSK	1/√2		1	1 / 2	1
			4 / 6	3 / 4	1.5
8PSK	1		3 / 4	2 / 3	2
16QAM	1/√10		1	1 / 2	2
			4 / 6	3 / 4	3
64QAM	1/√42		3 / 4	4 / 6	4
			6 / 10	5 / 6	5
256QAM	1/√170		4 / 6	6 / 8	6
			8 / 14	7 / 8	7

3.6.1.9 Optional Channel Coding for PHY Frame

3.6.1.9.1 CRC

Refer to 3.4.1.1.

3.6.1.9.2 Channel coding

3.6.1.9.2.1 Tail biting convolutional coding

Refer to 3.4.1.3.1.3.

3.6.1.9.2.2 Turbo coding

Refer to 3.4.1.3.1.4.

3.6.1.9.3 Rate matching

Refer to 3.4.1.4.5

3.6.1.9.4 Code block concatenation

The code block concatenation consists of sequentially concatenating the rate matching outputs for the different code blocks.

3.6.1.9.5 Channel Coding of UL Channels

3.6.1.9.5.1 Coding of data and control information on AUEDCH

Data arrives to the coding unit in the form of a maximum of one transport block every transmission time interval (TTI). The following coding steps for the AUEDCH can be identified:

- Add CRC to the transport block
- Code block segmentation and code block CRC attachment
- Channel coding of data and control information
- Rate matching
- Code block concatenation
- Multiplexing of data and control information
- Channel interleaver

Control data arrives at the coding unit in the form of channel quality information (CQI and/or PMI), HARQ-ACK and rank indication. Different coding rates for the control information are achieved by allocating different number of coded symbols for its transmission. When control data are transmitted in the AUEDCH, the channel coding for HARQ-ACK, rank indication and channel quality information is done independently.

3.6.1.9.5.2 Coding of Uplink control information on AUANCH

Data arrives to the coding unit in the form of indicators for measurement indication, scheduling request and HARQ acknowledgement. Three forms of channel coding are used, one for the channel quality information CQI/PMI, another for HARQ-ACK (acknowledgement) and scheduling

request and another for combination of CQI/PMI and HARQ-ACK.

3.6.1.9.5.3 Uplink control information on AUEDCH without traffic data

When control data are sent via AUEDCH without traffic data, the following coding steps can be identified:

- Channel coding of control information
- Control information mapping
- Channel interleaver

3.6.2 Training for UL SC

Training block is a SC block used mainly for synchronization, frequency offset estimation, automatic gain control or weight calculation of beam-forming. Training block is composed of predefined data (Refer to Appendix C.2). The details of training block, training sequence and training pattern are described in Sections 3.6.2.1, 3.6.2.2, and 3.6.2.3.

3.6.2.1 Training Block Format

Training block is constructed by training symbols, T(1) – T(N) as defined in Appendix C.2. Training symbols are chosen according to the training index as defined in Section 3.6.2.3.

3.6.2.1.1 Training Format for ICH

Figure 3.107 illustrates the training block format for ICH, in which N is the SC block size and G2 is the GI size. In case of ICH, training data is the first SC block S1.

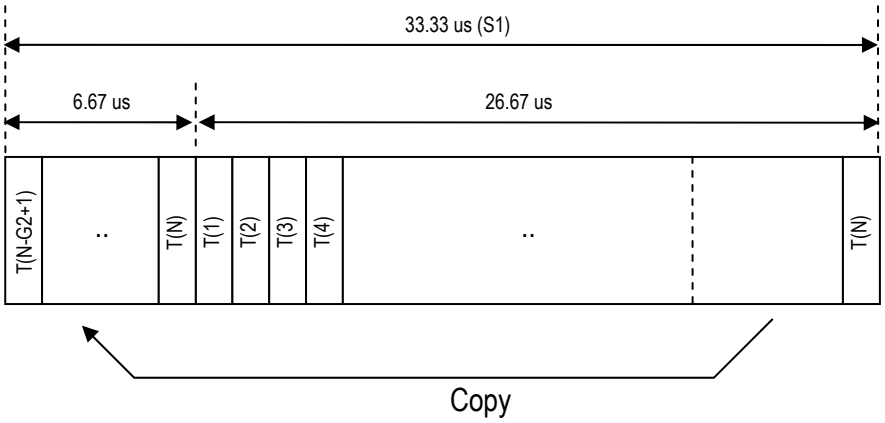

Figure 3.107 Training Format for ICH

3.6.2.1.2 Training Format for CCCH

Figure 3.108 illustrates the training format for CCCH. In case of CCCH, two training blocks S1 and S2 are used. Training symbols, T(1) – T(16), are mapped into S1 and S2 so that the training sequence repeats itself during the two SC blocks (S1 and S2) as shown in the figure.

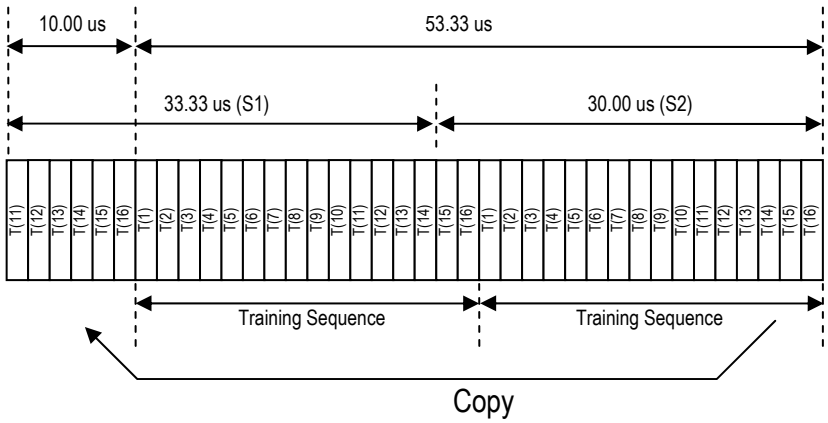

Figure 3.108 Training format for CCH

3.6.2.2 Training Sequence

Refer to Appendix C.2 for training sequence and offset values.

Eight core-sequences are defined in Table C.5 to Table C.10. These core-sequences are on the constellation of 8PSK or 16PSK as shown in Appendix B.5 or Appendix B.9. In addition to these core-sequences, cyclic-shifted versions of them are also used for constructing training for ICH and CCH as shown in Table C.12.

3.6.2.3 Training Index

As described in Section 3.6.2.2, there are 8 core-sequences and offset values (cyclic-shift values). Training index is numbered as follows:

Training Index = Core-sequence Number + (Offset Value Number-1)*8

3.6.2.3.1 Training Index for CCCH

Training index, core-sequence number and offset value number for CCH are defined as follows:

Training Index : 2
Core-sequence Number : 2
Offset Value Number : 1

3.6.2.3.2 Training Index for ICH

ICH is composed of ANCH, EXCH and CSCH. Training index, core-sequence number and offset value number for ICH are defined as follows:

Training Index : x + (y-1)*8
Core-sequence Number : x=[A MOD 8]+ 1
Offset Value Number : y=[{B+m} MOD (n-1)]+ 2

n = maximum number of SCHs in a slot
m = the smallest SCH number assigned to the MS in the slot (m=1,2,3,…)
A = 1st to 5th bits including LSB in BSID
B = 1st to 5th bits next to A in BSID

Training index, core-sequence number and offset value number for MIMO are defined as follows:

Training Index : x + (y-1)*8
Core-sequence Number : x=[{A+k-1} MOD 8]+ 1
Offset Value Number : y=[{B+m} MOD (n-1)]+ 2

k =MIMO stream number (k=1,2,…)
n = maximum number of SCHs in a slot
m = the smallest SCH number assigned to the MS in the slot (m=1,2,3,…)
A = 1st to 5th bits including LSB in BSID
B = 1st to 5th bits next to A in BSID

3.6.3 Pilot for UL SC

Figure 3.109 illustrates a pilot block format. Pilot block is a SC block used mainly for channel estimation. Pilot block consists of N pilot symbols, P(1) – P(N), as shown in this figure.

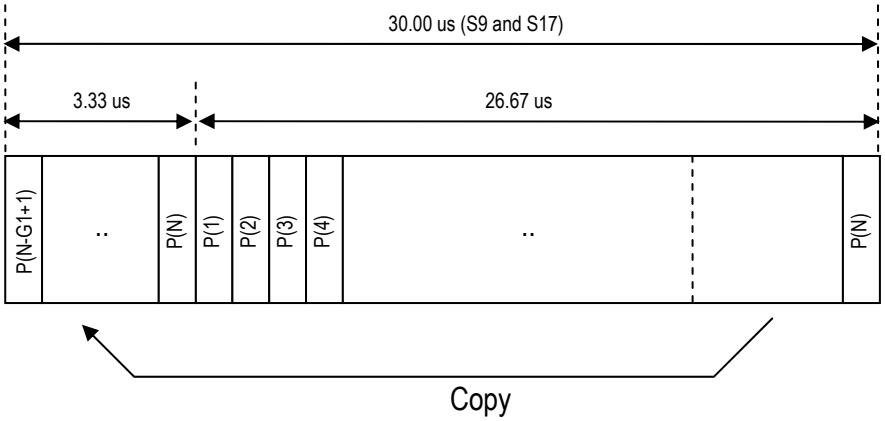

Figure 3.109 Pilot Block Format

3.6.3.1 Pilot Index

Pilot index is defined by eight core-sequences and offset values (cyclic-shift value) in the same way as training index described in Section 3.6.2.3. Pilot index is numbered as follows:

Pilot index = core-sequence number + (offset value number-1)*8

3.6.3.2 Pilot for CCCH

SC burst for CCCH has two pilot blocks at S9 and S17. Pilot block consists of 16 pilot symbols. Pilot symbols P(1) – P(16) in the both pilot blocks (S9 and S17) are the same as training symbols T(1) – T(16) in the training block S2 respectively. Pilot index is the same as training index in the same SC burst.

3.6.3.3 Pilot for ICH

3.6.3.3.1 Pilot for ANCH

SC burst for ANCH has two pilot blocks at S9 and S17. Pilot block consists of 16 pilot symbols. Pilot symbols P(1) – P(16) in both pilot blocks (S9 and S17) are the same as training symbols T(1) – T(16) in the training block S1 correspondingly. Pilot index is the same as training index in the same SC burst.

3.6.3.3.2 Pilot for EXCH

SC burst for EXCH has two pilot blocks at S9 and S17. Pilot block consists of 16 pilot symbols. Pilot symbols P(1) – P(N) in the both pilot blocks (S9 and S17) are the same as training symbols T(1) – T(N) in the training block S1 correspondingly. Pilot index is the same as training index in the same SC burst.

3.6.3.3.3 Pilot for CSCH

SC burst for CSCH has two pilot blocks at S9 and S17. Pilot symbols P(1) – P(N) in the pilot block S17 are the same as training symbols T(1) – T(N) in the training block S1 correspondingly. Pilot block S9 is different from as S17 for CSCH. For the symbol rate of 0.6 Msps (N=16), pilot symbols P(1) – P(N) in S9 are selected from Table C.5 in Appendix C.2 with the same pilot index. For 1.2 Msps and above (N>=32), pilot symbols in S9 are constructed by repeating the pilot block of half-length (N/2) with the same pilot index twice. Pilot block S9 is then modulated in order to multiplex signaling bits as described in Section 3.6.4.2.

3.6.3.4 Advanced Optional Pilot Signals

Two types of uplink pilot signals are supported:

- Advanced Demodulation Pilot Signal, associated with transmission of AUEDCH or AUANCH
- Advanced Sounding Pilot Signal

The same set of base sequences is used for Advanced Demodulation Pilot Signal and Advanced Sounding Pilot Signals.

Pilot signal sequence $r_{u,v}^{(\alpha)}(n)$ is defined by a cyclic shift α of a base sequence $\bar{r}_{u,v}(n)$ according to $r_{u,v}^{(\alpha)}(n) = e^{j\alpha n}\bar{r}_{u,v}(n), \quad 0 \le n < M_{\mathrm{sc}}^{\mathrm{Pilot}}$,where $M_{\mathrm{sc}}^{\mathrm{Pilot}} = mN_{\mathrm{sc}}^{\mathrm{RU}}$ is the length of the trainning signal sequence and $1 \le m \le N_{\mathrm{RU}}^{\max,\mathrm{UL}}$. Multiple pilot signal sequences are defined from a single base sequence through different values of α.

Base sequences $\bar{r}_{u,v}(n)$ are divided into groups, where $u \in \{0,1,...,29\}$ is the group number and v is the base sequence number within the group, such that each group contains one base sequence ($v = 0$) of each length $M_{\mathrm{sc}}^{\mathrm{Pilot}} = mN_{\mathrm{sc}}^{\mathrm{RU}}$, $1 \le m \le 5$ and two base sequences ($v = 0,1$) of each length $M_{\mathrm{sc}}^{\mathrm{Pilot}} = mN_{\mathrm{sc}}^{\mathrm{RU}}$, $6 \le m \le N_{\mathrm{RU}}^{\max,\mathrm{UL}}$. The definition of the base sequence $\bar{r}_{u,v}(0),...,\bar{r}_{u,v}(M_{\mathrm{sc}}^{\mathrm{Pilot}} - 1)$ depends on the sequence length $M_{\mathrm{sc}}^{\mathrm{Pilot}}$.

3.6.3.4.1 Advanced Demodulation Pilot signal

3.6.3.4.1.1 Advanced Demodulation Pilot signal sequence

The aAdvanced Demodulation Pilot Signal sequence $r^{\mathrm{AUEDCH}}(\cdot)$ for AUEDCH is defined by $r^{\mathrm{AUEDCH}}\left(m \cdot M_{\mathrm{sc}}^{\mathrm{Pilot}} + n\right) = r_{u,v}^{(\alpha)}(n)$, where $m = 0,1$; $n = 0,...,M_{\mathrm{sc}}^{\mathrm{Pilot}} - 1$ and $M_{\mathrm{sc}}^{\mathrm{RS}} = M_{\mathrm{sc}}^{\mathrm{AUEDCH}}$.

The aAdvanced Demodulation Pilot Signal sequence $r^{\mathrm{AUANCH}}(\cdot)$ for AUANCH is defined by

$$r^{\mathrm{AUANCH}}\left(m' N_{\mathrm{Pilot}}^{\mathrm{AUANCH}} M_{\mathrm{sc}}^{\mathrm{Pilot}} + mM_{\mathrm{sc}}^{\mathrm{Pilot}} + n\right) = \overline{w}(m) z(m) r_{u,v}^{(\alpha)}(n)$$

where $m = 0,...,N_{\text{Pilot}}^{\text{AUANCH}} - 1$, $n = 0,...,M_{\text{sc}}^{\text{Pilot}} - 1$ and $m' = 0,1$.For CQICH, $z(m)$ equals $d(10)$ for $m = 1$. For all other cases, $z(m) = 1$.

3.6.3.4.1.2 Mapping to physical resources

The sequence $r^{\text{AUEDCH}}(\cdot)$ shall be multiplied with the amplitude scaling factor β_{AUEDCH} and mapped in sequence starting with $r^{\text{AUEDCH}}(0)$ to the same set of physical resource blockunits used for the corresponding AUEDCH transmission.

3.6.3.4.2 Advanced Sounding Pilot signal

3.6.3.4.2.1 Advanced Souding Pilot signal sequence

The aAdvanced Sounding Pilot signal sequence $r^{\text{SP}}(n) = r_{u,v}^{(\alpha)}(n)$,where u is the AUANCH sequence-group number and v is the base sequence number. The cyclic shift α of the Advanced Sounding Pilot signal is given as $\alpha = 2\pi \frac{n_{\text{SP}}^{\text{cs}}}{8}$, where $n_{\text{SP}}^{\text{cs}}$ is configured for each MS by higher layers and $n_{\text{ATS}}^{\text{cs}} = 0,1,2,3,4,5,6,7$.

The BS-specific slot configuration period T_{SFC} and the BS-specific slot offset Δ_{SFC} for the transmission of advanced Sounding Pilot signals are determined by the higher layers parameter *SoundingPilot-SlotConfig*. Advanced Sounding Pilot signal slots are the slots satisfying $\lfloor n_{\text{s}} / 2 \rfloor \bmod T_{\text{SFC}} \in \Delta_{\text{SFC}}$. Advanced Sounding Pilot signal is transmitted only in configured UL slots or USS. When *SoundingPilot-SlotConfig is from 0 to 7,* T_{SFC} is 5 slots *while* T_{SFC} is 10 slots for *SoundingPilot-SlotConfig from 8 to 15*. Δ_{SFC} is {1}, {1,2}, {1,3}, {1,4}, {1,2,3}, {1,2,4}, {1,3,4}, {1,2,3,4}, {1,2,6}, {1,3,6}, {1,6,7}, {1,2,6,8}, {1,3,6,9}, {1,4,6,7} for *SoundingPilot-SlotConfig from 0 to 13 respectively.*

3.6.3.4.3 Mapping to physical resources

For all slots other than special slots, the Advanced Sounding Pilot signal shall be transmitted in the last symbol of the slot.

The sequence shall be multiplied with the amplitude scaling factor β_{SRS} in order to conform to the transmit power P_{SRS}, and mapped in sequence starting with $r^{\text{SRS}}(0)$ to resource elements (k,l) according to

$$a_{2k+k_0,l} = \begin{cases} \beta_{\text{SRS}} r^{\text{SRS}}(k) & k = 0,1,...,M_{\text{sc},b}^{\text{SP}} - 1 \\ 0 & \text{otherwise} \end{cases}$$

where k_0 is the frequency-domain starting position of the Advanced Sounding Pilot signal $M_{\mathrm{sc},b}^{\mathrm{SP}}$ is the length of the Advanced Sounding Pilot signal sequence indicated by BS-specific parameter and MS-specific parameter given by higher layers for each uplink bandwidth.

3.6.4 Signal for UL SC

Figure 3.110 describes the coding block diagram for signal data for UL SC.

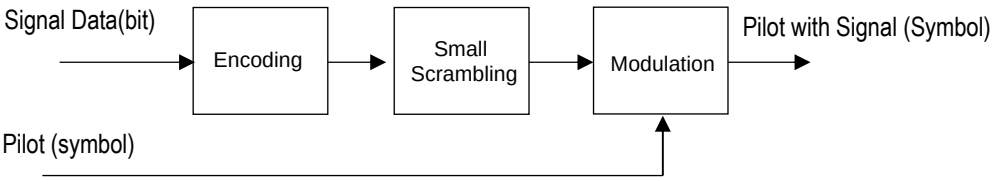

Figure 3.110 Signal Encoding Block Diagram for UL SC

3.6.4.1 Signal Encoding

Figure 3.111 illustrates the signal encoding for SC, which consists of (8,4) Hamming encoding and repetition process. Table 3.47 summarizes the parameters for signal encoding for each symbol rate. In this figure, signal data (4-bit) is first encoded by (8,4) Hamming encoding, and then repeated r1 times. DI (0 – 3 bits) are simply repeated r2 times. Then, output bits from the repetition-1 are followed by the output bits from the repetition-2 to form the encoded signal bits (m-bit). DI indicates the number of CRC units filled with DTX symbols. Refer to Section 3.6.5 for DTX symbols.

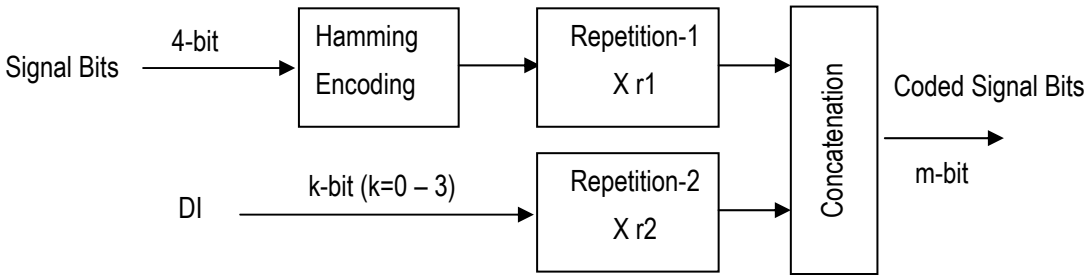

Figure 3.111 Signal Encoding for SC

Table 3.47 Parameters for Signal Encoding

	Type1	Type2	Type3	Type4	Type5
Symbol Rate [Msps]	0.6	1.2	2.4	4.8	9.6
Number of Signal Bits	4	4	4	4	4
Number of DI Bits: k	0	0	1	2	3
Repetition Factor: r1	1	2	3	6	12
Repetition Factor: r2	N/A	N/A	8	16	32
Number of Coded Signal Bits: m	8	16	32	64	128

3.6.4.1.1 (8,4) Hamming Encoding

Refer to Section 3.4.5.1.1.

3.6.4.1.2 Small Scrambling

Refer to Section 3.4.5.1.2.

3.6.4.2 Modulation for Signal

Figure 3.112 illustrates the pilot block S9 modulated by encoded signal bits for CSCH. Encoded signal bits of N/2-bit are multiplexed into the pilot block S9 of N-symbol. When the n-th encoded signal bit c(n) (n=1,2,…,N/2) is 0, the pilot symbol P(n) is sent as it is, while the pilot symbol P(N/2+n) is rotated by π/2 [rad]. When the n-th encoded signal bit c(n) (n=1,2,…,N/2) is 1, the pilot symbol P(N/2+n) is sent as it is, while the pilot symbol P(n) is rotated by π/2 [rad]. This is equivalent to frequency-multiplexing BPSK symbols modulated by encoded signal bits and pilot symbols, in which each BPSK symbol is rotated by the angle of corresponding pilot symbol.

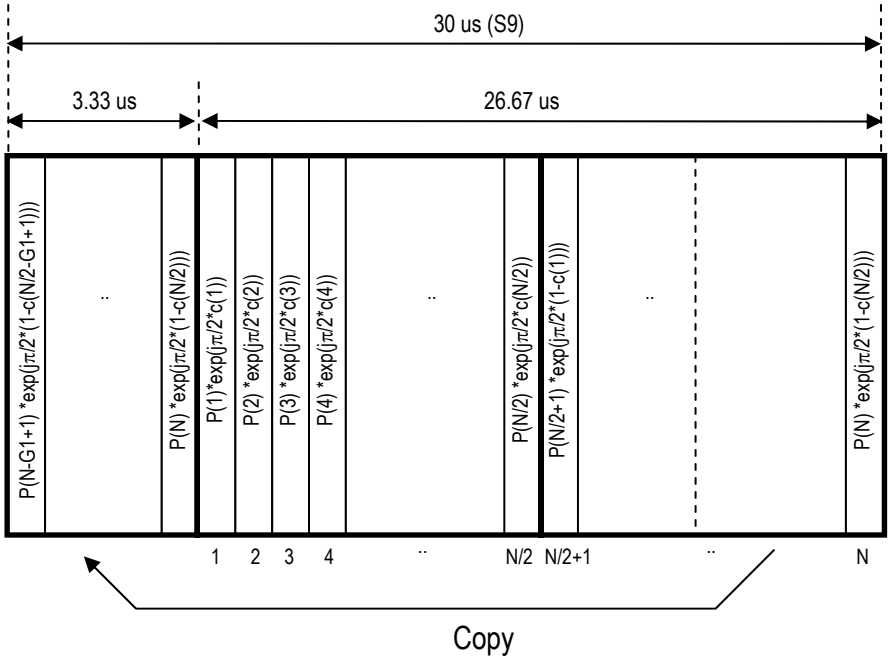

Figure 3.112 Pilot Block with Signaling Bits for CSCH

3.6.5 Null (DTX) for UL SC

Null symbol is defined as 0 + 0j. Null symbol is the same as DTX symbol. DTX symbol is used in EXCH and CSCH when the SC burst can accommodate more CRC units than the number of CRC units to be transmitted. All data blocks after mapping all CRC units in the SC burst are DTX symbols. When all data symbols in S8 or S16 are DTX symbols, symbols in the GI of S8 or S16 should be DTX symbols with or without virtual GI extension.
Figure 3.113 shows the example of DTX symbol mapping for EXCH in case of 2.4 Msps, in which one CRC unit is to be transmitted.

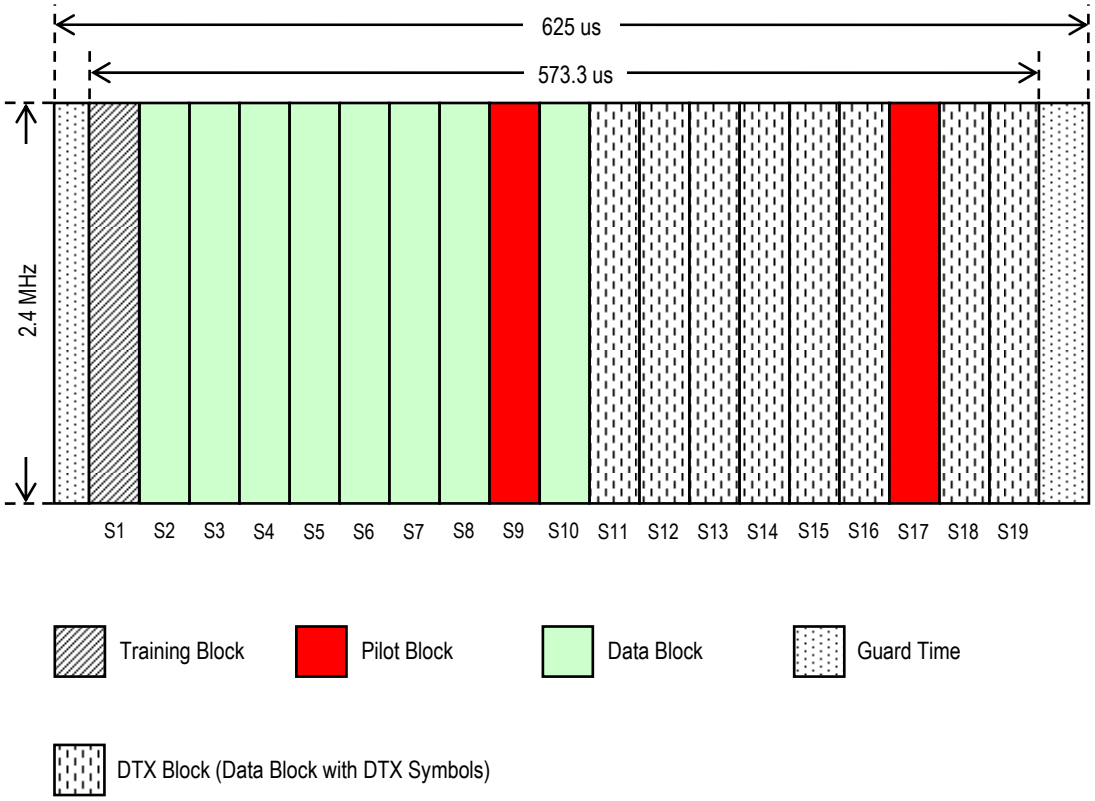

Figure 3.113 DTX Symbol Mapping Method for EXCH (In case of 2.4 Msps)

3.6.6 TCCH for UL SC

3.6.6.1.1 TCCH Format

TCCH is used mainly for transmission timing adjustment and for initial access to BS. Figure 3.114 shows the TCCH format. TCCH is composed of 3 consecutive SC blocks. TCCH symbols T(1) – T(16) are decided by the TCCH core-sequence number as explained in Section 3.6.6.2.

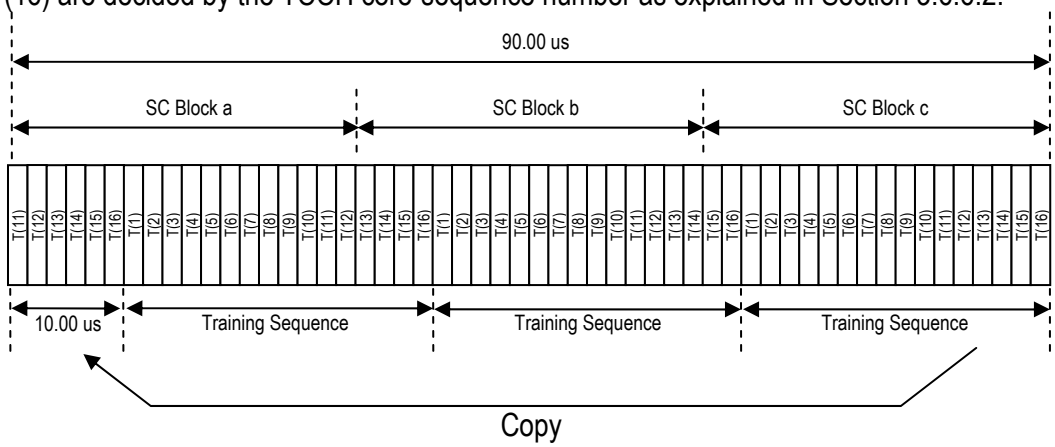

Figure 3.114 TCCH Block Structure

3.6.6.2 TCCH Sequence and TCCH Sub-slot

TCCH core-sequence number is described in Appendix D.2. TCCH sub-slots number is described in Section 3.6.7.1.2. The application patterns of TCCH core-sequence number and TCCH sub-slot number are described in Chapter 5.

3.6.6.3 ATCCH for UL SC

3.6.6.3.1 Time and frequency structure

The physical layer random access sequence, illustrated in Figure 3.115, consists of a guard interval of length T_{GI} and a sequence part of length T_{SEQ}. The parameter values depend on the frame structure and the random access configuration. Higher layers control the access sequence format. T_{GI} is $\frac{33}{320}$ ms and T_{SEQ} is 0.8 ms for access sequence format 0. T_{GI} is $\frac{219}{320}$ ms and T_{SEQ} is 0.8 ms for access sequence format 1. T_{GI} is $\frac{39}{64}$ ms and T_{SEQ} is 1.6 ms for access sequence format 2. T_{GI} is $\frac{219}{320}$ ms and T_{SEQ} is 1.6 ms for access sequence format 3. T_{GI} is $\frac{7}{480}$ ms and T_{SEQ} is $\frac{2}{15}$ ms for access sequence format 4.

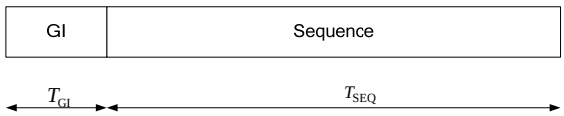

Figure 3.115 Random access sequence format

The transmission of a random access sequence, if triggered by the MAC layer, is restricted to certain time and frequency resources. These resources are enumerated in increasing order of the slot number within the radio frame and the physical resource units in the frequency domain such that index 0 correspond to the lowest numbered physical resource unit and slot within the radio frame. ATCCH resources within the radio frame are indicated by a ATCCH Resource Index.

There might be multiple random access resources in an UL slot (or USS for access sequence format 4) depending on the UL/DL configuration. The 6 bits parameter ATCCH-ConfigurationIndex given by higher layers indicates a triplet <access sequence format,

Density Per 10 ms D_{ATCCH}, Version r_{ATCCH}>, where access sequence format, D_{ATCCH} and r_{ATCCH} are indicated by ATCCH-ConfigurationIndex value from 0 to 57 with mapping in sequence to {0,0,0,0,0,0,0,0,0,0,0,0,0,0,0,0,0,0,0,0,1,1,1,1,1,1,1,1,1,1,2,2,2,2,2,2,2,2,2,2,3,3,3,3,3,3,3,3,3,4,4,4, 4,4,4,4,4,4,4,4}, {0.5,0.5,0.5,1,1,1,2,2,2,3,3,3,4,4,4,5,5,5,6,6,0.5,0.5,0.5,1,1,2,3,4,5,6,0.5,0.5,0.5, 1,1,2,3,4,5,6,0.5,0.5,0.5,1,1,2,3,4,0.5,0.5,0.5,1,1,2,3,4,5,6} and {0,1,2,0,1,2,0,1,2,0,1,2,0,1,2, 0,1,2,0,1,0,1,2,0,1,0,0,0,0,0,0,1,2,0,1,0,0,0,0,0,0,1,2,0,1,0,0,0, 0,1,2,0,1,0,0,0,0,0} respectively. The ATCCH opportunities are allocated in time first and then in frequency if and only if time multiplexing is not sufficient to hold all opportunities of a configuration without overlap in time. Then the location of random access resource for a certain ATCCH opportunity can be indicated by time location triplet $\left\langle t^0_{ATCCH}, t^1_{ATCCH}, t^2_{ATCCH} \right\rangle$ and frequency location k_{ATCCH}.

For time location, $t^0_{ATCCH} = 0,1,2$ indicates the random access resource is located in every, even or odd radio frame, respectively; $t^1_{ATCCH} = 0,1$ indicates the random access resource is located in the first half frame or in the second half frame of a radio frame, respectively; and t^2_{ATCCH} counting from 0 at the first UL slot (for access sequence format 0 to 3) or at USS (for access sequence format 4) in a half frame, indicates which UL slot or USS the random access resource starts from in a half frame. The time location triplet $\left\langle t^0_{ATCCH}, t^1_{ATCCH}, t^2_{ATCCH} \right\rangle$ is given by

$$
\begin{aligned}
t^0_{ATCCH} &= \left[\left(2D_{ATCCH}\right)\bmod 2\right]\left[1+\left(r_{ATCCH}\lceil D_{ATCCH}\rceil + d\right)\bmod 2\right] \\
t^1_{ATCCH} &= m^{ind}_{ATCCH} \bmod 2 \\
t^2_{ATCCH} &= N^{UL,HF}_{slot}\left(t^1_{ATCCH}\right) - \left(\left\lfloor \frac{m^{ind}_{ATCCH}}{2} \right\rfloor + 1\right) L_{ATCCH}
\end{aligned}
$$

where d is index of ATCCH opportunities and $0 \le d \le \lceil D_{ATCCH} \rceil - 1$, $N^{UL,HF}_{slot}(i)$ is the number of UL slots (for access sequence format 0 to 3) or USS (for access sequence format 4) in the 1st ($i = 0$) or the 2nd ($i = 1$) half frame, L_{ATCCH} is the number of slots occupied by the access sequence, which equals to $\left\lceil (T_{GI} + T_{SEQ}) \cdot 10^3 \right\rceil$. For access sequence format 0 and $D_{ATCCH} < 4$, m^{ind}_{ATCCH} is defined by $m^{ind}_{ATCCH} = \left\lfloor \frac{r_{ATCCH}\lceil D_{ATCCH}\rceil + d}{1+\left(2D_{ATCCH}\right)\bmod 2} \right\rfloor$, otherwise

$$m_{ATCCH}^{ind} = \left\lfloor \frac{r_{ATCCH}\lceil D_{ATCCH} \rceil + d}{1+(2D_{ATCCH}) \bmod 2} \right\rfloor \bmod \sum_{i=0}^{1} \left\lfloor \frac{N_{slot}^{UL,HF}(i)}{L_{ATCCH}} \right\rfloor .$$

For access sequence format 0 to 3, the start of the random access sequence shall be aligned with the start of the corresponding uplink slot at the MS assuming a timing advance of zero. For access sequence format 4, the access sequence shall start $166.67\mu s$ before the end of the USS at the MS.

For frequency location, k_{ATCCH} indicates the first resource block allocated to a certain ATCCH opportunity. For access sequence format 0-3, k_{ATCCH} is given by

$$k_{ATCCH} = \begin{cases} k'_{ATCCH} + 6\left\lfloor \frac{f_{ATCCH}}{2} \right\rfloor, & \text{if } f_{ATCCH} \bmod 2 = 0 \\ N_{RU}^{UL} - 6 - k'_{ATCCH} - 6\left\lfloor \frac{f_{ATCCH}}{2} \right\rfloor, & \text{otherwise} \end{cases}$$

where k'_{ATCCH} indicates the first resource block available for ATCCH, f_{ATCCH} is the index of ATCCH opportunities in frequency domain and $0 \le f_{ATCCH} \le N_{ATCCH}\left(t_{ATCCH}^{0}, t_{ATCCH}^{1}, t_{ATCCH}^{2}\right) - 1$,

where $N_{ATCCH}\left(t_{ATCCH}^{0}, t_{ATCCH}^{1}, t_{ATCCH}^{2}\right)$ is the number of ATCCH opportunities with identical time location specified by triplet $\left\langle t_{ATCCH}^{0}, t_{ATCCH}^{1}, t_{ATCCH}^{2} \right\rangle$. For access sequence format 4, k_{ATCCH} is given by

$$k_{ATCCH} = \begin{cases} k'_{ATCCH} + 6 f_{ATCCH}, & \text{if } t_{ATCCH}^{1} \bmod 2 = 0 \\ N_{RU}^{UL} - k'_{ATCCH} - 6 - 6 f_{ATCCH}, & \text{otherwise} \end{cases}$$

where n_f is the system frame number.Each random access sequence occupies a bandwidth corresponding to 6 consecutive resource blocks.

3.6.6.3.2 Access sequence generation

The random access sequences are generated from Zadoff-Chu sequences with zero correlation zone, generated from one or several root Zadoff-Chu sequences. The network configures the set of access sequences the MS is allowed to use.

There are 64 access sequences available in each cell. The set of 64 access sequences in a cell is found by including first, in the order of increasing cyclic shift. Additional access sequences, in case 64 Access sequences cannot be generated from a single root Zadoff-Chu sequence, are

obtained from the root sequences with the consecutive logical indexes until all the 64 sequences are found.

The uth root Zadoff-Chu sequence is defined by $x_u(n) = e^{-j\frac{\pi un(n+1)}{N_{\text{ZC}}}}$, $0 \le n \le N_{\text{ZC}} - 1$.The length N_{ZC} of the Zadoff-Chu sequence is 839 for access sequence format 0~3 and is 139 for access sequence format 4.

3.6.6.3.3 Baseband signal generation

The time-continuous random access signal $s(t)$ is defined by

$$s(t) = \beta_{\text{ATCCH}} \sum_{k=0}^{N_{\text{ZC}}-1} \sum_{n=0}^{N_{\text{ZC}}-1} x_{u,v}(n) \cdot e^{-j\frac{2\pi nk}{N_{\text{ZC}}}} \cdot e^{j2\pi\left(k+\varphi+K\left(k_0+\frac{1}{2}\right)\right)\Delta f_{\text{ATCCH}}\left(t-T_{\text{GI}}\right)},$$

where $0 \le t < T_{\text{SEQ}} + T_{\text{GI}}$, β_{ATCCH} is an amplitude scaling factor in order to conform to the transmit power P_{ATCCH}, and $k_0 = n_{\text{PRU}}^{\text{ATCCH}} N_{\text{sc}}^{\text{RU}} - N_{\text{RU}}^{\text{UL}} N_{\text{sc}}^{\text{RU}} / 2$. The location in the frequency domain is controlled by the parameter n_{PRU}^{ATCCH}. The factor $K = \Delta f / \Delta f_{\text{ATCCH}}$ accounts for the difference in subcarrier spacing between the random access sequence and uplink data transmission. The variable Δf_{ATCCH}, the subcarrier spacing for the random access sequence, and the variable φ, a fixed offset determining the frequency-domain location of the random access sequence within the physical resource units. Δf_{ATCCH} is 1250 Hz and φ is 7 for access sequence format 0~3 while Δf_{ATCCH} is 7500 Hz and φ is 2 for access sequence format .

3.6.7 SC Burst Structure for UL SC

SC burst is composed of training block, pilot block, data block, DTX symbol and guard time.

3.6.7.1 CCH for UL SC

3.6.7.1.1 SC Burst Structure for CCCH

Figure 3.116 illustrates the SC burst structure for CCCH. Symbols in GI are not counted in the table. Table 3.48 summarizes the composition of CCCH. The number of CRC units is always 1 in CCCH.

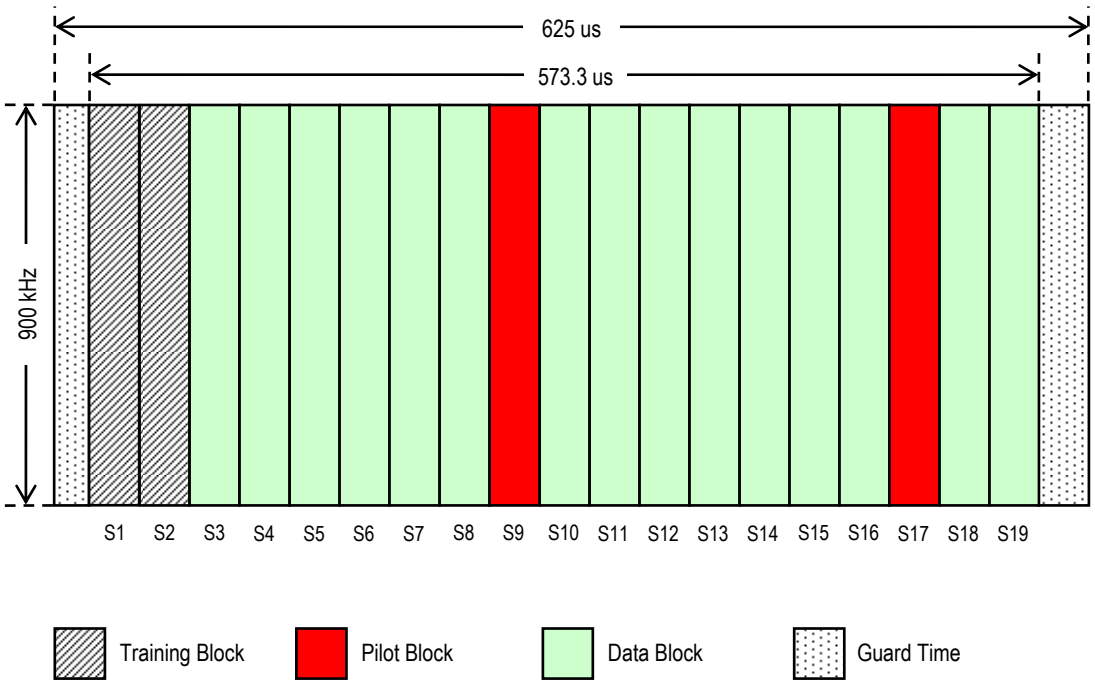

Figure 3.116 SC Burst Structure for CCCH

Table 3.48 Composition of CCCH

	w/o Virtual GI Extension	with Virtual GI Extension
Symbol Name	Number of Symbols	Number of Symbols
Data Symbol	240	230
Distinct Data Symbol	240	206
Training Symbol	32	34
Pilot Symbol	32	40
Total	304	304

3.6.7.1.2 SC Burst Structure for TCCH

Figure 3.117 describes the SC burst format for TCCH for UL SC. Within a slot time, there are four sub-slots, each of which is composed of three SC blocks. They are {S3, S4, S5}, {S7, S8, S9}, {S11, S12, S13} and {S15, S16, S17}. TCCH block defined in Section 3.6.6 is sent in one of the four sub-slots. Table 3.49 summarizes the composition of TCCH. Symbols in GI are not counted in the table.

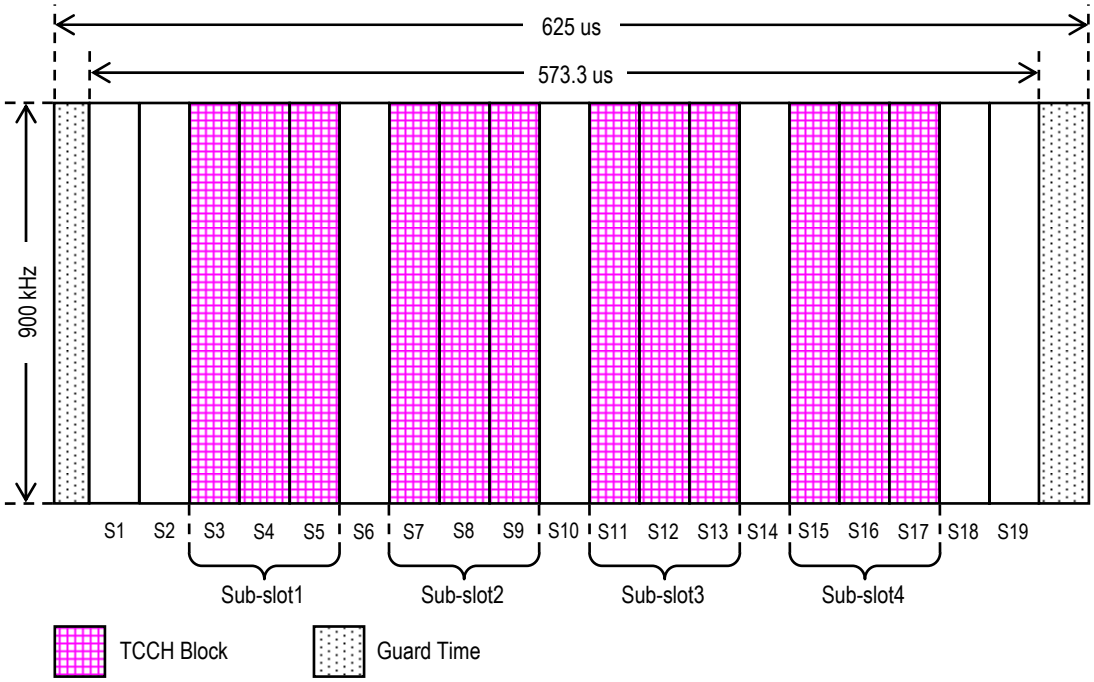

Figure 3.117 SC Burst Structure for TCCH

Table 3.49 Composition of TCCH

Symbol Name	Number of Symbols
TCCH Symbol	48*4 sub-slots

3.6.7.2 ICH for UL SC

3.6.7.2.1 SC Burst Structure for ANCH

Figure 3.118 describes a SC burst format for ANCH.
Table 3.50 summarizes the composition of ANCH. Symbols in GI are not counted in the table.
The number of CRC units is always 1 in ANCH.

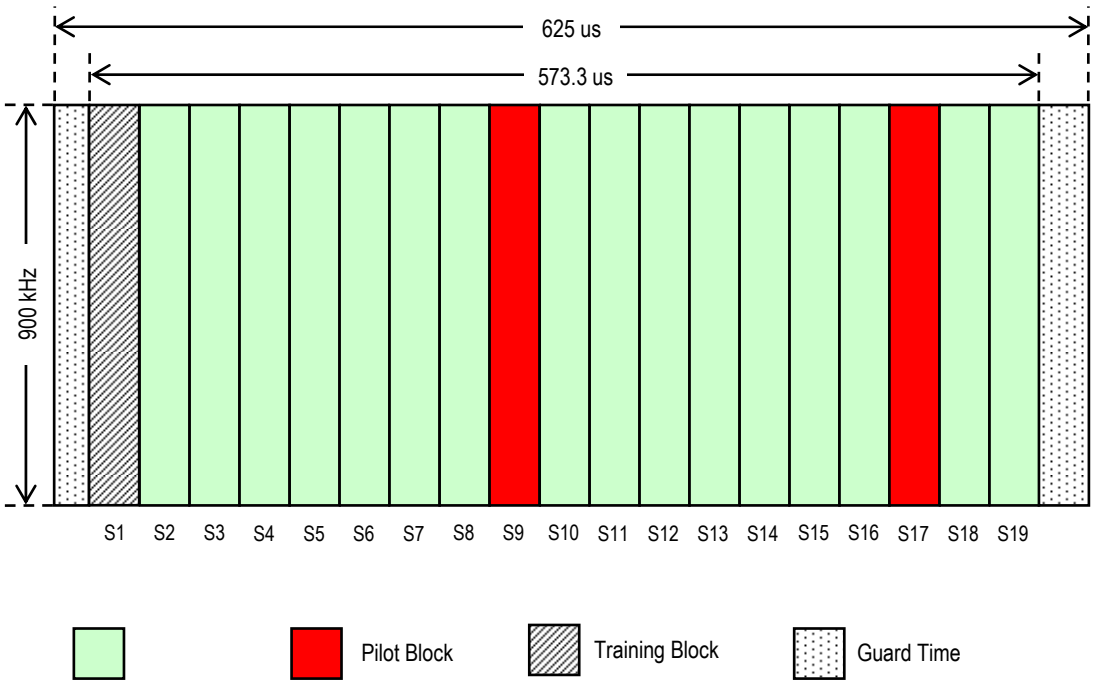

Figure 3.118 SC Burst Structure for ANCH

Table 3.50 Composition of ANCH

	w/o Virtual GI Extension	with Virtual GI Extension
Symbol Name	Number of Symbols	Number of Symbols
Data Symbol	256	246
Distinct Data Symbol	256	220
Training Symbol	16	18
Pilot Symbol	32	40
Total	304	304

3.6.7.2.2 SC Burst Structure for EXCH

Figure 3.119 illustrates a SC burst format for EXCH. Table 3.51 to Table 3.55 summarize the composition of EXCH for different symbol rates.
Table 3.56 summarizes the composition of CRC unit in EXCH. Symbols in GI are not counted in these tables.

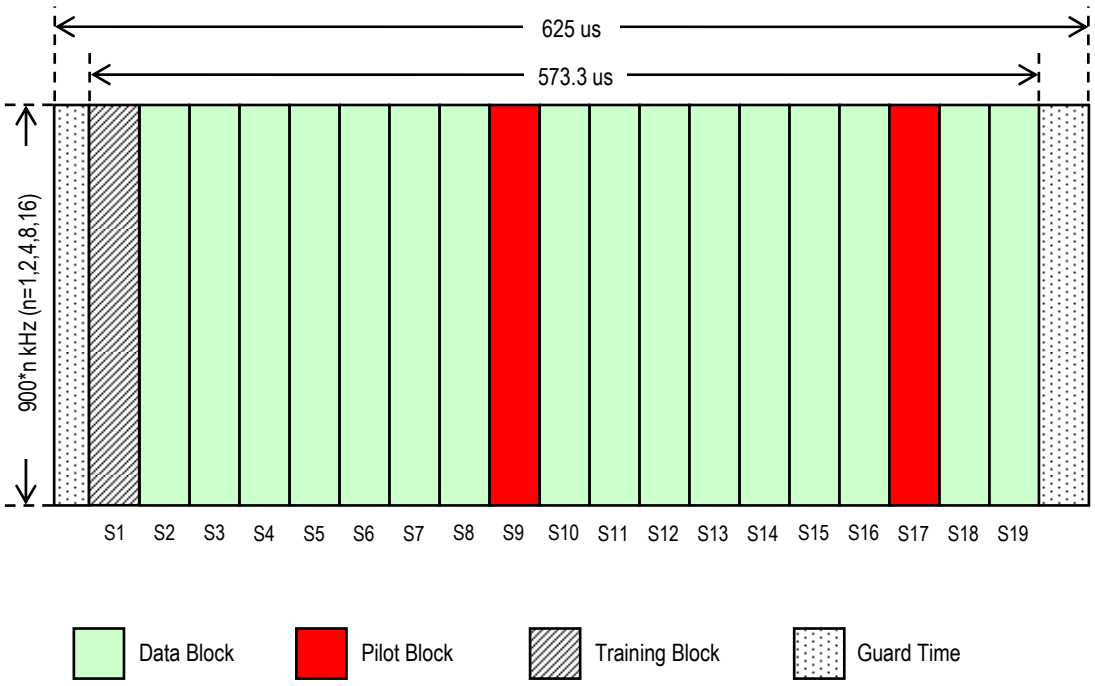

Figure 3.119 SC Burst Structure for EXCH

Table 3.51 Composition of EXCH (0.6 Msps)

	w/o Virtual GI Extension	with Virtual GI Extension
Symbol Name	Number of Symbols	Number of Symbols
Data Symbol	256	246
Distinct Data Symbol	256	220
Training Symbol	16	18
Pilot Symbol	32	40
Total	304	304

Table 3.52 Composition of EXCH (1.2 Msps)

	w/o Virtual GI Extension	with Virtual GI Extension
Symbol Name	Number of Symbols	Number of Symbols
Data Symbol	512	502
Distinct Data Symbol	512	476
Training Symbol	32	34
Pilot Symbol	64	72
Total	608	608

Table 3.53 Composition of EXCH (2.4 Msps)

	w/o Virtual GI Extension	with Virtual GI Extension
Symbol Name	Number of Symbols	Number of Symbols
Data Symbol	1024	1019
Distinct Data Symbol	1024	1006
Training Symbol	64	65
Pilot Symbol	128	132
Total	1216	1216

Table 3.54 Composition of EXCH (4.8 Msps)

	w/o Virtual GI Extension	with Virtual GI Extension
Symbol Name	Number of Symbols	Number of Symbols
Data Symbol	2048	N/A
Distinct Data Symbol	2048	N/A
Training Symbol	128	N/A
Pilot Symbol	256	N/A
Total	2432	N/A

Table 3.55 Composition of EXCH (9.6 Msps)

	w/o Virtual GI Extension	with Virtual GI Extension
Symbol Name	Number of Symbols	Number of Symbols
Data Symbol	4096	N/A
Distinct Data Symbol	4096	N/A
Training Symbol	256	N/A
Pilot Symbol	512	N/A
Total	4864	N/A

Table 3.56 CRC Unit for EXCH

Parameter		Type1	Type2	Type3	Type4	Type5
Symbol Rate [Msps]		0.6	1.2	2.4	4.8	9.6
Number of CRC Units		1	1	2	4	8
Number of Data Symbols per CRC Unit	w/o Virtual GI Extension	256	512	512	512	512
	with Virtual GI Extension	250	506	510	N/A	N/A
Number of Distinct Data Symbols per CRC Unit	w/o Virtual GI Extension	256	512	512	512	512
	with Virtual GI Extension	220	476	503	N/A	N/A

3.6.7.2.3 SC Burst Structure for CSCH

Figure 3.120 describes a SC burst format for CSCH. Table 3.57 to Table 3.61 summarize the composition of CSCH for different symbol rates. Table 3.62 summarizes the composition of CRC unit in CSCH. Symbols in GI are not counted in these tables. Note that EXCH and CSCH have the same compositions except for S9.

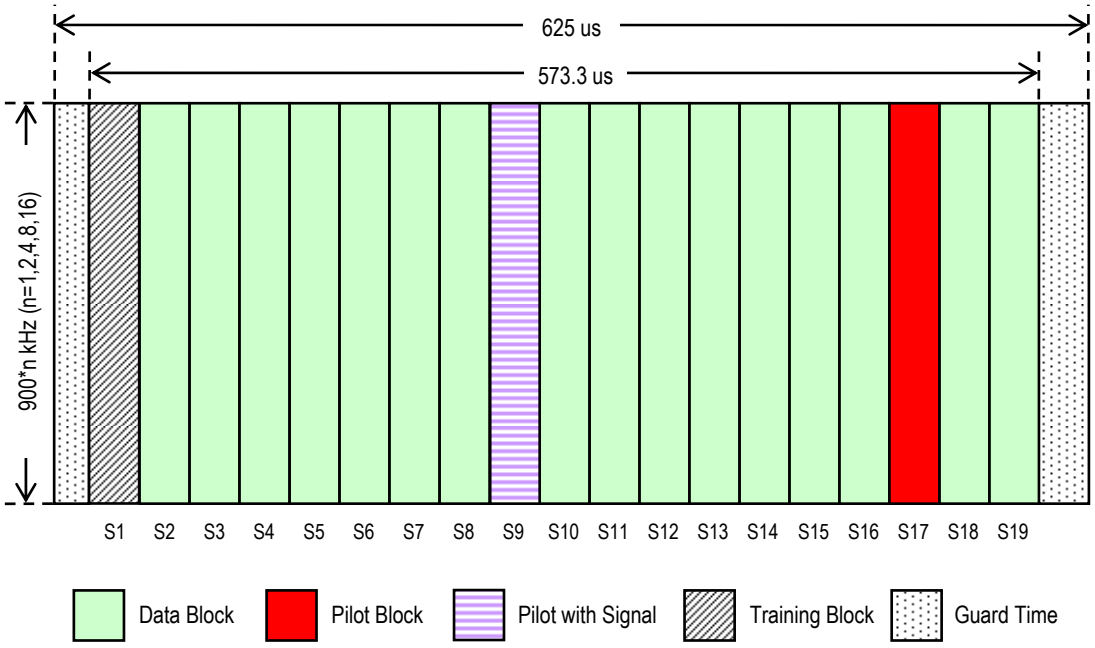

Figure 3.120 SC Burst Structure for CSCH

Table 3.57 Composition of CSCH (0.6 Msps)

	w/o Virtual GI Extension	with virtual GI Extension
Symbol Name	Number of Symbols	Number of Symbols
Data Symbol	256	246
Distinct Data Symbol	256	220
Training Symbol	16	18
Pilot Symbol	32	40
Coded Signal Bit	8	8
Total*	304	304

(*) No encoded signal bit is counted in total.

Table 3.58 Composition of CSCH (1.2 Msps)

	w/o virtual GI Extension	with virtual GI Extension
Symbol Name	Number of Symbols	Number of Symbols
Data Symbol	512	502
Distinct Data Symbol	512	476
Training Symbol	32	34
Pilot Symbol	64	72
Coded Signal Bit	16	16
Total*	608	608

(*) No encoded signal bit is counted in total.

Table 3.59 Composition of CSCH (2.4 Msps)

	w/o Virtual GI Extension	with Virtual GI Extension
Symbol Name	Number of Symbols	Number of Symbols
Data Symbol	1024	1019
Distinct Data Symbol	1024	1006
Training Symbol	64	65
Pilot Symbol	128	132
Coded Signal Bit	32	32
Total*	1216	1216

(*) No encoded signal bit is counted in total.

Table 3.60 Composition of CSCH (4.8 Msps)

	w/o Virtual GI Extension	with Virtual GI Extension
Symbol Name	Number of Symbols	Number of Symbols
Data Symbol	2048	N/A
Distinct Data Symbol	2048	N/A
Training Symbol	128	N/A
Pilot Symbol	256	N/A
Coded Signal Bit	64	N/A
Total*	2432	N/A

(*) No encoded signal bit is counted in total.

Table 3.61 Composition of CSCH (9.6 Msps)

	w/o Virtual GI Extension	with Virtual GI Extension
Symbol Name	Number of Symbols	Number of Symbols
Data Symbol	4096	N/A
Distinct Data Symbol	4096	N/A
Training Symbol	256	N/A
Pilot Symbol	512	N/A
Coded Signal Bit	256	N/A
Total*	4864	N/A

(*) No encoded signal bit is counted in total.

Table 3.62 CRC Unit for CSCH

Parameter		Type1	Type2	Type3	Type4	Type5
Symbol Rate [Msps]		0.6	1.2	2.4	4.8	9.6
Number of CRC Units		1	1	2	4	8
Number of Data Symbols per CRC Unit	w/o Virtual GI Extension	256	512	512	512	512
	with Virtual GI Extension	250	506	510	N/A	N/A
Number of Distinct Data Symbols per CRC Unit	w/o Virtual GI Extension	256	512	512	512	512
	with Virtual GI Extension	220	476	503	N/A	N/A

3.6.7.3 CRC Unit for UL SC

Table 3.63 summarizes the CRC unit size for each symbol rate and channel format. In this table, CRC unit size means the number of bits in one CRC unit. Hence, the actual number of input bits to the CRC attachment (CRC unit) is 22-bit less than these numbers. Refer to the definition of CRC unit in Section 3.6.1.

Table 3.63 CRC Unit Size for UL SC

Modulation	Total Coding Rate	Efficiency	Channel (*)	Symbol Rate [Msps]				
				0.6	1.2	2.4	4.8	9.6
π/2-BPSK	1 / 2	0.5	CC	120	N/A	N/A	N/A	N/A
	1 / 2	0.5	A,E,CS	128	256	256	256	256
	2 / 3	0.67	E,CS	170	N/A	N/A	N/A	N/A
π/4-QPSK	1 / 2	1		256	512	512	512	512
	3 / 4	1.5		384	768	768	768	768
8PSK	2 / 3	2		512	1024	1024	1024	1024
16QAM	1 /2	2		512	1024	1024	1024	1024
	3 / 4	3		768	1536	1536	1536	1536
64QAM	4 / 6	4		1024	2048	2048	2048	2048
	5 / 6	5		1280	2560	2560	2560	2560
256QAM	6 / 8	6		1536	3072	3072	3072	3072
	7 / 8	7		1792	3584	3584	3584	3584

(*) CC: CCCH, A: ANCH, E: EXCH, CS: CSCH

3.6.7.4 Transmission Timing of SC Burst for UL SC

Transmission timing is controlled by the BS in ANCH as described in Chapter 4. Since the symbol rate of EXCH can be different from that of ANCH, relative transmission timing of SC burst should be changed according to the symbol rate and virtual GI extension size in order to minimize the inter-carrier interference at BS. Relative transmission timing of the target SC burst (EXCH) is calculated from the reference SC burst (ANCH) using the following equation.

$\Delta t_s = 0.5(g1-vg1-1)/r1- 0.5(g2-vg2-1)/r2.$

r1: Symbol rate of the reference SC burst
g1: GI size of the reference SC burst
vg1: Virtual GI size of the reference SC burst
r2: Symbol rate of the target SC burst
g2: GI size of the target SC burst

vg2: Virtual GI size of the target SC burst

Table 3.64 to Table 3.65 show the relative transmission timing for different symbol rates with or without virtual GI extension respectively.

Table 3.64 Relative Transmission Timing of SC Burst

	Type1	Type2	Type3	Type4	Type5
Symbol Rate [Msps]	0.6	1.2	2.4	4.8	9.6
GI Size [symbol]	2	4	8	16	32
Virtual GI Size [symbol]	0	0	0	0	0
Relative Timing [us]	0	-0.417	-0.625	-0.729	-0.781

Table 3.65 Relative Transmission Timing of SC Burst with Virtual GI Extension

	Type1	Type2	Type3	Type4	Type5
Symbol Rate [Msps]	0.6	1.2	2.4	4.8	9.6
GI size [symbol]	2	4	8	16	32
Virtual GI Size [symbol]	2	2	1	0	0
Relative Timing [us]	0	-1.25	-2.083	-2.396	-2.448

3.6.7.5 Optional SC Burst Structure for UL SC

Refer to 2.5. The quantity $N_{\mathrm{RU}}^{\mathrm{UL}}$ depends on the uplink transmission bandwidth configured in the cell and shall fulfil $N_{\mathrm{RU}}^{\mathrm{min,UL}} \le N_{\mathrm{RU}}^{\mathrm{UL}} \le N_{\mathrm{RU}}^{\mathrm{max,UL}}$, where $N_{\mathrm{RU}}^{\mathrm{min,UL}} = 6$ and $N_{\mathrm{RU}}^{\mathrm{max,UL}} = 110$ are the smallest and largest uplink bandwidths, respectively. The number of SC-FDMA symbols in a slot depends on the Guard Interval length configured by the higher layer parameter.

Chapter 4 Individual Channel Specification

4.1 Overview

This chapter describes the service and operation requirements applied to radio transmission facilities for XGP.
The concept of protocol structure is described in Chapter 2 based on the ALL-IP network. The detail of the PHY layer for physical specification including several definitions of physical frame requirements is described in Chapter 3.

4.1.1 Usage of PRU

XGP carries out control on information transmission necessary for call connection by making use of common channel (CCH). XGP also carries out control on information to individual user and on user traffic transmission by making use of individual channel (ICH).

Figure 4.1 shows the access units of the entire channel bandwidth. Time duration of the TDMA frame is 2.5, 5 or 10 ms and each TDMA frame is divided into UL and DL slots on the time axis. Their ratio is valiable and the equation for a frame structure is shown in section 2.4.2.2. Effective channel bandwidth is divided into 900 kHz each to obtain FDMA slots. One unit, covering area of 625 us x 900 kHz, is defined as one physical resource unit (PRU).

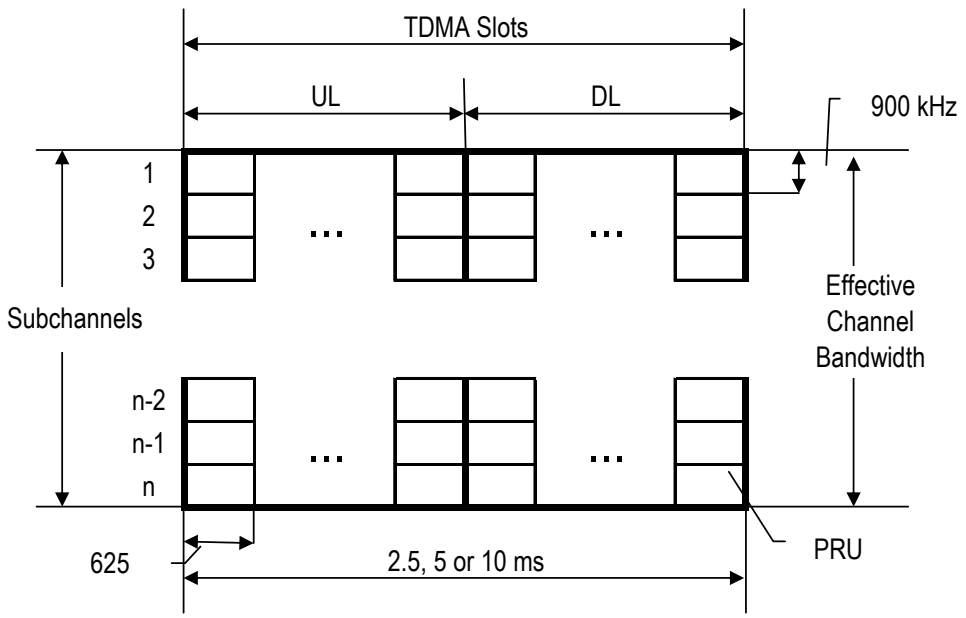

Figure 4.1 OFDMA/SC-FDMA/TDMA-TDD

Generally, a certain fixed subchannel will be fit into common channel (CCH). Other FDMA slots will be used as individual channel (ICH).

4.1.1.1 Common Channel (CCH)

Generally, a certain fixed subchannel is used for the CCH. One PRU pair out of eight PRUs is used for a BS as CCH. One is in DL and the other is in UL.

4.1.1.2 Individual Channel (ICH)

ICH consists of an anchor channel (ANCH) which is used as a dedicated control channel, extra channels (EXCH) which are mainly used for the user data transmission, and circuit switching channels (CSCH) which are used for the user data and control transmission.
Figure 4.2 shows an example to use ICH. The figure shows that four users: User 1, User 2, User 3, and User 4 are connected to a BS. A1 is ANCH for User 1. E1 is EXCH for User 1. A2 is ANCH for User 2. E2 is EXCH for User 2. C3 is CSCH for User 3. C4 is CSCH for User 4. The figure shows that User 1 is using four EXCHs, User 2 is using two EXCHs, and User 3 and User 4 are using one CSCH each.

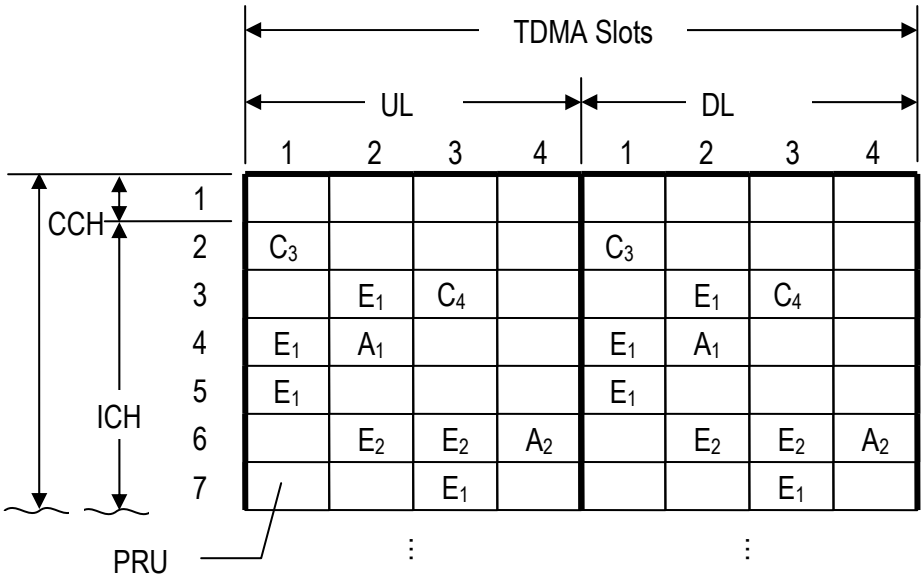

Figure 4.2 Example of ICH Usage

Every active user is allocated with one PRU as ANCH or CSCH, and it may also be allocated with either one or more PRU(s) as EXCH. The ANCH and CSCH for every active user is allocated with the same PRU on every TDMA frame. However, the EXCH PRU allocation will be changed dynamically in every TDMA frame.
When UL and DL subframe ratio is equal, PRUs of ICH are allocated symmetrically. Symmetrical PRU stands for a PRU of same TDMA slot, same PRU on both UL and DL. As for ANCH, CSCH and EXCH, the allocation control is performed in each PRU. In other case, PRUs of ICH are allocated most asymmetrically in same frame because the number of assigned PRU is difference between UL and DL.

4.1.1.2.1 PRU Numbering

Figure 4.3 shows the PRU numbering rule. "N_{SLS}" is the number of slot per 1 subframe.
All the given system bands are numbered and are defined as PRU number. MS is given a part of effective channel bandwidth, and the PRU number in the given band is called logical PRU number. First PRU means the PRU of the earliest timing and lowest frequency. PRU number is counted in the direction of a time-axis by order.

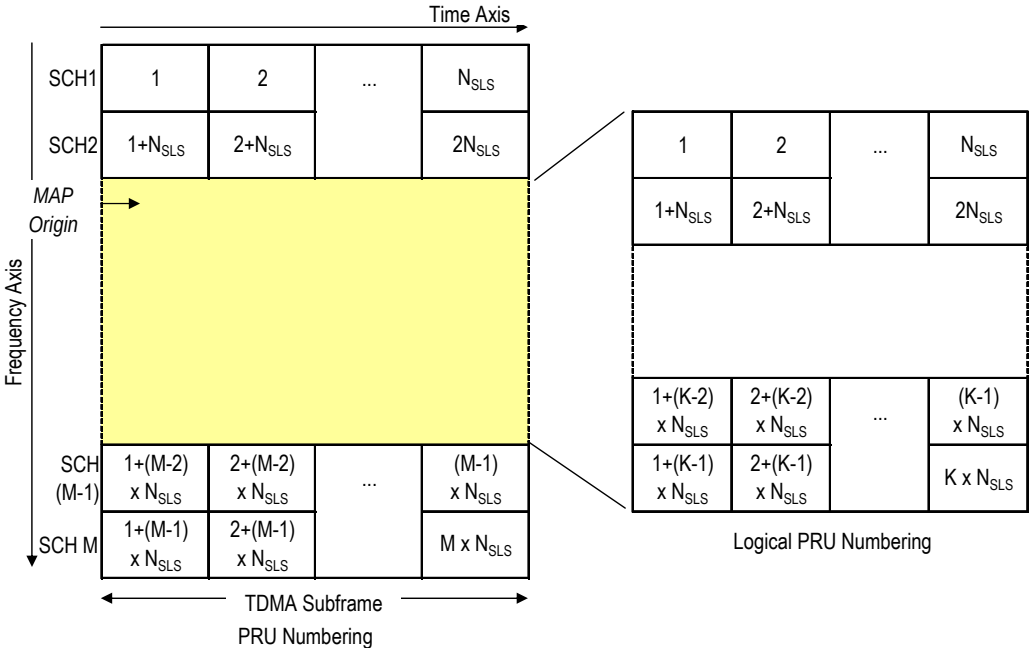

Figure 4.3 Rule of PRU Numbering

4.1.1.2.2 PRU Numbering for Asymmetric frame

When TDMA frame structure is asymmetry, MAP needs to indicate larger number of slots either DL or UL slots. But Logical PRU number is difference between UL and DL. The lower slot's link, DL or UL, should interpret same Logical PRU number itself as the othrer link.
Figure 4.4 shows PRU Numbering in case of asymmetric frame. In this case, the ratio of UL to DL is 1 to 3. PRU numbering and Logical PRU numbering should be interpreted that their numbering is same as DL. But the number of UL slot is only 2 not 6, Both valid numbering for UL are only 2 slots from leading UL.

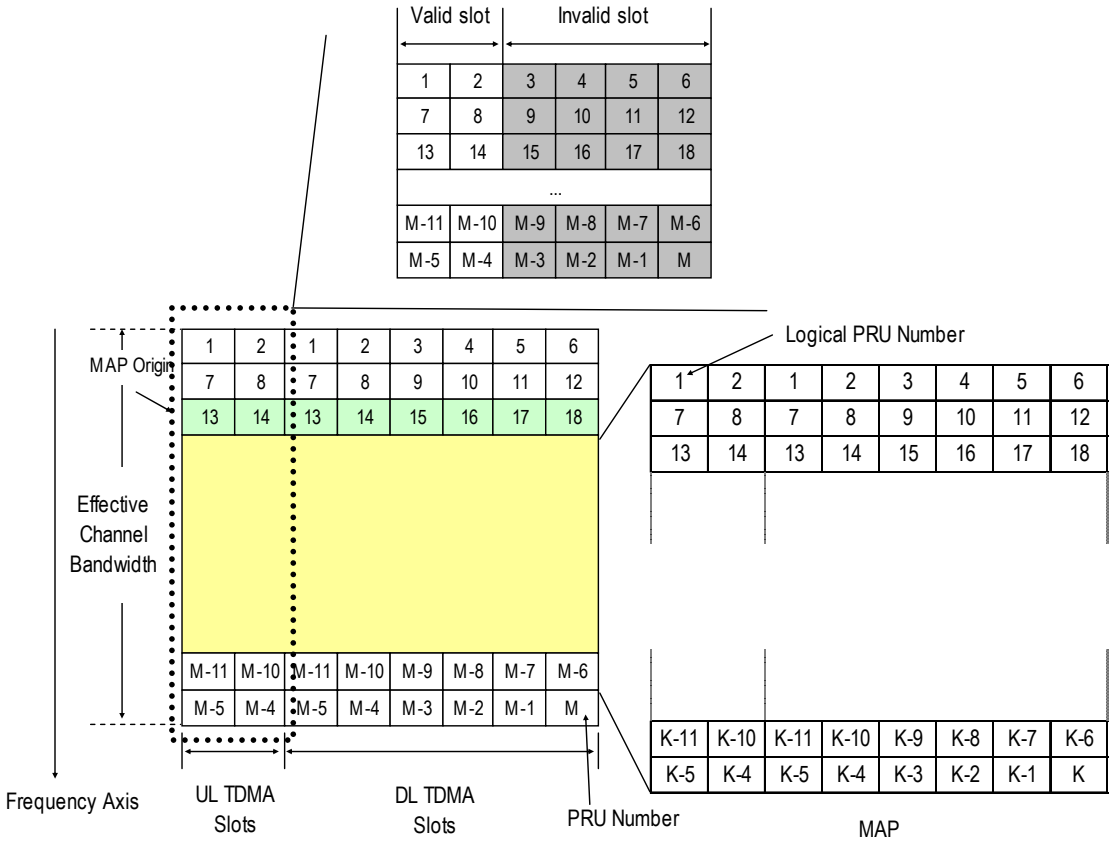

Figure 4.4 PRU Numbering in case of asymmetric frame

4.1.2 QoS Class (Access Mode)

XGP provides multiple QoS class for user traffic transmission.

4.1.2.1 Fast Access Channel Based on Map (FM-Mode)

Four services of QoS class except PLC (Private Line Class) service are provided using a communication control method called FM-Mode. In FM-Mode, BS assigns an ANCH as control channel to MS. BS also assigns EXCH dynamically as traffic channel for data communication. BS assigns EXCH using information elements in ANCH which changes according to the traffic, radio conditions etc. In FM-Mode, control information is transmitted by stealing data channel or control channel as required.
MIMO is expected to use only FM mode.

4.1.2.2 High Quality Channel Based on Carrier Sensing (QS-Mode)

PLC service of QoS class is provided using a communication control method called QS-Mode.
QS-Mode is achieved by making use of a channel called CSCH. BS makes sure that the frequency band of CSCH resembles circuit switching connection. In addition, CSCH is a high quality PRU as the result of the carrier sensing on UL and DL are both positive on assigning PRU.
In QS-Mode, BS transmits control information instead of data to MS as required. BS uses control channel at CSCH transmission of QS-Mode, which accompanies respective data PRU at all times.

4.1.3 XGP Protocol Outline

4.1.3.1 Frame Structure

The frame of each layer consists of a header and one data unit or more. Table 4.1 shows the compositions of the PHY and MAC layer frame.

Table 4.1 Name of Frame Composition

Composition	PHY Layer	MAC Layer
Frame	PHY Frame	MAC Frame
Header	PHY Header	MAC Header
Data Unit	PHY Data Unit	MAC Data Unit

Figure 4.5 shows the composition of the PHY and MAC layer frames. In each frame, a header is put at top of the frame, and is followed by one or more data units. Figure 4.5 shows the order of bits and octets. Transmission and reception are carried out from the upper bit. First transmission and reception begin from the Octet 1.

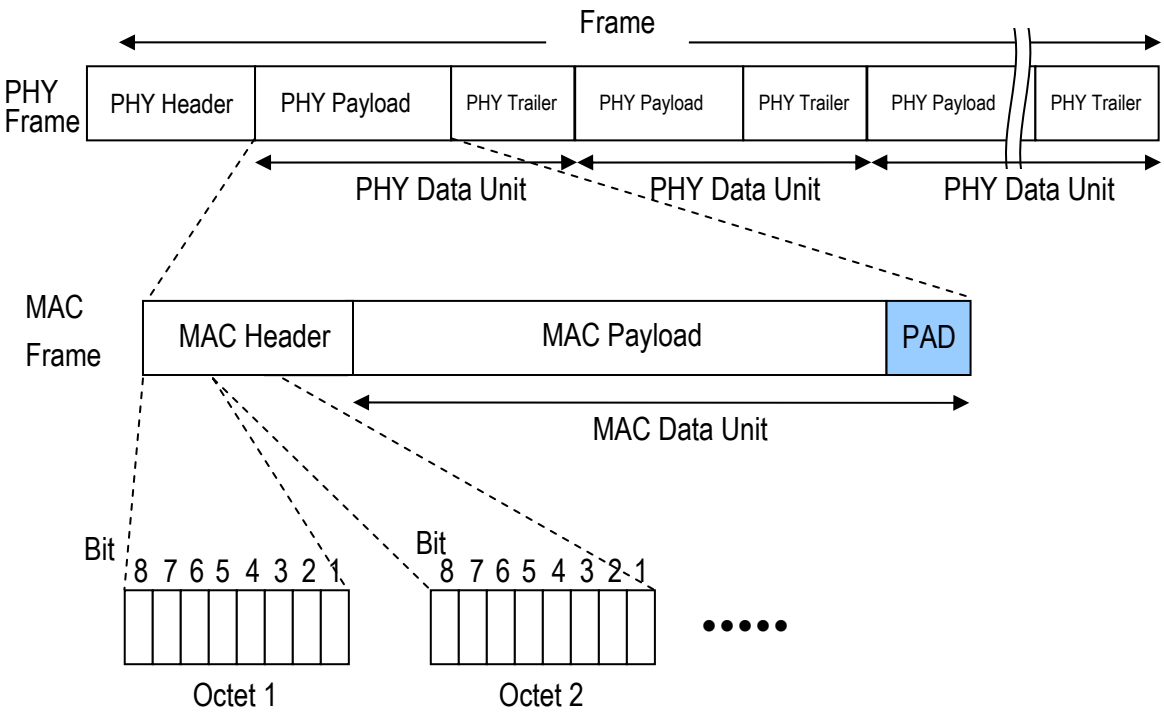

Figure 4.5 General Frame Structure

4.1.3.2 Protocol Structure

The protocol structure is shown in Figure 4.6. Basically, protocol layer between MS and BS consists of a PHY and MAC layer. The PHY layer controls physical wireless line between MS and BS.
MAC layer controls link establishment, channel assignment, channel quality maintenance etc.
The upper network layer is based on IP protocols. This document describes the specification of PHY and MAC layer between MS and BS.

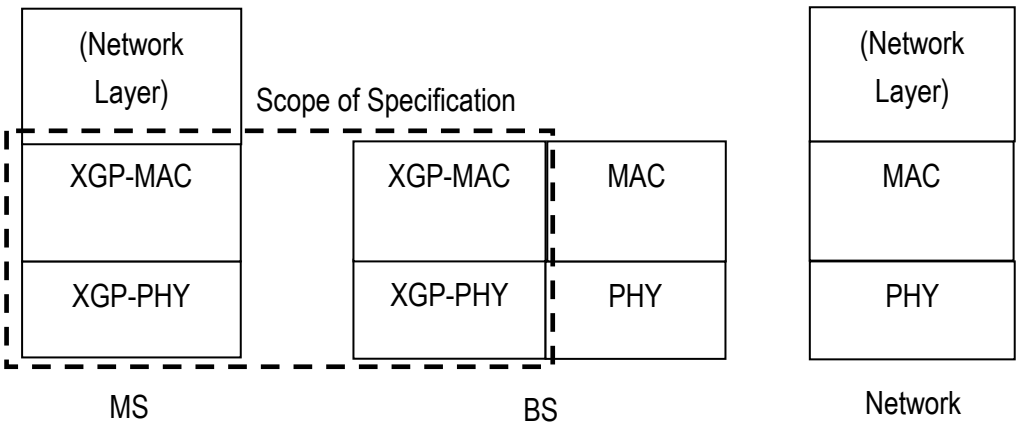

Figure 4.6 Protocol Stack for XGP

Figure 4.7 shows the protocol structure for MAC control layer. The control messages are transferred on the MAC-CNT (MAC control) layer of the XGP-MAC layer. These messages are categorized functionally as mobility Management (MM), and radio frequency transmission management (RT). In this specification, the message format on MAC layer level is defined in Section 4.5.4.
Control messages processed between MS and network are transparently sent though on BS MAC layer.
The packet data is transparently transferred to between MS and network.

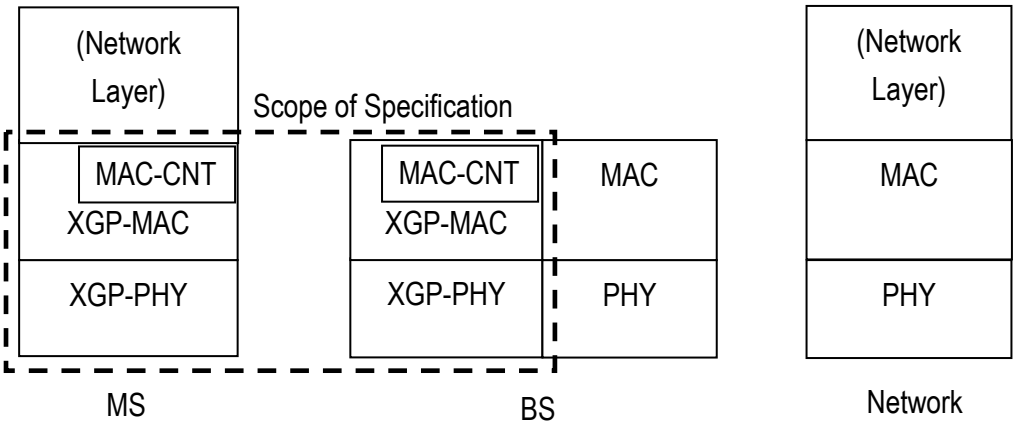

Figure 4.7 Protocol Stack for XGP (MAC Control)

4.2 Functional Channel

The channel classified according to the information it carries is defined as a functional channel.

4.2.1 Channel Composition

Figure 4.8 shows channel hierarchy composition. ICH contains CSCH, ANCH and EXCH. ICH is classified into six functional channels, which are ICCH, ECCH, EDCH, CDCH, TCH and ACCH.

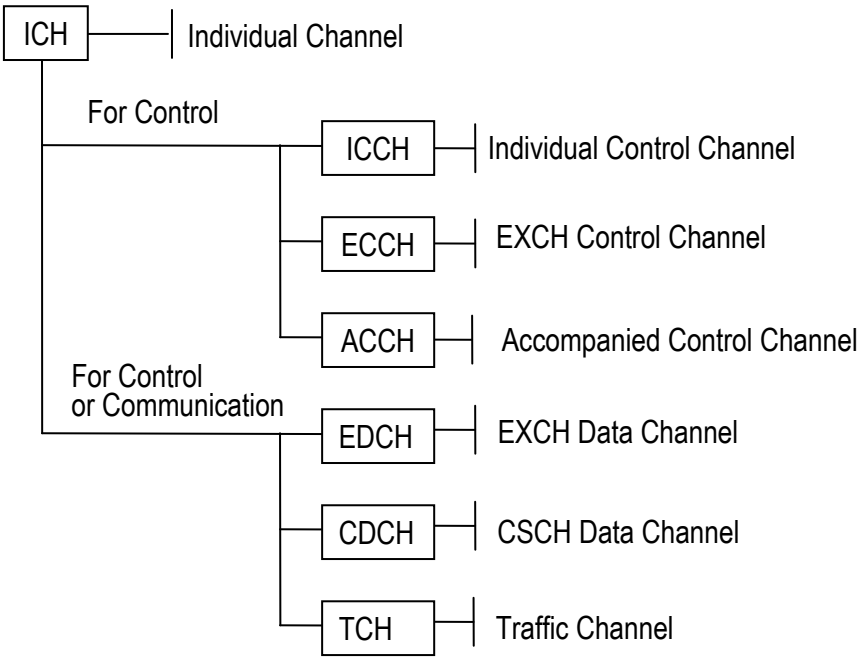

Figure 4.8 Composition of Channels

The correspondence between the functional channels and protocol phase as well as PRU is shown in Figure 4.9.

PRU \ Protocol Phase		Access Establishment Phase	Access Phase
ICH	ANCH	ICCH	ECCH ICCH
	EXCH		EDCH
	CSCH		CDCH, ACCH, TCH

Figure 4.9 PRU, Protocol Phase and Functional Channel Correspondence

4.2.1.1 Individual Control Channel (ICCH)

ICCH is an UL/DL bidirectional control channel which is put into allocated PRU as ANCH. It transmits control information.
ICCH is used with the communication method in both FM-Mode and QS-Mode. And ICCH is used at not only access establishment phase but also access phase.

4.2.1.2 EXCH Control Channel (ECCH)

ECCH is an UL/DL bidirectional control channel which is put into allocated PRU as ANCH. It contains some data that can be applied to control channel allocation for EXCH, MCS, transmission power and timing etc.
ECCH is used in FM-Mode at access phase. ECCH is logically connected with EDCH(s). It operates like the header of the connected format.
The MCS of ECCH is a fixed rate of BPSK-1/2 for OFDM and π/2-BPSK-1/2 for SC.

4.2.1.3 EXCH Data Channel (EDCH)

EDCH is an UL/DL bidirectional channel which is put into allocated PRU as EXCH. It transmits user traffic data.
EDCH is used in access phase.
EDCH can change a modulation method in accordance with the state of radio wave fundamentally, and can execute communication function.
EDCH is used in FM-Mode and it is put into allocated PRU as EXCH. One or more EDCHs are connected to one ECCH logically to form one format. Then, EDCH operates like the data payload of the connected format.

4.2.1.4 CSCH Data Channel (CDCH)

CDCH is an UL/DL bidirectional channel which is put into allocated PRU as CSCH. It transmits user traffic data.
CDCH is used in access phase.
CDCH can change a modulation method in accordance with the state of radio wave fundamentally, and can execute communication function.
It is replaced in order to transmit control information constantly.
CDCH is used for the data communications in QS-Mode. It is put into allocated PRU as CSCH.

4.2.1.5 Traffic Channel (TCH)

TCH is an UL/DL bidirectional channel which is put into allocated PRU as CSCH.
TCH is used in QS-Mode at access phase to transmit bearer constant rate data fundamentally. The MCS of TCH is pre-defined and retransmission control is not performed. TCH is transmitted by the same PRU as ACCH which contains control information.

4.2.1.6 Accompanied Control Channel (ACCH)

ACCH is UL/DL bidirectional control channel which accompanies TCH in allocated PRU as CSCH. It transmits control information.
ACCH is used by access phase in QS-Mode. Like TCH, the MCS of ACCH is the same as the payload and retransmission control is not performed.

4.3 Optional Functional Control Channel

The following functional control channels are optional.
Figure 4.10 shows the downlink and uplink control channel composition.

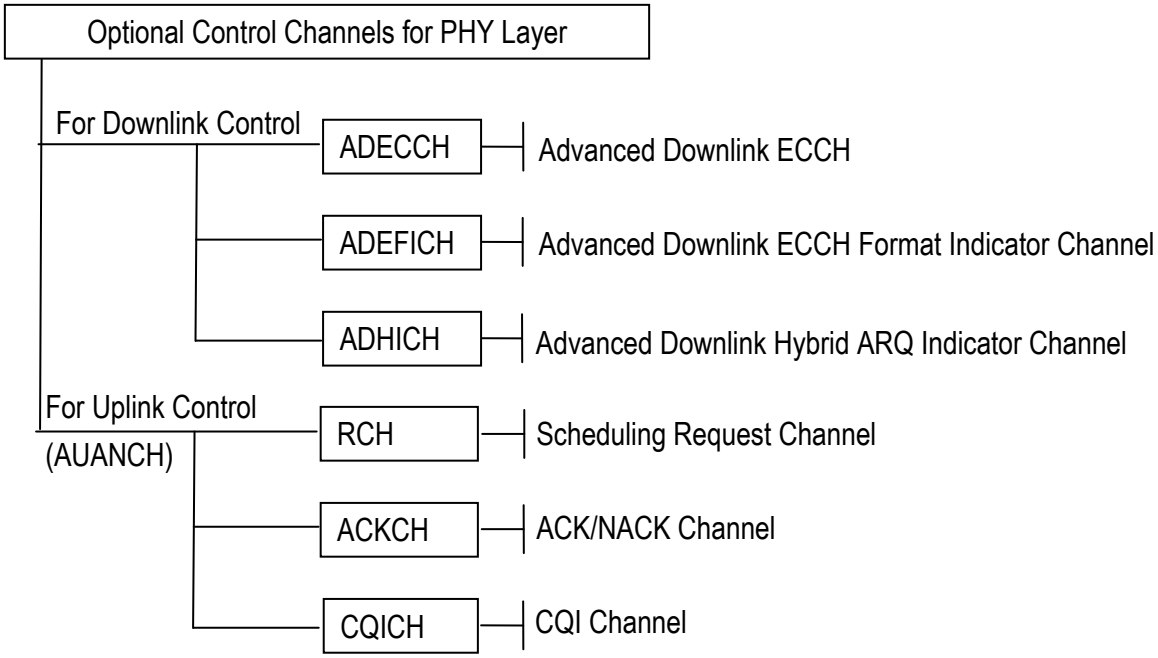

Figure 4.10 Composition of Optional Control Channels

4.3.1 DL Control Channel Composition

4.3.1.1 Advanced Downlink EXCH Control Channel (ADECCH)

4.3.1.1.1 Function of ADECCH

ADECCH is a downlink control channel carrying different Advanced Downlink ECCH Control Information (ADECI) as defined in 4.4.7 and shall support semi-persistent scheduling. Totally four ADECCH formats e.g. format 0/1/2/3 are supported and the number of ADECCH bits corresponding to each format is 72/144/288/576.

4.3.1.1.2 Blind detection for ADECCH

The MS shall monitor two search space (common search space and MS-specific search space) in the ADECCH region and attempt to decode the different ADECI formats carried on ADECCH blindly in some certain candidate locations. The common search space carries on common control information such as system information, paging information, and power control information. The MS-specific search space carries on the uplink and downlink data scheduling information and other control information for a certain MS. The candidate locations for ADECI format detection are decided by the start location and different ADECCH formats. for the MS-specific search space and is a fixed value for the common search space.

The ADECI formats that the MS shall monitor depend on the configured AMT as defined in the ADEDCH part.

4.3.1.2 Advanced Downlink ECCH Format Indicator Channel (ADEFICH)

ADEFICH is a downlink control channel carrying the information about the number of OFDM symbols used for transmission of ADECCH in a slot. The set of OFDM symbols possibly used for ADECCH in a slot is given in Table 4.2.

Table 4.2 Number of OFDM Symbols Used for ADECCH

Slot	Number of OFDM Symbols for ADECCH when $N_{RU}^{DL} > 10$
Slot 1 and 6	1, 2
All Other Cases	1, 2, 3

4.3.1.3 Advanced Downlink Hybrid-ARQ Indicator Channel (ADHICH)

ADHICH is a downlink control channel which carries the hybrid-ARQ ACK/NAK for UL data.

4.3.2 Uplink Control Channel Composition

4.3.2.1 AUANCH/RCH

RCH carries the Scheduling Request (SR) indication. The SR is received from higher layers.

4.3.2.2 AUANCH/ACKCH

ACKCH carries the uplink acknowledgement (ACK) field of corresponding received data in downlink.

4.3.2.3 AUANCH/CQICH

CQICH carries the Channel Quality Indicator (CQI). CQICH also carries the Rank Indication (RI) and Precoding Matrix Indicator (PMI) in case of MIMO.

4.4 PHY Layer Structure and Frame Format

4.4.1 PHY Frame Structure

There are three PHY frame types including ANCH, EXCH, and CSCH.
ICCH, ECCH, EDCH, CDCH, TCH and ACCH are functional channels put into PHY frame.

4.4.1.1 ANCH/ICCH

Figure 4.11 shows ANCH frame structure which contains ICCH for protocol version 1. The ANCH contains PHY header, ICCH, CRC and TAIL bits.

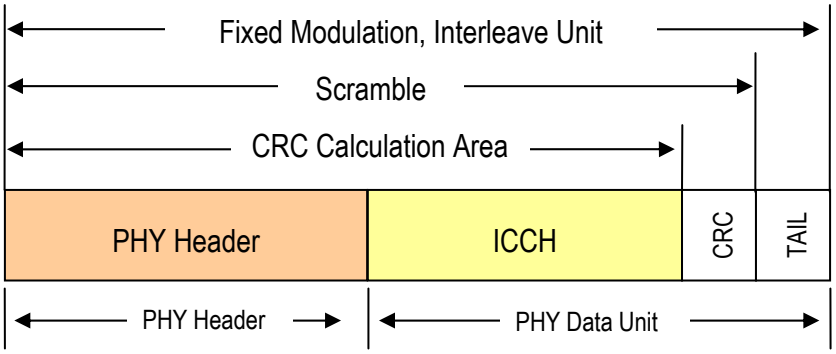

Figure 4.11 PHY Frame Format of ANCH/ICCH for protocol version 1

Figure 4.12 shows ANCH frame structure which contains ICCH for protocol version 2. The ANCH contains PHY header, ICCH, CRC and TAIL bits.
A part of PHY control is used as signal symbol with hamming code. (Refer to Section 3.4.5). The signal symbol is not included in the application range of CRC calculation.

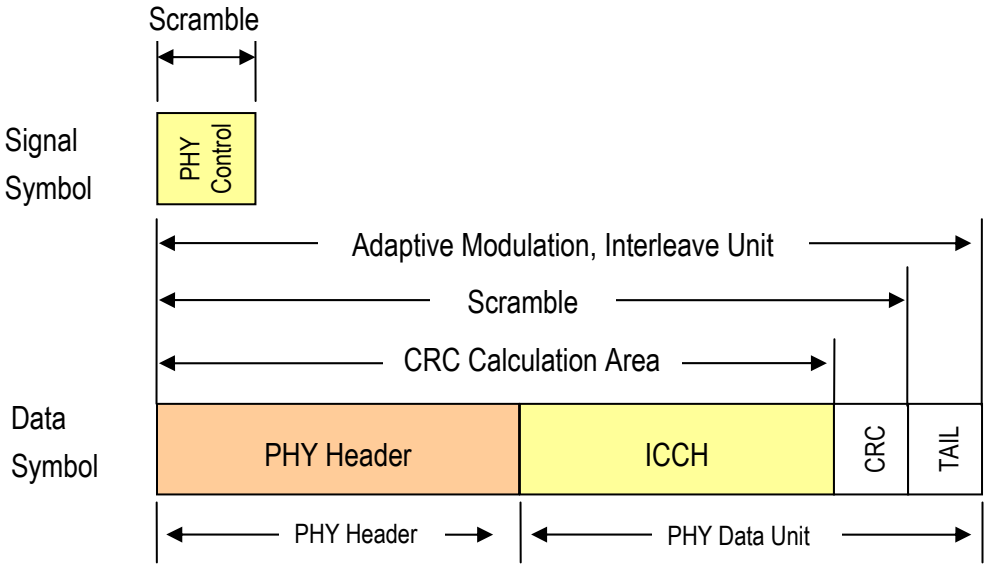

Figure 4.12 PHY Frame Format of ANCH/ICCH for protocol version 2

4.4.1.2 ANCH/ECCH

Figure 4.13 shows the ANCH frame structure which contains ECCH for protocol version 1. The ANCH contains PHY header, ECCH, CRC and TAIL bits.

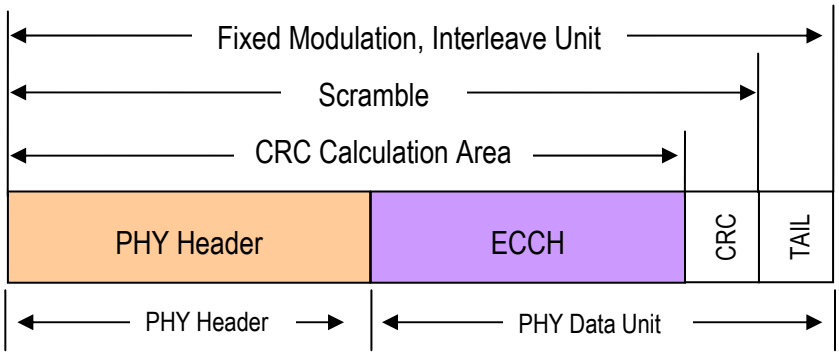

Figure 4.13 PHY Frame Format of ANCH/ECCH for protocol version 1

Figure 4.14 shows the ANCH frame structure which contains ECCH for protocol version 2. The ANCH contains PHY header, ECCH, CRC and TAIL bits.
A part of PHY control is used as signal symbol with hamming code. (Refer to Section 3.4.5). The signal symbol is not included in the application range of CRC calculation.

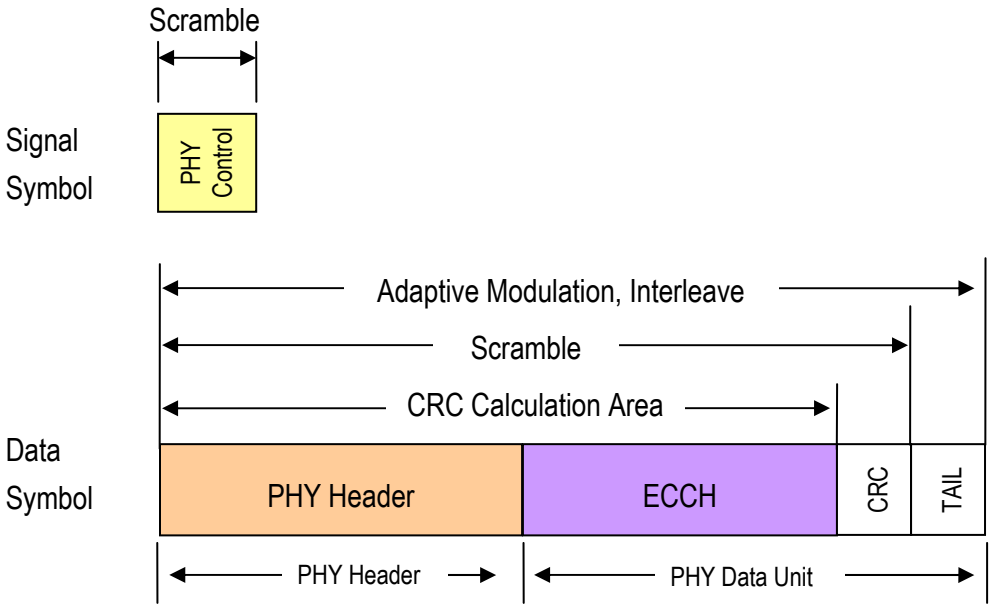

Figure 4.14 PHY Frame Format of ANCH/ECCH for protocol version 2

4.4.1.3 EXCH/EDCH

Figure 4.15 shows EXCH/EDCH frame structure which consists of one or more EXCH(s) except for EMB-MIMO. The EXCH contains EDCH, CRC and TAIL bits.

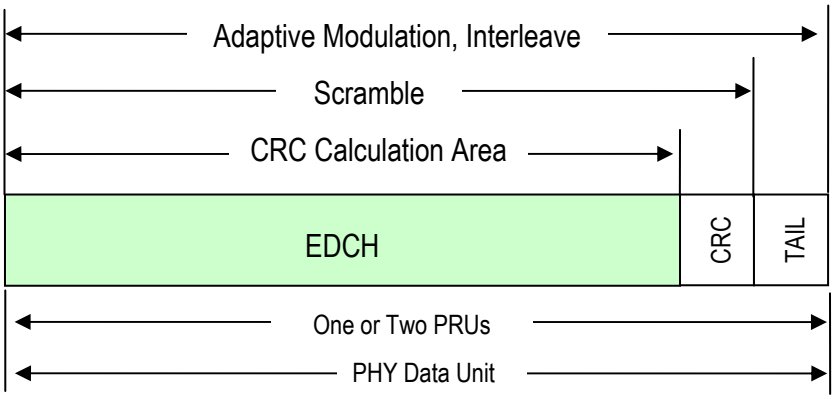

Figure 4.15 PHY Frame Format of EXCH/EDCH except for EMB-MIMO

Figure 4.16 shows EXCH/EDCH frame structure which consists of one or more EXCH(s) for EMB-MIMO. The EXCH contains EDCH, CRC and TAIL bits.
A part of PHY control is used as signal symbol with hamming code. (Refer to Section 3.4.5). The signal symbol is not included in the application range of CRC calculation.

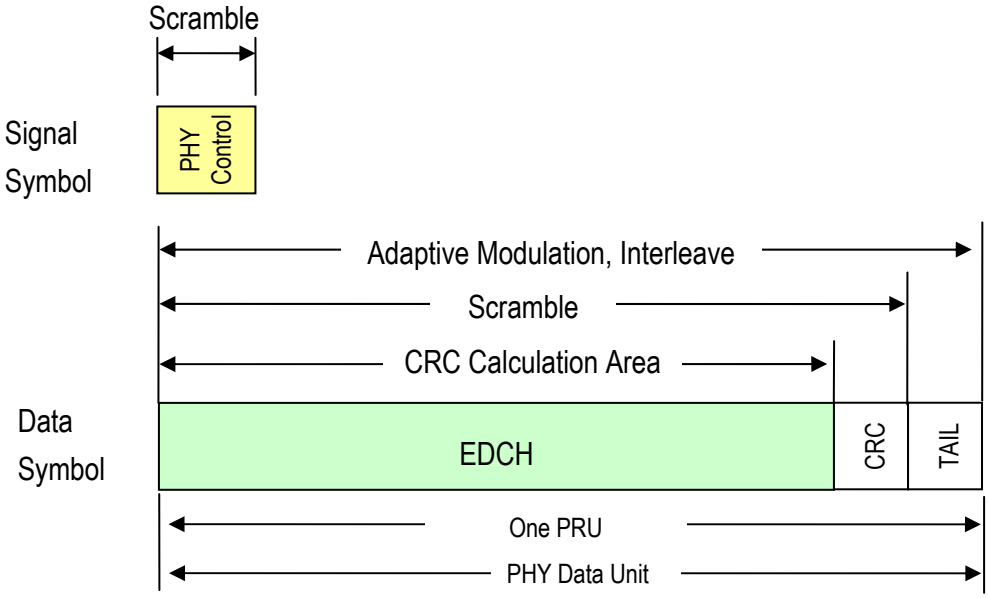

Figure 4.16 PHY Frame Format of EXCH/EDCH for EMB-MIMO

4.4.1.3.1 PRU Combining

The PHY frame is made up of one or more PRUs. UL and DL PHY frame format is defined in the following sections. PHY frame is created by combining the payloads of PRU(s) specified by the MAP field. (Refer to Section 4.4.6.8 for MAP field). Figure 4.17 shows order of constructing PHY frame. PRUs specified with MAP are connected in the direction of frequency.

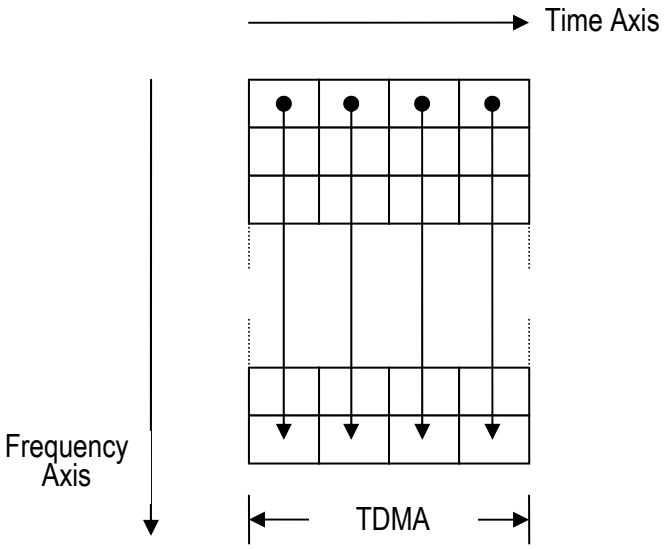

Figure 4.17 Order of Logical PRU Combining

4.4.1.4 CSCH/TCH

Figure 4.18 shows CSCH frame structure. CSCH/TCH consists of a PHY header, ACCH, TCH, CRC and TAIL bits.
A part of PHY control is used as signal symbol with hamming code. (Refer to Section 3.4.5). The signal symbol is not included in the application range of CRC calculation.

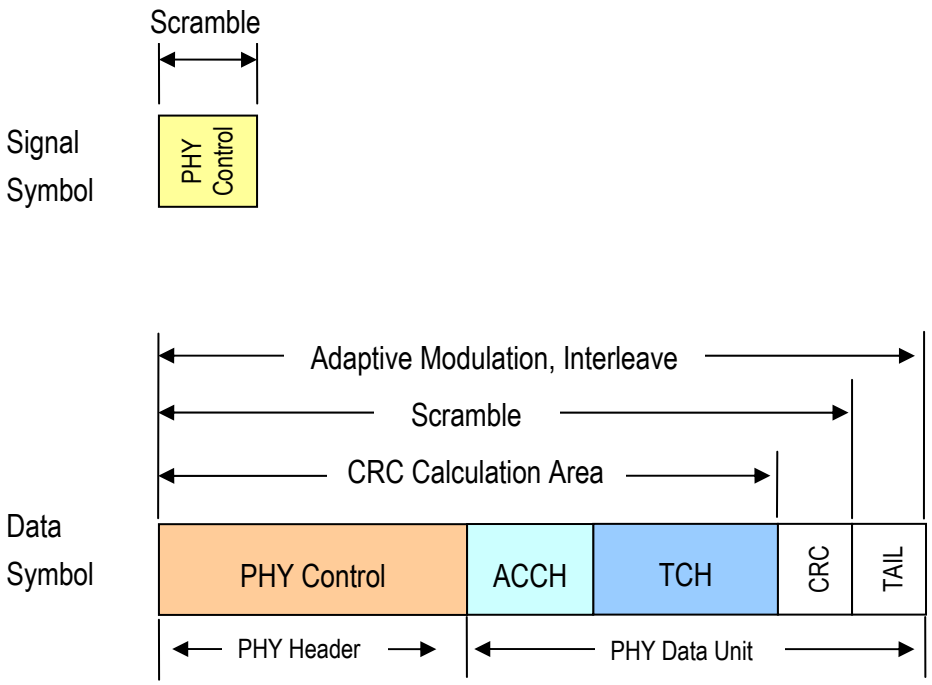

Figure 4.18 PHY Frame Format of CSCH/TCH

4.4.1.5 CSCH/CDCH

Figure 4.19 shows CSCH frame structure. CSCH/CDCH consists of a PHY header, CDCH, CRC and TAIL bits.
A part of PHY control is used as signal symbol with hamming code. (Refer to Section 3.4.5). The signal symbol is not included in the application range of CRC calculation.

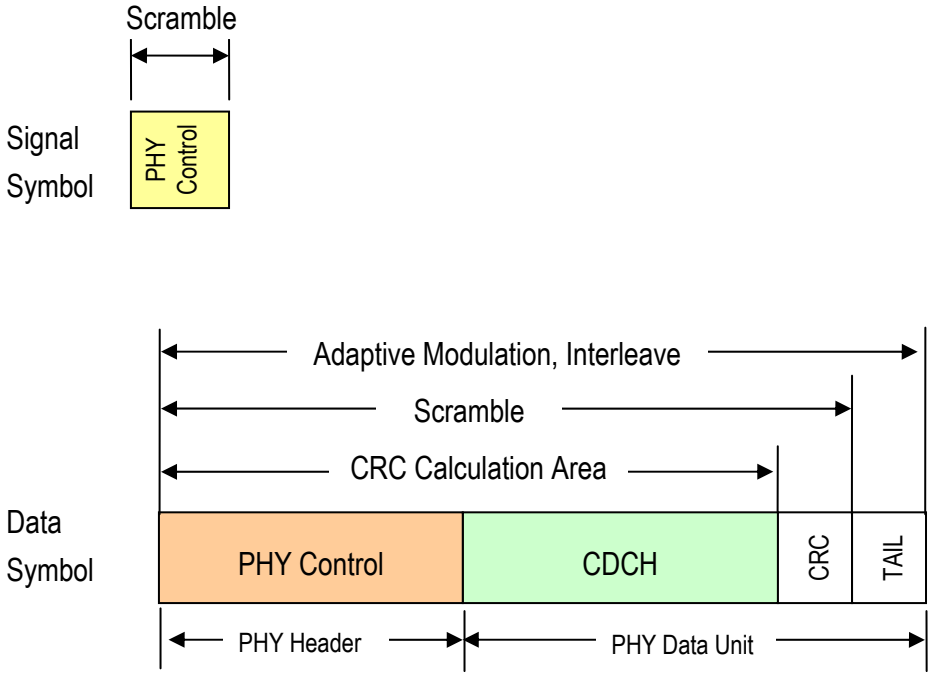

Figure 4.19 PHY Frame Format of CSCH/CDCH

4.4.1.6 AUANCH/RCH

RCH carries the Scheduling Request (SR) indication. The SR is received from higher layers. For SR, information is carried by the presence/absence of transmission of RCH from the MS. $d(0)=1$ shall be assumed in case of the presence of transmission of RCH.

Figure 4.20 illustrates the half-slot structure for RCH.

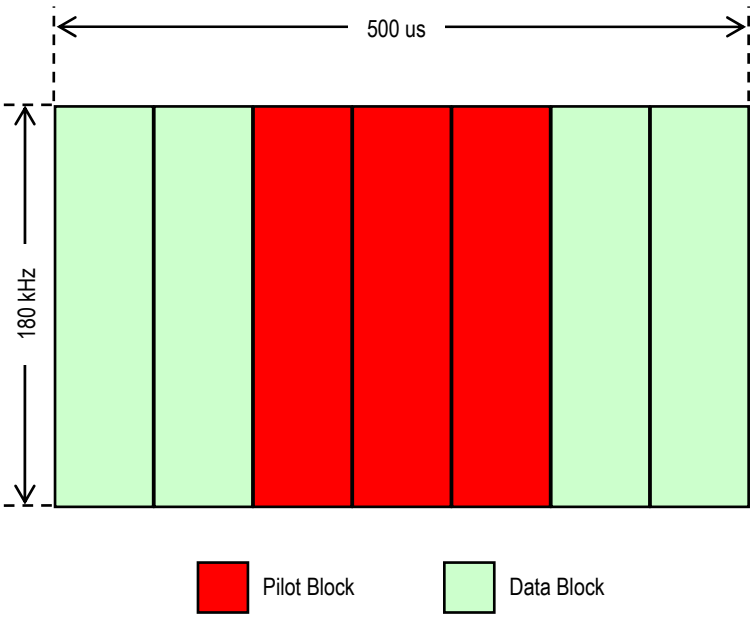

Figure 4.20 Half-slot Structure for RCH

In case of simultaneous transmission of sounding pilot and RCH, the last data block on RCH shall be punctured within the slot.

The symbol $d(0)$ shall be transmitted on all data blocks. Two block-wise spread codes are applied to the pilot blocks and the data blocks within each half-slot, respectively. Table 4.3 and Table 4.4 show the block-wise spread codes for the data blocks with a length of 4 and 3 respectively. Table 4.5 shows the block-wise spread codes for the pilot blocks.

Table 4.3 Block-wise Spread Codes for Data Blocks with a Length of 4

Code Index	Block Codes
0	[+1, +1, +1, +1]
1	[+1, -1, +1, -1]
2	[+1, -1, -1, +1]

Table 4.4 Block-wise Spread Codes for Data Blocks with a Length of 3

Code Index	Block Codes
0	[+1, +1, +1]
1	$[+1, e^{j2\pi/3}, e^{j4\pi/3}]$
2	$[+1, e^{j4\pi/3}, e^{j2\pi/3}]$

Table 4.5 Block-wise spread codes for pilot blocks

Code index	Block codes
0	[+1, +1, +1]
1	$[+1, e^{j2\pi/3}, e^{j4\pi/3}]$
2	$[+1, e^{j4\pi/3}, e^{j2\pi/3}]$

The SR shall be transmitted on the RCH resource which is MS specific and configured by higher layers. The higher layer configured parameters include SR transmission periodicity $SR_{Periodicity}$ and slot offset $N_{OFFSET,SR}$. SR transmission instances are the slots satisfying $\left(10 \times n_f + \lfloor n_s / 2 \rfloor - N_{OFFSET,SR}\right) \bmod SR_{Periodicity} = 0$, where n_f is the system frame number, and n_s = {0,1,…, 19} is the half-slot index within the frame.

4.4.1.7 AUANCH/ACKCH

ACKCH carries the uplink acknowledgement (ACK) field of corresponding received data in downlink. This field is used for the acknowledgement of PHY layer retransmission control, such as HARQ. The ACK/NACK bits are received per codeword from higher layers.

Figure 4.21 illustrates the half-slot structure for ACKCH.

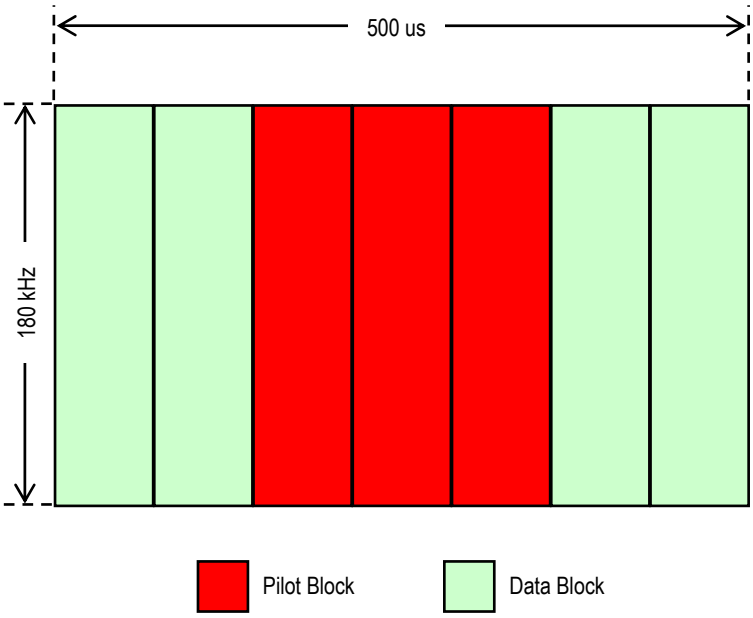

Figure 4.21 Half-slot Structure for ACKCH

In case of simultaneous transmission of sounding pilot and ACKCH, the last SC-FDMA symbol on ACKCH shall be punctured.

For ACKCH, one or two explicit bits are transmitted, respectively. The block of bits $b(0),...,b(M_{\text{bit}}-1)$ shall be modulated as described in Table 4.6, resulting in a complex-valued symbol $d(0)$. The symbol $d(0)$ shall be transmitted on all data blocks. Two block-wise spread codes are applied to the pilot blocks and the data blocks respectively. Table 4.3 and Table 4.4 show the block-wise spread codes for the data blocks with a length of 4 and 3 respectively. Table 4.5 shows the block-wise spread codes for the pilot blocks.

Table 4.6 Modulation Symbol $d(0)$ for ACKCH

$b(0),...,b(M_{\text{bit}}-1)$	$d(0)$
0	1
1	-1
00	1
01	$-j$
10	j
11	-1

4.4.1.8 AUANCH/CQICH

CQICH carries the Channel Quality Indicator (CQI). CQICH also carries the Rank Indication (RI) and Precoding Matrix Indicator (PMI) in case of MIMO.

Figure 4.22 illustrates the half-slot structure for CQICH

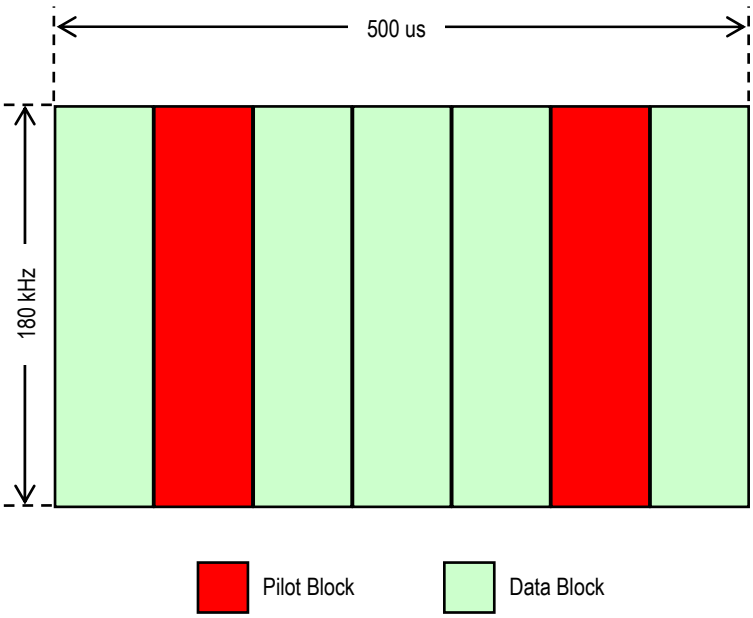

Figure 4.22 Half-slot Structure for CQICH

The channel quality bits input to the channel coding block are denoted by $a_0, a_1, a_2, a_3, ..., a_{A-1}$ where *A* is the number of bits. The number of channel quality bits depends on the transmission format.

The channel quality indication is coded with the (20, A) code.

The block of coded bits $b(0),...,b(19)$ shall firstly be QPSK modulated as described in Appendix B.10.2, resulting in a block of complex-valued modulation symbols $d(0),...,d(9)$. The *i*-th modulated symbol is transmitted on the *i*-th data block within the slot.

4.4.2 Signal Symbol

4.4.2.1 Signal Symbol Structure

Figure 4.23 shows signal symbol structure for CSCH. It consists of MI only.
Refer to Section 4.4.6 for MI field.

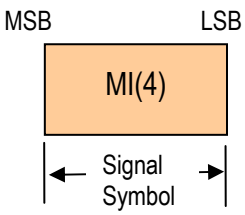

Figure 4.23 Signal Symbol Structure for CSCH

Figure 4.24 shows signal symbol structure for ANCH in case of protocol version 2. It consists of AMI only.
Refer to Section 4.4.6 for AMI field.

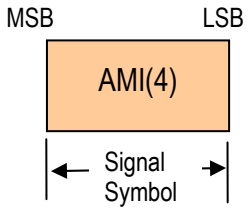

Figure 4.24 Signal Symbol Structure for ANCH(protocol version 2)

Figure 4.25 shows signal symbol structure for EDCH in case of EMB-MIMO. It consists of EMI only.

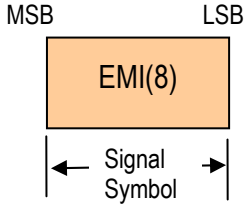

Figure 4.25 Signal Symbol Structure in case of EMB-MIMO

4.4.3 PHY Header

4.4.3.1 PHY Header Structure

A PRU format, functional channel type, and the direction of a link determine the format of a PHY header.

4.4.3.1.1 ANCH/ECCH PHY Header Structure

Figure 4.26 shows ANCH/ECCH PHY header structure. It consists of only CI.
Refer to Section 4.4.6 for CI field.

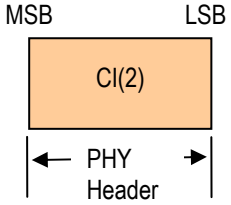

Figure 4.26 PHY Header Structure of ANCH/ECCH

4.4.3.1.2 ANCH/ICCH PHY Header Structure

Figure 4.27 shows ANCH/ICCH PHY header format for protocol version 1. DL ANCH/ICCH PHY header format consists of CI, SD and APC. UL ANCH/ICCH PHY header format consists of CI and APC.
Refer to Section 4.4.6 for each field.

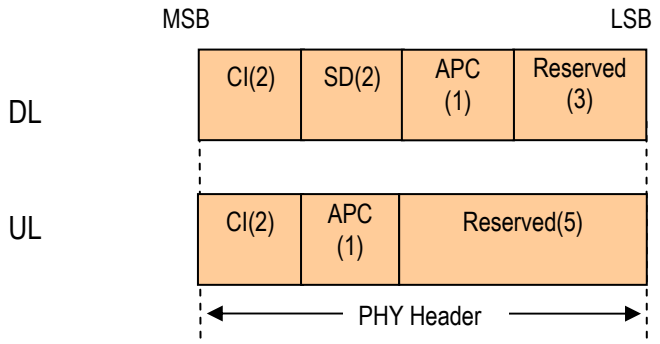

Figure 4.27 PHY Header Structure of ANCH/ICCH for protocol version 1

Figure 4.28 shows ANCH/ICCH PHY header format for protocol version 2. DL ANCH/ICCH PHY header format consists of CI, SD, APC and AMR. UL ANCH/ICCH PHY header format consists of CI, APC and AMR.
Refer to Section 4.4.6 for each field.

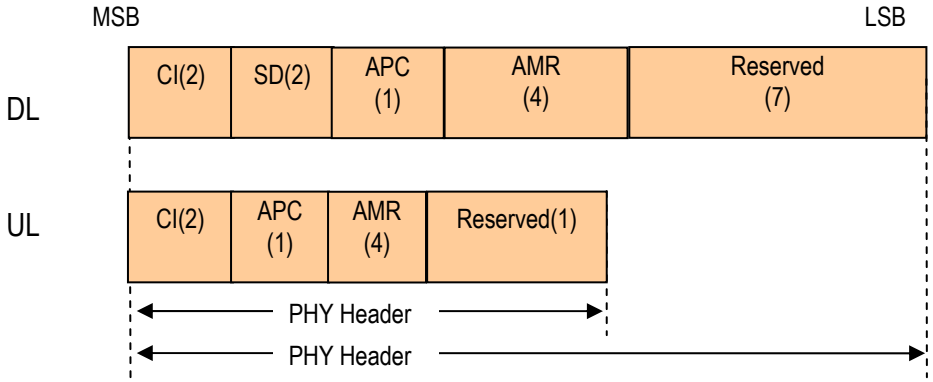

Figure 4.28 PHY Header Structure of ANCH/ICCH for protocol version 2

4.4.3.1.3 CSCH/CDCH PHY Header Structure

Figure 4.29 shows the structure of UL/DL CSCH/CDCH PHY header.
DL CSCH/CDCH PHY header contains CI, MR, SD, PC and ACK. UL CSCH/CDCH PHY header contains CI, MR, PC and ACK.
Refer to Section 4.4.6 for each field.

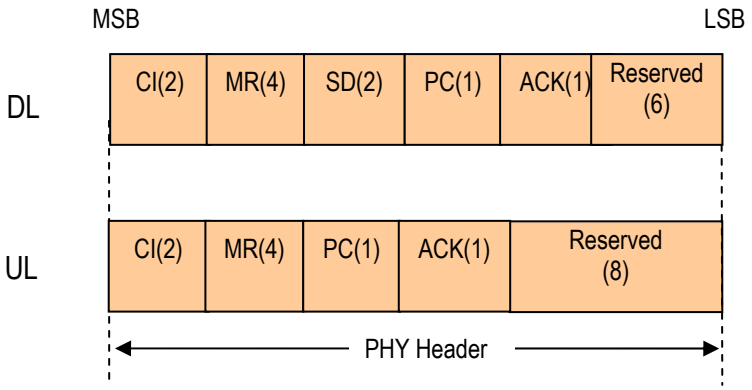

Figure 4.29 PHY Header Structure of CSCH/CDCH

4.4.3.1.4 CSCH/TCH PHY Header Structure

Figure 4.30 shows the structure of UL/DL PHY header of CSCH/TCH. CI, MR, SD, and PC are contained in DL PHY header. CI, MR and PC are contained in UL PHY header.
Refer to Section 4.4.6 for each field.

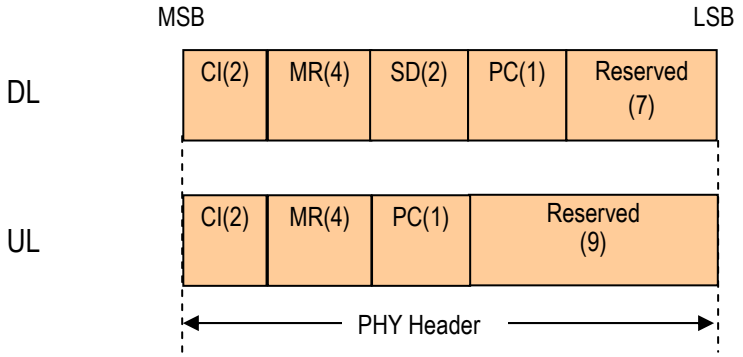

Figure 4.30 PHY Header Structure of CSCH/TCH

4.4.3.1.5 ECCH PHY Header Structure

Figure 4.31 shows the configuration of the ANCH/ECCH PHY header structure for protocol version 1.
Refer to Section 4.4.6 for each field.

PHY Header
ECCH
MSB LSB

DL ANCH PHY Payload Structure	MAP (72)	SD (2)	APC (1)	PC (4)	ACK (36)	V (7)	MI (16)	MR (16)	HC (1)	Reserved (7)
UL OFDM ANCH PHY Payload Structure	RCH (7)	APC (1)	PC (1)	ACK (36)	V (20)	MI (16)	MR (16)	HC (1)	Reserved (64)	
UL SC ANCH PHY Payload Structure	RCH (7)	APC (1)	PC (1)	ACK (36)	V (20)	MI (16)	MR (16)	HC (1)	Reserved (6)	

Figure 4.31 Configuration of ANCH for protocol version 1

Figure 4.32 shows the configuration of the ANCH/ECCH PHY header structure for protocol version 2.
Refer to Section 4.4.6 for each field.

PHY Header
ECCH
MSB LSB

DL ANCH PHY Payload Structure	SD (2)	APC (1)	PC (*)	HC (1)	AMR (4)	MT (2)	MI (*)	MR (*)	SI (2)	SR (2)	BI (10)	MAP,ACK,V and Reserved (*)
UL OFDM ANCH PHY Payload Structure	APC (1)	PC (1)	HC (1)	AMR (4)	MT (2)	MI (*)	MR (*)	SI (2)	SR (2)	RCH (7)	ACK,V and Reserved (*)	

(*) Depended on TDMA frame structure and ANCH MCS

Figure 4.32 Configuration of ANCH for protocol version 2

4.4.3.2 ECCH

ECCH is used as PHY header (Refer to Section 4.4.3.1.5).

4.4.3.2.1 CRC Error Happening on the ANCH

Table 4.7 shows the processing of MS when the CRC error happens on the DL ANCH.
MS cannot recognize the MAP field indicated by DL ANCH when it is an error. As a result, MS cannot transmit UL EXCH in the frame that the MAP cannot recognize. Then, MS sets V to 0 in UL ANCH of the frame, and it cannot recognize the ACK field indicated by DL ANCH when it is an error either. As a result, MS cannot recognize the receiving state of UL EXCH in a corresponding frame. In this case, MS will set HC to 1 in the UL ANCH, and will inform that HARQ is canceled to BS.
Furthermore, MS cannot recognize the DL EXCH assignment by DL ANCH when it is an error. As a result, MS sets all bits of ACK to 1 in the corresponding UL ANCH.

Table 4.7 Processing when CRC Error Happens in DL ANCH

Name	Processing
MAP	Act as no bandwidth is allocated.
ACK	It is impossible to identify whether ACK or NACK.
SD	Current transmission timing is maintained.
PC, APC	A current TX power is maintained.
V	It treats as 0.
HC	It is set HARQ cancel.(HC=1)
MI	Act as no bandwidth is allocated.
MR	Valid MR most recently received is used.
AMI	Act as no bandwidth is allocated.
AMR	Valid AMR most recently received is used.
MT	It treats as 0.
SI	It treats as 0.
SR	Valid SR most recently received is used.
BI	Valid BI most recently received is used.

Table 4.8 shows the processing when the CRC error happens on the UL ANCH.
BS cannot recognize the ACK field indicated by UL ANCH when it is an error. Therefore, BS cannot recognize the receiving state of DL EXCH in a corresponding frame. In this case, BS will set HC to 1 in the DL ANCH of the timing which retransmits data, and will inform that HARQ is canceled to MS.
Additionally, BS cannot recognize the MI and V field indicated by UL ANCH when it is an error. AS a result, BS cannot receive UL EXCH in the frame. Then, BS sets all bits of ACK to 1 in the corresponding DL ANCH.

Table 4.8 Processing when Error Happens in UL ANCH

Name	Processing
RCH	Act as if no bandwidth assignment request has been sent.
ACK	If CRC error happens, it is impossible to identify whether it is.
PC , APC	A current TX power is maintained.
V	It treats as 0.
HC	It is set HARQ cancel.(HC=1)
MI	Act as no bandwidth is allocated.
MR	Valid MR most recently received is used.
AMI	Act as no bandwidth is allocated.
AMR	Valid AMR most recently received is used.
MT	It treats as 0.
SI	It treats as 0.
SR	Valid SR most recently received is used.

4.4.4 PHY Payload

4.4.4.1 PHY Payload Structure

Figure 4.33 shows the configuration of PHY payload.

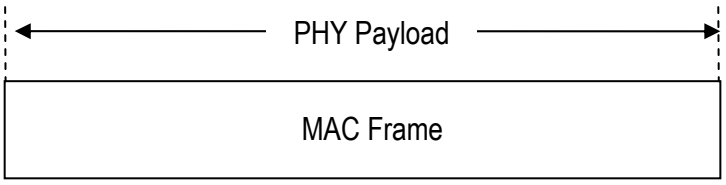

Figure 4.33 Configuration of PHY Payload

4.4.5 PHY Trailer

4.4.5.1 CRC

The PHY payload length and CRC length are changed flexibly according to the MCS. In this section, PHY payload length, and CRC length is defined according to the MCS and the PHY data unit.
CRC (Cyclic Redundancy Code) 16 is inserted. Section 4.4.1 shows the range of the CRC calculation.

4.4.5.2 TAIL

TAIL field is inserted so that the state of the shift register of the convolutional encoding module becomes empty. Assuming K is the constraint length of error correction, then TAIL bit length is K-1 bits. Number of TAIL bits is 6.

4.4.6 PHY Control Layer

This section explains each field in the PHY frame.

4.4.6.1 Channel Identifier (CI)

CI shows what kind of information has been transmitted by PRU.

4.4.6.1.1 CI of ANCH

It indicates the channel identifier of PHY payload in FM-Mode. Table 4.9 shows the values of the CI field.

Table 4.9 Value of CI Field

Bit		Channel Identifier of PHY Payload
2	1	
0	0	ANCH/ICCH
0	1	ANCH/ECCH
1	0	Reserved
1	1	Reserved

4.4.6.1.2 CI of CSCH

It indicates the channel identifier of PHY payload indicated in QS-Mode. Table 4.10 shows the value of the CI field.

Table 4.10 Value of CI Field

Bit		Channel Identifier of PHY Payload
2	1	
0	0	CSCH/TCH
0	1	CSCH/CDCH
1	0	Reserved
1	1	Reserved

4.4.6.2 Shift Direction (SD)

SD controls the UL transmission timing of the MS. Table 4.11 specifies the value of the SD field and its corresponding processing. (Refer to Section 9.5.2).

Table 4.11 Value of SD Field

Bit		Operation of MS
2	1	
0	0	Stay
0	1	One Step Backward
1	0	Two Steps Forward
1	1	One Step Forward

(Note) Unit = 30 / (512 + 64) us

4.4.6.3 ANCH Power Control (APC)

APC controls the transmission power of the ANCH of the MS so that signals from different MSs will be received by BS at the same level. Because once UL radio wave which has different reception level is detected, BS will control the UL transmission power either by increasing or decreasing APC field according to the UL reception level for each MS. (Refer to Section 9.5.1).

Table 4.12 Value of APC Field

APC Value	Operation of MS
0	Decrease transmission power.
1	Increase transmission power.

(Note) Unit = 1 dB

4.4.6.4 Power Control (PC)

PC controls the transmission power of the EXCH or CSCH of the MS so that signals from different MSs will be received by BS at the same level. Because once UL radio wave which has different reception level is detected, BS will control the UL transmission power either by increasing or decreasing PC field according to the UL reception level for each MS. (Refer to Section 9.5.1).

Table 4.13 Value of PC Field

PC Value	Operation of MS
0	Decrease transmission power.
1	Increase transmission power.

(Note) Unit = 1 dB

UL ECCH contains power control fields for 1 frame by 1 bit, and DL ECCH contains power control fields for each slot, and controls each slot separately. Table 4.14 shows the PC field of each slot. This field length of DL ECCH is depended on TDMA frame structure as the number of UL slots "N_{USL}".

Table 4.14 PC Field Composition

	First Bit	Second Bit	…	Last Bit
Controlled Slot	Slot 1	Slot 2	…	Slot N_{USL}

Uplink power control controls the transmit power of the different optional uplink physical channels. The current maximum power can not exceed the configured MS transmitted power. The MS Transmit power for the AUEDCH transmission is mainly determined by the bandwidth of the AUEDCH resource assignment, pathloss and the value configured in TPC command. TPC command is included in ADECCH with ADECI format 0 or jointly coded with other TPC commands in ADECCH with ADECI format 3/3A whose CRC parity bits are scrambled with TPC-AUEDCH-MSID. The MS Transmit power for the Sounding Pilot transmission is based on the MS Transmit power for the AUEDCH transmission and some adjustment is introduced.
The MS Transmit power for the AUANCH transmission is mainly determined by a AUANCH format dependent value and TPC command. TPC command is included in a ADECCH with ADECI format 1A/1B/1D/1/2A/2 or sent jointly coded with other MS specific AUANCH correction values on a ADECCH with ADECI format 3/3A whose CRC parity bits are scrambled with TPC-AUANCH-MSID.

4.4.6.5 MCS Indicator (MI) and MCS Request (MR)

The MI field indicates the MCS of the adaptive modulation part in the DL PHY frame. The MR field indicates the UL MCS requested by the MS according to the result of the UL signal monitoring. Table 4.15 and Table 4.16 show the correspondence between each field and the MCS.

Table 4.15 MCSs for OFDM

Bit				Modulation Class	Puncturing Rate	Efficiency
4	3	2	1			
0	0	0	0	BPSK	1	0.5
0	0	0	1		3/4	0.67
0	0	1	0	QPSK	1	1
0	0	1	1		4/6	1.5
0	1	0	0	Reserved	-	-
0	1	0	1	16QAM	1	2

Bit				Modulation Class	Puncturing Rate	Efficiency
4	3	2	1			
0	1	1	0		4/6	3
0	1	1	1	64QAM	3/4	4
1	0	0	0		6/10	5
1	0	0	1	256QAM	4/6	6
1	0	1	0		8/14	7

Table 4.16 MCSs for SC

Bit				Modulation Class	Puncturing Rate	Efficiency
4	3	2	1			
0	0	0	0	π/2-BPSK	1	0.5
0	0	0	1		3/4	0.67
0	0	1	0	π/4-QPSK	1	1
0	0	1	1		4/6	1.5
0	1	0	0	8PSK	3/4	2
0	1	0	1	16QAM	1	2
0	1	1	0		4/6	3
0	1	1	1	64QAM	3/4	4
1	0	0	0		6/10	5
1	0	0	1	256QAM	4/6	6
1	0	1	0		8/14	7

4.4.6.5.1 MI and MR in ECCH

In ECCH MI and MR are specified for every slot. Figure 4.34 shows the structure of the MI/MR field in ECCH. This field length is depended on TDMA frame structure as the number of UL slots "N_{USL}" and DL slots "N_{DSL}".

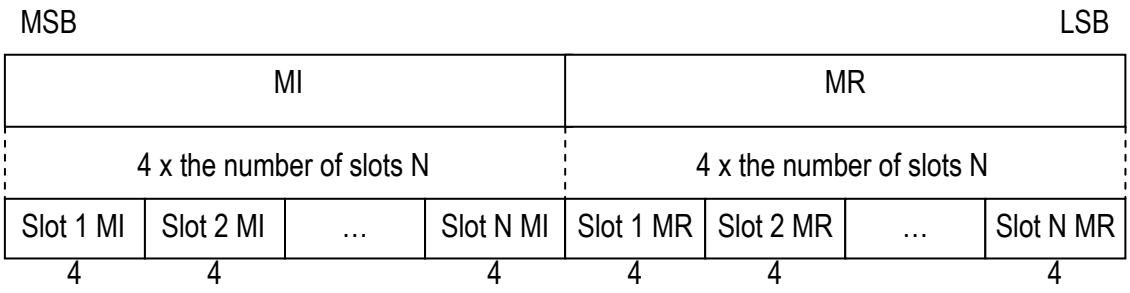

Figure 4.34 MI and MR Indication in ECCH

4.4.6.5.1.1 MI Indication Timing of DL

Figure 4.35 shows an example of MI indication timing. DL MI applies to the EXCH to which the MAP is in the same ANCH points in case of 5ms frame. DL MI indicates MCS of DL EXCH of one frame after in case of (a) timing 1, and indicates MCS of DL EXCH two frames after in the case of (b) timing 2. The definitions of timing 1 and 2 refer to Section 6.4.1.1.1.
The response timing between MS and BS is negotiated in access establishment phase.

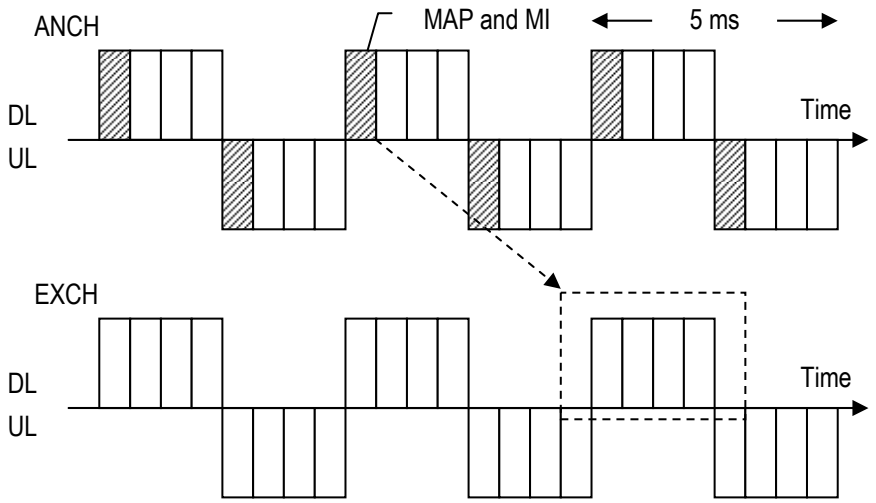

(a) Timing 1 Allocation

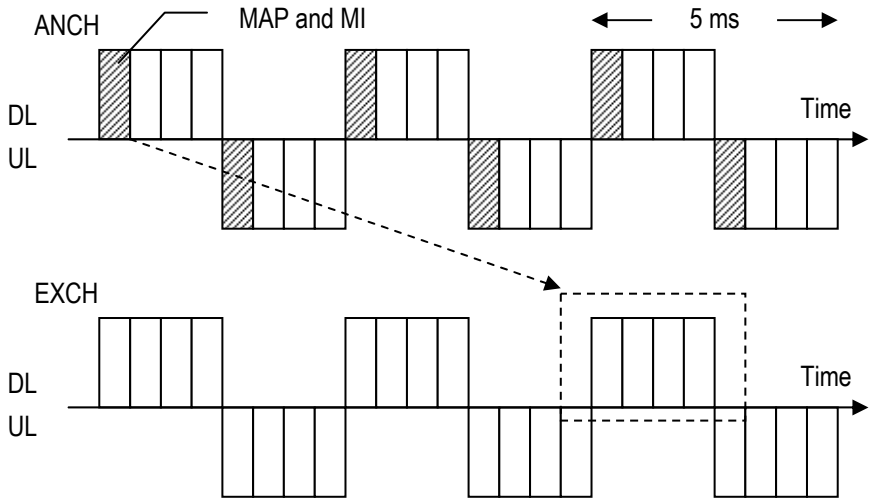

(b) Timing 2 Allocation

Figure 4.35 Example of DL MI Indication Timing in ECCH on 5 ms frame

4.4.6.5.1.2 MI Indication Timing of UL

Figure 4.36 shows an example of MI indication timing. Regardless of MAP allocation timing, UL MI applies to UL EXCH of the same frame as the UL ANCH that contains the MI.

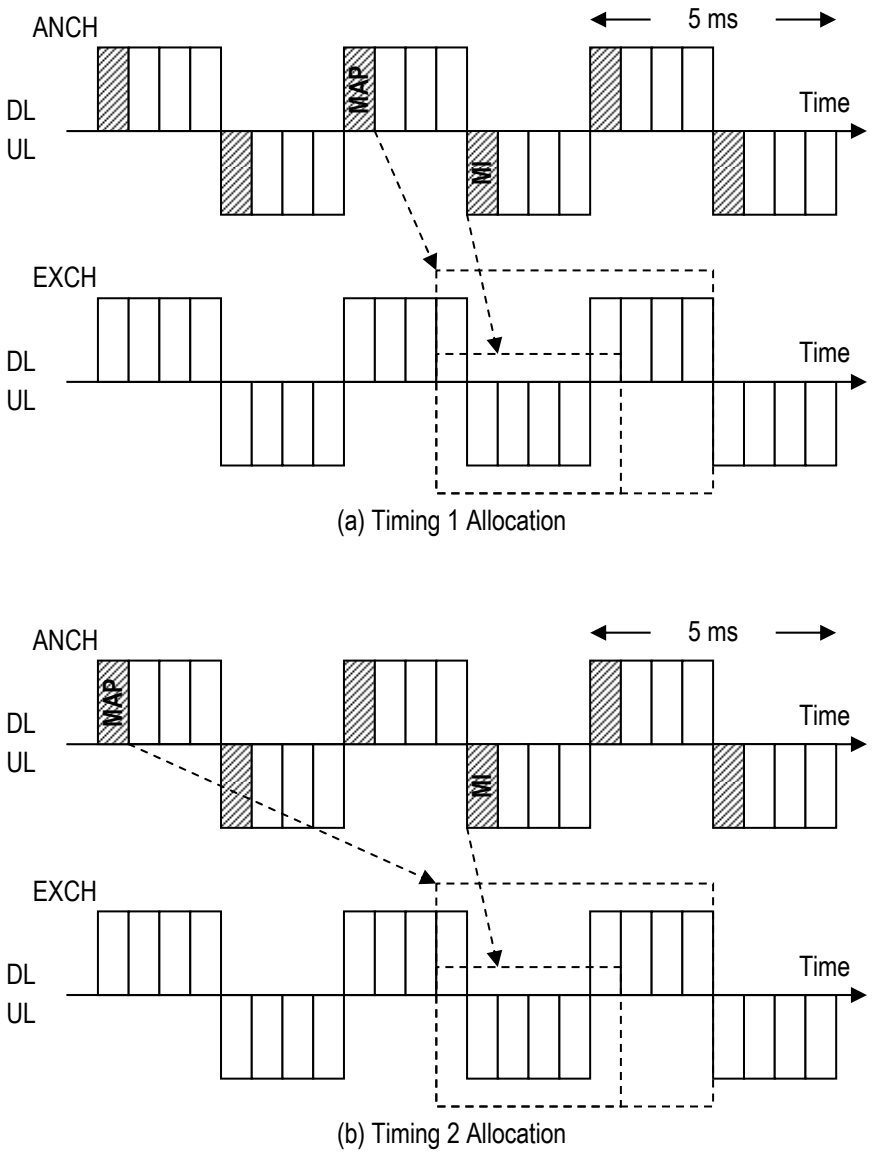

Figure 4.36 Example of UL MI Indication Timing in ECCH on 5ms frame

4.4.6.5.2 MI and MR in CSCH

In CSCH, MI and MR show the MCS of the PRU itself under communication.

4.4.6.5.2.1 MI Indication Timing of DL

Figure 4.37 shows the frame position where MI field of DL PHY header is applied. MI applies to the DL PHY payload following DL PHY header in the same frame.

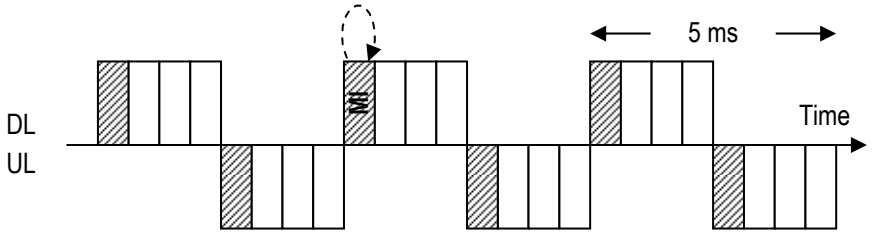

Figure 4.37 DL MI Indication Timing in CSCH

4.4.6.5.2.2 MI Indication Timing of UL

Figure 4.38 shows the frame position where MI field of UL PHY header is applied. MI applies to the UL PHY payload following UL PHY header in the same frame.

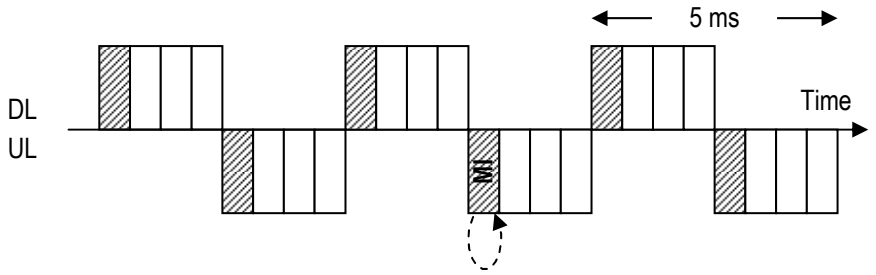

Figure 4.38 UL MI Indication Timing in CSCH

4.4.6.6 Acknowledgement (ACK)

This field indicates the acknowledgement of corresponding received data.
Table 4.17 shows the value of the ACK field. This field is used for the acknowledgement of PHY layer retransmission control, such as HARQ. Each ACK is encoded as a binary '1' and each NACK is encoded as a binary '0'.

Table 4.17 Value of ACK Field

ACK Value	Description
0	0 stands for NACK.
1	1 stands for ACK.

4.4.6.6.1 ACK in ECCH

This field indicates the acknowledgement of the data. The acknowledgement bit and the EDCHs correspond to each other in connected order of the PRU. The acknowledgement bits are allotted from the head corresponding to the EDCHs of the frame. (Refer to Section 9.2). The frame corresponds to the acknowledgement concerned transmission frame. ACK bits corresponding to the unused acknowledgement field are assumed invalid.

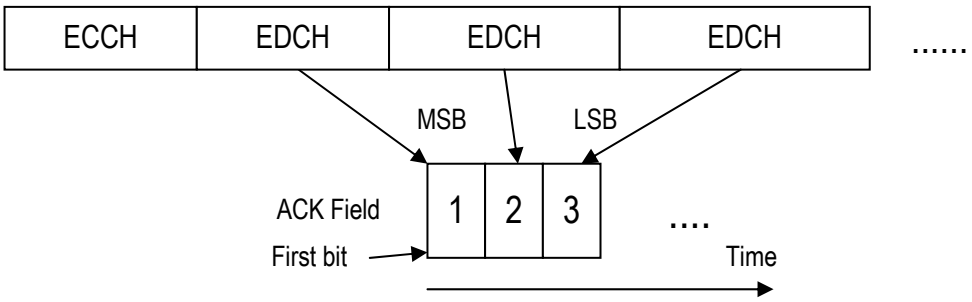

Figure 4.39 Correspondence between EDCH and ACK Field

The number of DL ACK "N_{DACK}" and UL ACK "N_{UACK}" for protocol version 1 is defined as 36bits. ACK for protocol version 2 depends on the number of effective SCH and the number of "reverse link stream" and TDMA frame structure. The number of ACK for protocol version 2 should be calculated as follows.

$$N_{DACK} = N_{SL} \cdot \left\lceil \frac{N_{SCH}}{2} \right\rceil \cdot N_{UST}$$

$$N_{UACK} = N_{SL} \cdot \left\lceil \frac{N_{SCH}}{2} \right\rceil \cdot N_{DST}$$

,where "N_{DST}" denotes the number of stream (SI) for DL. "N_{UST}" denotes the number of stream (SI) for UL. ,where "N_{SL}" denotes larger number of DL and UL slots, either "N_{DSL}" or "N_{USL}".
$\lceil \ \rceil$ denotes ceil function.

4.4.6.6.1.1 Response Timing of DL ACK

DL ACK is generated based on CRC calculation and sent in the DL ANCH that comes three frames after UL EXCH reception.

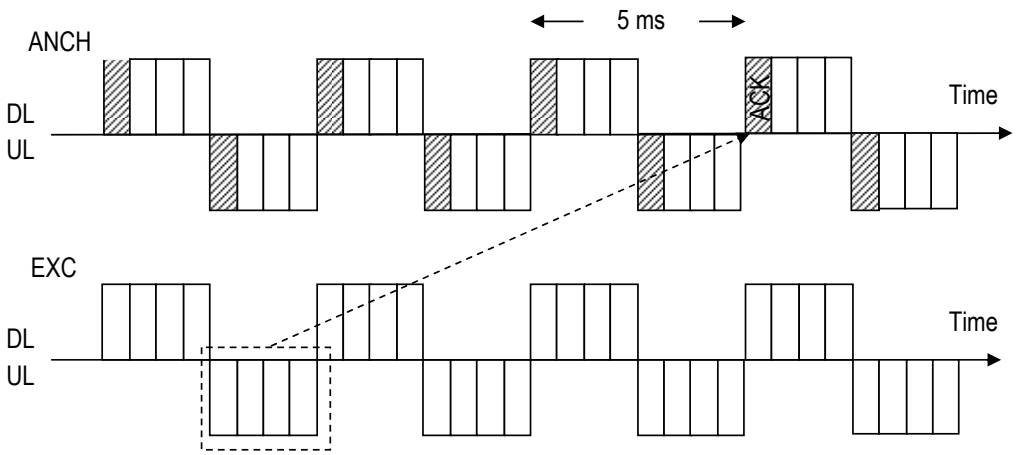

Figure 4.40 DL ACK Response Timing

4.4.6.6.1.2 Response Timing of UL ACK

Figure 4.41 shows UL ACK response timing. UL ACK is generated based on CRC calculation and sent in UL ANCH which comes two frames after DL EXCH reception.

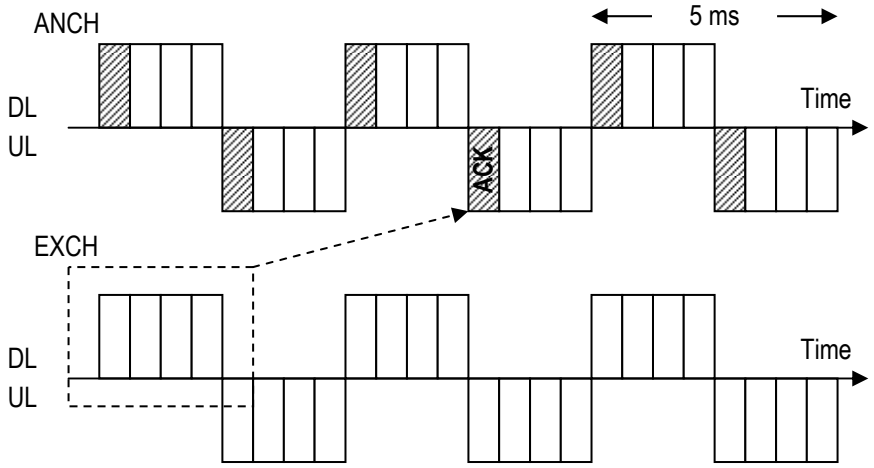

Figure 4.41 UL ACK Response Timing

4.4.6.6.2 ACK in CDCH

This field indicates the acknowledgement of the data.

4.4.6.6.2.1 Response Timing of DL ACK

Figure 4.42 shows the frame position where ACK field of DL PHY header is applied. DL ACK is generated based on CRC calculation and sent in the DL CDCH that comes 7.5 ms after UL CDCH reception.

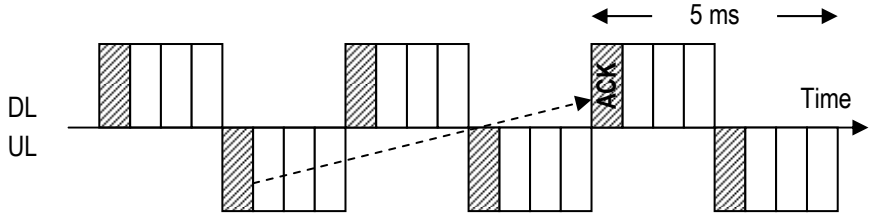

Figure 4.42 DL ACK Response Timing

4.4.6.6.2.2 Response Timing of UL ACK

Figure 4.43 shows the frame position where ACK field of UL PHY header is applied. UL ACK is generated based on CRC calculation and sent in the UL CDCH that comes 7.5 ms after UL CDCH reception.

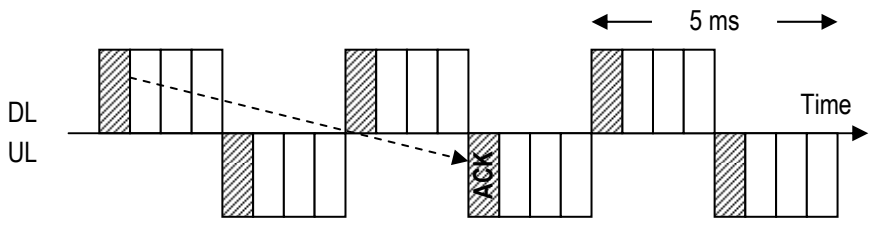

Figure 4.43 UL ACK Response Timing

4.4.6.6.3 ACK in AUANCH/ACKCH

This field indicates the ACK response of the received downlink data. The ACK/NACK bits are received per codeword from higher layers.
Two ACK/NACK feedback modes are supported on ACKCH through higher layer configuration.

- ACK/NACK bundling and
- ACK/NACK multiplexing

4.4.6.6.3.1 Response Timing of UL ACK

The MS shall upon detection of a ADEDCH transmission or a ADECCH indicating downlink SPS release within slot(s) $n-k$, where $k \in K$ and K is defined in Table 4.18 intended for the MS and for which ACK/NACK response shall be provided, transmit the ACK/NACK response in UL slot *n*.

Table 4.18 Downlink association set index $K = \{k_0, k_1, \cdots k_{M-1}\}$

UL-DL Configuration	Slot *n*									
	0	1	2	3	4	5	6	7	8	9
0	-	-	6	-	4	-	-	6	-	4
1	-	-	7, 6	4	-	-	-	7, 6	4	-
2	-	-	8, 7, 4, 6	-	-	-	-	8, 7, 4, 6	-	-
3	-	-	7	7	5	-	-	7	7	-

4.4.6.6.3.2 ACK/NACK bundling

ACK/NACK bundling is performed per codeword across M multiple DL slots associated with a single UL slot *n*, where M is the number of elements in the set K defined in Table 4.18, by a logical AND operation of all the individual ADEDCH transmission (with and without corresponding ADECCH) ACK/NACKs and ACK in response to ADECCH indicating downlink SPS release. The bundled 1 or 2 ACK/NACK bits are transmitted using ACKCH.

For ACK/NACK bundling, the MS shall use ACKCH resource $n_{\mathrm{ACKCH}}^{(1)}$ for transmission of ACK response in slot n, where

- If there is ADEDCH transmission indicated by the detection of corresponding ADECCH or there is ADECCH indicating DL SPS release within slot(s) $n-k$, where $k \in K$ is a set of M elements $\{k_0, k_1, \cdots k_{M-1}\}$ depending on the slot n and the UL-DL configuration, the MS first selects a p value out of {0, 1, 2, 3} which makes $N_p \le n_{1C} < N_{p+1}$ and shall use $n_{ACKCH}^{(1)} = (M - m - 1) \times N_p + m \times N_{p+1} + n_{1C} + N_{ACKCH}^{(1)}$, where K is defined in Table 4.18, $n_{ACKCH}^{(1)}$ is configured by higher layers, $N_p = \max\{0, \lfloor [N_{\mathrm{RU}}^{\mathrm{DL}} \times (N_{\mathrm{sc}}^{\mathrm{RU}} \times p - 4)]/36 \rfloor\}$, and n_{1C} is the number of the first cluster of RP group used for transmission of the corresponding ADECCH in slot $n-k_m$ and the corresponding m, where k_m is the smallest value in set K such that MS detects a ADECCH in slot $n-k_m$.
- If there is only a ADEDCH transmission where there is not a corresponding ADECCH detected within slot(s) $n-k$, where $k \in K$ and K is defined in Table 4.18, the value of $n_{\mathrm{ACKCH}}^{(1)}$ is determined according to higher layer configuration.

For ACK/NACK bundling, if the MS detects that at least one downlink assignment has been missed, the MS shall not transmit ACK/NACK in case the MS is not transmitting on AUEDCH.

4.4.6.6.3.3 ACK/NACK multiplexing

For ACK/NACK multiplexing and a slot *n* with $M > 1$, where M is the number of elements in the set K defined in Table 4.18, spatial ACK/NACK bundling across multiple codewords within a DL slot is performed by a logical AND operation of all the corresponding individual ACK/NACKs and ACKCH with channel selection is used. For ACK/NACK multiplexing and a slot *n* with $M = 1$, spatial ACK/NACK bundling across multiple codewords within a DL slot is not performed, 1 or 2 ACK/NACK bits are transmitted using ACKCH.

For ACK/NACK multiplexing and a slot n with $M = 1$ where M is the number of elements in

the set K defined in Table 4.18, the MS shall use ACKCH resource $n_{\mathrm{ACKCH}}^{(1)}$ for transmission of ACK response in slot n, where

- If there is ADEDCH transmission indicated by the detection of corresponding ADECCH or there is ADECCH indicating DL SPS release within slot(s) $n-k$, where $k \in K$ is a set of M elements $\{k_0, k_1, \cdots k_{M-1}\}$ depending on the slot n and the UL-DL configuration, the MS first selects a p value out of {0, 1, 2, 3} which makes $N_p \le n_{1C} < N_{p+1}$ and shall use $n_{ACKCH}^{(1)} = (M-m-1) \times N_p + m \times N_{p+1} + n_{1C} + N_{ACKCH}^{(1)}$, where K is defined in Table 4.18, $n_{\mathrm{ACKCH}}^{(1)}$ is configured by higher layers, $N_p = \max\{0, \lfloor [N_{\mathrm{RU}}^{\mathrm{DL}} \times (N_{\mathrm{sc}}^{\mathrm{RU}} \times p - 4)]/36 \rfloor\}$, and n_{1C} is the number of the first cluster of RP group used for transmission of the corresponding ADECCH in slot $n-k_m$ and the corresponding m, where k_m is the smallest value in set K such that MS detects a ADECCH in slot $n-k_m$.

- If there is only a ADEDCH transmission where there is not a corresponding ADECCH detected within slot(s) $n-k$, where $k \in K$ and K is defined in Table 4.18, the value of $n_{\mathrm{ACKCH}}^{(1)}$ is determined according to higher layer configuration.

For ACK/NACK multiplexing and slot n with $M > 1$, where M is the number of elements in the set K defined in Table 4.18, denote $n_{\mathrm{ACKCH,i}}^{(1)}$ as the ACKCH resource derived from slot $n-k_i$ and HARQ-ACK(i) as the ACK response from slot $n-k_i$, where $k_i \in K$ (defined in Table 4.18) and $0 \le i \le M-1$.

- For a ADEDCH transmission or a ADECCH indicating downlink SPS release in slot $n-k_i$ where $k_i \in K$, $n_{ACKCH,i}^{(1)} = (M-i-1) \times N_p + i \times N_{p+1} + n_{1C,i} + N_{ACKCH}^{(1)}$, where p is selected from {0, 1, 2, 3} such that $N_p \le n_{1C} < N_{p+1}$, $N_p = \max\{0, \lfloor [N_{\mathrm{RU}}^{\mathrm{DL}} \times (N_{\mathrm{sc}}^{\mathrm{RU}} \times p - 4)]/36 \rfloor\}$, $n_{\mathrm{1C,i}}$ is the number of the first cluster of RP group

used for transmission of the corresponding ADECCH in slot $n-k_i$, and $N_{\mathrm{ACKCH}}^{(1)}$ is configured by higher layers.

- For a ADEDCH transmission where there is not a corresponding ADECCH detected in slot $n-k_i$, the value of $n_{\mathrm{ACKCH,i}}^{(1)}$ is determined according to higher layer configuration.

For ACK/NACK multiplexing and slot n with $M>1$, the MS shall transmit a QPSK symbol on a selected ACKCH resource $n_{\mathrm{ACKCH}}^{(1)}$ in slot n according to the M ACK responses. The ACKCH resource $n_{\mathrm{ACKCH}}^{(1)}$ is selected from the derived ACKCH resources $n_{\mathrm{ACKCH,i}}^{(1)}$.

4.4.6.6.4 ACK in ADHICH

This field indicates the ACK response of the received uplink data.

4.4.6.6.4.1 Response Timing of DL ACK

For scheduled UL data transmissions in slot *n*, a MS shall determine the corresponding ADHICH resource carrying ACK/NACK in slot $n+k_{ADHICH}$, where k_{ADHICH} is given in Table 4.19.

Table 4.19 k_{ADHICH} value

UL/DL Configuration	UL slot index n									
	0	1	2	3	4	5	6	7	8	9
0			4	7	6			4	7	6
1			4	6				4	6	
2			6					6		
3			4	6	6			4	7	

4.4.6.7 Channel quality report

The time and frequency resources that can be used by the MS to report CQI, PMI, and RI are controlled by the BS. In an optional way, for spatial multiplexing, the MS shall determine a RI corresponding to the number of useful transmission layers. For transmit diversity, RI is equal to one.

A MS shall transmit periodic CQI/PMI, or RI reporting on CQICH in slots with no AUEDCH

allocation. A MS shall transmit periodic CQI/PMI or RI reporting on AUEDCH in slots with AUEDCH allocation.

The set of subbands (*S*) a MS shall evaluate for CQI reporting spans the entire downlink system bandwidth. A subband is a set of *k* contiguous PRUs where *k* is a function of system bandwidth. Note the last subband in set *S* may have fewer than *k* contiguous PRUs depending on $N_{\mathrm{RU}}^{\mathrm{DL}}$.

The number of subbands for system bandwidth given by $N_{\mathrm{RU}}^{\mathrm{DL}}$ is defined by $N = \left\lceil N_{\mathrm{RU}}^{\mathrm{DL}} / k \right\rceil$.

The subbands shall be indexed in the order of increasing frequency and non-increasing sizes starting at the lowest frequency.

4.4.6.7.1 CQI definition

Each CQI consists of a 4-bit CQI index, which indicates a suggested modulation order and coding rate. CQI index 0 is used tor indicating out of range. Based on an unrestricted observation interval in time and frequency, the MS shall derive for each CQI value reported in uplink slot *n* the highest CQI index between 1 and 15, which satisfies the following condition, or CQI index 0 if CQI index 1 does not satisfy the condition:

- A single ADEDCH transport block with a combination of modulation scheme and transport block size corresponding to the CQI index, and occupying a group of downlink physical resource units termed the CQI reference resource, could be received with a transport block error probability not exceeding 0.1.

A combination of modulation scheme and transport block size corresponds to a CQI index if:

- the combination could be signalled for transmission on the ADEDCH in the CQI reference resource according to the relevant Transport Block Size table, and
- the modulation scheme is indicated by the CQI index, and
- the combination of transport block size and modulation scheme when applied to the reference resource results in the code rate which is the closest possible to the code rate indicated by the CQI index. If more than one combination of transport block size and modulation scheme results in a code rate equally close to the code rate indicated by the CQI index, only the combination with the smallest of such transport block sizes is relevant.

The CQI reference resource is defined as follows:

- In the frequency domain, the CQI reference resource is defined by the group of downlink physical resource units corresponding to the band to which the derived CQI value relates.

- In the time domain, the CQI reference resource is defined by a single downlink slot n-n_{CQI_ref},
    - where for periodic CQI reporting n_{CQI_ref} is the smallest value greater than or equal to 4, such that it corresponds to a valid downlink slot;

    A downlink slot shall be considered to be valid if:
        - it is configured as a downlink slot for that MS, and
        - it does not contain a DSS field in case the length of DSS is $7680 \cdot T_s$ and less, and
        - it does not fall within a configured measurement gap for that MS.

    If there is no valid downlink slot for the CQI reference resource, CQI reporting is omitted in uplink slot n.
- In the layer domain, the CQI reference resource is defined by any RI and PMI on which the CQI is conditioned.

4.4.6.7.2 PMI definition

For AMTs 4, 5, and 6, precoding feedback is used for channel dependent codebook based precoding and relies on MSs reporting PMI. A MS shall report PMI based on the feedback modes. Each PMI value corresponds to a codebook index.
For other AMTs, PMI reporting is not supported.

4.4.6.7.3 Periodic CQI/PMI/RI reporting on CQICH

A MS is semi-statically configured by higher layers to periodically feed back different CQI, PMI, and RI on the CQICH. Multiple reporting modes, namely 1-0, 1-1, 2-0 and 2-1, are supported. In reporting mode 1-0, only a wideband CQI will be reported. In reporting mode 1-1, a wideband CQI and a single PMI will be reported. In reporting mode 2-0, both wideband CQI and subbamd CQI will be reported. In reporting mode 2-1, wideband CQI, subband CQI and a signle PMI will be reported.
The periodic CQI reporting mode is given by the parameter *cqi-FormatIndicatorPeriodic* which is configured by higher-layer signaling.
For subband CQI, a CQI report in a certain slot describes the channel quality in a particular part or in particular parts of the bandwidth described subsequently as bandwidth part (BP) or parts. The bandwidth parts shall be indexed in the order of increasing frequency and non-increasing sizes starting at the lowest frequency. For subband CQI, the MS selects a single subband out of

N_j subbands of a bandwidth part, and reports its CQI index along with a corresponding *L*-bit label indexed in the order of increasing frequency, where $L = \lceil \log_2 \lceil N_{\mathrm{RU}}^{\mathrm{DL}} / k / J \rceil \rceil$.

Four CQI/PMI and RI reporting types with distinct periods and offsets are supported for each CQICH reporting mode:

- Type 1 report supports CQI feedback for the MS selected sub-bands
- Type 2 report supports wideband CQI and PMI feedback.
- Type 3 report supports RI feedback
- Type 4 report supports wideband CQI

In the case where wideband CQI/PMI reporting is configured:

- The reporting instances for wideband CQI/PMI are slots satisfying $(10 \times n_f + \lfloor n_s / 2 \rfloor - N_{OFFSET,CQI}) \bmod N_P = 0$, where n_f is the system frame number, and n_s = {0,1,…, 19} is the half-slot index within the frame, and $N_{OFFSET,CQI}$ is the corresponding wideband CQI/PMI reporting offset (in slots) and N_P is the wideband CQI/PMI period (in slots).
- In case RI reporting is configured, the reporting interval of the RI reporting is an integer multiple M_{RI} of wideband CQI/PMI period N_P (in slots).
    - The reporting instances for RI are slots satisfying $(10 \times n_f + \lfloor n_s / 2 \rfloor - N_{OFFSET,CQI} - N_{OFFSET,RI}) \bmod (N_P \cdot M_{RI}) = 0$, where $N_{OFFSET,RI}$ is the corresponding relative RI offset to the wideband CQI/PMI reporting offset (in slots).
    - The reporting offset for RI $N_{OFFSET,RI}$ takes values from the set {0, −1, …, −(N_P−1)}.
    - In case of collision of RI and wideband CQI/PMI the wideband CQI/PMI is dropped.
- The periodicity N_P and offset $N_{OFFSET,CQI}$ for wideband CQI/PMI reporting are determined based on the parameter configured by higher layer signaling. The periodicity M_{RI}, and offset $N_{OFFSET,RI}$ for RI reporting are determined based on the parameter configured by higher layer signaling.

In the case where both wideband CQI/PMI and subband CQI reporting are configured:

- The reporting instances for wideband CQI/PMI and subband CQI are slots satisfying $(10 \times n_f + \lfloor n_s / 2 \rfloor - N_{OFFSET,CQI}) \bmod N_P = 0$, where n_f is the system frame number, and n_s = {0,1,…, 19} is the half-slot index within the frame, $N_{OFFSET,CQI}$ is the corresponding wideband CQI/PMI reporting offset (in slots) , and N_P is the period of CQI/PMI reporting instance (in slots).
  - The wideband CQI/PMI report has period H^*N_P, and is reported on the slots satisfying $(10 \times n_f + \lfloor n_s / 2 \rfloor - N_{OFFSET,CQI}) \bmod (H \cdot N_P) = 0$. The integer H is defined as $H=J^*K+1$, where J is the number of bandwidth parts.
  - Between every two consecutive wideband CQI/PMI reports, the remaining J^*K reporting instances are used in sequence for subband CQI reports on K full cycles of bandwidth parts except when the gap between two consecutive wideband CQI/PMI reports contains less than J^*K reporting instances due to a system frame number transition to 0, in which case the MS shall not transmit the remainder of the subband CQI reports which have not been transmitted before the second of the two wideband CQI/PMI reports. Each full cycle of bandwidth parts shall be in increasing order starting from bandwidth part 0 to bandwidth part J-1.
- In case RI reporting is configured, the reporting interval of RI is M_{RI} times the wideband CQI/PMI period, and RI is reported on the same CQICH cyclic shift resource as both the wideband CQI/PMI and subband CQI reports.
  - The reporting instances for RI are slots satisfying $(10 \times n_f + \lfloor n_s / 2 \rfloor - N_{OFFSET,CQI} - N_{OFFSET,RI}) \bmod (H \cdot N_P \cdot M_{RI}) = 0$.
  - In case of collision between RI and wideband CQI/PMI or subband CQI, the wideband CQI/PMI or subband CQI is dropped.
- The parameter K is configured by higher-layer and the parameter $N_{OFFSET,RI}$ is selected from the set {0, -1, …,-(N_P -1), - N_P }.
- The periodicity N_P and offset $N_{OFFSET,CQI}$ for CQI reporting are determined based on the parameter configured by higher layer signaling. The periodicity M_{RI}, and offset $N_{OFFSET,RI}$ for RI reporting are determined based on the parameter configured by higher layer signaling.

The CQI/PMI or RI report shall be transmitted on the CQICH resource which is MS specific and configured by higher layers.

For periodic CQI/PMI reporting, the following periodicity values apply depending on the UL/DL configuration:

- The reporting period of $N_P = 1$ is only applicable to UL/DL configurations 0, 1 and 3, where all UL slots in a radio frame are used for CQI/PMI reporting.
- The reporting period of $N_P = 5$ is only applicable to UL/DL configurations 0, 1, 2 and 3.
- The reporting periods of $N_P = \{10, 20, 40, 80, 160\}$ are applicable to all UL/DL configurations.

A RI report in a periodic reporting mode is valid only for CQI/PMI report on that periodic reporting mode.

For the calculation of CQI/PMI conditioned on the last reported RI, in the absence of a last reported RI the MS shall conduct the CQI/PMI calculation conditioned on the lowest possible RI as given by the bitmap parameter *codebookSubsetRestriction* .

4.4.6.8 MAP

The PRU numbers are assigned as shown in Figure 4.44. This number is called logical PRU number. MAP indicates logical PRU number, which includes CCH PRU(s). As for logical PRU number, refer to section 4.1.1.2.1, 4.1.1.2.2 and .4.1.1.2.2.

MAP origin indicates the starting point of the logical PRU number for the MS. BS decides MAP origin by negotiating with MS at access establishment phase.

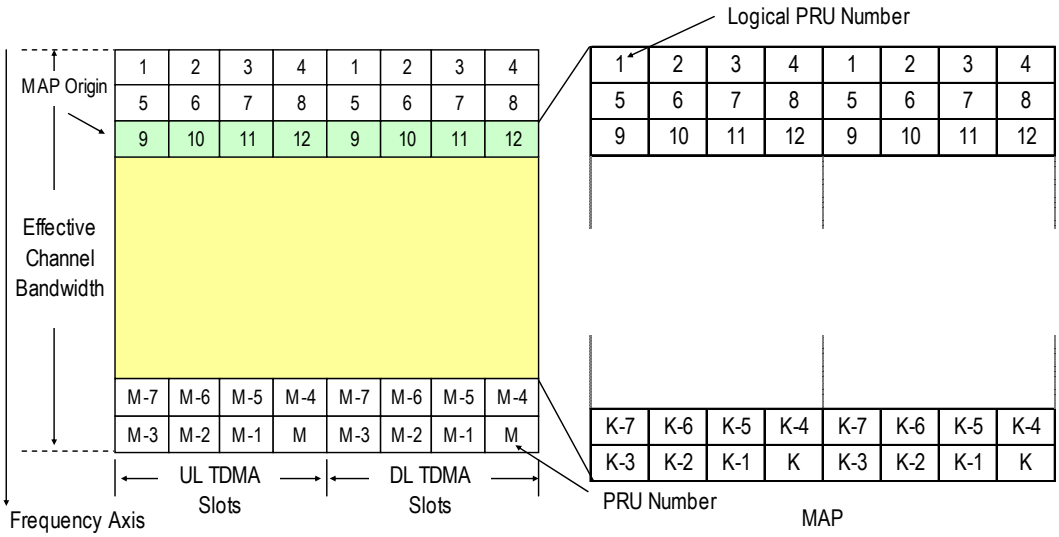

Figure 4.44 Logical PRU Numbering in case of symmetric frame

While the number of MAP "N_{MAP}" for protocol version 1 is fixed value as 72bits, the number of MAP for protocol version 2 should be calculated as follows.

$$N_{MAP} = N_{SL} \cdot N_{SCH}$$

,where "N_{SL}" denotes larger number of slots, either "N_{DSL}" or "N_{USL}". "N_{SCH}" denotes the number of SCH.

Figure 4.45 shows the relationship between logical PRU number and the bit assignment in the MAP field. Logical PRU number is assigned from the top of the MAP field. 1 stands for the allocated PRU and 0 stands for not allocated ones.

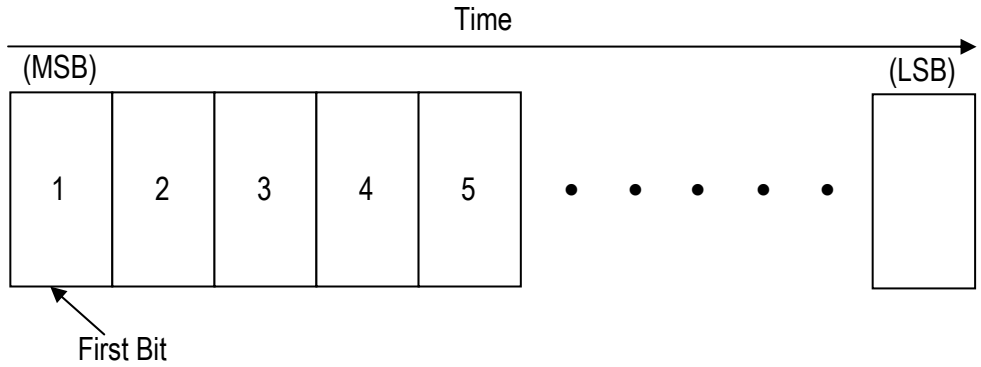

Figure 4.45 Correspondence between Logical PRU Number and Bit Position in the MAP Field

4.4.6.8.1 Response Timing of MAP

Figure 4.46 shows MAP indication timing. BS determines this response time for each MS by negotiating with the MS at access establishment phase.
MAP field indicates the PRU which can be used as EXCH one frame after in case of (a) timing 1. It indicates the PRU which can be used as EXCH two frames after in case of (b) timing 2.

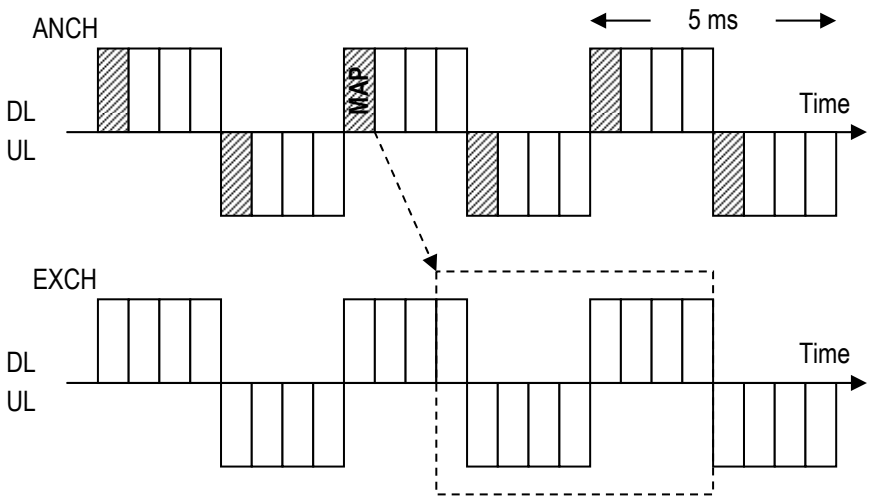

(a) Timing 1 Allocation

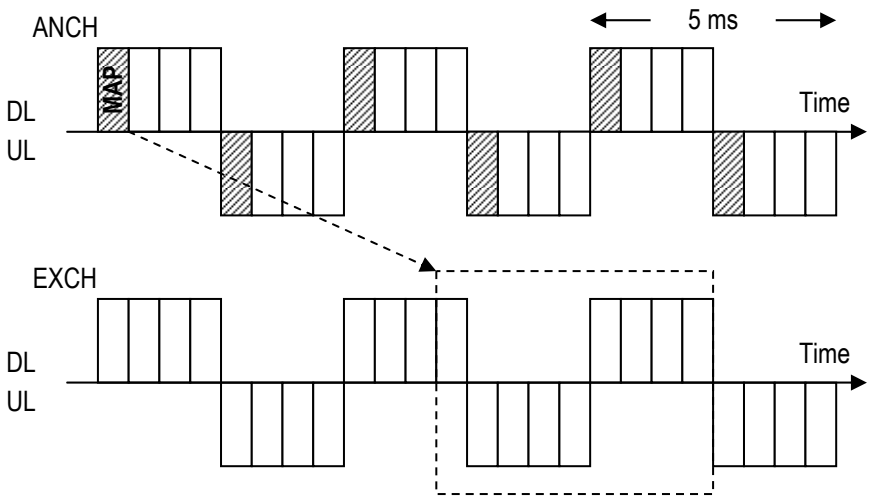

(b) Timing 2 Allocation

Figure 4.46 Example of MAP Indication Timing

4.4.6.9 Validity (V)

This field shows the number of the PRU(s) that contains the valid data in a TDMA frame. The data is then transmitted from the beginning of the PHY frame. In case when no data is transmitted, DTX instead of user data will be put into the data symbols.
Figure 4.47 and Figure 4.48 show V field each DL and UL ECCH for protocol version 1. Figure 4.49 shows V field both of DL and UL ECCH for protocol version 2.
V means effective PRU. The number of DL V "NDV" for protocol version 1 is fixed value as 7 bits, and the number of UL V "NUV" is 20bits. On the other hand, control method of DL V for protocol version 2 should be controlled slot-by-slot as with UL V for protocol version 1. In addition, both value of "NDV" and "NUV" are related on TDMA frame structure as the number of slot. The number of V, "NUV" and "NDV", for protocol version 2 should be calculated as follows.

$$N_{DV} = N_{DSL} \cdot \lceil \log_2((N_{SCH} + 1) \cdot N_{DST}) \rceil$$
$$N_{UV} = N_{USL} \cdot \lceil \log_2((N_{SCH} + 1) \cdot N_{UST}) \rceil$$

,where "N_{DST}" denotes the number of stream (SI) for DL. "N_{UST}" denotes the number of stream (SI) for UL. "N_{USL}" denotes the number of UL slot. "N_{DSL}" denotes the number of DL slot.
$\lceil \ \rceil$ denotes ceil function. "N_{SCH}" denotes the number of SCH.

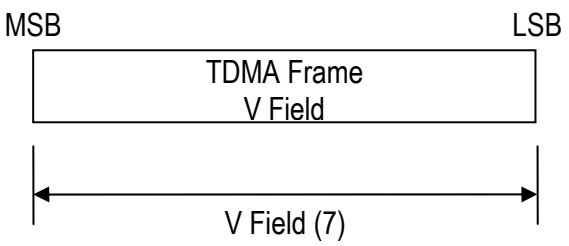

Figure 4.47 V field Structure in DL ECCH for protocol version 1

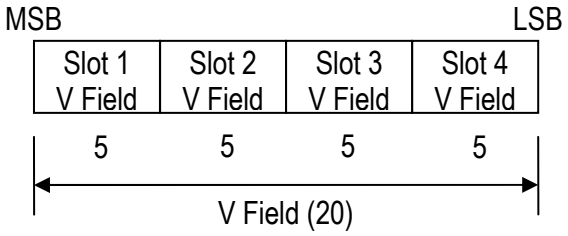

Figure 4.48 V Field Structure in UL ECCH for protocol version 1

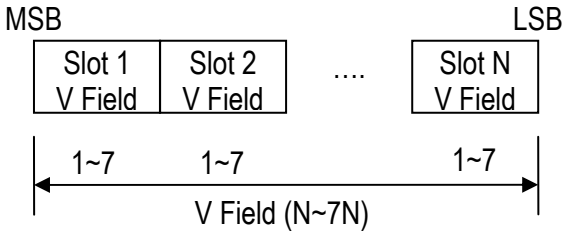

Figure 4.49 V field Structure in UL / DL ECCH for protocol version 2 (the number of SCH between 1 to 30)

Figure 4.50 shows an example of transmitting with DL OFDM when V field is 5. PRU(s) indicated by the V field is recognized as a PHY data unit. Remaining PRU(s) will carry DTX.

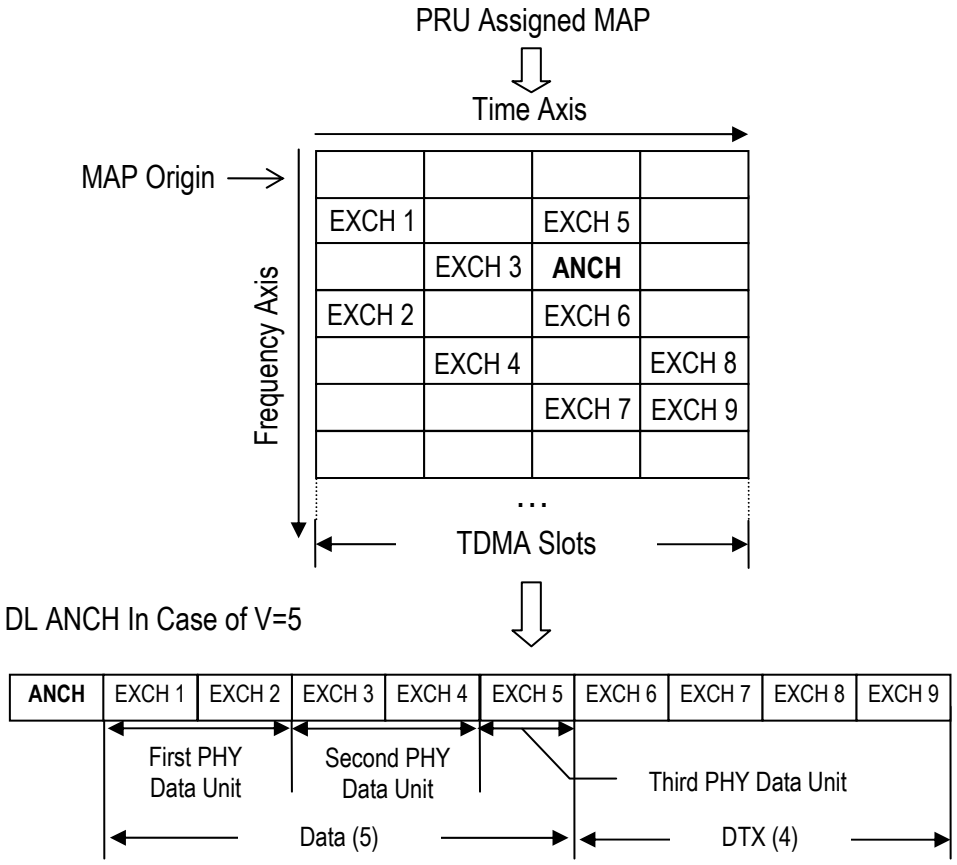

Figure 4.50 Example of Recognition Method of Data Burst and DTX from MAP Field for V as 5 (Case of DL V field for protocol version 1)

Figure 4.51 shows an example of transmitting with UL OFDM when V fields are (Slot 1=2, Slot 2=0, Slot 3=1, Slot 4=2) respectively. PRU(s) indicated by the V field is recognized as a PHY data unit. Remaining PRU(s) will carry DTX.

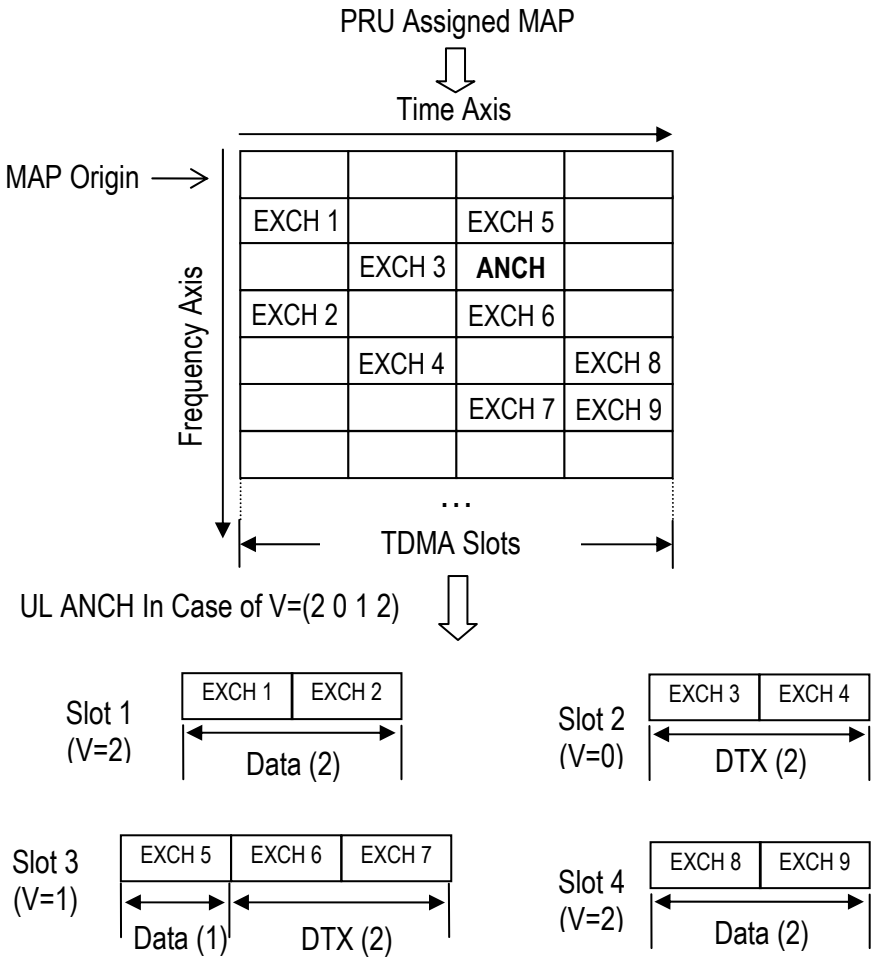

Figure 4.51 Example of Recognition Method of Data Burst and DTX from MAP Field for V as (2,0,1,2) (Case of UL V field for protocol version 1 and DL / UL V field for protocol version 2)

Used PRU numbers and positions when performing HARQ retransmission are specified in HARQ rule described in section 9.2.2.2, so sender and receiver share these structure. V indicates PRU number for HARQ retransmission data and new data (includes MAC-ARQ retransmission data); V ignores DTX PRUs.

Figure 4.52 shows an example of V value of DL in case of performing HARQ. In this case, 15 PRUs are assigned in the MAP in ANCH. There is a PRU of new data and 5 PRUs of HARQ retransmission data. HARQ data are pushed into smaller numbered SCHs in each slot. V indicates PRU number that has valid data.

MAP=15, V=6

				SCH1
ANCH	HARQ	HARQ	HARQ	SCH2
HARQ	HARQ	DTX	DTX	SCH3
Data	DTX	DTX	DTX	SCH4
DTX	DTX	DTX	DTX	SCH5
				:

Figure 4.52 Example of V value of DL in case of performing HARQ

4.4.6.9.1 V Indication Timing of DL

Figure 4.53 shows an example of V indication timing. DL V applies to the EXCH to which the MAP is in the same ANCH points.
DL V field indicates the number of valid EDCH(s) one frame after in the case of (a) timing 1. It indicates the number of valid EDCH(s) two frames after in the case of (b) timing 2.

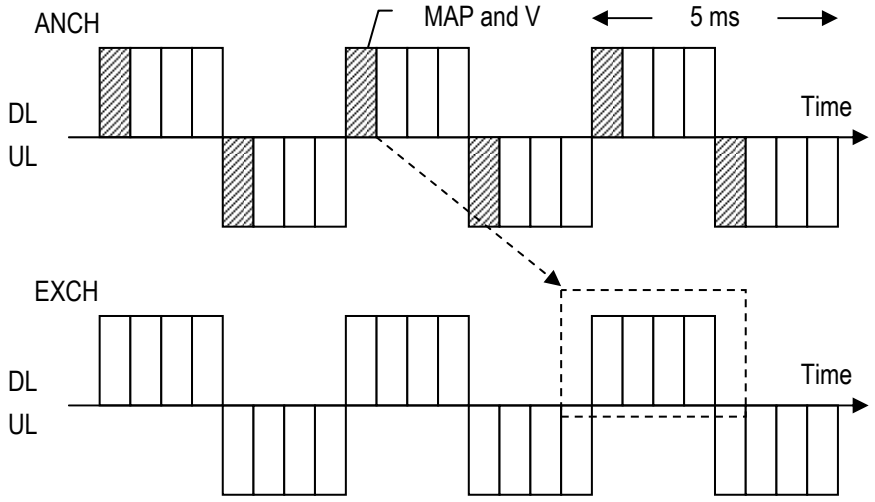

(a) Timing 1 MAP Allocation

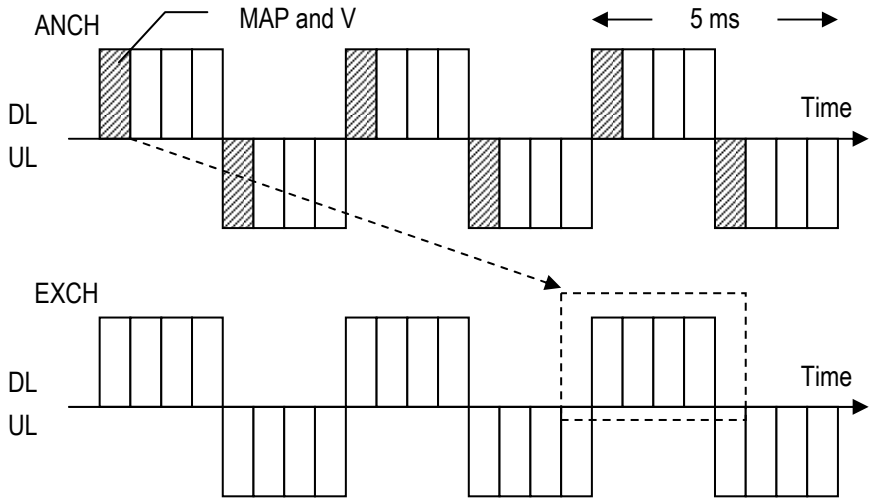

(b) Timing 2 MAP Allocation

Figure 4.53 V Indication Timing in DL ECCH

4.4.6.9.2 V Indication Timing of UL

Figure 4.54 shows an example of V indication timing. Regardless of MAP allocation timing, UL V applies to the UL EXCH of the same frame as the UL ANCH that contains the V. The MAP response time for each MS is determined by negotiation at access establishment phase.

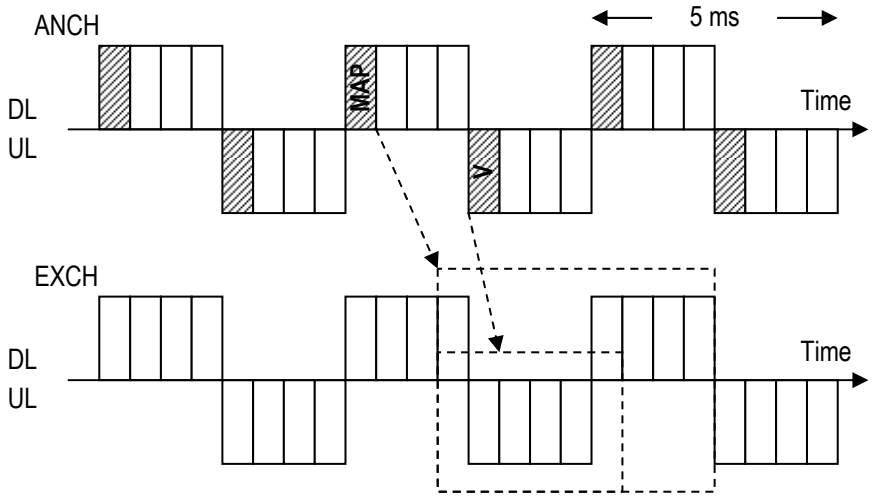

(a) Timing 1 MAP Allocation

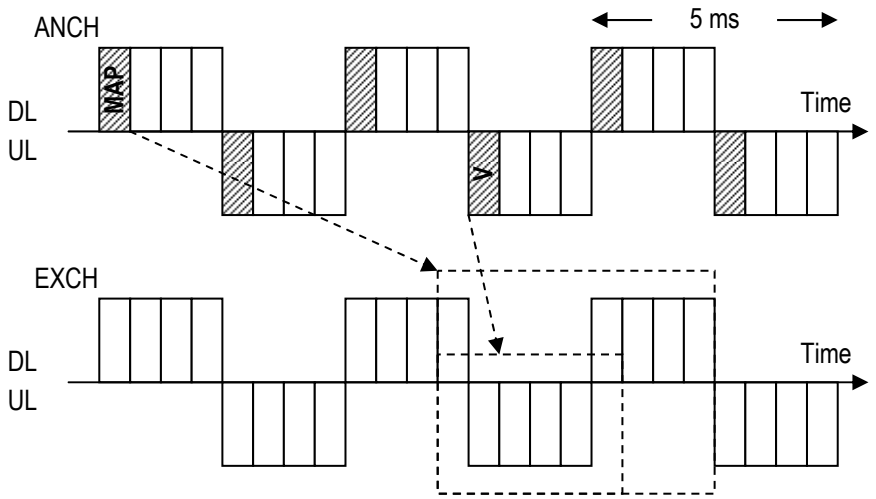

(b) Timing 2 MAP Allocation

Figure 4.54 V Indication Timing in UL ECCH

4.4.6.10 HARQ Cancel (HC)

This field indicates cancellation of HARQ. HARQ can be activated when some conditions are fulfilled. MS or BS received set-to-1 HC field, cancels the HARQ process. Refer to Section 4.4.3.2.1.

Table 4.20 Value of HC Field

HC Value	Description
0	HARQ Enable
1	HARQ Cancel

4.4.6.10.1 HC Indication Timing of DL

Figure 4.55 shows an example of HC indication timing. DL HC applies to the EXCH to which the MAP is in the same ANCH points.
DL HC field indicates whether HARQ one frame later is valid or not in case of (a) timing 1. It indicates whether HARQ two frames later is valid or not in case of (b) timing 2.

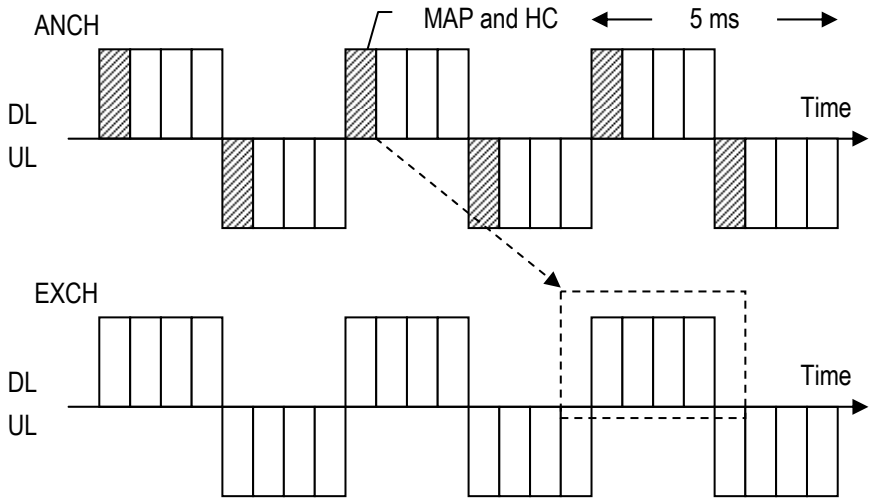

(a) Timing 1 MAP Allocation

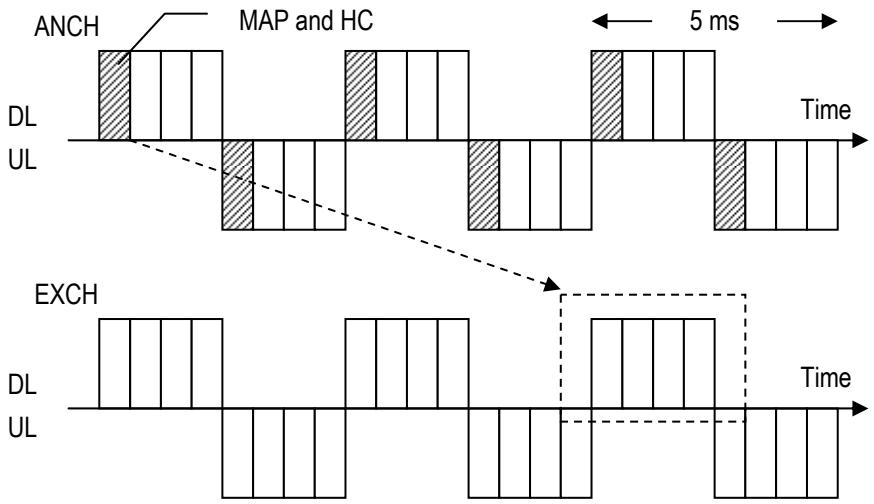

(b) Timing 2 MAP Allocation

Figure 4.55 HC Indication Timing in DL ECCH

4.4.6.10.2 HC Indication Timing of UL

Figure 4.56 shows an example of HC indication timing. Regardless of MAP allocation timing, UL HC applies to the UL EXCH in the same frame as the UL ANCH that contains the HC.

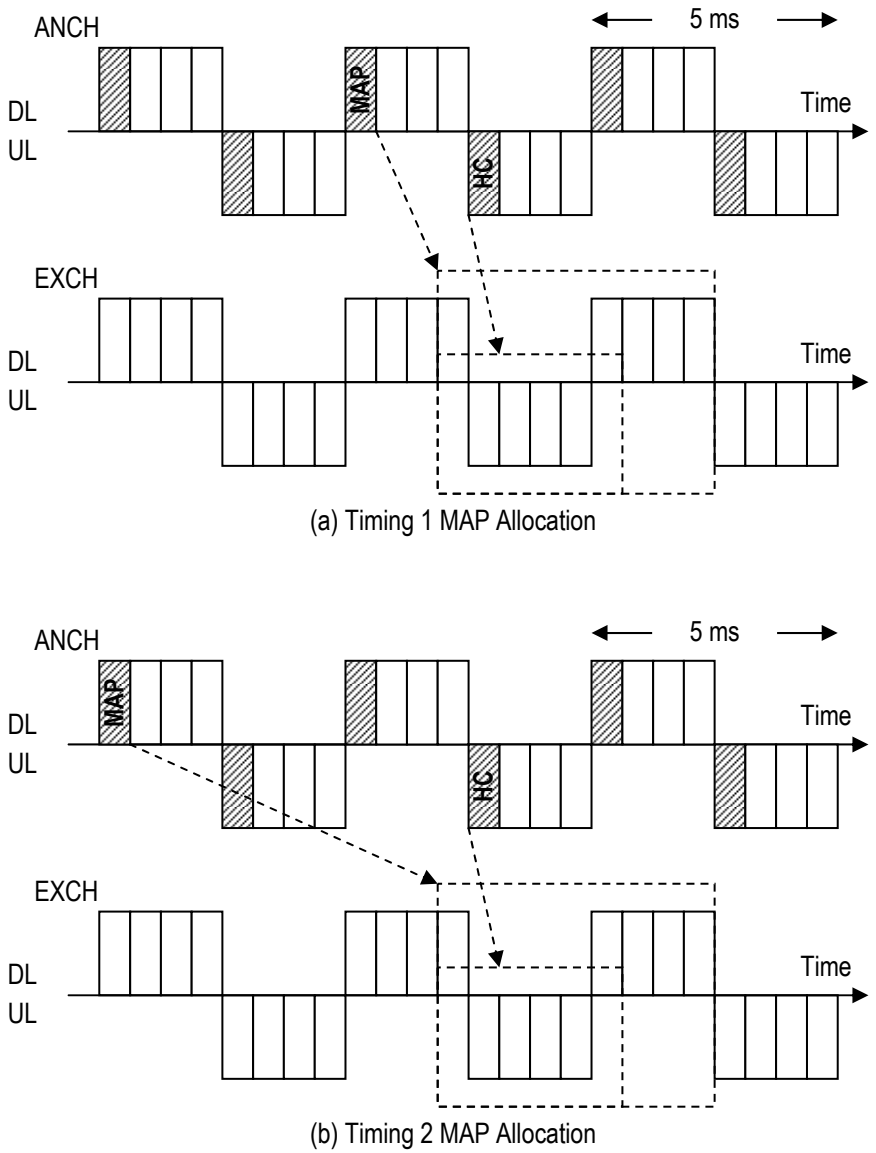

Figure 4.56 HC Indication Timing in UL ECCH

4.4.6.11 Request Channel (RCH)

This field is used for the bandwidth allocation request or transmission power margin notification from the MS to BS. The type of content is distinguished by identifier in RCH field. MS informs BS of data size to be sent.
Figure 4.57 shows structure of the RCH field.

Bit	7	6	5	4	3	2	1
	Identifier		Data				

Figure 4.57 RCH field

Table 4.21 Value of Identifier Field

Bit		Data Identifier of RCH Field
7	6	
0	0	UL Data Size Notification
0	1	Transmission Power Margin Notification
1	0	Reserved
1	1	Reserved

4.4.6.11.1 UL Data Size Notification

Figure 4.58 shows UL Data Size Notification format. This field is used for the bandwidth allocation request from the MS to BS. MS informs BS of data size to be sent.

Bit	7	6	5	4	3	2	1
	0	0	Unit		Data Length		

Figure 4.58 UL Data Size Notification

Table 4.22 Unit Field

Unit Bit 5	4	
0	0	MAC layer control message
0	1	100 bytes
1	0	1 kbytes
1	1	10 kbytes

For example, Unit="0 1" (100 bytes), Data Length="1 0 0" then it indicates 400 bytes. Note that it does not show accurate value.

4.4.6.11.2 Transmission Power Margin Notification

Figure 4.59 shows Transmission Power Margin Notification format. This field is used for the notification of transmission power margin from MS to BS. BS may refer to this value when BS allocates PRU.

Bit	7	6	5	4	3	2	1
	0	1	Transmission Power Margin Notification				

Figure 4.59 Transmission Power Margin Notification

Table 4.23 Transmission Power Margin Notification

Bit 5	4	3	2	1	
0	0	0	0	0	0 dB
0	0	0	0	1	1 dB
0	0	0	1	0	2 dB
		:			
1	1	1	1	1	31 dB

4.4.6.12 Request Channel (RCH)

Request Channel (RCH) is allocated in MSL1(MSL1).

4.4.6.12.1 Optional UL Data Size Notification

UL Data Size Notification MSL1 control elements consist of either: Short UL Data Size Notification and Truncated UL Data Size Notification format : one FCG ID field and one corresponding UL Data Size (Figure 4.60); or Long UL Data Size Notification format : four UL Data Size, corresponding to FCG IDs #0 through #3 (Figure 4.61).

The UL Data Size Notification formats are identified by MSL1 PDU subheaders with FCIDs as specified in Table 4.58. The fields FCG ID and UL Data Size are defined as follow:

- FCG ID: The function Channel Group ID field identifies the group of function channel(s) which UL Data Size is being reported. The length of the field is 2 bits;

- UL Data Size: The UL Data Size field identifies the total amount of data available across all function channels of a function channel group after the MSL1 PDU has been built. The amount of data is indicated in number of bytes. The length of this field is 6 bits.

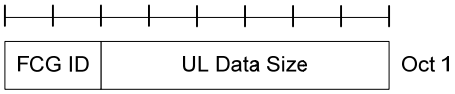

Figure 4.60: Short UL Data Size Notification and Truncated UL Data Size Notification MSL1 control element

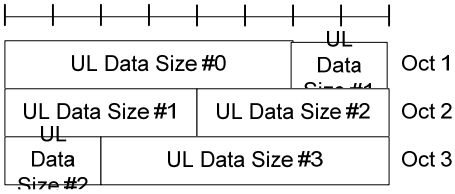

Figure 4.61:Long UL Data Size Notification MSL1 control element

4.4.6.12.2 Advanced Transmission Power Margin Notification (ATPMN) Report

The ATPMN MSL1 control element is identified by a MSL1 PDU subheader with FCID as specified in Table 4.58. It has a fixed size and consists of a single octet defined as follows (Figure 4.62):

- R: reserved bit, set to "0";
- Power Margin (PM): this field indicates the power margin level. The length of the field is 6 bits. The reported PM and the corresponding margin levels are shown in Table 4.24 below.

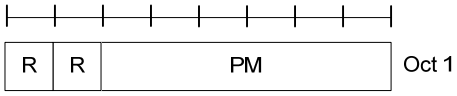

Figure 4.62: ATPMN MSL1 control element

Table 4.24: Power Margin Levels for ATPMN

PM	Power Margin Level
0	Power_Margin_0
1	Power_Margin_1
2	Power_Margin_2
3	Power_Margin_3
…	…
60	Power_Margin_60
61	Power_Margin_61
62	Power_Margin_62
63	Power_Margin_63

4.4.6.13 ANCH MCS Indicator (AMI)

There are two purposes to adopt AMI (ANCH MCS Indicator) field. One is adaptive modulation for ANCH/ECCH. ANCH/ECCH should select MCS that can send necessary and minimum volume of control information because the volume of control information depends on the MIMO method and system bandwidth.
MCS for ANCH/ECCH should be selected from BPSK 1/2 to QPAK 3/4. Another is link adaptation for ANCH/ICCH. MCS for ANCH/ICCH should be selected from BPSK 1/2 to 256QAM 7/8 because of throughput improvement when one PRU is assigned for a user. Table 4.25 shows applicative range of AMI.
When continuous transmission mode is selected, any information in retransmission data is not changed from the first data in order to soft-combine both signal field and data filed at received side.

Table 4.25 AMI Field

ID	AMI	Note
0	BPSK 1/2	ICCH/ECCH
1	BPSK 2/3	
2	QPSK 1/2	
3	QPSK 3/4	
4	Reserved	-
5	16QAM 1/2	ICCH only
6	16QAM 3/4	
7	64QAM 2/3	
8	64QAM 5/6	
9	256QAM 3/4	
10	256QAM 7/8	
11	Reserved	-
12		
13		
14		
15		

4.4.6.14 ANCH MCS Request (AMR)

AMR means ANCH MCS Request. AMR notifies maximum ANCH MCS which is judged from RSSI and SINR etc. AMI selects same MCS or smaller MCS compared with received AMR in case of ANCH/ICCH. Minimum MCS is selected to send the amount of control information in case of ANCH/ECCH. If CRC is error, AMR is not known. If HARQ is applied to ANCH/ICCH, AMR of HARQ frame is set at the same AMR as the initial frame to perform soft-combing at receive side. Table 4.26 shows AMR table.

Table 4.26 AMR Field

ID	AMR
0	BPSK 1/2
1	BPSK 2/3
2	QPSK 1/2
3	QPSK 3/4
4	Reserved
5	16QAM 1/2
6	16QAM 3/4
7	64QAM 2/3
8	64QAM 5/6
9	256QAM 3/4
10	256QAM 7/8
11	Reserved
12	
13	
14	
15	

4.4.6.15 MIMO type for EXCH (MT)

MT means MIMO type for EXCH. MT should be switched frame-by-frame. Table 4.27 shows information element of MT. MT must be selected from MIMO performance that is decided in negotiation phase. SISO (AAS) is chosen when “MIMO type is SDMA” and “number of stream is 1”.

Table 4.27 MT field

ID	MT
0	STBC
1	SM
2	SVD
3	SDMA

4.4.6.16 Stream Indicator for EXCH (SI)

SI means Stream Indicator for EXCH. The number of stream is 1 to 4.

Table 4.28 SI field

ID	SI
0	1
1	2
2	4
3	Reserved

4.4.6.17 MIMO type for EXCH (SR)

SR means Stream Request for EXCH. The number of stream is 1 to 4. This value and MR should be decided by RSSI, SINR etc.

Table 4.29 SR field

ID	SR
0	1
1	2
2	4
3	Reserved

4.4.6.18 Bandwidth Indicator for EXCH (BI)

BI means Bandwidth Indicator for EXCH. BI indicates range of applicative SCH bandwidth. BI lower 5bits "N_{LBI}" denotes initial number of applicative SCH bandwidth. BI upper 5bits "N_{UBI}" denotes last number of applicative SCH bandwidth.
Figure 4.63 shows concept of BI. In this example, ECB (Effective Channel Bandwidth) is 27MHz. The total number of SCH is 30 in this case. Center frequency fc is guard carrier of SCH16. Case

A shows that SCH9 to SCH13 are effective. Case B shows that SCH1 to SCH22 are effective. Number of effective SCH "N_{SCH}" is as follows,

$$N_{SCH} = (N_{UBI} - N_{LBI}) + 1$$

,where $N_{SCH} = 1, \ldots, N_{UBI}$, $N_{UBI} \geq N_{LBI}$

MAP, ACK, V should be calculated by "N_{SCH}". If AMR is low MCS, the amount of control information may be limited because AMI must be lower than MCS of AMR. In this example, BI should indicate the range of SCH that can select low ANCH MCS such as Case A.

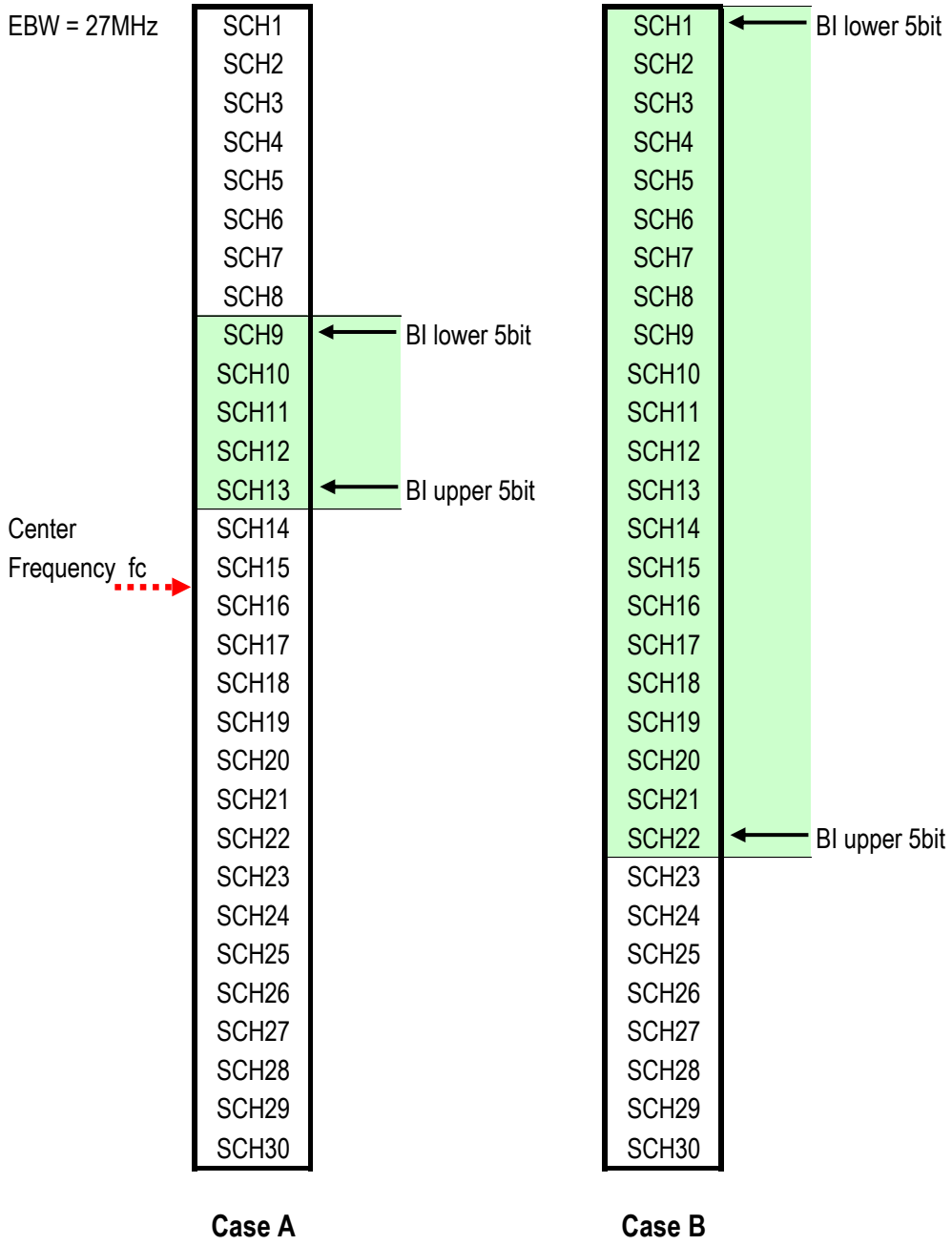

Figure 4.63 Concept of BI

4.4.7 PHY Control Layer for ADECCH

This section shows the information elements, e.g. the Advanced Downlink ECCH Control Information (ADECI) carried on ADECCH and explains each field in the ADECI. There are totally ten different formats for ADECI and the fields defined in the ADECI formats are described as below:

4.4.7.1 ADECI format 0

ADECI format 0 is used for scheduling of physical uplink data channel. The following information is transmitted by means of the ADECI format 0.

4.4.7.1.1 Flag for format0/format1A differentiation

It indicates the differentiation between format 0 and format 1A by 1 bit. Table 4.30 shows the values of this filed.

Table 4.30 Flag for Format0/Format1A Differentiation

Flag for Format0/Format1A Differentiation	Indication
0	ADECI format 0.
1	ADECI format 1A

4.4.7.1.2 Hopping flag

It indicates whether the MS shall perform AUEDCH frequency hopping by 1 bit. Table 4.31 shows the values of this field.

Table 4.31 Hopping Flag

Hopping Flag	Indication
0	AUEDCH frequency hopping
1	No AUEDCH frequency hopping

4.4.7.1.3 Resource unit assignment and hopping resource allocation

It indicates the resource allocation for AUEDCH and this field shall support to indicate the

resource allocation for different cases: AUEDCH frequency hopping or not..

4.4.7.1.4 Modulation and coding scheme and redundancy version

It indicates the modulation order (QPSK/16QAM/64QAM), transport block size and redundancy version by 5 bit.

4.4.7.1.5 Advanced New Data Indicator (ANDI)

ANDI is toggled for each new transport block by 1 bit. For example, if the ANDI is “0” for a transport block (invariance for intial and retransmission), in the next new transport block, the ANDI turns to the reverse state as “1”.

4.4.7.1.6 TPC command for scheduled AUEDCH

It impacts the power control for AUEDCH by 2 bit. Table 4.32 shows the values of this field.

Table 4.32 Mapping of TPC Command Field to Absolute and Accumulated Values*

TPC Command Field in ADECI format 0/3	Accumulated [dB]**	Absolute [dB] only ADECI format 0**
0	-1	-4
1	0	-1
2	1	1
3	3	4

*: This table also applies to ADECI format 3 (refer to section).

**: The meaning of this value is discussed in the power control part.

4.4.7.1.7 Cyclic shift for DM RS

It impacts the demodulation pilot for AUEDCH by 3 bits.

4.4.7.1.8 UL index

It applies to UL/DL slot configuration 0 for multiple uplink slot scheduling by 2 bits. Table 4.33 shows the values of this field.

Table 4.33 ULIndex

UL Iindex	Indication*
00	Reserved
10	Only the first uplink slot is scheduled
01	Only the second uplink slot is scheduled
11	Both the first and second slots are scheduled

* if ADECI format 0 is transmitted in slot n, the first/second uplink slot denotes a valid uplink slot n+x, where x is the first/second smallest value greater than or equal to 4.

4.4.7.1.9 Downlink assignment index for uplink control signaling

It indicates the total number of slots with ADEDCH transmissions by 2 bits.Table 4.34 shows the values of this field.

Table 4.34 Downlink Assignment Index for Uplink Control Signaling

DAI MSB, LSB	Value of DAI	Number of Slots with ADEDCH Transmission and with ADECCH Indicating DL Semi-persistent Scheduling Release
0,0	1	1 or 5 or 9
0,1	2	2 or 6
1,0	3	3 or 7
1,1	4	0 or 4 or 8

4.4.7.1.10 CQI request

It triggers whether MS shall perform aperiodic CQI/PMI/RI reporting or not. Table 4.35 shows the value of this field.

Table 4.35 CQI Request

CQI Request	Indication
0	Not performing aperiodic CQI/PMI/RI reporting
1	Performing aperiodic CQI/PMI/RI reporting

In addition, ADECI format 0 transmitted in the slot n indicates uplink scheulding information in the slot n+k, where k is shown in Table 4.36. Further, for UL/DL configuration 0, k can also be set to 7 if the condition as defined in this section is satisfied.

Table 4.36 value k

UL/DL Configuration	DL Slot Number n									
	0	1	2	3	4	5	6	7	8	9
0	4	6				4	6			
1		6			4		6			4
2				4					4	
3	7	7				7	7			5

4.4.7.2 ADECI format 1

ADECI format 1 carries DL scheduling information for SIMO with bitmap resource allocation indication. The following information is transmitted by means of the ADECI format 1.

4.4.7.2.1 Resource allocation header

It indicates whether resource allocation type 0 or type 1 applies for ADEDCH by 1 bit.. Table 4.37 shows the values of this filed.

Table 4.37 Resource Allocation Header

Resource Allocation Header	Indication
0	Resource allocation type 0
1	Resource allocation type 1

4.4.7.2.2 Resource unit assignment

It indicates the resource unit assignment for ADEDCH and shall support both the resource allocation for type 0 and type 1.

4.4.7.2.3 Modulation and coding scheme

It indicates the modulation order and transport block size for ADEDCH by 5 bits.

4.4.7.2.4 HARQ process number

It indicates the Hybrid-ARQ process number for ADEDCH by 4 bits.

4.4.7.2.5 ANDI

Refer to section 4.4.7.1.5.

4.4.7.2.6 Redundancy version

It indicates the redundancy version index for ADEDCH by 2 bits respectively corresponding to redundancy version 0/1/2/3.

4.4.7.2.7 TPC command for AUANCH

It impacts the transmission power of AUANCH with 2 bits. Table 4.38 shows the values of this filed.

Table 4.38 Mapping of TPC Command for AUANCH

TPC Command Field in ADECI format 1A/1B/1D/1/2A/2/3	Adiusted Power [dB]
0	-1
1	0
2	1
3	3

4.4.7.2.8 Downlink assignment index in downlink control signaling

It indicates the accumulative number of assigned ADEDCH transmission with corresponding ADECCH(s) up to the present slot transmitted to the corresponding MS within all the M slot(s) and applies for detection of missing DL grants for optional UL/DL slot configuration 1-3 by 2 bits.

4.4.7.3 ADECI format 1A

ADECI format 1A carries DL scheduling information for SIMO with compacted resource allocation indication and it shall support the transmission of the downlink paging, ATCCH response and dynamic ABCCH information scheduling. The following information is transmitted by means of the ADECI format 1A scrambling with C-MSID.

4.4.7.3.1 Flag for format0/format1A differentiation

Refer to section 4.4.7.1.1.

4.4.7.3.2 Localized/Distributed VRU assignment flag

It indicates whether localized virtual resource units or distributed virtual resource units are assigned for ADEDCH: value 0 indicates localized and value 1 indicates distributed VRU assignment.

4.4.7.3.3 Resource unit assignment

It indicates DL contiguous RUs assignment and shall support for Localized/Distributed VRU assignment.

4.4.7.3.4 Modulation and coding scheme

Refer to section 4.4.7.2.3.

4.4.7.3.5 HARQ process number

Refer to section 4.4.7.2.4.

4.4.7.3.6 ANDI

Refer to section 4.4.7.1.5.

4.4.7.3.7 Redundancy version

Refer to section 4.4.7.2.6.

4.4.7.3.8 TPC command for AUANCH

Refer to section 4.4.7.2.7.

4.4.7.3.9 Downlink Assignment Index for downlink control signaling

Refer to section 4.4.7.2.8.

In addition, the information elements “access sequence index for ATCCH (by 6 bits)” and “mask index for ATCCH (by 4 bits)” shall be supported in this ADECI format to support the transmission

of ATCCH.

4.4.7.4 ADECI format 1B

ADECI format 1B carries DL scheduling information for closed-loop signal-rank SU-MIMO with possibly contiguous resource allocation. The following information is transmitted by means of the ADECI format 1B.

4.4.7.4.1 Localized/Distributed VRU assignment flag

Refer to section 4.4.7.3.2.

4.4.7.4.2 Resource unit assignment

Refer to section 4.4.7.3.3.

4.4.7.4.3 Modulation and coding scheme

Refer to section 4.4.7.2.3.

4.4.7.4.4 HARQ process number

Refer to section 4.4.7.2.4.

4.4.7.4.5 ANDI

Refer to section 4.4.7.1.5.

4.4.7.4.6 Redundancy version

Refer to section 4.4.7.2.6.

4.4.7.4.7 TPC command for AUANCH

Refer to section 4.4.7.2.7.

4.4.7.4.8 Downlink Assignment Index for downlink control signaling

Refer to section 4.4.7.2.8.

4.4.7.4.9 TPMI information for precoding

It indicates the which codebook index is used for ADEDCH corresponding to the single-layer transmission. The number of this information bits are listed in Table 4.39.

Table 4.39 Number of Bits for TPMI Information

Number of Antenna Ports at BS	Number of Bits
2	2
4	4

4.4.7.4.10 PMI confirmation for precoding

It indicates whether the precoding is selected according to the latest PMI or the indicated TPMI.

4.4.7.5 ADECI format 1C

ADECI format 1C carries DL scheduling information for paging, ATCCH response and dynamic BCCH transmission in ADEDCH. The following information is transmitted by means of the ADECI format 1C.

4.4.7.5.1 Gap value

It indicates the gap value when the virtual resouce unit is mapping to the physical resouce unit by 1 bits.

4.4.7.5.2 Resource unit assignment

It indicates the resouce unit assignment according to the type 2 resource allocation for ADEDCH.

4.4.7.5.3 Transport block size index

It indicates the transport block size for the ADEDCH scrambled with SI-MSID, RA-MSID, P-MSID by 5 bits.

4.4.7.6 ADECI format 1D

ADECI format 1D carries DL scheduling information for MU-MIMO with compacted resource allocation indication. The following information is transmitted by means of the ADECI format 1D.

4.4.7.6.1 Localized/Distributed VRU assignment flag

Refer to section 4.4.7.3.2.

4.4.7.6.2 Resource unit assignment

Refer to section 4.4.7.3.3.

4.4.7.6.3 Modulation and coding scheme

Refer to section 4.4.7.2.3.

4.4.7.6.4 HARQ process number

Refer to section 4.4.7.2.4.

4.4.7.6.5 ANDI

Refer to section 4.4.7.1.5.

4.4.7.6.6 Redundancy version

Refer to section 4.4.7.2.6.

4.4.7.6.7 TPC command for AUANCH

Refer to section 4.4.7.2.7.

4.4.7.6.8 Downlink assignment index for DL control signaling

Refer to section 4.4.7.2.8.

4.4.7.6.9 TPMI information for precoding

Refer to section 4.4.7.4.9.

4.4.7.6.10 Downlink power offset

It indicates the downlink power offset value $\delta_{\text{power-offset}}$ used in power control for the multi-user MIMO transmission scheme of the ADEDCH by 1 bit . Table 4.40 shows the value of this field.

Table 4.40 Mapping of Downlink Power Offset Field in ADECI format 1D to the $\delta_{\text{power-offset}}$ Value

Downlink Power Offset Field	$\delta_{\text{power-offset}}$ [dB]
0	-10log10(2)
1	0

4.4.7.7 ADECI format 2

ADECI format 2 carries DL scheduling information for close loop SU-MIMO with bitmap resource allocation indication. The following information is transmitted by means of the ADECI format 2.

4.4.7.7.1 Resource allocation header

Refer to section 4.4.7.2.1.

4.4.7.7.2 Resource unit assignment

Refer to section 4.4.7.2.2.

4.4.7.7.3 TPC command for AUANCH

Refer to section 4.4.7.2.7.

4.4.7.7.4 Downlink assignment index for downlink control signaling

Refer to section 4.4.7.2.8.

4.4.7.7.5 HARQ process number

Refer to section 4.4.7.2.4.

4.4.7.7.6 Transport block to codeword swap flag

It indicates the transport block to codeword mapping by 1 bit when the two transport blocks are enabled. Table 4.41 shows the value of this field.

Table 4.41 Transport Block to Codeword Mapping (two transport blocks enabled)

Transport Block to Codeword Swap Flag Value	Codeword 0 (enabled)	Codeword 1 (enabled)
0	transport block 1	transport block 2
1	transport block 2	transport block 1

4.4.7.7.7 Modulation and coding scheme

Refer to section 4.4.7.2.3.

4.4.7.7.8 ANDI

Refer to section 4.4.7.1.5.

4.4.7.7.9 Redundancy version

Refer to section 4.4.7.2.6.

Notes that the previous three information (modulation and coding scheme, ANDI, redundancy version) shall support for the transport block 1 and 2.

4.4.7.7.10 Precoding information

It indicates the precoding information for ADECI format 2 by the certain bits as indicated in Table 4.42.

Table 4.42 Number of Bits for Precoding Information

Number of Antenna Ports at BS	Number of Bits for Precoding Information
2	3
4	6

4.4.7.8 ADECI format 2A

ADECI format 2A carries DL scheduling information for open loop SU-MIMO with bitmap resource allocation indication. The following information is transmitted by means of the ADECI format 2A.

4.4.7.8.1 Resource allocation header

Refer to section 4.4.7.2.1.

4.4.7.8.2 Resource unit assignment

Refer to section 4.4.7.2.2.

4.4.7.8.3 TPC command for AUANCH

Refer to section 4.4.7.2.7.

4.4.7.8.4 Downlink assignment index for downlink control signaling

Refer to section 4.4.7.2.8.

4.4.7.8.5 HARQ process number

Refer to section 4.4.7.2.4.

4.4.7.8.6 Transport block to codeword swap flag

Refer to section 4.4.7.7.6.

4.4.7.8.7 Modulation and coding scheme

Refer to section 4.4.7.2.3.

4.4.7.8.8 ANDI

Refer to section 4.4.7.1.5.

4.4.7.8.9 Redundancy version

Refer to section 4.4.7.2.6.

Notes that the previous three information (modulation and coding scheme, ANDI, redundancy version) shall support for the transport block 1 and 2.

4.4.7.8.10 Precoding information

It indicates the precoding information for ADECI format 2A by the certain bits as indicated in Table 4.43.

Table 4.43 Number of Bits for Precoding Information

Number of Antenna Ports at BS	Number of Bits for Precoding Information
2	0
4	2

4.4.7.9 ADECI format 3

ADECI format 3 carries TPC command of multiple users for UL power control (2 bits per user). The following information is transmitted by means of the ADECI format 3. Notes that the size of 3 should equal to ADECI format 0.

4.4.7.9.1 TPC command

It indicates the absolute and accumulated values for the AUANCH and AUEDCH power adjustment by 2 bits (refer to Section 4.4.7.1.6).

4.4.7.10 ADECI format 3A

ADECI format 3A carries TPC command of multiple users for UL power control (single bit per user). The following information is transmitted by means of the ADECI format 3A. Notes that the size of 3A should equal to ADECI format 1A.

4.4.7.10.1 TPC command

It indicates the values for the AUANCH and AUEDCH power adjustment by 1 bit . Table 4.44 shows the value of this field.

Table 4.44 Mapping of TPC Command Field in ADECI format 3A to δ_{PUSCH} Values

TPC Command Field in ADECI format 3A	Adjusted Power [dB]
0	-1
1	1

4.4.8 Summary of PHY Frame Format

Figure 4.64 and Figure 4.65 show all PHY frame formats.

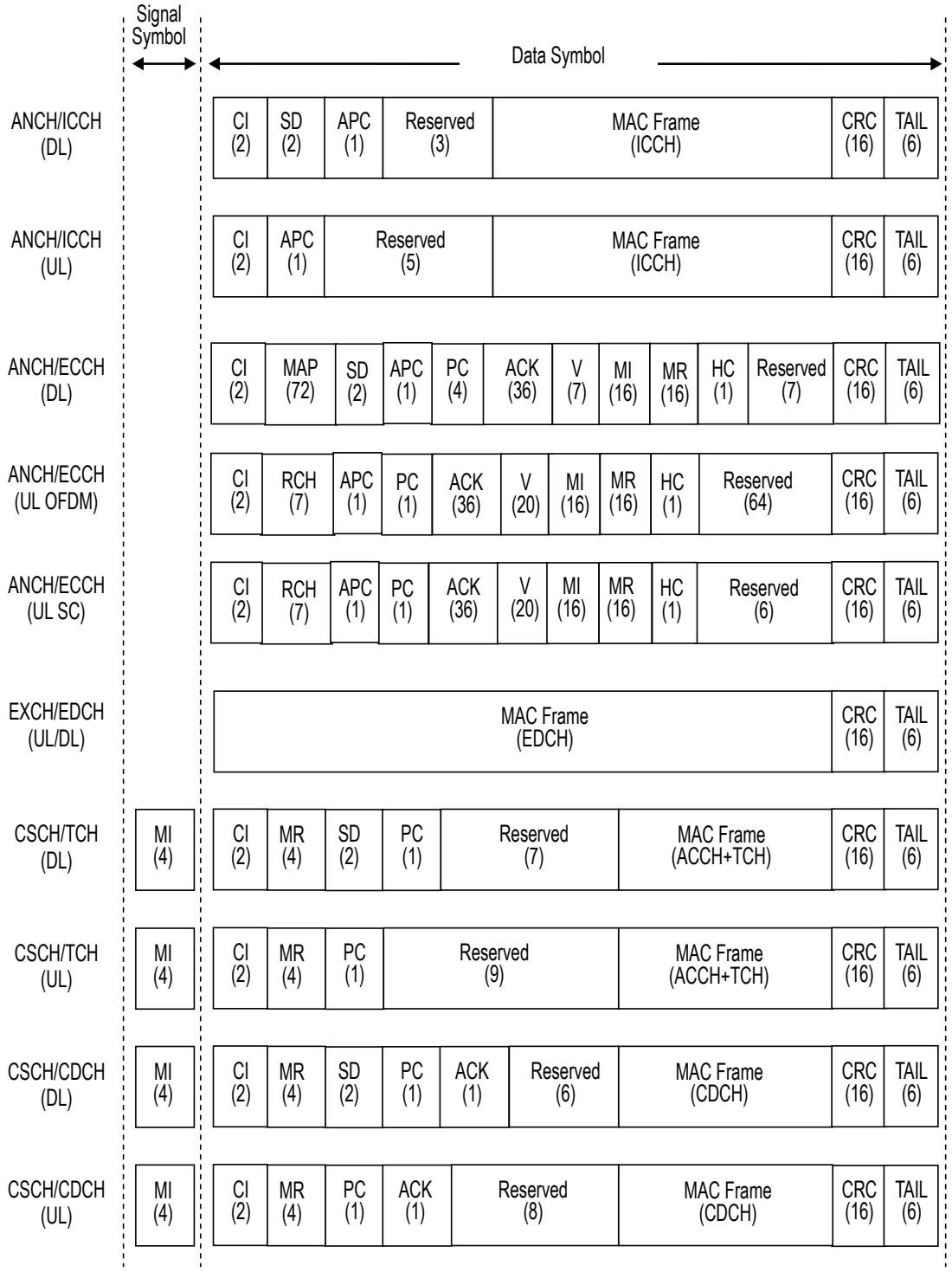

Figure 4.64 ICH PHY Frame Format for protocol version 1

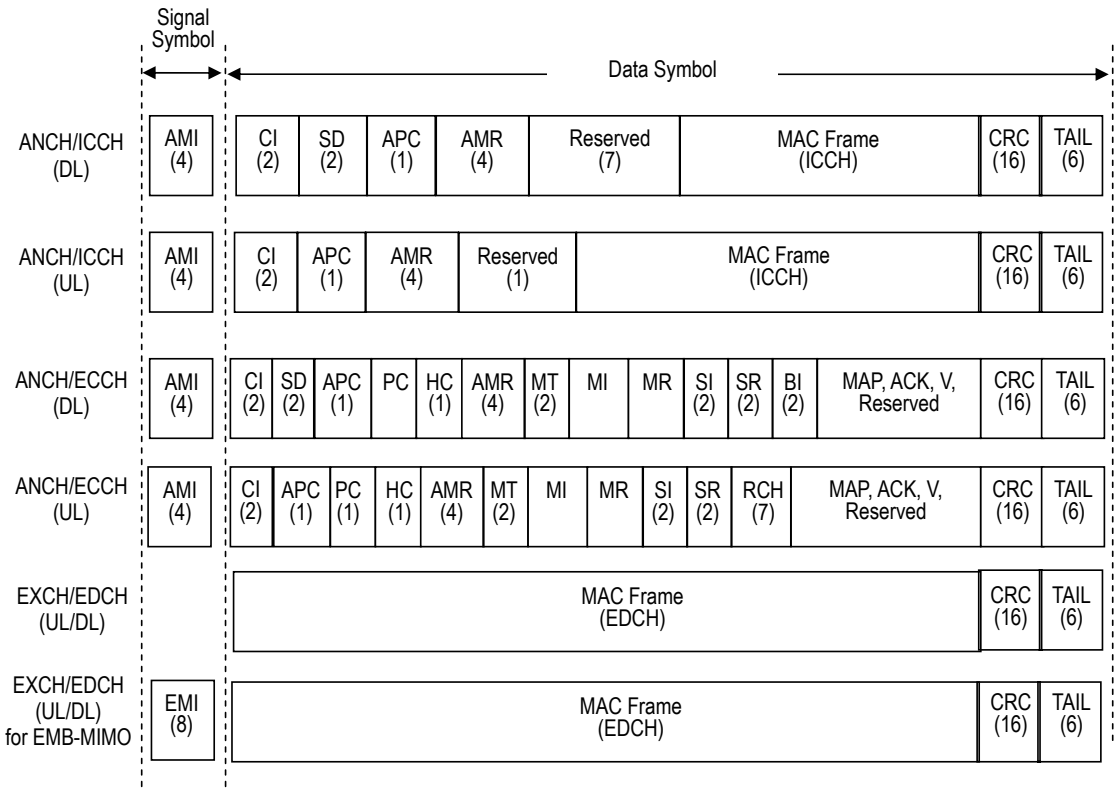

Figure 4.65 ICH PHY Frame Format for protocol version 2

4.5 MAC Layer Structure and Frame Format

4.5.1 Overview

4.5.1.1 Format Regulations

Figure 4.66 shows basic format regulations used for in this specification. The bit in single octet is horizontally aligned, and numbered from 1 to 8. Multiple octets are vertically aligned, and the numbered is put from 1 to n.

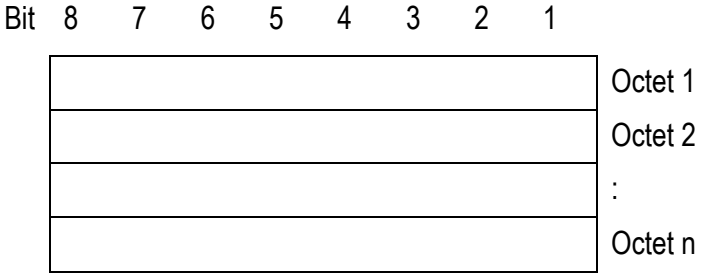

Figure 4.66 Format Regulations

The transmission is started from Bit 8 in Octet 1.
The format shown in Figure 4.67 is used when the list of a specific information types is in application. The bit row that shows each information is horizontally aligned.

Information Name Bit	8	7	6	5	4	3	2	1

Figure 4.67 Format that shows List of Information Type

The format shown in Table 4.45 is used to explain the meaning of an individual bit. The meaning of the specific bit of 0 or 1 is tabulated and shown.

Table 4.45 Format for Explanation of Bit

Bit 1	
0	
1	

4.5.1.2 MAC Frame Composition

Figure 4.68 shows the outline of MAC frame composition procedure. The figure gives an example of data transmission. Firstly, as much as possible upper layer data are combined. The data length, referred to as Ln, indicates each combined data when combination is performed. On the other hand, upper layer data exceeding PHY data unit size is fragmented. Then, sequence number N, which identifies each data transmission unit, is added. Finally, MAC header is to the MAC frames.

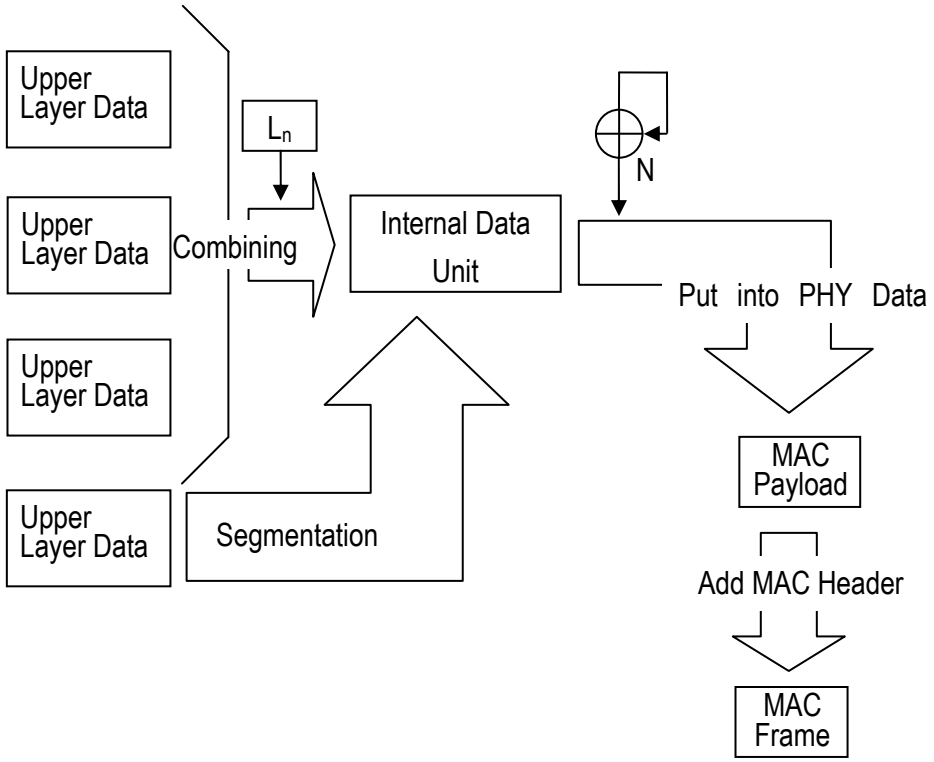

Figure 4.68 Procedure to Construct MAC Frame

At the reception side, upper layer data is reconstructed according to the MAC header.

4.5.2 MAC Frame Format

Figure 4.69 shows a general MAC frame structure and the order of bits and octets in the MAC frame. The MAC payload ends in byte boundary. The fraction bit of the PHY payload is PAD bit. PAD bits are from 0 bit to 7 bits. PAD is filled by 0. Transmission and reception are carried out from the upper bit. The first transmission and reception begin from the Octet 1.

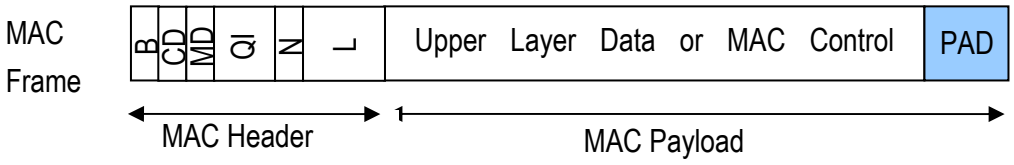

Figure 4.69 A General MAC Frame Structure (Included MAC Header)

According to the order of bits and octets that is described above, MAC frame composition is shown in Figure 4.70. Refer to Section 0 for detail.

Bit	8	7	6	5	4	3	2	1	
	B	CD		MD/F	QI				Octet 1
	E	N(MSB)							Octet 1a
	N(LSB)								Octet 1b
	E	L/IX (MSB)							Octet 2
	L/IX (LSB)								Octet 2a
	E	IX (MSB)							Octet 3
	IX (LSB)								Octet 3a
	Upper Layer Data, MAC Control Information								Octet 4…

Figure 4.70 Bit Order in MAC Frame

4.5.2.1 MAC Frame Structure

4.5.2.1.1 ICCH, EDCH and CDCH

Figure 4.71 shows the configuration of ICCH, EDCH, and CDCH. They contain a MAC header and MAC payloads.

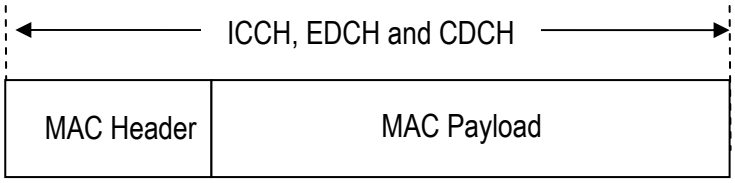

Figure 4.71 Configuration of ICCH, EDCH and CDCH

4.5.2.1.2 TCH

Figure 4.72 shows the configuration of TCH. TCH does not have a MAC header but contains voice data.

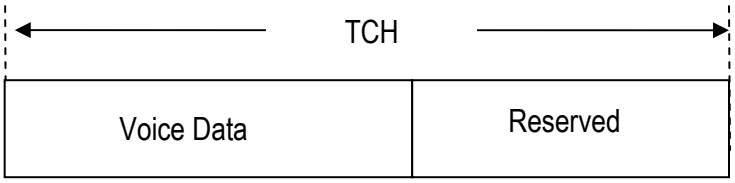

Figure 4.72 Configuration of TCH

4.5.2.1.3 ACCH

ACCH is an accompanying channel. Control messages on ACCH can be transmitted with user traffic simultaneously.

4.5.2.1.3.1 Frame Structure

Figure 4.73 shows the control message of ACCH, and its relation with Layer 2 frame.

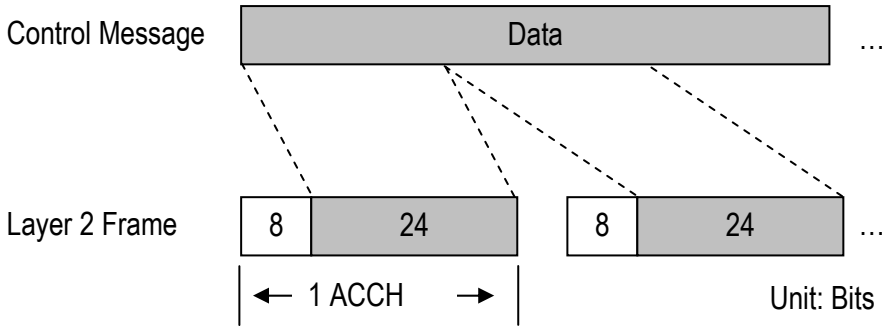

Figure 4.73 Relation between Control Message and Layer 2 Frame

4.5.2.1.3.2 ACCH Layer 2 Frame Signal Structure

8	7	6	5	4	3	2	1	
Reserved			C	RIL		IL		Octet 1
N								Octet 1a (C=1)
Information Field (Control Message)								Octet 2 (C=0)
E	MSB	Data Length 1						Octet 2 (C=1, IL=1x)
Data Length 2							LSB	Octet 2a (C=1, IL=1x)
Information Field (Control Message)								Octet 3
								Octet 4

Figure 4.74 Layer 2 Frame Signal Structure of ACCH

- Information Link Bit (IL)

Bit		Description
2	1	
0	0	Middle Frame
0	1	End Frame
1	0	Leading Frame
1	1	Undivided Frame

- Remaining Information Length Indication Bit (RIL)

Bit		Description
4	3	
0	0	Control Message length is no octet.(No message)
0	1	Control Message length is one octet.
1	0	Control Message length is two octets.
1	1	Control Message length is three octets.

- Control Message Bit (C)

Bit	Description
0	It indicates that the MAC payload is unnumbered control information.
1	It indicates that the MAC payload is numbered control information.

- Sequence Number (N)

When C=1, Sequence Number (N) is appended as Octet 1a. Following figure shows information element N.

Bit	8	7	6	5	4	3	2	1	
	N								Octet 1a

- Data Length

When IL=1x and C=1, Data Length is appended as Octet 2. Data Length field indicates MAC payload data length. It is shown by a byte unit. It can be expanded by using extension bit (E) depending on the value. Following figure shows information element Data Length. The bit E=0 if the value can be described within 7 bits. In this case, only the first octet (7 bits) is used, and the second octet is omitted. The bit E=1 if the value cannot be described 7 bits. In this case, two octets (15 bits) is used. Octet 2 shows upper 7 bits and Octet 2a shows lower 8 bits.

Bit 8	7	6	5	4	3	2	1	
E	MSB	Data Length 1						Octet 2
Data Length 2							LSB	Octet 2a

- Information Field

The message transferred on ACCH is considered QCS-ID=1.
When C=0, the message is stored in Octet 2~4. (3 Octets)

Bit 8	7	6	5	4	3	2	1	
Information Field								Octet 2
Information Field								Octet 3
Information Field								Octet 4

Otherwise, the message is stored in Octet 3~4. (2 Octets)

Bit 8	7	6	5	4	3	2	1	
Information Field								Octet 3
Information Field								Octet 4

4.5.2.2 MAC Header

There are four basic types of different MAC frame headers as shown below:
Header of the MAC frame which carries,

1. the first segment of the segmented (Refer to Section 4.5.3.1) data, or the unsegmented data. That is when B=1, and CD=x1. The case of combining (Refer to Section 4.5.3.3) is included in this type. (Refer to Figure 4.75).
2. the second or later segment of the segmented data, and its MAC frame length is the same as PHY payload length. That is when B=0, F=1, and CD=x1. (Refer to Figure 4.76).
3. the second or later segment of the segmented data, and its MAC frame length is shorter than the PHY payload length. That is when B=0, F=0, and CD=x1. (Refer to Figure 4.77).
4. unnumbered control information. That is when B=1 and CD=00. (Refer to Figure 4.78).

Details of each element in these figures are described in Section 4.5.2.2.1.

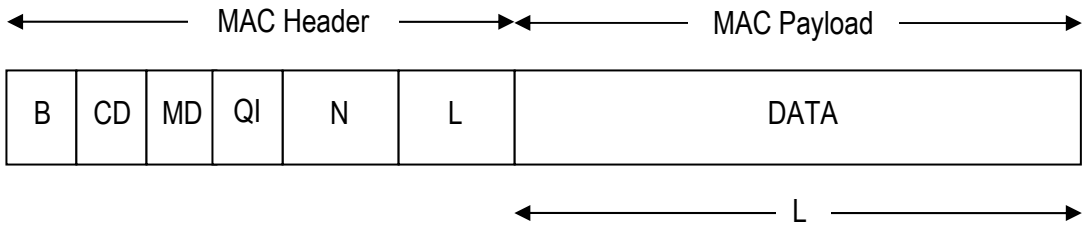

Figure 4.75 MAC Frame Format (1)

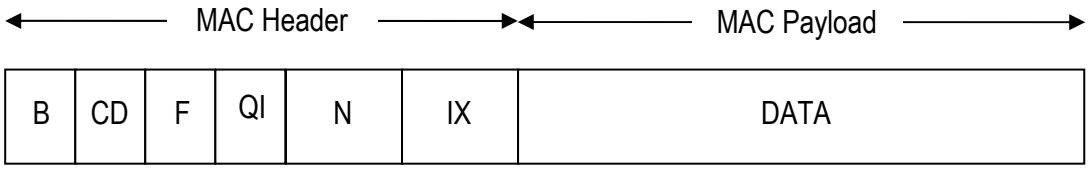

Figure 4.76 MAC Frame Format (2)

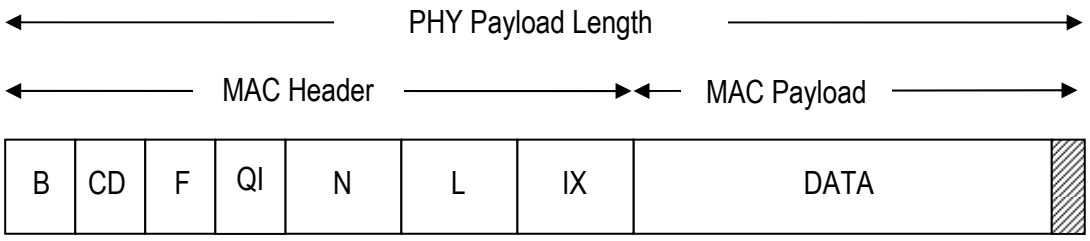

Figure 4.77 MAC Frame Format (3)

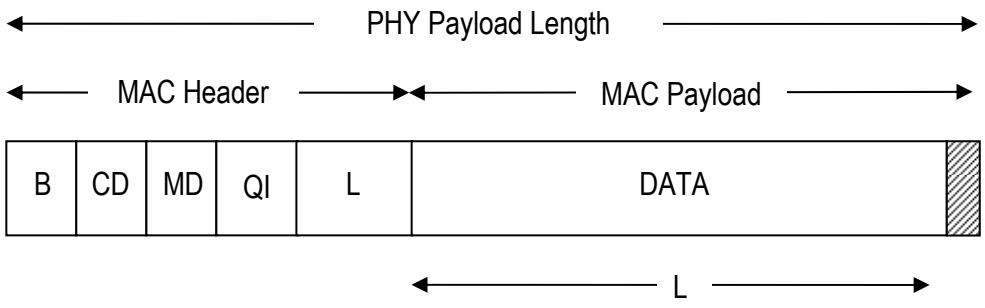

Figure 4.78 MAC Frame Format (4)

Table 4.46 shows the list of the information element included in the header of the MAC frame.

Table 4.46 Information Element List in MAC Header

Information Element Name	Sign	Information Length	Explanation
Frame Division Information	B	1 bit	It indicates the first frame of the set of divided segments or the frame of the second segments or later.
Identifier Control Information or Data	CD	2 bits	It identifies control information or data. It stands for the control information when the field is 00 or 01. It stands for the data when the field is 11. CD is referred by the MAC frame in case when B=1. CD does not have specific meaning in case when B=0.
Data Part Sharing	MD	1 bit	It indicates that the MAC payload contains single user data or multiple user data.
Identifier of the Payload Length	F	1 bit	It indicates that the data part length L equals to MAC payload length.
QCS-ID	QI	4 bits	It indicates the QCS-ID.
Sequence Number	N	8 or 16 bits	It indicates the sequence number.

Information Element Name	Sign	Information Length	Explanation
Index	IX	8 or 16 bits	It indicates the number of bytes of upper layer data that has already been sent in the earlier MAC frames. Basically, it indicates the location of the upper layer data that the MAC payload is filled up.
Data Part Length	L	8 or 16 bits	It indicates data length contained in the MAC payload in case when MD=0. It indicates the total number of data lengths contained in the MAC payload in case when MD=1.
Data Length of User	L_n	8 or 16 bits	It indicates each length of multiple user data when MD=1.
Information Area	DATA		Upper layer data is included in the MAC payload.

4.5.2.2.1 Each Field of MAC Header

4.5.2.2.1.1 Frame Division Information (B)

B field shows the first frame in data transmission by dividing upper layer data into two or more MAC frames. It is used to restructure the divided transmission data.

Table 4.47 Frame Division Information

Bit 1	
0	The second frame or later when the upper layer data is divided.
1	The first frame when the upper layer data is divided or undivided frame

4.5.2.2.1.2 Data Type (CD)

CD field indicates whether the control information or upper layer data is included in the MAC payload. CD is referred by the MAC frame in case when B=1. CD is invalid and shall be set zero in case when B=0.

Table 4.48 Data Type

Bit		Identification
2	1	
0	0	It indicates that the MAC payload is unnumbered control information.
0	1	It indicates that the MAC payload is numbered control information.
1	0	Reserved
1	1	It indicates that the MAC payload is upper layer data.

4.5.2.2.1.3 Data Part Sharing (MD)

An identifier shows whether the MAC payload is shared by multiple upper layer data. Table 4.49 shows the definition of the MD field.
This information element is omitted when B=0.

Table 4.49 Data Part Sharing

Bit 1	
0	Single upper layer data is included in a MAC payload.
1	Multiple upper layer data are included in a MAC payload.

4.5.2.2.1.4 Bit of Payload Length Identification (F)

An identifier indicates whether the MAC payload length is specified by L field or not, because the MAC frame length is the same as the PHY payload length. The bit definition of F field is as shown in Table 4.50.
This information element is omitted when B=1.

Table 4.50 Bit of Payload Surplus Judgment

Bit 1

0	The MAC payload is specified by L field.
1	Because PHY payload length is the same as the MAC frame length, the length of the MAC payload is not specified by L field.

4.5.2.2.1.5 QCS-ID (QI)

This number identifies the quality service sessions. QCS-ID is assigned for every session and managed between MS and BS. The length of this field is 4 bits. When control information which does not distinguish QCS is used, this value is set to 0 (QCS-ID=1). Otherwise it is set to any of the number from 1 to 15 to specify each QCS.

4.5.2.2.1.6 Sequence Number (N)

This is a series of continuous numbers to identify the data. N is supervised for each user and incremented by upper layer data unit or PHY data unit (CRC unit) for each QCS.
The area of index can be expanded by using extension bit (E) depending on the value. The bit E=0 if the value can be described within 7 bits. In this case, only the first octet (7 bits) is used, and the second octet is omitted. The bit E=1 if the value cannot be described within 7 bits. In this case, two octets (15 bits) is used. Octet 1a shows upper 7 bits and Octet 1b shows lower 8 bits.

Increment Timing

1. In case of combining (Refer to Section 4.5.3.3), N is incremented by PHY data unit.
2. In case of segmentation (Refer to Section 0), N is incremented by upper layer data unit.
3. In case of concatenation (Refer to Section 4.5.3.4), N is incremented by upper layer data unit.
4. In other cases than combining segmentation or concatenation, N is incremented by PHY data unit (= upper layer data unit).

Table 4.51 Relation CD Field and Sequence Number

CD Field	Sequence Number
Unnumbered Control Information	It is no sequence number. Octet 1a and 1b are omitted.
Numbered Control Information Upper Layer Data	Sequence number is 7 or 15 bits. Octet 1a and 1b are used.

4.5.2.2.1.7 Index (IX)

IX shows the numbers of the sent bytes from the beginning of the upper layer data. It also indicates the position of the upper layer data that this MAC payload is filled up.
The area of index can be expanded by using extension bit (E) depending on the value. Figure 4.79 shows information element IX, The bit E=0 if the value can be described within 7 bits. In this case, only the first octet (7 bits) is used, and the second octet is omitted. The bit E=1 if the value cannot be described within 7 bits. In this case, two octets (15 bits) is used. Octet 1 shows upper 7 bits and Octet 2 shows lower 8 bits.
This information element is omitted when B=1.

Bit 8	7	6	5	4	3	2	1	
E	INDEX 1							Octet 1
INDEX 2								Octet 2

Figure 4.79 Format of Index Field

Table 4.52 Explanation of the Extension Bit of Octet 1

Bit 8	
0	Octet 2 (INDEX 2) is omitted.
1	Octet 2 (INDEX 2) is used.

4.5.2.2.1.8 Data Part Length (L)

L field indicates data length contained in the MAC payload when MD=0. It indicates the total number of data lengths contained in the MAC payload when MD=1. The data part length is shown by a byte unit.
The area of data part length can be expanded by using extension bit (E) depending on the value. Figure 4.80 shows information element L. The bit E=0 if the value can be described within 7 bits.

In this case, only the first octet (7 bits) is used, and the second octet is omitted. The bit E=1 if the value cannot be described 7 bits. In this case, two octets (15 bits) is used. Octet 1 shows upper 7 bits and Octet 2 shows lower 8 bits.
This information element is omitted when F=1.

Bit 8	7 6 5 4 3 2 1	
E	Data Length 1	Octet 1
Data Length 2		Octet 2

Figure 4.80 Data Part Length / User Data Length

Table 4.53 Explanation of the Extension Bit of Octet 1

Bit 8	
0	Octet 2 (data length 2) is omitted.
1	Octet 2 (data length 2) is used.

4.5.2.2.1.9 User Data Length (Ln)

When one MAC payload includes upper layer data for multiple upper layer data, this information element shows each upper layer data length. The format of the element uses the same data part length. Refer to Figure 4.80 and Table 4.53. This information element is omitted when MD=0.

4.5.2.2.1.10 Information Area (DATA)

This is the dedicated data area for the MAC frame. It includes upper layer data, MAC control protocol and access establishment phase control protocol information.

4.5.2.3 MAC Payload

There are two types of MAC payload as shown below:

- Upper Layer Data
- MAC Control Information

4.5.2.3.1 Upper Layer Data

When CD field in MAC header is upper layer data, upper layer data is included in MAC payload.

4.5.2.3.2 MAC Control Information

When CD field in MAC header is either unnumbered MAC control information or numbered MAC control information, MAC control information is included in MAC payload.

Satisfying following conditions, leading 2 bytes of upper layer data indicates network layer protocol type.
(1) CD=01 (Numbered Control Information)
(2) QI is other than zero

When an upper layer data is segmented (Refer to section 4.5.3.1), the protocol type is only put on the first segment (Figure 4.81). This protocol type is a part of encrypted region.

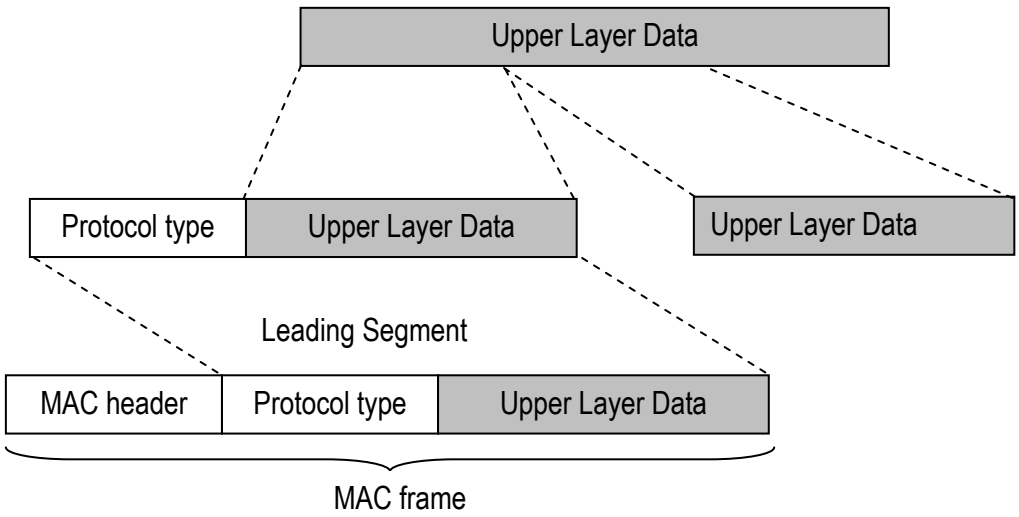

Figure 4.81 Relation between MAC Frame and Upper Layer Data with Protocol Type

4.5.3 Segmentation, Combining and Concatenation

4.5.3.1 Upper Layer Data Segmentation

Figure 4.82 shows the example, when the upper layer data which has data length of L bytes is segmented. In this example, the length of the last segment of the data segments is shorter than the PHY payload. At the reception side, data is reconstructed based on the information of L and IX.
The segmented data can be transmitted by not only single TDMA frame but also multiple TDMA frames.

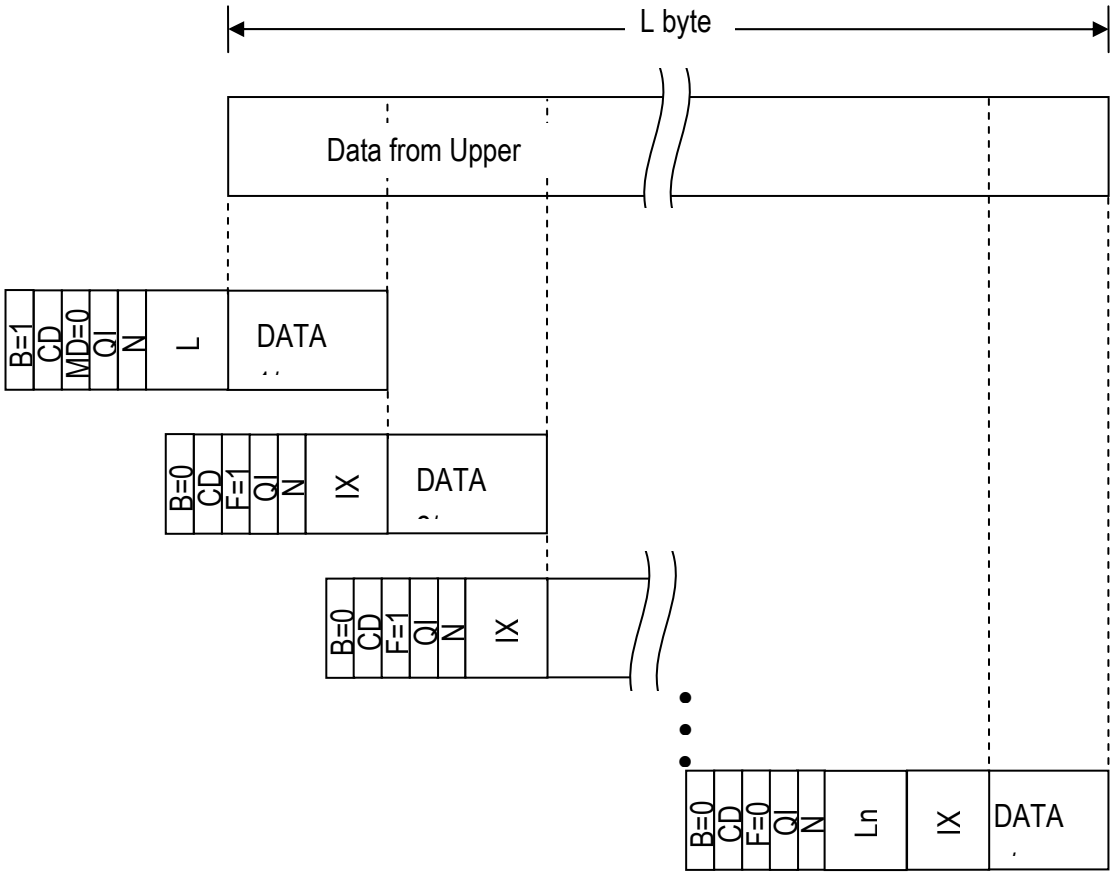

Figure 4.82 MAC Frame Segmentation

4.5.3.2 MAC Frame Segmentation in case of Retransmission

If the same bandwidth to precede retransmission cannot be allocated, this MAC frame will be segmented into multiple segments according to the allocated bandwidth for retransmission. N and MD of the retransmitted MAC frame use the same N and MD of the original MAC frame in the first segment. In the following segment(s), N will be the same and B will be set to 0.
Figure 4.83 shows the example of MAC retransmitting frame which is divided into two segments. In this example, frame length of the first segment of the MAC frame is the same as the PHY payload length. The length of the next segment of the MAC frame is shorter than the PHY payload length.
In case of Figure 4.83, the length of the second segmented frame is shorter than the PHY payload length, where F=0. IX shows the number of the data has already been sent from the head of the MAC payload to be retransmitted. IX=L_0 as shown in Figure 4.83 displays that MAC header is created by using the same rule, when the number of segmentation increases.

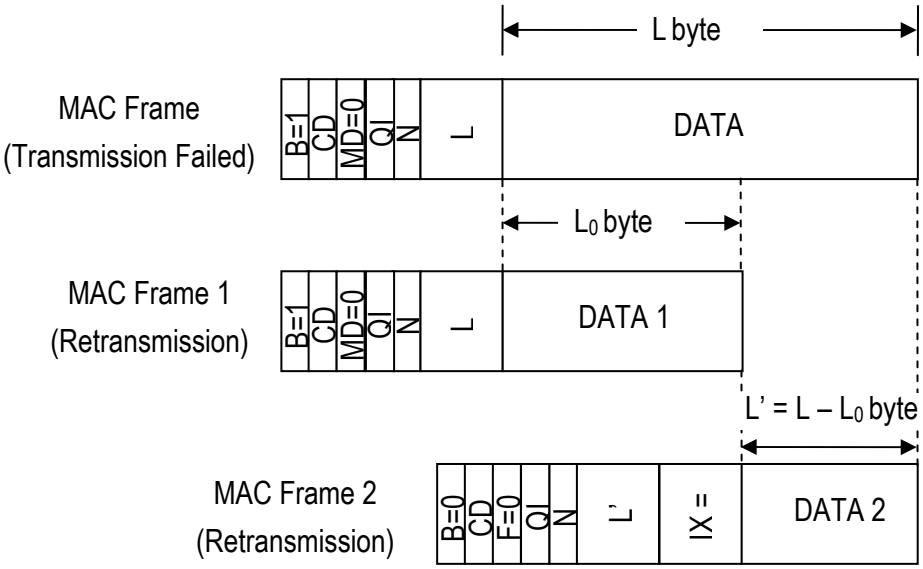

Figure 4.83 Data with MD=0 segmented in case of Retransmission

4.5.3.3 Combining Multiple Upper Layer Data into Single MAC Payload

Data length (L1, L2…) of each data is added respectively when MD=1 as shown in Figure 4.84 when multiple upper layer data shares one MAC payload. L is the sum of data length with all data included. L= $\sum_{x=1}^{n} L_x$ in this case.

The format $L' < \sum_{x=1}^{n} L_x$ will be applied when transmission carries forward to the N-th data.

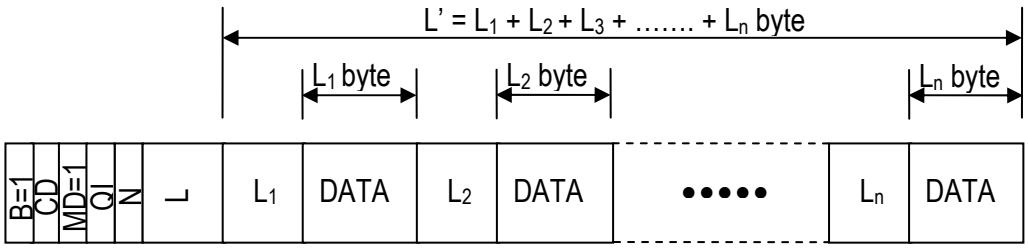

Figure 4.84 Combining Multiple Upper Layer Data into Single MAC Payload

When retransmission is performed, if the same bandwidth as preceding transmission cannot be allocated, this MAC frame will be segmented into multiple segments according to the allocated bandwidth for retransmission. Same N and MD of the MAC frame to be retransmitted will be used

in the first segment. And N will be the same in the following segment and B will be 0.
Figure 4.85 shows the example of retransmitting MAC frame containing multiple upper layer data divided into two segments. In this example, frame length of the first segment of the MAC frame is the same as the PHY payload length. Length of the second segment of the MAC frame is shorter than the PHY payload length.
In case of Figure 4.85, length of the second segmented frame is defined to be shorter than the PHY payload length. Hence, F=0. IX shows the number of data sent from the head of the MAC payload to be retransmitted. IX=L' as shown in Figure 4.85. MAC header is created using the same rule when the number of segmentation increases.
This feature is negotiated in information element Communication Parameter and MS Performance.

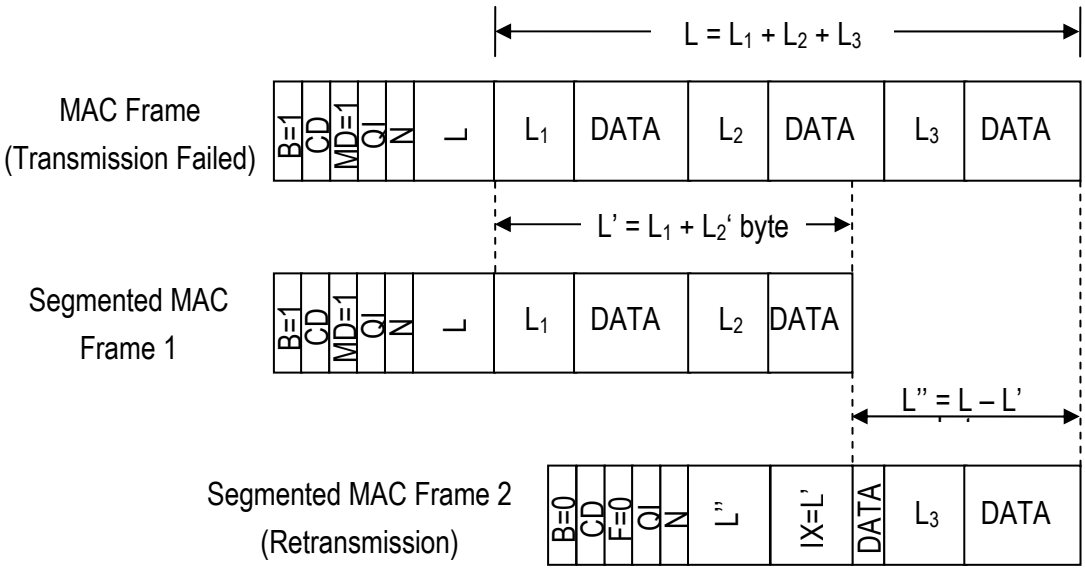

Figure 4.85 Data with MD=1 segmented in case of Retransmission

4.5.3.4 MAC Frame Concatenation

MAC frame concatenation is permitted with the following conditions. MAC frame concatenation here stands for multiple MAC frame to be included in a PHY data unit. Subsequent 24bits of last concatenated MAC frame are set to all 0. Satisfying following conditions, further MAC frame can be concatenated.

- PHY Payload Length – Current total MAC Frame Length ≥ 4 bytes
- Twenty-four leading bits of trailing MAC frame is not all zero.

Figure 4.86 shows an example when MAC frames are concatenated in a PHY payload. In the

example, 55 bytes upper layer data is followed by 150 bytes data. In a TDMA frame, PHY data unit can transmit 43 bytes data when MCS is BPSK-1/2. In first TDMA frame, 40 bytes segmented data can be transmitted. Then transmission of the rest of 15 bytes segmented data will be continued to next TDMA frame.
In the next TDMA frame, 24 bytes data can be transmitted in addition to the rest of 15 bytes segmented data, due to the fact that the difference between PHY payload length and first MAC frame length is bigger than 4 bytes. Other conditions are satisfied in the sample case.

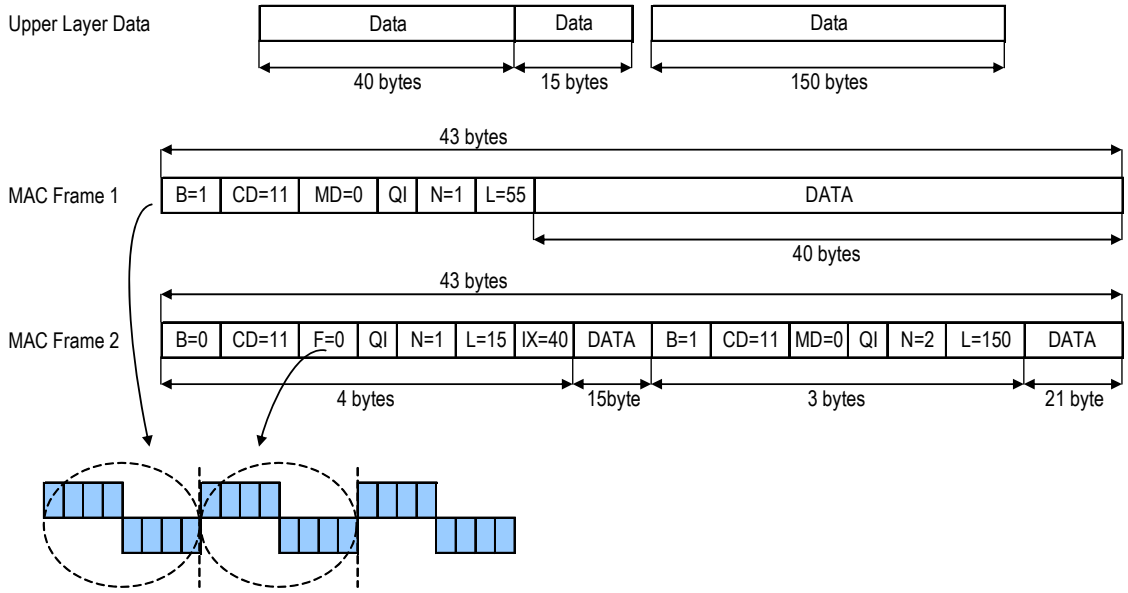

Figure 4.86 Example of MAC Frame Concatenation

4.5.4 Segmentation, Combining and Concatenation

The Segmentation, Combining and Concatenation function is handled in MSL2.

Figure 4.87 below depicts the MSL2 PDU structure where:

- The PDU sequence number carried by the MSL2 header is independent of the SDU sequence number (i.e. MAC-sublayer3 sequence number);
- A red dotted line indicates the occurrence of segmentation;
- Because segmentation only occurs when needed and concatenation is done in sequence, the content of an MSL2 PDU can generally be described by the following relations:
  - {0; 1} last segment of SDUi + [0; n] complete SDUs + {0; 1} first segment of SDUi+n+1 ; or
  - 1 segment of SDUi .

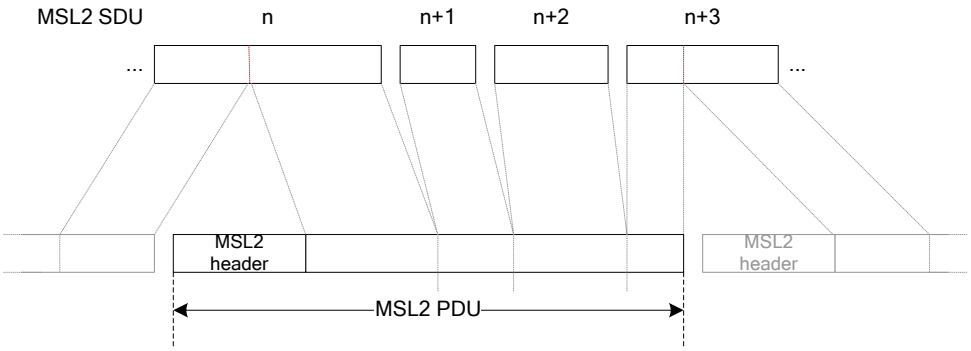

Figure 4.87: MSL2 PDU Structure

4.5.5 MAC Control Layer

The relationship among the MAC control information, MAC frame and the PHY frame is shown in Figure 4.88. At the beginning of the MAC payload, protocol identifier and the message type are included. The other control information can be added in the remaining fields.

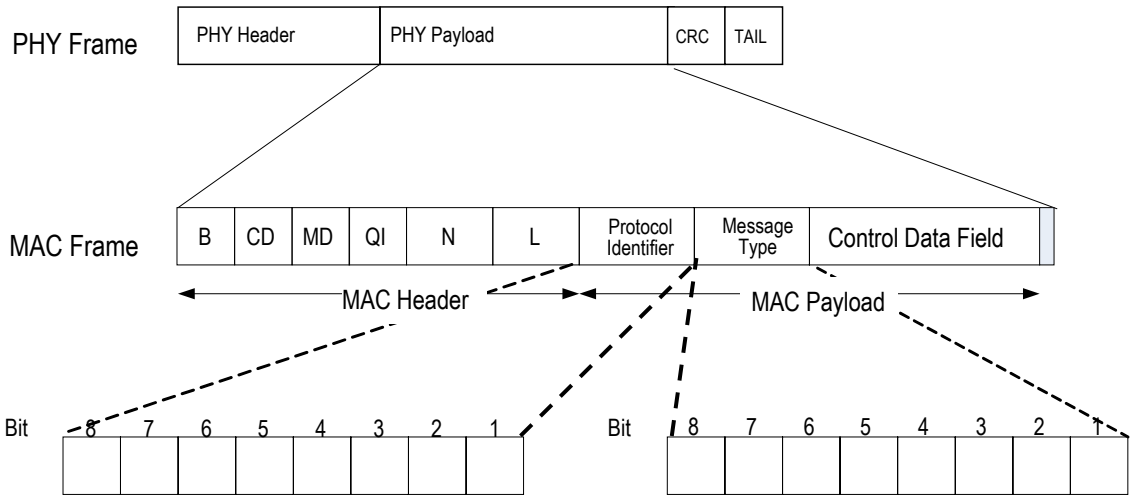

Figure 4.88 Relation among MAC Control Information, MAC Frame and PHY Frame

The MAC control and the access establishment phase control are performed by exchanging the messages in the MAC frame, which are described in this chapter. MAC control messages always include the protocol identifier and the message type. Other information elements can be added in time of need. Table 4.54 shows the protocol identifier that is used in the MAC layer.

Table 4.54 Protocol Identifier

Control Type	Protocol Identifier							
Bit	8	7	6	5	4	3	2	1
MAC Control	0	0	0	0	0	0	0	1
Access Establishment Phase Control	0	0	0	0	0	0	1	0

4.5.5.1 MAC Control Protocol

MAC control signals are defined in this section. The state of the reception side is informed to transmission side by transmitting the message described in this section.
The message provides MAC control signal in this paragraph. Because it is control information, CD of the MAC header is 00 or 01. Table 4.55 shows the list of the MAC control protocol messages.

Table 4.55 MAC Control Protocol Message List

Message Name	Message Type							
Bit	8	7	6	5	4	3	2	1
RR	P	0	0	0	0	0	0	1
RNR	P	0	0	0	0	0	1	0
SREJ	0	0	0	0	0	1	0	1
REJ	0	0	0	0	0	1	1	1
FRMR	0	0	0	0	0	1	0	0

4.5.5.1.1 Receive Ready (RR)

This message is used for reception confirmation of the received data and for the reception side to receive new data. This message includes sequence number N(R) that is to be received as N+1. Sequence number N(S), which indicates a sequence number that is to be sent, may be added to RR. When message length is between 4 to 6 octets, it includes N(S).
Both of N(R) and N(S) can be expanded by using extension bit (E) depending on the value. The bit E=0 if the value can be described within 7 bits. In this case, only the first octet (7 bits) is used, and the second octet is omitted. The bit E=1 if the value cannot be described within 7 bits. In this case, two octets (15 bits) is used. Octet 3a and 4a show upper 7 bits and Octet 3b and 4b show lower 8 bits.
RR has P (Poll) bit in its second octet. When transmission side requests RR to reception side as a reception confirmation, P=1 must be set. RR with P=1 should not be sent until RR with P=0 reception or T1 timer timeout. See section 4.5.5.2.3.1 for more details.
Figure 4.89 shows the RR message format.

Bit	8	7	6	5	4	3	2	1	
	Protocol Identifier: MAC Control Protocol								Octet 1
	0	0	0	0	0	0	0	1	
	Message Type: RR								Octet 2
	P	0	0	0	0	0	0	1	
	E	Sequence Number N(R) (MSB)							Octet 3a
	Sequence Number N(R) (LSB)								Octet 3b
	E	Sequence Number N(S) (MSB)							Octet 4a
	Sequence Number N(S) (LSB)								Octet 4b

Figure 4.89 RR Message Format

4.5.5.1.2 Receive Not Ready (RNR)

When the reception side cannot receive any data temporarily, then the reception side will inform the following message. It is impossible to receive any data by using this message. Sequence number N(R), which indicates a sequence number that is to be received, should be added to RNR. When message length is Between 4 to 6 octets, it includes N(S).
Both of N(R) and N(S) can be expanded by using extension bit (E) depending on the value. The bit E=0 if the value can be described within 7 bits. In this case, only the first octet (7 bits) is used, and the second octet is omitted. The bit E=1 if the value cannot be described within 7 bits. In this case, two octets (15 bits) is used. Octet 3a and 4a show upper 7 bits and Octet 3b and 4b show lower 8 bits.
RNR has P (Poll) bit in its second octet. RNR with P=1 is sent when a node which is in busy state confirms if RNR has reached to opposite node or not. Figure 4.90 shows the RNR message format.

Bit	8	7	6	5	4	3	2	1	
	Protocol Identifier: MAC Control Protocol								Octet 1
	0	0	0	0	0	0	0	1	
	Message Type: RNR								Octet 2
	P	0	0	0	0	0	1	0	
	E	Sequence Number N(R) (MSB)							Octet 3a
	Sequence Number N(R) (LSB)								Octet 3b
	E	Sequence Number N(S) (MSB)							Octet 4a
	Sequence Number N(S) (LSB)								Octet 4b

Figure 4.90 RNR Message Format

4.5.5.1.3 Frame Reject (FRMR)

Reception side notifies that the received frame is rejected because the reception side cannot receive the expected data. Figure 4.91 shows the FRMR message. Table 4.56 shows the list of rejected reasons.

Bit	8	7	6	5	4	3	2	1	
	Protocol Identifier: MAC Control Protocol								Octet 1
	0	0	0	0	0	0	0	1	
	Message Type: FRMR								Octet 2
	0	0	0	0	0	1	0	0	
	Reject Reason								Octet 3

Figure 4.91 FRMR Message Format

Table 4.56 Reject Reason List

Reject Reason	Reject Reason Field							
Bit	8	7	6	5	4	3	2	1
Undefined Protocol Identifier	0	0	0	0	0	0	0	1
Undefined Message Type	0	0	0	0	0	0	1	0
Undefined CD Field	0	0	0	0	0	0	1	1
Incorrect Data Part Length(L)	0	0	0	0	0	1	0	0
Incorrect Index(IX)	0	0	0	0	0	1	0	1
Incorrect Sequence Number(N)	0	0	0	0	0	1	1	0
Over the limit of retransmission times	0	0	0	0	0	1	1	1
Other Error	1	1	1	1	1	1	1	1

4.5.5.1.4 Selective Reject (SREJ)

SREJ message is sent when retransmission is requested to specify the sequence number. Figure 4.92 shows the SREJ message.
N(R) can be expanded by using extension bit (E) depending on the value. The bit E=0 if the value can be described within 7 bits. In this case, only the first octet (7 bits) is used, and the second octet is omitted. The bit E=1 if the value cannot be described within 7 bits. In this case, two octets (15 bits) is used. Octet 3a shows upper 7 bits and Octet 3b shows lower 8 bits.

Bit	8	7	6	5	4	3	2	1	
	Protocol Identifier: MAC Control Protocol								Octet 1
	0	0	0	0	0	0	0	1	
	Message Type: SREJ								Octet 2
	0	0	0	0	0	1	0	1	
	E	Sequence Number N(R) (MSB)							Octet 3a
	Sequence Number N(R) (LSB)								Octet 3b

Figure 4.92 SREJ Message Format

4.5.5.1.5 Reject (REJ)

This message is used to request the retransmission for the specified frame and the following frames after specified sequence number. Figure 4.93 shows the REJ message.
N(R) can be expanded by using extension bit (E) depending on the value. The bit E=0 if the value can be described within 7 bits. In this case, only the first octet (7 bits) is used, and the second octet is omitted. The bit E=1 if the value cannot be described within 7 bits. In this case, two octets (15 bits) is used. Octet 3a shows upper 7 bits and Octet 3b shows lower 8 bits.

Bit	8	7	6	5	4	3	2	1	
	Protocol Identifier: MAC Control Protocol								Octet 1
	0	0	0	0	0	0	0	1	
	Message Type: REJ								Octet 2
	0	0	0	0	0	1	1	1	
	E	Sequence Number N(R) (MSB)							Octet 3a
	Sequence Number N(R) (LSB)								Octet 3b

Figure 4.93 REJ Message Format

4.5.5.2 Control Operation Elements

4.5.5.2.1 Poll bit

RR and RNR have a poll bit (called “P bit”). The P bit provides the following function. P bit set at “1” is used by the data link layer entity to poll the response frame from its peer’s data link layer entity.

4.5.5.2.2 Variables

4.5.5.2.2.1 The range of a sequence number and variable

The range of a sequence number and variable described in this section is from 0 to 32767. The value wraps around within this range. Because sequence number N field in MAC header length is 15 bits including expanded octet, a maximum sequence number is a modulo value of 32768.

4.5.5.2.2.2 Send state variable V(S)

Data link layer entity has a send state variable V(S). V(S) indicates the sequence number that should be transmitted next. V(S) is increased by one for each numbered frame transmission. However, V(S) must not exceed the value of adding the maximum number of window size to V(A).

4.5.5.2.2.3 Acknowledge state variable V(A)

Data link layer entity has an acknowledge state variable V(A). V(A) indicates the sequence number that should be acknowledged next by its peer. (V(A)-1 is equal to N(S) of the numbered frame acknowledged last.) The value of V(A) is updated by the correct N(R) value acknowledged by the RR/RNR frame transmitted from its peer. The correct N(R) value is in the range of V(A)≤N(R)≤V(S).

4.5.5.2.2.4 Send sequence number N(S)

Numbered frame have a send sequence number, N(S) indicates the sequence number of transmitted frame. N(S) is set to V(S) prior to transmission of numbered frame(s).

4.5.5.2.2.5 Receive state variable V(R)

The data link layer entity has a receive state variable V(R). V(R) indicates the sequence number of the numbered frame that should be received next. V(R) is set at the newest sequence number added by 1 which can be continuously received by starting from current V(R).

4.5.5.2.2.6 Receive sequence number N(R)

RR/RNR frames have receive sequence numbers for data frames that should be received next. Prior to RR/RNR frame transmission, N(R) is set so that it becomes equal to the newest V(R). N(R) indicates the data link layer entity which sent such N(R) correctly received all data frames having numbers up to N(R)-1.

4.5.5.2.3 Timers

4.5.5.2.3.1 Response acknowledge timer T1

T1 timer starts when RR/RNR frame with P=1 was received, and stops when receiving its

response frame or REJ/SREJ frame. When the data link layer entity detects T1 timer's time-out retry out, it sends FRMR frame.

4.5.5.2.3.2 Response transfer timer T2

T2 timer is used to delay sending RR/RNR frame for receiving normal numbered frame. When T2 timer stopped and the data link layer entity receives numbered frame, it starts T2 timer. When T2 timer expires, the data link layer entity sends RR/RNR response frame with P=0. When T2 timer is active, although it receives numbered frame, T2 timer goes on. When it receives command frame with P=1, T2 timer is stopped.

4.5.5.2.3.3 Peer station busy supervisory timer T3

T3 is the timer to supervise the busy state of opposite side. When the data link layer entity receives RNR frame, T3 timer is started. When T3 timer expires, the data link layer entity send RR/RNR frame in order to check peer state. While T3 timer is in active, if the data link layer entity receives RNR frame then restarts T3 timer, if it receives RR frame then stops T3 timer.

4.5.5.2.3.4 Link alive check timer T4

Satisfying one or more following conditions, the data link layer entity starts T4 timer.
- No data to send
- Outstanding
- My station is busy and outstanding
- Receive RR/REJ/SREJ when the data link layer entity has no data to send

Satisfying one or more following conditions, the data link layer entity stops T4 timer.
- V(S) equals to N(R) in received RR frame
- Receive newer numbered frame except for retransmission
- Start T3 timer

When T4 time out occurs, the data link layer entity sends RR/RNR frames.
When the data link layer entity detects T4 timer's time-out retry out, it sends FRMR frame.

4.5.5.3 Access Establishment Phase Control Protocol

Refer to Chapter 7.

4.6 Optional MAC Layer Structure and sub-layer

4.6.1 Overview

MAC layer is composed of sublaye 1, sublaye 2 and sublaye 3.

4.6.2 MAC sub-layer1 (MSL1)

The main services and functions of the MSL1 include:

- Mapping between function channels and transport channels;
- Multiplexing/demultiplexing of MSL1 SDUs belonging to one or different function channels into/from transport blocks (TB) delivered to/from the physical layer on transport channels;
- scheduling information reporting;
- Error correction through HARQ;
- Priority handling between function channels of one MS;
- Priority handling between MSs by means of dynamic scheduling;
- Transport format selection;
- Padding.

A MSL1 consists of a MSL1 header, zero or more MSL1 Service Data Units (MSL1 SDU), zero, or more MSL1 control elements, and optionally padding.

A MSL1 PDU header consists of one or more MSL1 PDU subheaders; each subheader corresponds to either a MSL1 SDU, a MSL1 control element or padding.

A MSL1 PDU subheader consists of the six header fields R/R/E/FCID/F/L but for the last subheader in the MSL1 PDU and for fixed sized MSL1 control elements. The last subheader in the MSL1 PDU and subheaders for fixed sized MSL1 control elements consist solely of the four header fields R/R/E/FCID. A MSL1 PDU subheader corresponding to padding consists of the four header fields R/R/E/FCID.

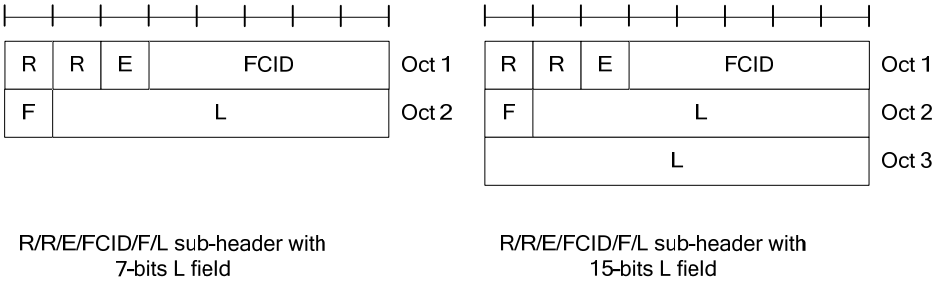

Figure 4.94: R/R/E/FCID/F/L MSL1 subheader

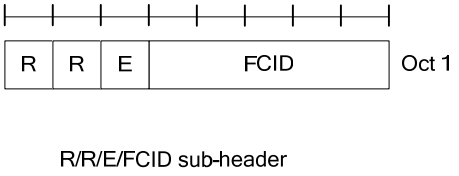

Figure 4.95: R/R/E/FCID MSL1 subheader

The MSL1 header consists of the following fields:

- FCID: The function Channel ID field identifies the function channel instance of the corresponding MSL1 SDU or the type of the corresponding MSL1 control element or padding.
- L: The Length field indicates the length of the corresponding MSL1 SDU.The size of the L field is indicated by the F field;
- F: The Format field indicates the size of the Length field as indicated in Table 4.59. The size of the F field is 1 bit. If the size of the MSL1 SDU is less than 128 bytes, the value of the F field is set to 0, otherwise it is set to 1;
- E: The Extension field is a flag indicating if more fields are present in the MSL1 header or not. The E field is set to "1" to indicate another set of at least R/R/E/FCID fields. The E field is set to "0" to indicate that either a MSL1 SDU, a MSL1 control element or padding starts at the next byte;
- R: Reserved bit, set to "0".

The MSL1 header and subheaders are octet aligned.

Table 4.57 Values of FCID for ADSCH

Index	FCID Values
00000	ACCCH
00001-01010	Identity of the function channel
01011-11011	Reserved
11111	Padding

Table 4.58 Values of FCID for AUSCH

Index	FCID Values
00000	ACCCH
00001-01010	Identity of the function channel
01011-11001	Reserved
11010	Advanced Transmission Power Margin Notification Report
11011	C-MSID
11100	Truncated UL Data Size Notification
11101	Short UL Data Size Notification
11110	Long UL Data Size Notification
11111	Padding

Table 4.59 Values of F field:

Index	Size of Length field (in bits)
0	7
1	15

4.6.3 MAC sub-layer2 (MSL2)

MSL2 includs three kinds PDU, TMD PDU, UMD PDU and AMD PDU.
The main services and functions of the MSL2 include:

- Transfer of upper layer PDUs;
- Error Correction through ARQ (only for AM data transfer);
- Concatenation, segmentation and reassembly of MSL2 SDUs (only for UM and AM data transfer);
- Re-segmentation of MSL2 data PDUs (only for AM data transfer);
- Reordering of MSL2data PDUs (only for UM and AM data transfer);
- Duplicate detection (only for UM and AM data transfer);
- Protocol error detection (only for AM data transfer);
- MSL2 SDU discard (only for UM and AM data transfer);

4.6.3.1 TMD PDU

TMD PDU consists only of a Data field and does not consist of any MSL2 headers.

4.6.3.2 UMD PDU

UMD PDU consists of a Data field and an UMD PDU header.
UMD PDU header consists of a fixed part (fields that are present for every UMD PDU) and an extension part (fields that are present for an UMD PDU when necessary). The fixed part of the UMD PDU header itself is byte aligned and consists of a FI, an E and a SN. The extension part of the UMD PDU header itself is byte aligned and consists of E(s) and LI(s).
An UM MSL2 entity is configured by high layer to use either a 5 bit SN or a 10 bit SN. When the 5 bit SN is configured, the length of the fixed part of the UMD PDU header is one byte. When the 10 bit SN is configured, the fixed part of the UMD PDU header is identical to the fixed part of the AMD PDU header, except for D/C, RF and P fields all being replaced with R1 fields. The extension part of the UMD PDU header is identical to the extension part of the AMD PDU header (regardless of the configured SN size).

An UMD PDU header consists of an extension part only when more than one Data field elements are present in the UMD PDU, in which case an E and a LI are present for every Data field element except the last. Furthermore, when an UMD PDU header consists of an odd number of LI(s), four padding bits follow after the last LI.

4.6.3.3 AMD PDU

AMD PDU is a kind of PDU of MSL2 and consists of a Data field and an AMD PDU header.
AMD PDU header consists of a fixed part (fields that are present for every AMD PDU) and an extension part (fields that are present for an AMD PDU when necessary). The fixed part of the AMD PDU header itself is byte aligned and consists of a D/C, a RF, a P, a FI, an E and a SN. The extension part of the AMD PDU header itself is byte aligned and consists of E(s) and LI(s).

An AMD PDU header consists of an extension part only when more than one Data field elements are present in the AMD PDU, in which case an E and a LI are present for every Data field element except the last. Furthermore, when an AMD PDU header consists of an odd number of LI(s), four padding bits follow after the last LI.

4.6.3.4 AMD PDU segment

AMD PDU segment consists of a Data field and an AMD PDU segment header.
AMD PDU segment header consists of a fixed part (fields that are present for every AMD PDU segment) and an extension part (fields that are present for an AMD PDU segment when necessary). The fixed part of the AMD PDU segment header itself is byte aligned and consists of a D/C, a RF, a P, a FI, an E, a SN, a LSF and a SO. The extension part of the AMD PDU segment header itself is byte aligned and consists of E(s) and LI(s).

An AMD PDU segment header consists of an extension part only when more than one Data field elements are present in the AMD PDU segment, in which case an E and a LI are present for every Data field element except the last. Furthermore, when an AMD PDU segment header consists of an odd number of LI(s), four padding bits follow after the last LI.

4.6.3.5 State variables parameter and timers

All state variables and all counters are non-negative integers.
All state variables related to AM data transfer can take values from 0 to 1023.

The transmitting side of each AM MSL2 entity shall maintain the following state variables:
a) VT(A) – Acknowledgement state variable
This state variable holds the value of the SN of the next AMD PDU for which a positive acknowledgment is to be received in-sequence, and it serves as the lower edge of the transmitting window. It is initially set to 0, and is updated whenever the AM MSL2 entity receives a positive acknowledgment for an AMD PDU with SN = VT(A).
b) VT(MS) – Maximum send state variable

This state variable equals VT(A) + AM_Window_Size, and it serves as the higher edge of the transmitting window.

c) VT(S) – Send state variable

This state variable holds the value of the SN to be assigned for the next newly generated AMD PDU. It is initially set to 0, and is updated whenever the AM MSL2 entity delivers an AMD PDU with SN = VT(S).

d) POLL_SN – Poll send state variable

This state variable holds the value of VT(S)-1 upon the most recent transmission of a MSL2 data PDU with the poll bit set to “1”. It is initially set to 0.

The transmitting side of each AM MSL2 entity shall maintain the following counters:

a) PDU_WITHOUT_POLL – Counter

This counter is initially set to 0. It counts the number of AMD PDUs sent since the most recent poll bit was transmitted.

b) BYTE_WITHOUT_POLL – Counter

This counter is initially set to 0. It counts the number of data bytes sent since the most recent poll bit was transmitted.

c) RETX_COUNT – Counter

This counter counts the number of retransmissions of an AMD PDU (see subclause 5.2.1). There is one RETX_COUNT counter per PDU that needs to be retransmitted.

The receiving side of each AM MSL2 entity shall maintain the following state variables:

a) VR(R) – Receive state variable

This state variable holds the value of the SN following the last in-sequence completely received AMD PDU, and it serves as the lower edge of the receiving window. It is initially set to 0, and is updated whenever the AM MSL2 entity receives an AMD PDU with SN = VR(R).

b) VR(MR) – Maximum acceptable receive state variable

This state variable equals VR(R) + AM_Window_Size, and it holds the value of the SN of the first AMD PDU that is beyond the receiving window and serves as the higher edge of the receiving window.

c) VR(X) – t-Reordering state variable

This state variable holds the value of the SN following the SN of the MSL2 data PDU which triggered t-Reordering..

d) VR(MS) – Maximum STATUS transmit state variable

This state variable holds the highest possible value of the SN which can be indicated by “ACK_SN” when a STATUS PDU needs to be constructed. It is initially set to 0.

e) VR(H) – Highest received state variable

This state variable holds the value of the SN following the SN of the MSL2 data PDU with the highest SN among received MSL2 data PDUs. It is initially set to 0.

The receiving side of each AM MSL2 entity shall maintain the following constant:

a) AM_Window_Size

This constant is used by both the transmitting side and the receiving side of each AM MSL2 entity to calculate VT(MS) from VT(A), and VR(MR) from VR(R). AM_Window_Size = 512.

The receiving side of each AM MSL2 entity shall maintain the following timers:

a) t-PollRetransmit

This timer is used by the transmitting side of an AM MSL2 entity in order to retransmit a poll

b) t-Reordering

This timer is used by the receiving side of an AM MSL2 entity and receiving UM MSL2 entity in order to detect loss of MSL2 PDUs at lower layer. If t-Reordering is running, t-Reordering shall not be started additionally, i.e. only one t-Reordering per MSL2 entity is running at a given time.

c) t-StatusProhibit

This timer is used by the receiving side of an AM MSL2 entity in order to prohibit transmission of a STATUS PDU.

4.6.4 MAC sublayer 3 (MSL3)

4.6.4.1 Overview

This subclause provides an overview on services, functions and PDU structure provided by the MSL 3 sublayer.

The main services and functions of the MSL 3 sublayer for the user plane include:

- Header compression and decompression: ROHC only;
- Transfer of user data;
- In-sequence delivery of upper layer PDUs at MSL 3 re-establishment procedure for MSL 2 AM;
- Duplicate detection of lower layer SDUs at MSL 3 re-establishment procedure for MSL 2 AM;
- Retransmission of MSL 3 SDUs at handover for MSL 2 AM;
- Ciphering and deciphering;
- Timer-based SDU chuck in uplink.

The main services and functions of the MSL 3 for the control plane include:

- Ciphering and Integrity Protection;
- Transfer of control plane data.

4.6.4.2 UL Data Transfer Procedures

At reception of a MSL 3 SDU from upper layers, the MS shall:
- start the chuck Timer associated with this MSL 3 SDU (if configured);

For a MSL 3 SDU received from upper layers, the MS shall:
- associate the MSL 3 SN corresponding to Next_MSL 3_TX_SN to this MSL 3 SDU;
- perform header compression of the MSL 3 SDU;
- perform integrity protection (if needed), and ciphering (if needed) using COUNT based on TX_HFN and the MSL 3 SN associated with this MSL 3 SDU respectively;
- increment Next_MSL 3_TX_SN by one;
- if Next_MSL 3_TX_SN > Maximum_MSL 3_SN:
- set Next_MSL 3_TX_SN to 0;
- increment TX_HFN by one;
- submit the resulting MSL 3 Data PDU to lower layer.

4.6.4.3 DL Data Transfer Procedures

- chuck the MSL 3 Data PDUs that are received from lower layers due to the re-establishment of the lower layers;
- process the MSL 3 Data PDUs that are received from lower layers due to the re-establishment of the lower layers, for both AM and UM;
- reset the header compression protocol for downlink (if configured) , for both AM and UM;
- set Next_ MSL 3_RX_SN, and RX_HFN to 0;
- chuck all stored MSL 3 SDUs and MSL 3 PDUs;
- apply the ciphering algorithm and key provided by upper layers during the re-establishment procedure.

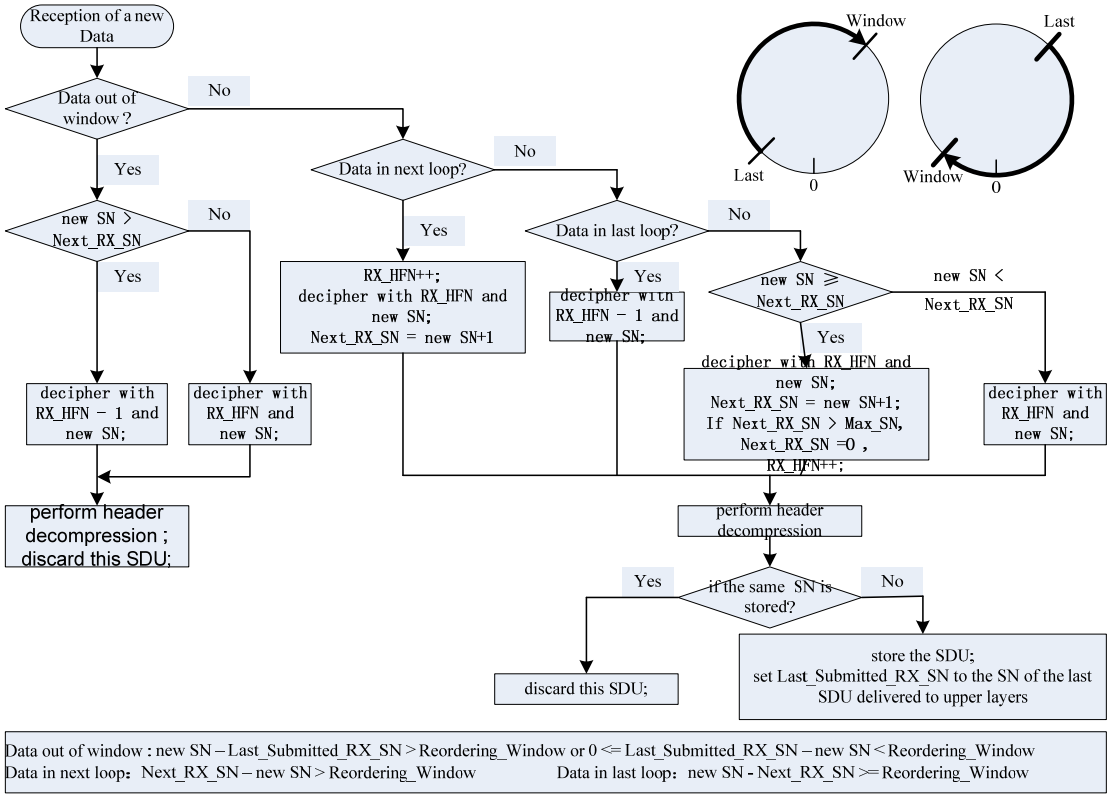

Figure 4.96 DL Data Transfer Procedures

4.6.4.4 MSL 3 chuck

When the chuckTimer expires for a MSL 3 SDU, or the successful delivery of a MSL 3 SDU is confirmed by MSL 3 status report, the MS shall chuck the MSL 3 SDU along with the corresponding MSL 3 PDU. If the corresponding MSL 3 PDU has already been submitted to lower layers the chuck is indicated to lower layers.

4.6.4.5 Header Compression and Decompression

The header compression protocol is based on the Robust Header Compression (ROHC) framework. There are multiple header compression algorithms, called profiles, defined for the ROHC framework. Each profile is specific to the particular network layer, transport layer or upper layer protocol combination e.g. TCP/IP and RTP/UDP/IP.

The detailed definition of the ROHC channel is specified as part of the ROHC framework. This includes how to multiplex different flows (header compressed or not) over the ROHC channel, as well as how to associate a specific IP flow with a specific context state during initialization of the compression algorithm for that flow.

4.6.4.6 Ciphering and Deciphering

The ciphering function includes both ciphering and deciphering and is performed in MSL 3. For the control plane, the data unit that is ciphered is the data part of the MSL 3 PDU and the MAC-I. For the user plane, the data unit that is ciphered is the data part of the MSL 3 PDU; ciphering is not applicable to MSL 3 Control PDUs.
The ciphering algorithm and key to be used by the MSL 3 entity are configured by upper layers. Meanwhile, the ciphering function is activated by upper layers. After security activation, the ciphering function shall be applied to all MSL 3 PDUs indicated by upper layers for the downlink and the uplink, respectively.

4.6.4.7 Integrity Protection and Verification

The integrity protection function includes both integrity protection and integrity verification and is performed in MSL 3 for MSL 3 entities associated with SRBs. The data unit that is integrity protected is the PDU header and the data part of the PDU before ciphering.
The integrity protection algorithm and key to be used by the MSL 3 entity are configured by upper layers. Meanwhile, the integrity protection function is activated by upper layers.
As the RADIO CONNECTION message which activates the integrity protection function is itself integrity protected with the configuration included in this RADIO CONNECTION message, this message needs first be decoded by RADIO CONNECTION before the integrity protection verification could be performed for the PDU in which the message was received.

4.6.4.8 Handling of unknown, unforeseen and erroneous protocol data

When a MSL 3 entity receives a MSL 3 PDU that contains reserved or invalid values, the MSL 3 entity shall:

- chuck the received PDU.

4.6.4.9 Protocol data units, formats and parameters

The MSL 3 Data PDU is used to convey:
- a MSL 3 SDU SN; and
- user plane data containing an uncompressed MSL 3 SDU; or
- user plane data containing a compressed MSL 3 SDU; or
- control plane data; and
- a MAC-I field for SRBs only;

The MSL 3 Control PDU is used to convey:

- a MSL 3 status report indicating which MSL 3 SDUs are missing and which are not following a MSL 3 re-establishment.
- header compression control information, e.g. interspersed ROHC feedback.

4.6.4.10 Formats

4.6.4.10.1 General

A MSL 3 PDU is a bit string that is byte aligned (i.e. multiple of 8 bits) in length. In the figures in sub clause 6.2, bit strings are represented by tables in which the most significant bit is the leftmost bit of the first line of the table, the least significant bit is the rightmost bit on the last line of the table, and more generally the bit string is to be read from left to right and then in the reading order of the lines. The bit order of each parameter field within a MSL 3 PDU is represented with the first and most significant bit in the leftmost bit and the last and least significant bit in the rightmost bit.

MSL 3 SDUs are bit strings that are byte aligned (i.e. multiple of 8 bits) in length. A compressed or uncompressed SDU is included into a MSL 3 PDU from the first bit onward.

4.6.4.11 Parameters

If not otherwise mentioned in the definition of each field then the bits in the parameters shall be interpreted as follows: the left most bit string is the first and most significant and the right most bit is the last and least significant bit.

Unless otherwise mentioned, integers are encoded in standard binary encoding for unsigned integers. In all cases the bits appear ordered from MSB to LSB when read in the PDU.

4.6.4.12 State variables

This sub clause describes the state variables used in MSL 3 entities in order to specify the MSL 3 protocol.

All state variables are non-negative integers.

The transmitting side of each MSL 3 entity shall maintain the following state variables:

a) Next_ TX_SN

The variable Next_ TX_SN indicates the MSL 3 SN of the next MSL 3 SDU for a given MSL 3 entity.

b) TX_HFN

The variable TX_HFN indicates the HFN value for the generation of the COUNT value used for MSL 3 PDUs for a given MSL 3 entity.

The receiving side of each MSL 3 entity shall maintain the following state variables:

c) Next_ RX_SN

The variable Next_ RX_SN indicates the next expected MSL 3 SN by the receiver for a given MSL 3 entity.

d) RX_HFN

The variable RX_HFN indicates the HFN value for the generation of the COUNT value used for the received MSL 3 PDUs for a given MSL 3 entity.

e) Last_Submitted_ RX_SN

For MSL 3 entities for DRBs mapped on MSL 2 AM the variable Last_Submitted_RX_SN indicates the SN of the last MSL 3 SDU delivered to the upper layers.

4.6.4.13 Timers

The transmitting side of each MSL 3 entity for DRBs shall maintain the following timers:

chuck*Timer*

The duration of the timer is configured by upper layers. In the transmitter, a new timer is started upon reception of an SDU from upper layer.

4.6.4.14 Constants

a) Reordering_Window

Indicates the size of the reordering window. The size equals to 2048, i.e. half of the MSL 3 SN space, for radio bearers that are mapped on MSL 2 AM.

b) Maximum_MSL 3_SN is:

- 4095 if the MSL 3 entity is configured for the use of 12 bit SNs
- 127 if the MSL 3 entity is configured for the use of 7 bit SNs
- 31 if the MSL 3 entity is configured for the use of 5 bit SNs

Chapter 5 Common Channel Specification

5.1 Overview

In this chapter, common channel (CCH) to apply to link establishment control is specified.
The structure of PHY layer, logical common channel (LCCH) structural methods and control message format are clarified.

5.2 Common Channel (CCH)

CCH consists of BCCH, PCH, TCCH and SCCH as shown in Figure 5.1.

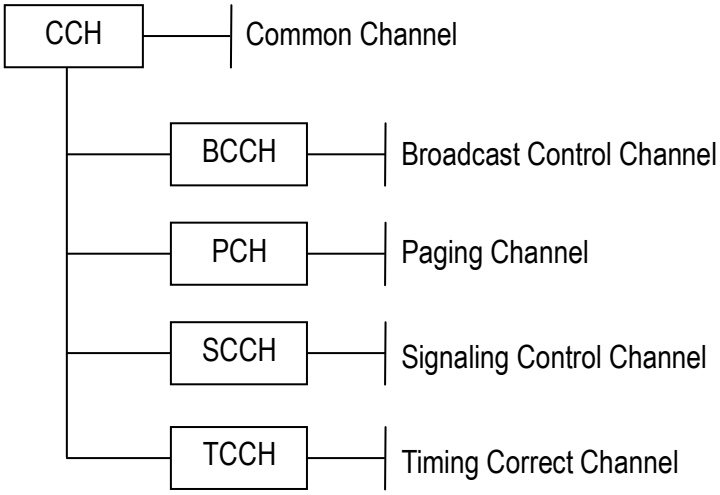

Figure 5.1 CCH Structure

The function of CCH is summarized in Table 5.1.

Table 5.1 Function Description of CCH

Channel Name	Direction	Function Description
BCCH	DL	BCCH is a DL channel to broadcast the control information from BS to MS.
PCH	DL	PCH is a DL channel to inform the paging information from BS to MS.
SCCH	Both	SCCH is both DL and UL channel for LCH assignment. DL SCCH notifies allocation of an individual channel to MS. And, UL SCCH requests LCH re-assignment to BS.
TCCH	UL	TCCH is an UL channel to detect UL transmission timing. Also, MS requires LCH establishment using TCCH.

Figure 5.2 shows the correspondence between PHY PRU and function channel in protocol phase.

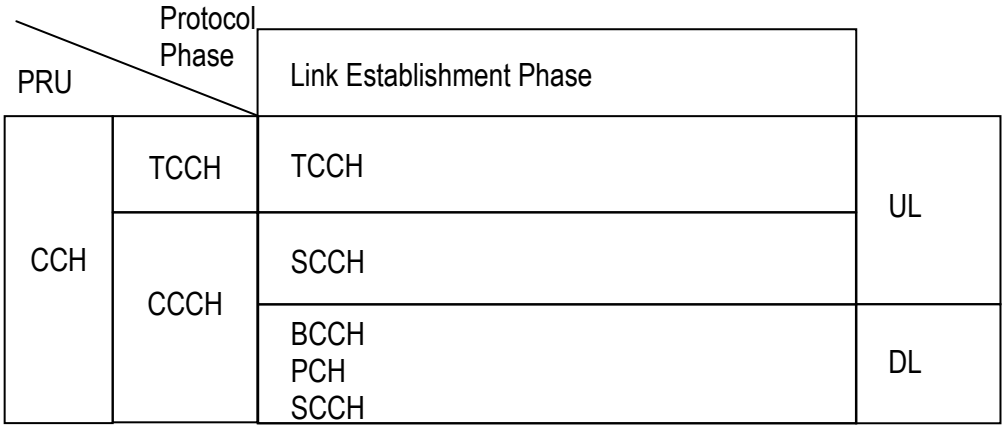

Figure 5.2 PRU, Protocol Phase and Functional Channel Correspondence

5.2.1 Logical Common Channel (LCCH)

Rules of the structure of logical common channel (LCCH) are shown in Figure 5.3.

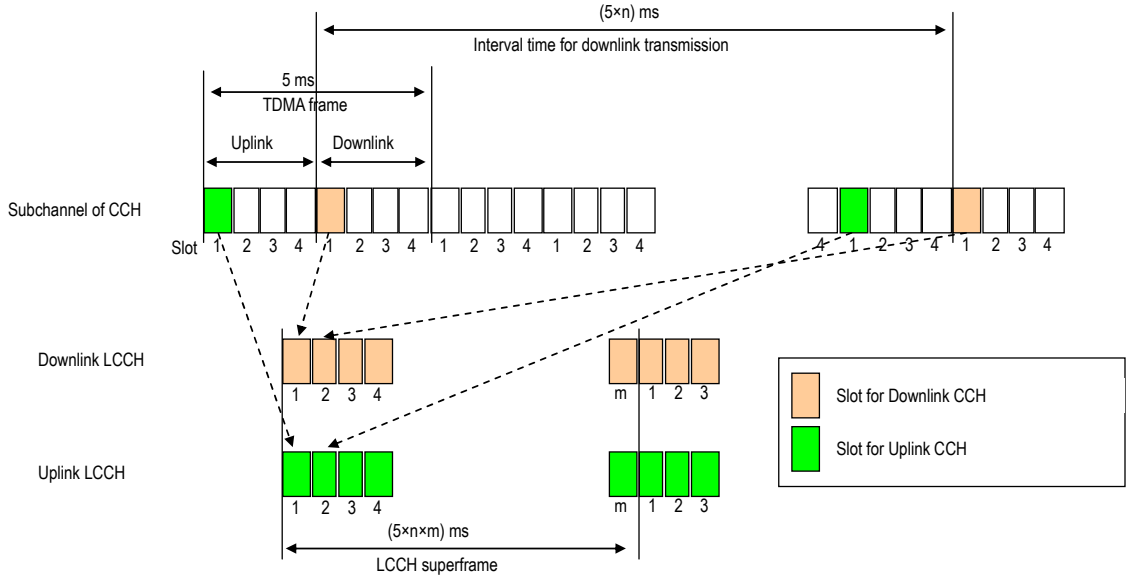

n is LCCH interval value. Refer to Section 5.2.3.1.

Figure 5.3 Slot and LCCH

LCCH has the superframe structure shown in Section 5.2.3. All transmission/reception timing of slots for controlling intermittent transmission and so forth is generated based on the superframe.

5.2.2 Definition of Superframe

The minimum cycle of the DL LCCH that specifies the slot position of all LCCH elements is specified as the LCCH superframe. As DL LCCH elements, there are three types of LCCH elements:

They are BCCH, which is used by the appropriate system, all PCH (P1-Pk: Number of groups = k) corresponding to the paging group as well as the SCCH with fixed insertion.

BCCH(A) must be transmitted by the lead slot of the LCCH superframe. The leading position of the superframe is reported via BCCH transmission. Also, BCCH(B) is defined by something other than the superframe lead.

5.2.3 Superframe Structure of DL LCCH

The superframe structure of the DL LCCH that is defined by profile data is informed to each MS on BCCH.

Depending on the way to select the profile data that defines the structure, the LCCH superframe can transmit the identical paging group(pi: i = 1 to k) multiple times, but the number of continuous transmissions (provided by n_{BS}) for one paging call and the number of same paging groups n_{SG} included in the LCCH superframe are independent. Continuous transmission in response to one paging call can be concluded within the LCCH superframe, or it can be spread over several superframes.

If necessary, it is possible to temporarily replace LCCH elements except for BCCH (A), and send the other LCCH elements.

Otherwise, the frame basic unit must follow the rules below.

(a) Within one frame basic unit, regularly intermittently transmitted BCCH or SCCH appears first, and PCH is established as the function channel that follows it.

(b) Within one frame basic unit, if n_{PCH} data is greater than or equal to two, the respective PCHs are continuously established.

Further, during system operation, if profile data is modified, it is necessary to control information flow and contents so that all MSs can receive those modified contents.

Specific profile data are shown below.

5.2.3.1 LCCH Interval Value (n)

LCCH interval value shows the cycle in which BS intermittently transmits an LCCH slot. It is the value expressed by the number of TDMA frames (n) within the intermittent transmission cycle.

5.2.3.2 Frame Basic Unit Length (n_{SUB})

This stands for the length of the LCCH superframe, which constitutes consecutive elements of BCCH, SCCH and PCH. This LCCH superframe constituent element is called the frame basic unit.

5.2.3.3 Number of Same Paging Groups (n_{SG})

This stands for the number of times that the same paging group is repeatedly transmitted in one superframe.

5.2.3.4 PCH Number (n_{PCH})

This stands for the number of PCH signal elements in a frame basic unit.

5.2.3.5 Paging Grouping Factor (n_{GROUP})

This stands for the number of frame basic units required for one transmission of each PCH belonging to all paging groups in one superframe.

Furthermore the multiple (n_{GROUP}) of the number of PCHs (n_{PCH}) is specified as the group division number of PCH information.

However, when the PCH paging groups are mutually related as two LCCH are used, number of group division is calculated as $n_{GROUP} \times n_{PCH} \times 2$.

5.2.3.6 Battery Saving Cycle Maximum value (n_{BS})

n_{BS} stands for the number of times that BS continuously transmits the identical reception signal to a certain paging group. The maximum battery saving cycles of MS that are permitted by the system depending on n_{BS} are specified.
(Maximum battery saving cycle = 5 ms × n × n_{SUB} × n_{GROUP} × n_{BS})

5.2.3.7 The Relationship Among Profile Data

The relationship among profile data are shown below.

$n_{SUB} \geq n_{PCH} + 1$	In the frame basic unit, n_{PCH} + 1 is the lowest frame basic unit length because BCCH is always assigned.
$N = n_{SG} \times n_{GROUP}$	The number of frame basic units N within an LCCH superframe is given by the product of the number of the same paging groups n_{SG} and the paging grouping factor n_{GROUP}.
(Units are frame basic units)	
$n_{FRM} \leq (\geq) n_{GROUP} \times n_{BS}$	If the number of the same paging groups n_{SG} in the LCCH superframe is the same as the battery saving cycle maximum value n_{BS}, there will be an equal sign. In other cases, there will not be an equal sign. Left side: Number of frame basic units in LCCH superframe Right side: Maximum battery saving cycle (The unit is referred to as the frame basic unit.)

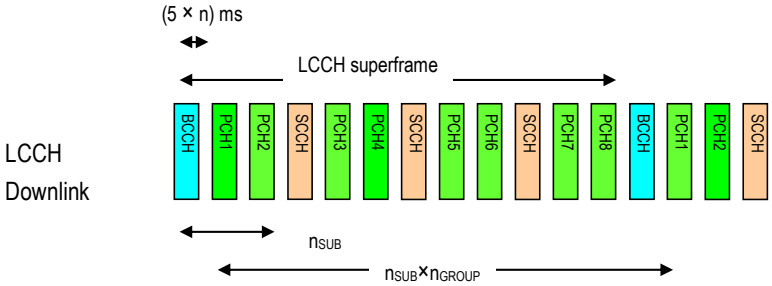

- The diagram above shows an example in which n_{SG}=1, n_{SUB}=3, n_{PCH}=2, n_{GROUP}=4

Figure 5.4 An Example of LCCH Structure

5.2.3.8 Paging Group Calculation Rules

From the information on Paging ID and BCCH, PCH which should be received is computable with the following formula. Refer to Section 5.5.4 for Paging ID.

[Paging Group formula]

Paging Group = (Paging ID) MOD ($n_{PCH} \times n_{GROUP}$) + 1

Paging ID : Identification information for paging

n_{PCH} : Number of PCHs in the frame basic unit

n_{GROUP} : Paging grouping factor

5.2.3.9 Optional Paging Group Calculation Rules

The MS may use Discontinuous Reception (DRX) in idle mode in order to reduce power consumption. One Paging Occasion (PO) is a slot where there may be P-MSID transmitted on ADECCH addressing the paging message. One Paging Frame (PF) is one Radio Frame, which may contain one or multiple Paging Occasion(s). When DRX is used the MS needs only to monitor one PO per DRX.
PF and PO is determined by following formulae using the DRX parameters provided in System Information:

PF is given by following equation:

SFN mod T= (T div N)*(MS_ID mod N)

Index i_s pointing to PO from slot pattern will be derived from following calculation:

i_s = floor(MS_ID/N) mod Ns

The index i-s position to PO should meet the following subframe pattern: when i_s is 0, the PO will be in subframe #0; when i_s is 1 and Ns is 2, the PO will be in subframe #5; when i_s is 1 and Ns is 4, the PO will be in subframe #1; when i_s is 2 and Ns is 4, the PO will be in subframe #5 and when i_s is 3 and Ns is 4, the PO will be in subframe #6.
System Information DRX parameters stored in the MS shall be updated locally in the MS whenever the DRX parameter values are changed in SI.
The following Parameters are used for the calculation of the PF and i_s:

- T: DRX cycle of the MS. T is determined by the shortest of the MS specific DRX value, if allocated by upper layers, and a default DRX value broadcast in system information. If MS specific DRX is not configured by upper layers, the default value is applied.

- nB: 4T, 2T, T, T/2, T/4, T/8, T/16, T/32.
- N: min(T,nB) ;
- Ns: max(1,nB/T)
- MS_ID: IMSI mod 1024.

IMSI is given as sequence of digits of type Integer (0..9), IMSI shall in the formulae above be interpreted as a decimal integer number, where the first digit given in the sequence represents the highest order digit.
For example:

IMSI = 12 (digit1=1, digit2=2)

In the calculations, this shall be interpreted as the decimal integer "12", not "1x16+2 = 18".

5.2.3.10 Intermittent Transmission Timing for ICH

Figure 5.5 shows the intermittent transmission timing of ICH according to the ICH offset and the ICH period. ICH offset indicates the beginning frame of ICH based on the CCH frame. ICH period indicates the cycle of ICH based on the beginning frame by ICH offset. However, the intermittent transmission timing of ICH must always be adjusted according to the beginning frame of ICH based on the CCH frame.
Refer to Section 5.5.6.1.3 for information elements of the ICH offset and the ICH period.

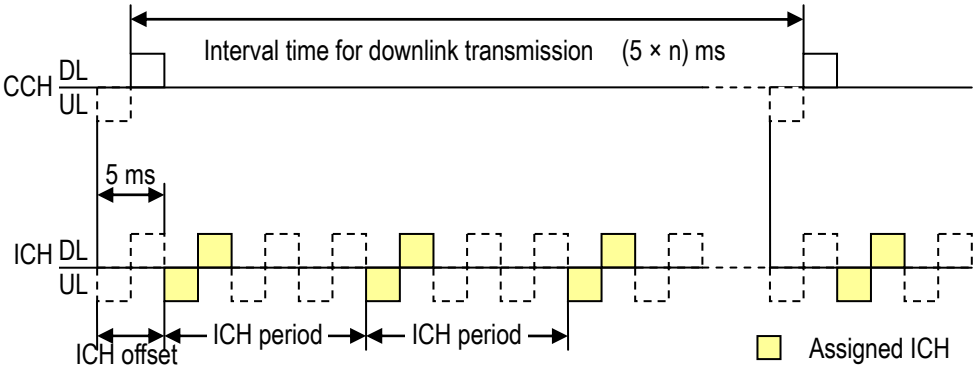

n is LCCH interval value. Refer to Section 5.2.3.1.

Figure 5.5 Intermittent Transmission Timing for ICH

5.2.4 Structure of UL LCCH

The UL LCCH is sent from each MS only when needed. It is used as the UL slot 2.5 ms before the DL LCCH. Refer to Figure 5.3.

5.2.5 Structure of DL LCCH

A standard structural example of the DL LCCH is shown in Figure 5.6.

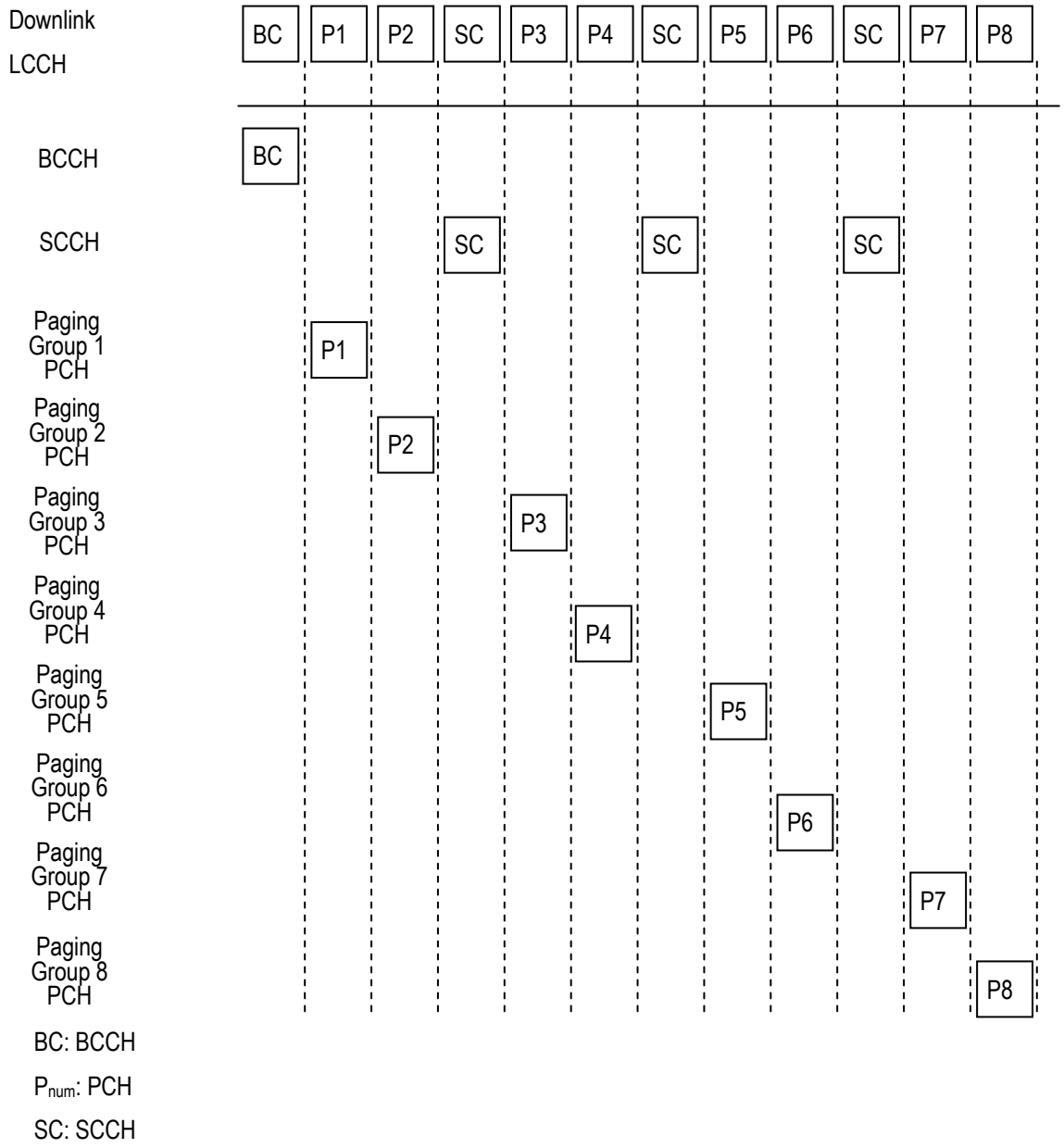

Figure 5.6 Structural Example of DL LCCH

5.2.6 LCCH Multiplexing

BS can multiply LCCHs within the scope of the physical slot transmission condition. In this case, MS can receive at least one logical common channel transmission from BS. Shown here is a standard structural example that uses two DL LCCHs.

5.2.6.1 When PCH Paging Groups Being Independent

The PCH paging group of the LCCHs f1 and f2 are mutually independent, but each DL LCCH superframe structure is identical. Refer to Section 5.5.2.1 for $n1_{offset}$ and n_{offset}.

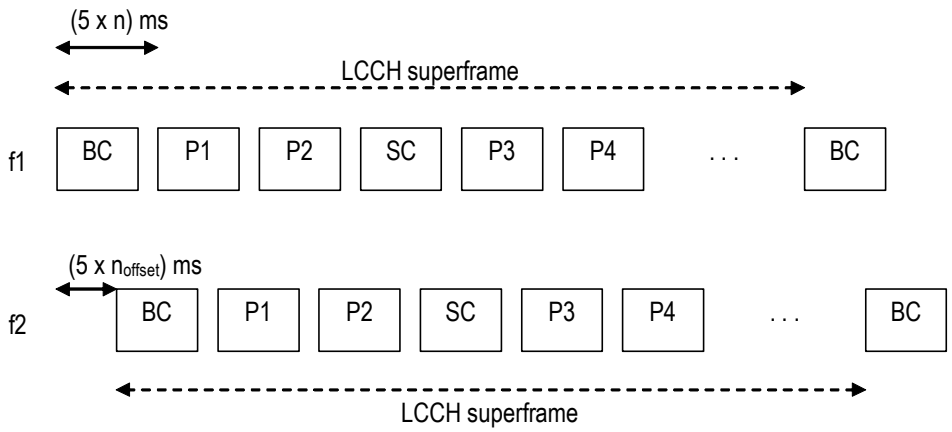

BC :BCCH
P_{num} :PCH
SC :SCCH

Here, an example is shown for the case where two LCCH are the same absolute slot.

Figure 5.7 Example of Multiplex for Independent LCCH

5.2.6.2 When PCH Paging Groups Being Inter-related

LCCH f1's PCH transmits odd-numbered groups, and f2 transmits even-numbered groups.

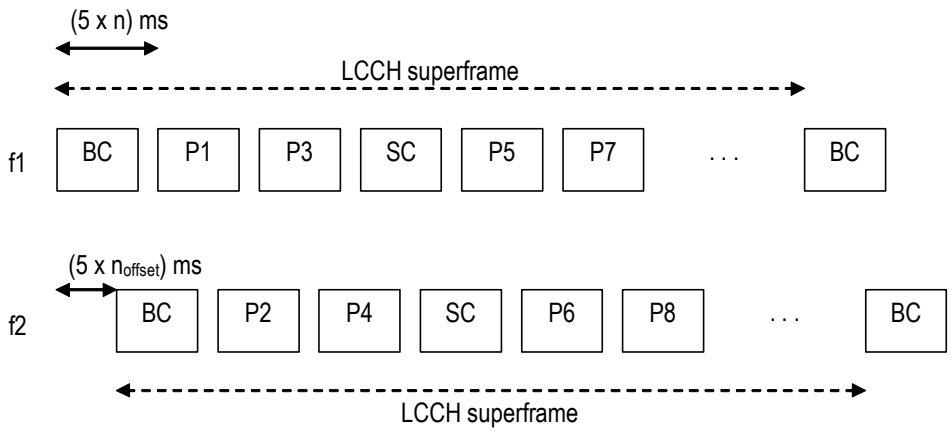

BC :BCCH
P_{num} :PCH
SC :SCCH

Here, an example is shown for the case where two LCCH are the same absolute slot.

Figure 5.8 Example of Multiplex for Inter-related LCCH

5.3 PHY Frame Format

The PHY frame formats for CCH are shown in Figure 5.9 to Figure 5.14.

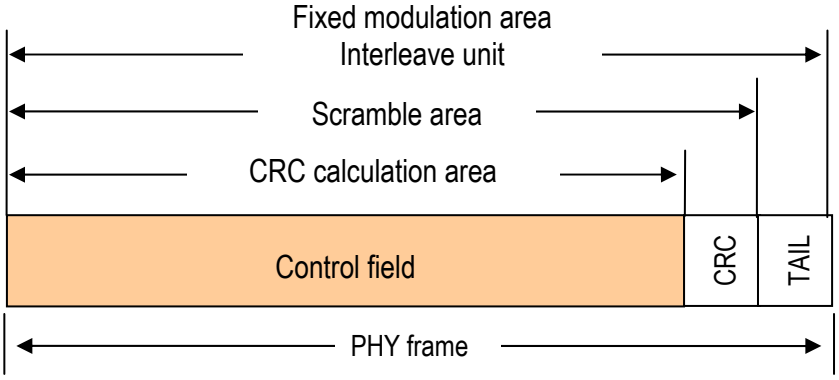

Figure 5.9 PHY Frame Format for CCH

Figure 5.9 shows that the modulation and the CRC calculation are of PHY format for CCH. CCH uses the fixed Modulation. Modulation method is BPSK for OFDMA and π / 2 - BPSK for SC, while the coding rate is 1/2. Interleaving process is done in the entire fixed modulation area. CRC of the control field is calculated. After CRC addition, the scramble is done from the control field to CRC.

The value of scramble refers to Table 3.3.

5.3.1 BCCH

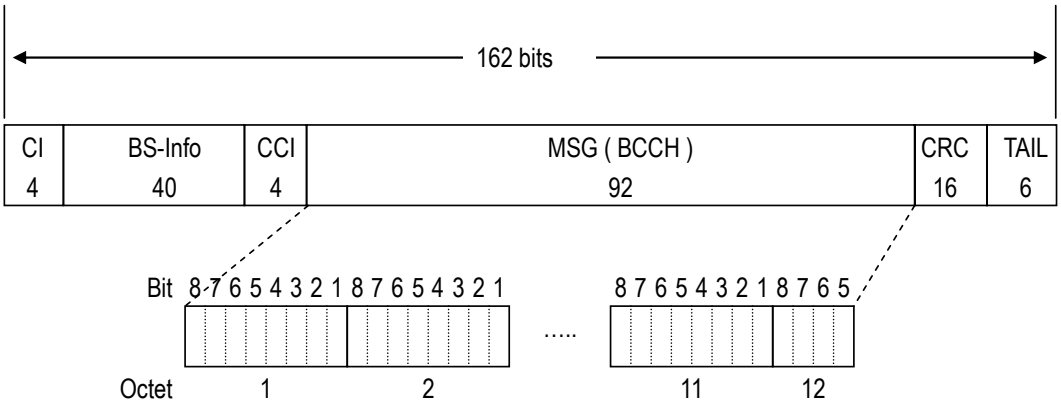

Figure 5.10 BCCH Format

5.3.2 PCH

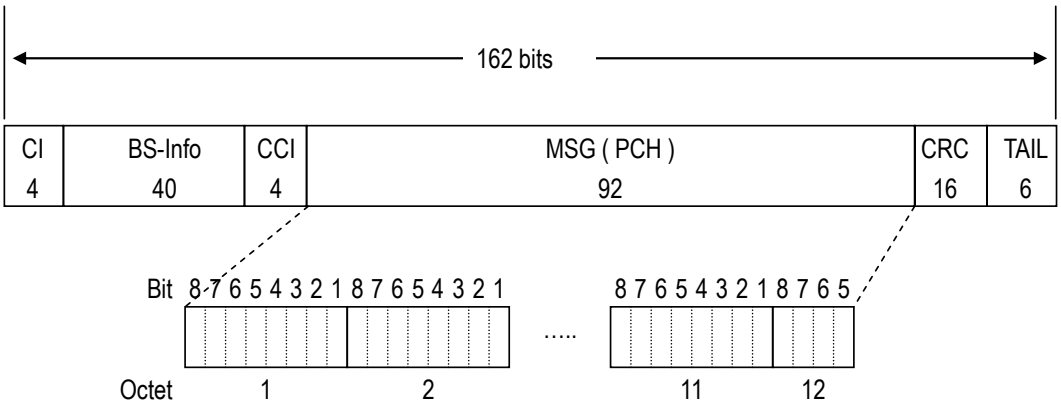

Figure 5.11 PCH Format

5.3.3 TCCH

TCCH is a signal pattern. It is defined as timing correct channel at Sections 3.5.5 and 3.6.6.

5.3.4 SCCH

5.3.4.1 DL SCCH

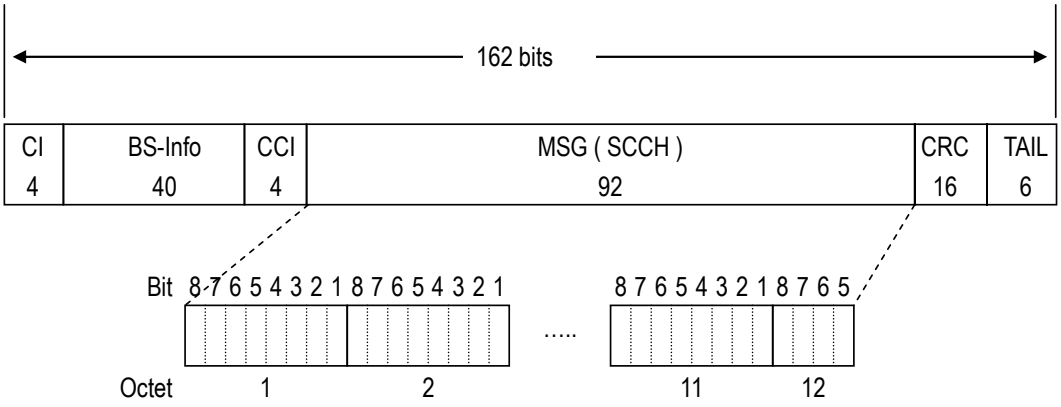

Figure 5.12 DL SCCH Format

5.3.4.2 UL SCCH for OFDMA

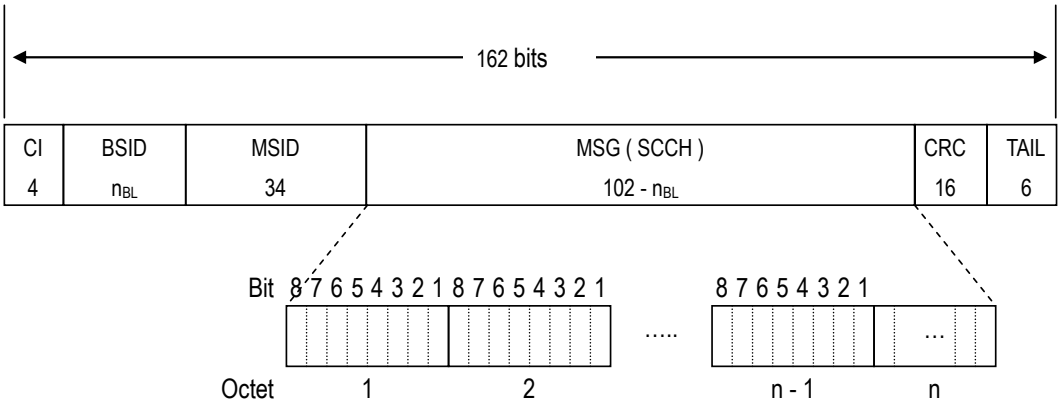

Refer to Section 5.5.2.1 for n_{BL}.

Figure 5.13 UL SCCH Format for OFDMA

5.3.4.3 UL SCCH for SC

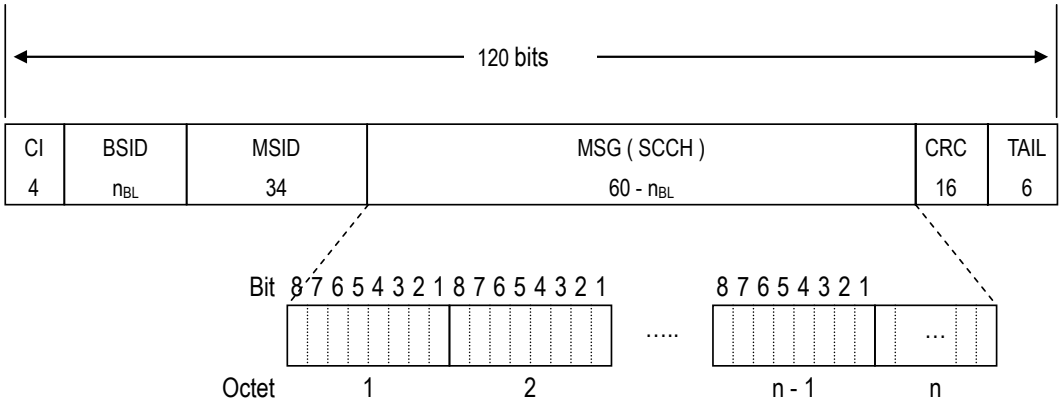

Refer to Section 5.5.2.1 for n_{BL}.

Figure 5.14 UL SCCH Format for SC (without virtual GI extension)

5.4 Control Field Format

5.4.1 Channel Identifier (CI)

CI coding rules are shown in Table 5.2 and Table 5.3.

Table 5.2 CI Coding for DL CCH

Bit 4	3	2	1	
0	0	1	1	BCCH (B)
0	1	0	0	BCCH (A)
1	0	0	1	SCCH
1	0	1	1	PCH
Other				Reserved

Table 5.3 CI Coding for UL CCH

Bit 4	3	2	1	
1	0	1	0	SCCH
Other				Reserved

5.4.2 BS Information (BS-Info)

BS-Info must be composed according to the format shown in Figure 5.15.

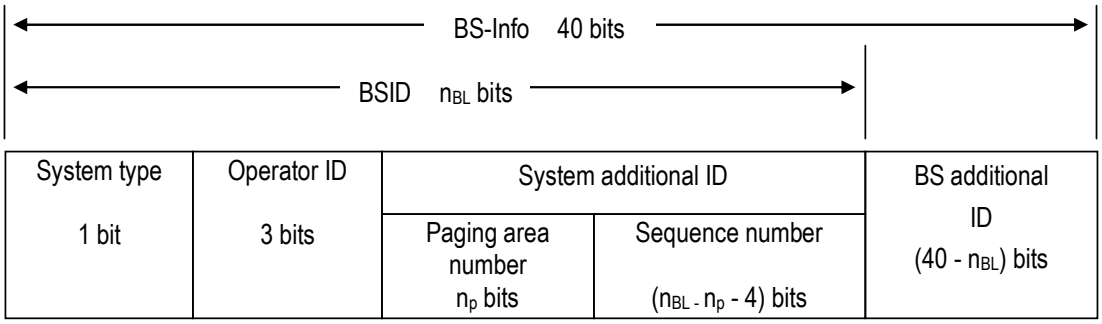

Refer to Section 5.5.2.1 for n_{BL} and n_p.

Figure 5.15 BS-Info Format

BS-Info is composed of BSID and BS additional ID. BSID is defined for individual ID of BS.

5.4.2.1 Base Station ID (BSID)

The area of BSID is indicated in the BSID area bit length (n_{BL}) as "radio channel information broadcasting" message on BCCH. The following information elements are included in BSID.

5.4.2.1.1 System Type

The system type is indicated in public system.

Table 5.4 System Type

Bit 1	
0	Reserved
1	Public system

5.4.2.1.2 Operator ID

Operator ID length is three bits. The allocation of the bit is separately specified.

5.4.2.1.3 System Additional ID

The system additional ID is composed of the paging area number and the sequence number. The area of paging area number is indicated in the paging area number length (n_p) as "radio channel information broadcasting" message on BCCH.

5.4.2.1.3.1 Paging Area Number

Paging area is identified by paging area number.

5.4.2.1.3.2 Sequence Number

BS is identified by sequence number.

5.4.2.2 BS Additional ID

BS additional ID is an area to notify of the function of each BS.

5.4.3 Common Control Information (CCI)

CCI is composed of the absolute slot number.

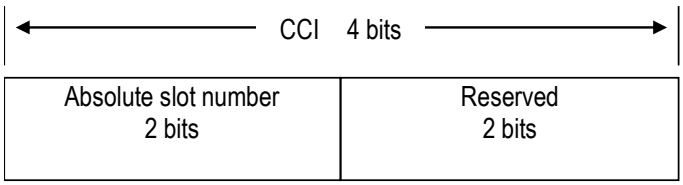

Figure 5.16 CCI Format

5.4.3.1 Absolute Slot Number

Absolute slot number indicates the number of the slot which the BS sends CCH in.

Table 5.5 Absolute Slot Number

Bit 2	Bit 1	
0	0	1st TDMA slot for DL.
0	1	2nd TDMA slot for DL.
1	0	3rd TDMA slot for DL.
1	1	4th TDMA slot for DL.

5.4.4 Mobile Station ID (MSID)

The length of MSID is 34 bits.

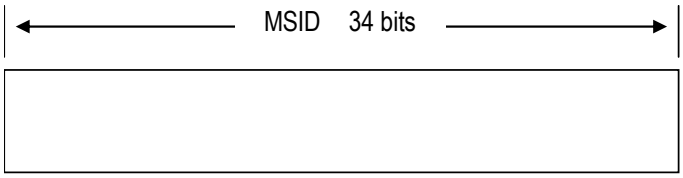

Figure 5.17 MSID Format

5.5 MSG Field

5.5.1 Message Type List

A list of messages defined in the MSG field is shown in Table 5.6.

Table 5.6 Message for MSG Field

Message for MSG (BCCH)	Reference
"Radio channel information broadcasting" message	5.5.2.1
"System information broadcasting" message	5.5.2.2
"Optional information broadcasting" message	5.5.2.3
Message for MSG (PCH)	**Reference**
“No Paging” message	5.5.4.1
"Paging type 1" message	5.5.4.2
"Paging type 2" message	5.5.4.3
"Paging type 3" message	5.5.4.4
"Paging type 4" message	5.5.4.5
"Paging type 5" message	5.5.4.6
"Paging type 6" message	5.5.4.7
"Paging type 7" message	5.5.4.8
Message for MSG (SCCH)	**Reference**
"Idle" message	5.5.6.1.1
"LCH assignment 1" message	5.5.6.1.2
"LCH assignment 2" message	5.5.6.1.3
"LCH assignment 3" message	5.5.6.1.4
"LCH assignment standby" message	5.5.6.1.5
"LCH assignment reject" message	5.5.6.1.6
"LCH assignment re-request" message	5.5.6.2.1

5.5.2 MSG (BCCH)

The format of message type for BCCH is shown in Table 5.7, and the coding is shown in Table 5.8.

Table 5.7 Format of Message Type for BCCH

Octet \ Bit	8	7	6	5	4	3	2	1
1	Message type				Reserved			

Table 5.8 Message Type Coding for BCCH

Bit 8	7	6	5	
0	0	0	1	"Radio channel information broadcasting" message
0	0	1	0	"System information broadcasting" message
0	0	1	1	"Optional information broadcasting" message
		Other		Reserved

5.5.2.1 "Radio Channel Information Broadcasting" Message

BS must broadcast the radio channel structure information to MS using this message. The message format is shown in Table 5.9, and the information element explanations are shown in Table 5.10. Refer to Section 5.2.3 for the relationship between the information elements of this message and the superframe.

Table 5.9 "Radio Channel Information Broadcasting" Message

Message type : "Radio channel information broadcasting" message
Direction : BS → MS (DL)
Function channel : BCCH

Octet \ Bit	8	7	6	5	4	3	2	1
1	0	0	0	1	Reserved			
	Message Type							
2	Reserved		LCCH Interval Value n					
3	Paging Grouping Factor n_{GROUP}				Paging Area Number Length n_p			
4	Odd / Even ID	Re-served	Number of Same Paging Groups n_{SG}			Battery Saving Cycle Maximum Value n_{BS}		
5	Control Carrier Structure		PCH Number n_{PCH}			Frame Basic Unit Length n_{SUB}		
6	n_{offset}		$n1_{offset}$					
7	Re-served	Broadcasting Status Indication			Global Definition Information Pattern			
8	Protocol Version							
9	Reserved			BSID Area Bit Length n_{BL}				
10	MCC (Mobile Country Code)							
11	MNC (Mobile Network Code)							
12								

Table 5.10 Information Elements in "Radio Channel Information Broadcasting" Message

LCCH Interval Value n (Octet 2)
It shows the DL LCCH slot intermittent cycle.

Bit 6	5	4	3	2	1	
0	0	0	0	0	0	Reserved
0	0	0	0	0	1	n = 1
0	0	0	0	1	0	n = 2
0	0	0	0	1	1	n = 3
		:				:
0	1	0	1	0	0	n = 20
		:				:
1	1	1	1	1	1	n = 63

Paging Grouping Factor n_{GROUP} (Octet 3)
It shows the value of PCH information corresponding to the number of group divisions.

Bit 8	7	6	5	
0	0	0	0	LCCH superframe is not constructed (optional)
0	0	0	1	n_{GROUP} = 1
0	0	1	1	n_{GROUP} = 2
	:			:
1	1	1	1	n_{GROUP} = 15

(Note) If LCCH is multiplexed, the values of n_{PCH} and n_{GROUP} will be set so that the paging group number does not exceed 127.

Paging Area Number Length n_p (Octet 3)
It shows the bit length of the paging area number included in the BSID.
Refer to Section 5.4.2 for composition of BSID.

Bit 4	3	2	1	
0	0	0	0	Reserved
0	0	0	1	n_p = 4
0	0	1	0	n_p = 6
0	0	1	1	n_p = 8
0	1	0	0	n_p = 10
0	1	0	1	n_p = 12
0	1	1	0	n_p = 13
0	1	1	1	n_p = 14
1	0	0	0	n_p = 15
1	0	0	1	n_p = 16
1	0	1	0	n_p = 17
1	0	1	1	n_p = 18
1	1	0	0	n_p = 19
1	1	0	1	n_p = 20
1	1	1	0	n_p = 21
1	1	1	1	n_p = 22

(Note), n_p must be the same even in a different paging area if handover between paging areas is executed.

Odd / Even ID (Octet 4)

(a) This information element has the following meanings when (1 0) (shows that there is a mutual relationship between PCH paging group) is set in the control carrier structure (Octet 5) information element contained in "radio channel information broadcasting" message:

Bit 8	
0	It shows LCCH which transmits even-numbered paging group.
1	It shows LCCH which transmits odd-numbered paging group.

(b) In other cases than stated above, it has the following meanings:

Bit 8	
0	Reserved
1	Reserved

Number of Same Paging Groups n_{SG} (Octet 4)

It shows the number of PCH slots belonging to the same paging group in the LCCH superframe.

Bit 6	5	4	
0	0	0	LCCH superframe is not constructed (optional)
0	0	1	$n_{SG} = 1$
	:		:
1	1	1	$n_{SG} = 7$

Battery Saving Cycle Maximum Value n_{BS} (Octet 4)

It shows the times BS continuously sends the same paging signal to the paging group.

Bit 3	2	1	
0	0	0	LCCH superframe is not constructed (optional)
0	0	1	$n_{BS} = 1$
	:		:
1	1	1	$n_{BS} = 7$

Control Carrier Structure (Octet 5)

It shows the presence or absence of a mutual relationship between paging group and number of LCCHs used by the relevant BS.

Bit 8	Bit 7	
0	0	Shows that only 1 LCCH is used.
0	1	Shows that 2 LCCHs are used, and each individual LCCH is independent.
1	0	Shows that 2 LCCHs are used, and PCH paging groups are mutually related.
1	1	Reserved

PCH Number n_{PCH} (Octet 5)

It shows the number of PCHs in the frame basic unit.

Bit 6	Bit 5	Bit 4	
0	0	0	No PCH (optional)
0	0	1	1 PCH slots in frame basic unit (n_{PCH} = 1)
	:		:
1	1	1	7 PCH slots in frame basic unit (n_{PCH} = 7)

(Note) If LCCH is multiplexed, the values of n_{PCH} and n_{GROUP} will be set so that the paging group number does not exceed 127.

Frame Basic Unit Length n_{SUB} (Octet 5)

It shows the length of the LCCH superframe structural element (frame basic unit).

Bit 3	Bit 2	Bit 1	
0	0	0	(Optional)
0	0	1	n_{SUB} = 1
	:		:
1	1	1	n_{SUB} = 7

n_{offset} (Octet 6)

When the value of control carrier structure is (0 1) or (1 0), this information element shows that the other control slot has transmitted in one of the absolute slot numbers 1, 2, 3, or 4.

Bit 8	Bit 7	
0	0	It shows that the absolute slot number is the 1st slot position for DL.
0	1	It shows that the absolute slot number is the 2nd slot position for DL.
1	0	It shows that the absolute slot number is the 3rd slot position for DL.
1	1	It shows that the absolute slot number is the 4th slot position for DL.

(Note) The time from the local control slot to the other control slot is given by the following equation.

Δt ms = 5 × n1offset + 0.625 × (absolute slot number of other control slot – absolute slot number of local control slot)

$n1_{offset}$ (Octet 6)

When the value of control carrier structure is (0 1) or (1 0), this information element shows that the other control slot has conducted transmission in the TDMA frame after 5 × $n1_{offset}$ ms.

Bit 6	Bit 5	Bit 4	Bit 3	Bit 2	Bit 1	
0	0	0	0	0	0	$n1_{offset}$ = 0
0	0	0	0	0	1	$n1_{offset}$ = 1
0	0	0	0	1	0	$n1_{offset}$ = 2
0	0	0	0	1	1	$n1_{offset}$ = 3
		:				:
1	1	1	1	1	1	$n1_{offset}$ = 63

(Note) The time from the local control slot to the other control slot is given by the following equation.

Δt ms = 5 × n1offset + 0.625 × (absolute slot number of other control slot – absolute slot number of local control slot)

Broadcasting Status Indication (Octet 7)

It shows the presence or absence of information broadcasting messages other than "radio channel information broadcasting" message sent on the relevant LCCH.

Bit 7	Bit 6	Bit 5	
-	-	1/0	"System information broadcasting" message present / absent
-	1/0	-	"Optional information broadcasting" message present / absent
1/0	-	-	Reserved

Global Definition Information Pattern (Octet 7)

It shows the relevant pattern number of the present "radio channel information broadcasting" message. When "radio channel information broadcasting" message changes, the new global definition information pattern is set.

Bit 4	3	2	1	
0	0	0	0	Global definition information pattern (0)
0	0	1	0	Global definition information pattern (1)
0	1	0	0	Global definition information pattern (2)
	:			:
1	1	1	0	Global definition information pattern (7)
	Other			Reserved

Protocol Version (Octet 8)

It shows protocol version supported by BS.

Bit 8	7	6	5	4	3	2	1	
-	-	-	-	-	-	-	1/0	Version 1 present / absent
-	-	-	-	-	-	1/0	-	Version 2 present / absent
			Other					Reserved

BSID Area Bit Length n_{BL} (Octet 9)

It shows the BSID area bit length included in the BS information.
Refer to Section 5.4.2.

Bit 5	4	3	2	1	
0	0	0	0	0	n_{BL} = 15
0	0	0	0	1	n_{BL} = 16
0	0	0	1	0	n_{BL} = 17
		:			:
1	1	0	0	1	n_{BL} = 40
		Other			Reserved

Mobile Country Code (Octet 10-11)
It shows the country identification. The code assignment rule shall obey ITU-T E.212. Assigned decimal digits shall be changed to binary digits in order to be set in this element area.

Mobile Network Code (Octet 11-12)
It shows the network identification. The code assignment rule shall obey ITU-T E.212. Assigned decimal digits shall be changed to binary digits in order to be set in this element area.

5.5.2.2 "System Information Broadcasting" Message

BS can broadcast system information to MS using this message. The message format is shown in Table 5.11 and explanation of elements is shown in Table 5.12.

Table 5.11 "System Information Broadcasting" Message

Message type : "System information broadcasting" message
Direction : BS → MS (DL)
Function channel : BCCH

Octet \ Bit	8	7	6	5	4	3	2	1
1	0	0	1	0	Reserved			
	Message Type							
2	Reserved							Restriction Indication
3	Restriction Class							
4								
5	Reserved							
6								
7								
8								
9								
10								
11						Broadcasting Message Status Number m_{sys}		
12	Broadcasting Reception Indication							

Table 5.12 Information Elements in "System Information Broadcasting" Message

Restriction Indication (Octet 2)
It is used to indicate if this message includes restriction information.

Bit 1	
0	This message does not include restriction information.
1	This message includes restriction information.

Restriction Class (Octet 3-4)
It shows the restriction class number equal to the last digit in decimal digits of MSID. It is a priority class from class 10 to Class 15 over others. MS shall NOT start both outgoing call and incoming call while indicated restriction from BS, except handover and location registration.

Octet 3

Bit 8	7	6	5	4	3	2	1	
-	-	-	-	-	-	-	0/1	Class 0 no restriction/restriction
-	-	-	-	-	-	0/1	-	Class 1 no restriction/restriction
-	-	-	-	-	0/1	-	-	Class 2 no restriction/restriction
-	-	-	-	0/1	-	-	-	Class 3 no restriction/restriction
			:					
0/1	-	-	-	-	-	-	-	Class 7 no restriction/restriction

Octet 4

Bit 8	7	6	5	4	3	2	1	
-	-	-	-	-	-	-	0/1	Class 8 no restriction/restriction
-	-	-	-	-	-	0/1	-	Class 9 no restriction/restriction
-	-	-	-	-	0/1	-	-	Class 10 no restriction/restriction (Reserved)
-	-	-	-	0/1	-	-	-	Class 11 no restriction/restriction
-	-	-	0/1	-	-	-	-	Class 12 no restriction/restriction (Reserved)
			:					(Reserved)
0/1	-	-	-	-	-	-	-	Class 15 no restriction/restriction (Reserved)

Restriction start condition
(1) System Information Broadcasting Message is transmitted and
(2) System Information Broadcasting Message/Restriction Indication=1 and
(3) The class of System Information Broadcasting Message/Restriction Class=1 corresponds MS class

Restriction clear condition
(1) No reception System Information Broadcasting Message between two times reception of Global Definition Information Pattern or

(2) System Information Broadcasting Message/Restriction Indication=0 or
(3) The class of System Information Broadcasting Message/Restriction Class=0 corresponds MS class

Broadcasting Message Status Number m_{sys} (Octet 11)

It shows the status number of the present "system information broadcasting" message. This element can be used arbitrarily, but when the status changes, the new status is set.

Bit 3	2	1	
0	0	0	$m_{sys} = 0$
0	0	1	$m_{sys} = 1$
0	1	0	$m_{sys} = 2$
	:		:
1	1	1	$m_{sys} = 7$

Broadcasting Reception Indication (Octet 12)

It shows global definition information pattern or local information broadcasting reception indication of broadcasting information message other than "radio channel information broadcasting" message. Refer to Section 5.5.2.1 for global definition information pattern.

Bit 8	7	6	5	
-	-	-	0	Global definition information pattern indication
0	0	0	0	Global definition information pattern (0)
0	0	1	0	Global definition information pattern (1)
	:			:
1	1	1	0	Global definition information pattern (7)
-	-	-	1	Local information broadcasting reception indication
0	0	0	1	"System information broadcasting" message reception indication
0	0	1	1	"Optional information broadcasting" message reception indication
	Other			Reserved

5.5.2.3 "Optional Information Broadcasting" Message

BS can broadcast optional information to MS using this message. The message format is shown in Table 5.13 and explanation of elements is shown in Table 5.14.

Table 5.13 "Optional Information Broadcasting" Message

Message type : "Optional information broadcasting" message
Direction : BS → MS (DL)
Function channel : BCCH

Octet \ Bit	8	7	6	5	4	3	2	1
1	0	0	1	1	Reserved			
	Message Type							
2	Reserved							
3								
4								
5								
6								
7								
8								
9								
10								
11						Broadcasting Message Status Number m_{opt}		
12	Broadcasting Reception Indication							

Table 5.14 Information Elements in "Optional Information Broadcasting" Message

Broadcasting Message Status Number m_{opt} (Octet 11)
It shows the status number of the present "system information broadcasting" message. This element can be used arbitrarily, but when the status changes, the new status is set.

Bit 3	2	1	
0	0	0	$m_{opt} = 0$
0	0	1	$m_{opt} = 1$
0	1	0	$m_{opt} = 2$
	:		:
1	1	1	$m_{opt} = 7$

Broadcasting Reception Indication (Octet 12)

It shows global definition information pattern or local information broadcasting reception indication of broadcasting information message other than "radio channel information broadcasting" message. Refer to Section 5.5.2.1 for global definition information pattern.

Bit 8	7	6	5	
-	-	-	0	Global definition information pattern indication
0	0	0	0	Global definition information pattern (0)
0	0	1	0	Global definition information pattern (1)
	:			:
1	1	1	0	Global definition information pattern (7)
-	-	-	1	Local information broadcasting reception indication
0	0	0	1	"System information broadcasting" message reception indication
0	0	1	1	"Optional information broadcasting" message reception indication
	Other			Reserved

5.5.3 MSG (Optional BCCH)

5.5.3.1 MSG (BCCH)

System information is divided into the *MasterInformation*Broadcasting*Block* (MIBB) and a number of *SystemInformation*Broadcasting*Blocks* (SIBBs);

The mapping of SIBBs to SI messages is flexibly configurable by schedulingInformation;

The BS may schedule ADSCH transmissions concerning function channels other than BCCH in the same slot as used for BCCH. The minimum MS capability restricts the BCCH mapped to ADSCH e.g. regarding the maximum rate.

System information validity and notification of changes:

Change of system information only occurs at specific radio frames, i.e. the concept of a modification period is used. System information may be transmitted a number of times with the same content within a modification period, as defined by its scheduling. The modification period boundaries are defined by SFN values for which SFN mod *m*= 0, where *m* is the number of radio frames comprising the modification period. The modification period is configured by system information.

When the network changes (some of the) system information, it first notifies the MSs about this change, i.e. this may be done throughout a modification period. In the next modification period,

the network transmits the updated system information. Upon receiving a change notification, the MS acquires the new system information immediately from the start of the next modification period. The MS applies the previously acquired system information until the MS acquires the new system information.

The *Paging* message is used to inform MSs in IDLE MODE and MSs in ACTIVE MODE about a system information change. If the MS receives a *Paging* message including the *systemInfoModification*, it knows that the system information will change at the next modification period boundary. Although the MS may be informed about changes in system information, no further details are provided e.g. regarding which system information will change.

SystemInformationBlockType1 includes a value tag, *systemInfoValueTag*, that indicates if a change has occurred in the SI messages. MSs may use *systemInfoValueTag*, e.g. upon return from out of coverage, to verify if the previously stored SI messages are still valid. Additionally, the MS considers stored system information to be invalid after 3 hours from the moment it was successfully confirmed as valid, unless specified otherwise.

The MS verifies that stored system information remains valid by either checking *a flag* in *SystemInformationBlockType1* after the modification period boundary, or attempting to find the *systemInfoModification* indication at least *modificationPeriodCoeff* times during the modification period in case no paging is received, in every modification period. If no paging message is received by the MS during a modification period, the MS may assume that no change of system information will occur at the next modification period boundary. If MS in ACTIVE MODE, during a modification period, receives one paging message, it may deduce from the presence/ absence of *systemInfoModification* whether a change of system information will occur in the next modification period or not.

5.5.4 MSG (PCH)

The format of message type for PCH is shown in Table 5.15, and the coding is shown in Table 5.16.

Table 5.15 Format of Message Type for PCH

Octet \ Bit	8	7	6	5	4	3	2	1
1	Message Type				Broadcasting Reception Indication			

Table 5.16 Message Type Coding for PCH

Bit 8	7	6	5	
0	0	0	0	No paging
0	0	0	1	"Paging type 1" message (single paging / 50 bits' Paging ID)
0	0	1	0	"Paging type 2" message (single paging / 34 bits' Paging ID)
0	0	1	1	"Paging type 3" message (single paging / 24 bits' Paging ID)
0	1	0	0	"Paging type 4" message (multiplex paging / 34 bits' Paging ID)
0	1	0	1	"Paging type 5" message (multiplex paging / 24 bits' Paging ID)
0	1	1	0	"Paging type 6" message (paging and LCH assignment / 34 bits' Paging ID) LCH assignment does not include intermitted information of ICH.
0	1	1	1	"Paging type 7" message (paging and LCH assignment / 24 bits' Paging ID) LCH assignment includes intermitted information of ICH.
Other				Reserved

5.5.4.1 “No Paging” Message

Using this message, BS can notify MS of no paging in this PCH.
The message format is shown in Table 5.17, and the explanation of information elements is shown in Table 5.18.

Table 5.17 "No Paging" Message

Message type : "No Paging" message
Direction : BS → MS (DL)
Function channel : PCH

Octet \ Bit	8	7	6	5	4	3	2	1
1	0	0	0	0	Broadcasting Reception Indication			
	Message Type							
2	Reserved							
3								
4								
5								
6								
7								
8								
9								
10								
11								
12		Broadcasting Message Status Number mi						

Table 5.18 Information Elements in "No Paging" Message

Broadcasting Reception Indication (Octet 1)
It shows global definition information pattern or local information broadcasting reception indication of broadcasting information message other than “radio channel information broadcasting” message. Refer to Section 5.5.2.1 for global definition information pattern.

Bit 4	3	2	1	
-	-	-	0	Global definition information pattern indication
0	0	0	0	Global definition information pattern (0)
0	0	1	0	Global definition information pattern (1)
	:			:
1	1	1	0	Global definition information pattern (7)
-	-	-	1	Local information broadcasting reception indication
0	0	0	1	"System information broadcasting" message reception indication
0	0	1	1	"Optional information broadcasting" message reception indication
Other				Reserved

Broadcasting Message Status Number m_i (Octet 12)

It shows the status number of the broadcasting message when Broadcasting Reception Indication indicates Local information broadcasting reception indication.

Broadcasting Reception Indication (Octet 1)		Meaning of m_i
Global definition information pattern indication		D.C.
Local information broadcasting reception indication	System information broadcasting message reception indication	m_{sys}
	Optional information broadcasting message reception indication	m_{opt}
Other		D.C.

Bit 7	6	5	
0	0	0	$m_i = 0$
0	0	1	$m_i = 1$
0	1	0	$m_i = 2$
	:		:
1	1	1	$m_i = 7$

5.5.4.2 "Paging Type 1" Message (single paging / 50 bits' Paging ID)

Using this message, BS informs that MS received a paging. When MS responds to the paging from BS, it is necessary to request the link establishment. The message format is shown in Table 5.19, and the explanation of information elements is shown in Table 5.20.

Table 5.19 "Paging Type 1" Message

Message type : "Paging type 1" message
Direction : BS → MS (DL)
Function channel : PCH

Octet \ Bit	8	7	6	5	4	3	2	1
1	0	0	0	1	Broadcasting Reception Indication			
	Message Type							
2	MSB							
3								
4								
5			Paging ID					
6								
7								
8		LSB	Application Type					
9								
10			Reserved					
11								
12		Broadcasting Message Status Number mi						

Table 5.20 Information Elements in "Paging Type 1" Message

Broadcasting Reception Indication (Octet 1)
It shows global definition information pattern or local information broadcasting reception indication of broadcasting information message other than "radio channel information broadcasting" message. Refer to Section 5.5.2.1 for global definition information pattern.

Bit 4	3	2	1	
-	-	-	0	Global definition information pattern indication
0	0	0	0	Global definition information pattern (0)
0	0	1	0	Global definition information pattern (1)
	:			:
1	1	1	0	Global definition information pattern (7)
-	-	-	1	Local information broadcasting reception indication
0	0	0	1	"System information broadcasting" message reception indication
0	0	1	1	"Optional information broadcasting" message reception indication
	Other			Reserved

Paging ID (Octet 2 - 8)
Paging ID is specified as a 50 bits' number, and ID for identifying MS on the paging message. However, MSID can be allocated when Paging ID is a 34 bits' number.

Application Type (Octet 8)
It indicates application type.

Bit 6	5	4	3	2	1	
0	0	0	0	0	0	Restoration from sleep state
0	0	0	0	0	1	Voice
0	0	0	0	1	0	Unrestricted digital information
		Other				Reserved

Broadcasting Message Status Number m_i (Octet 12)
It shows the status number of the broadcasting message when Broadcasting Reception Indication indicates Local information broadcasting reception indication.

Broadcasting Reception Indication (Octet 1)		Meaning of m_i
Global definition information pattern indication		D.C.
Local information broadcasting reception indication	System information broadcasting message reception indication	m_{sys}
	Optional information broadcasting message reception indication	m_{opt}
Other		D.C.

Bit 7	6	5	
0	0	0	$m_i = 0$
0	0	1	$m_i = 1$
0	1	0	$m_i = 2$
	:		:
1	1	1	$m_i = 7$

5.5.4.3 "Paging Type 2" Message (single paging / 34 bits' Paging ID)

Using this message, BS informs that MS received a paging. When MS responds to the paging from BS, it is necessary to request the link establishment. The message format is shown in Table 5.21, and the explanation of information elements is shown in
Table 5.22.

Table 5.21 "Paging Type 2" Message

Message type : "Paging type 2" message
Direction : BS → MS (DL)
Function channel : PCH

Octet \ Bit	8	7	6	5	4	3	2	1
1	0	0	1	0	Broadcasting Reception Indication			
		Message Type						
2	MSB							
3								
4			Paging ID					
5								
6		LSB	Application Type					
7								
8								
9			Reserved					
10								
11								
12		Broadcasting Message Status Number mi						

Table 5.22 Information Elements in "Paging Type 2" Message

Broadcasting Reception Indication (Octet 1)
It shows global definition information pattern or local information broadcasting reception indication of broadcasting information message other than "radio channel information broadcasting" message. Refer to Section 5.5.2.1 for global definition information pattern.

Bit 4	3	2	1	
-	-	-	0	Global definition information pattern indication
0	0	0	0	Global definition information pattern (0)
0	0	1	0	Global definition information pattern (1)
	:			:
1	1	1	0	Global definition information pattern (7)
-	-	-	1	Local information broadcasting reception indication
0	0	0	1	"System information broadcasting message" reception indication
0	0	1	1	"Optional information broadcasting message" reception indication
Other				Reserved

Paging ID (Octet 2 - 6)
Paging ID is specified as a 34 bits' number, and ID for identifying MS on the paging message. Besides, MSID of a 34 bits' number can be allocated.

Application Type (Octet 6)
It indicates application type.

Bit 6	5	4	3	2	1	
0	0	0	0	0	0	Restoration from sleep state
0	0	0	0	0	1	Voice
0	0	0	0	1	0	Unrestricted digital information
Other						Reserved

Broadcasting Message Status Number m_i (Octet 12)
It shows the status number of the broadcasting message when Broadcasting Reception Indication indicates Local information broadcasting reception indication.

Broadcasting Reception Indication (Octet 1)		Meaning of m_i
Global definition information pattern indication		D.C.
Local information broadcasting reception indication	System information broadcasting message reception indication	m_{sys}
	Optional information broadcasting message reception indication	m_{opt}
Other		D.C.

Bit 7	6	5	
0	0	0	$m_i = 0$
0	0	1	$m_i = 1$
0	1	0	$m_i = 2$
	:		:
1	1	1	$m_i = 7$

5.5.4.4 "Paging Type 3" Message (single paging / 24 bits' Paging ID)

Using this message, BS informs that MS received a paging. When MS responds to the paging from BS, it is necessary to request the link establishment. The message format is shown in Table 5.23, and the explanation of information elements is shown in Table 5.24.

Table 5.23 "Paging Type 3" Message

Message type : "Paging type 3" message
Direction : BS → MS (DL)
Function channel : PCH

Octet \ Bit	8	7	6	5	4	3	2	1
1	0	0	1	1	Broadcasting Reception Indication			
	Message Type							
2	MSB							
3	Paging ID							
4								LSB
5	Reserved		Application Type					
6	Reserved							
7								
8								
9								
10								
11								
12		Broadcasting Message Status Number mi						

Table 5.24 Information Elements in "Paging Type 3" Message

Broadcasting Reception Indication (Octet 1)
It shows global definition information pattern or local information broadcasting reception indication of broadcasting information message other than "radio channel information broadcasting" message. Refer to Section 5.5.2.1 for global definition information pattern.

Bit 4	3	2	1	
-	-	-	0	Global definition information pattern indication
0	0	0	0	Global definition information pattern (0)
0	0	1	0	Global definition information pattern (1)
	:			:
1	1	1	0	Global definition information pattern (7)
-	-	-	1	Local information broadcasting reception indication
0	0	0	1	"System information broadcasting" message reception indication
0	0	1	1	"Optional information broadcasting" message reception indication
	Other			Reserved

Paging ID (Octet 2 - 4)
Paging ID is specified as a 24 bits' number, and ID for identifying MS on the paging message. However, MSID can be allocated when Paging ID is a 34 bits' number.

Application Type (Octet 5)
It indicates application type.

Bit 6	5	4	3	2	1	
0	0	0	0	0	0	Restoration from sleep state
0	0	0	0	0	1	Voice
0	0	0	0	1	0	Unrestricted digital information
		Other				Reserved

Broadcasting Message Status Number m_i (Octet 12)
It shows the status number of the broadcasting message when Broadcasting Reception Indication indicates Local information broadcasting reception indication.

Broadcasting Reception Indication (Octet 1)		Meaning of m_i
Global definition information pattern indication		D.C.
Local information broadcasting reception indication	System information broadcasting message reception indication	m_{sys}
	Optional information broadcasting message reception indication	m_{opt}
Other		D.C.

Bit 7	6	5	
0	0	0	$m_i = 0$
0	0	1	$m_i = 1$
0	1	0	$m_i = 2$
	:		:
1	1	1	$m_i = 7$

5.5.4.5 "Paging Type 4" Message (multiplex paging / 34 bits' Paging ID)

Using this message, BS informs that MS received a paging. When MS responds to the paging from BS, it is necessary to request the link establishment. The message format is shown in Table 5.25, and the explanation of information elements is shown in Table 5.26.
Besides, this PCH may contain two messages.

Table 5.25 "Paging Type 4" Message

Message type : "Paging type 4" message
Direction : BS → MS (DL)
Function channel : PCH

Octet \ Bit	8	7	6	5	4	3	2	1
1	0	1	0	0	Broadcasting Reception Indication			
		Message Type						
2	MSB							
3								
4			Paging ID					
5								
6		LSB	Application Type					
7	MSB							
8								
9			Paging ID					
10								
11		LSB	Application Type					
12	Re-served	Broadcasting Message Status Number mi						

Table 5.26 Information Elements in "Paging Type 4" Message

Broadcasting Reception Indication (Octet 1)

It shows global definition information pattern or local information broadcasting reception indication of broadcasting information message other than "radio channel information broadcasting" message. Refer to Section 5.5.2.1 for global definition information pattern.

Bit 4	3	2	1	
-	-	-	0	Global definition information pattern indication
0	0	0	0	Global definition information pattern (0)
0	0	1	0	Global definition information pattern (1)
	:			:
1	1	1	0	Global definition information pattern (7)
-	-	-	1	Local information broadcasting reception indication
0	0	0	1	"System information broadcasting" message reception indication
0	0	1	1	"Optional information broadcasting" message reception indication
	Other			Reserved

Paging ID (Octet 2 - 6, 7 - 11)

Paging ID is specified as a 34 bits' number, and ID for identifying MS on the paging message. Besides, MSID of 34 bits' number can be allocated.

Application Type (Octet 6, 11)

It indicates application type.

Bit 6	5	4	3	2	1	
0	0	0	0	0	0	Restoration from sleep state
0	0	0	0	0	1	Voice
0	0	0	0	1	0	Unrestricted digital information
		Other				Reserved

Broadcasting Message Status Number m_i (Octet 12)

It shows the status number of the broadcasting message when Broadcasting Reception Indication indicates Local information broadcasting reception indication.

Broadcasting Reception Indication (Octet 1)		Meaning of m_i
Global definition information pattern indication		D.C.
Local information broadcasting reception indication	System information broadcasting message reception indication	m_{sys}
	Optional information broadcasting message reception indication	m_{opt}
Other		D.C.

Bit 7	6	5	
0	0	0	$m_i = 0$
0	0	1	$m_i = 1$
0	1	0	$m_i = 2$
	:		:
1	1	1	$m_i = 7$

5.5.4.6 "Paging Type 5" Message (multiplex paging / 24 bits' Paging ID)

Using this message, BS informs that MS received a paging. When MS responds to the paging from BS, it is necessary to request the link establishment. The message format is shown in Table 5.27, and the explanation of information elements is shown in Table 5.28.
Besides, this PCH may contain two messages.

Table 5.27 "Paging Type 5" Message

Message type : "Paging type 5" message
Direction : BS → MS (DL)
Function channel : PCH

Octet \ Bit	8	7	6	5	4	3	2	1
1	0	1	0	1	Broadcasting Reception Indication			
	Message Type							
2	MSB							
3	Paging ID							
4								LSB
5	Reserved		Application Type					
6	MSB							
7	Paging ID							
8								LSB
9	Reserved		Application Type					
10	Reserved							
11								
12		Broadcasting Message Status Number mi						

Table 5.28 Information Elements in "Paging Type 5" Message

Broadcasting Reception Indication (Octet 1)
It shows global definition information pattern or local information broadcasting reception indication of broadcasting information message other than "radio channel information broadcasting" message. Refer to Section 5.5.2.1 for global definition information pattern.

Bit 4	3	2	1	
-	-	-	0	Global definition information pattern indication
0	0	0	0	Global definition information pattern (0)
0	0	1	0	Global definition information pattern (1)
	:			:
1	1	1	0	Global definition information pattern (7)
-	-	-	1	Local information broadcasting reception indication
0	0	0	1	"System information broadcasting" message reception indication
0	0	1	1	"Optional information broadcasting" message reception indication
	Other			Reserved

Paging ID(Octet 2 - 4, 6 - 8)
Paging ID is specified as a 24 bits' number, and ID for identifying MS on the paging message. However, MSID can be allocated when Paging ID is a 34 bits' number.

Application Type (Octet 5, 9)
It indicates application type.

Bit 6	5	4	3	2	1	
0	0	0	0	0	0	Restoration from sleep state
0	0	0	0	0	1	Voice
0	0	0	0	1	0	Unrestricted digital information
		Other				Reserved

Broadcasting Message Status Number m_i (Octet 12)
It shows the status number of the broadcasting message when Broadcasting Reception Indication indicates Local information broadcasting reception indication.

Broadcasting Reception Indication (Octet 1)		Meaning of m_i
Global definition information pattern indication		D.C.
Local information broadcasting reception indication	System information broadcasting message reception indication	m_{sys}
	Optional information broadcasting message reception indication	m_{opt}
Other		D.C.

Bit 7	6	5	
0	0	0	$m_i = 0$
0	0	1	$m_i = 1$
0	1	0	$m_i = 2$
	:		:
1	1	1	$m_i = 7$

5.5.4.7 "Paging Type 6" Message (paging and LCH assignment / 34 bits' Paging ID)

Using this message, BS informs that MS received a paging. When MS responds to the paging from BS, it is necessary to request the link establishment. The message format is shown in Table 5.29, and the explanation of information elements is shown in Table 5.30.
Besides, this PCH may contain a LCH assignment message.

Table 5.29 "Paging Type 6" Message

Message type : "Paging type 6" message
Direction : BS → MS (DL)
Function channel : PCH

Octet \ Bit	8	7	6	5	4	3	2	1
1	0	1	1	0	Broadcasting Reception Indication			
	Message Type							
2	MSB							
3								
4			Paging ID					
5								
6			LSB	Application Type				
7	Sub-slot Number		Temporary LCH Number					
8	LCH Request Timing	Assignment PRU Number						
9	Shift Direction Control Information							
10	Reserved		Power Control Information					
11	TCCH Pattern Number				ANCH MIMO (UL)		ANCH MIMO (DL)	
12	Re-served	Broadcasting Message Status Number mi						

(Note) Refer to Section 5.5.6.1.2 for information elements of LCH assignment message more than Octet 6.

Table 5.30 Information Elements in "Paging type 6" Message

Broadcasting Reception Indication (Octet 1)

It shows global definition information pattern or local information broadcasting reception indication of broadcasting information message other than "radio channel information broadcasting" message. Refer to Section 5.5.2.1 for global definition information pattern.

Bit 4	3	2	1	
-	-	-	0	Global definition information pattern indication
0	0	0	0	Global definition information pattern (0)
0	0	1	0	Global definition information pattern (1)
	:			:
1	1	1	0	Global definition information pattern (7)
-	-	-	1	Local information broadcasting reception indication
0	0	0	1	"System information broadcasting" message reception indication
0	0	1	1	"Optional information broadcasting" message reception indication
	Other			Reserved

Paging ID(Octet 2 - 6)

Paging ID is specified as a 34 bits' number, and ID for identifying MS on the paging message. Besides, MSID of 34 bits' number can be allocated.

Application Type (Octet 6)

It indicates application type.

Bit 6	5	4	3	2	1	
0	0	0	0	0	0	Restoration from sleep state
0	0	0	0	0	1	Voice
0	0	0	0	1	0	Unrestricted digital information
		Other				Reserved

Broadcasting Message Status Number m_i (Octet 12)

It shows the status number of the broadcasting message when Broadcasting Reception Indication indicates Local information broadcasting reception indication.

Broadcasting Reception Indication (Octet 1)		Meaning of m_i
Global definition information pattern indication		D.C.
Local information broadcasting reception indication	System information broadcasting message reception indication	m_{sys}
	Optional information broadcasting message reception indication	m_{opt}
Other		D.C.

Bit 7	6	5	
0	0	0	$m_i = 0$
0	0	1	$m_i = 1$
0	1	0	$m_i = 2$
	:		:
1	1	1	$m_i = 7$

5.5.4.8 "Paging Type 7" Message (paging and LCH assignment / 24 bits' Paging ID)

Using this message, BS informs that MS received a paging. When MS responds to the paging from BS, it is necessary to request the link establishment. The message format is shown in Table 5.31, and the explanation of information elements is shown in Table 5.32.
Besides, this PCH may contain a LCH assignment message.

Table 5.31 "Paging Type 7" Message

Message type : "Paging type 7" message
Direction : BS → MS (DL)
Function channel : PCH

Octet \ Bit	8	7	6	5	4	3	2	1
1	0	1	1	1	Broadcasting Reception Indication			
	Message Type							
2	MSB							
3	Paging ID							
4								LSB
5	Reserved		Application Type					
6	Sub-slot Number		Temporary LCH Number					
7	LCH Request Timing	Assignment PRU Number						
8	Shift Direction Control Information							
9	Reserved		Power Control Information					
10	TCCH Pattern Number				ICH Offset			
11	ICH Period				ANCH MIMO (UL)		ANCH MIMO (DL)	
12	Re-served	Broadcasting Message Status Number mi						

(Note) Refer to Section 5.5.6.1.3 for information elements of LCH assignment message more than Octet 5.

Table 5.32 Information Elements in "Paging Type 7" Message

Broadcasting Reception Indication (Octet 1)

It shows global definition information pattern or local information broadcasting reception indication of broadcasting information message other than "radio channel information broadcasting" message. Refer to Section 5.5.2.1 for global definition information pattern.

Bit 4	3	2	1	
-	-	-	0	Global definition information pattern indication
0	0	0	0	Global definition information pattern (0)
0	0	1	0	Global definition information pattern (1)
	:			:
1	1	1	0	Global definition information pattern (7)
-	-	-	1	Local information broadcasting reception indication
0	0	0	1	"System information broadcasting" message reception indication
0	0	1	1	"Optional information broadcasting" message reception indication
	Other			Reserved

Paging ID(Octet 2 - 4)

Paging ID is specified as a 24 bits' number, and ID for identifying MS on the paging message. However, MSID can be allocated when Paging ID is a 34 bits' number.

Application Type (Octet 5)

It indicates application type.

Bit 6	5	4	3	2	1	
0	0	0	0	0	0	Restoration from sleep state
0	0	0	0	0	1	Voice
0	0	0	0	1	0	Unrestricted digital information
		Other				Reserved

Broadcasting Message Status Number m_i (Octet 12)

It shows the status number of the broadcasting message when Broadcasting Reception Indication indicates Local information broadcasting reception indication.

Broadcasting Reception Indication (Octet 1)		Meaning of m_i
Global definition information pattern indication		D.C.
Local information broadcasting reception indication	System information broadcasting message reception indication	m_{sys}
	Optional information broadcasting message reception indication	m_{opt}
Other		D.C.

Bit 7	6	5	
0	0	0	$m_i = 0$
0	0	1	$m_i = 1$
0	1	0	$m_i = 2$
	:		:
1	1	1	$m_i = 7$

5.5.5 MSG (Optional PCCH)

Paging groups :

- Precise MS identity is found on PCH;
- DRX configurable via BCCH;
- Only one slot allocated per paging interval per MS;
- The network may divide MSs to different paging occasions in time;
- There is no grouping within paging occasion;
- One paging MSID for PCH.

The purpose of this procedure is to transmit paging information to a MS in IDLE MODE and/ or to inform MSs in IDLE MODE and MSs in ACTIVE MODE about a system information change.
Paging Occasion (PO) :a slot where there may be P-MSID transmitted on ADECCH addressing the paging message.
Paging Frame (PF) : one Radio Frame, which may contain one or multiple Paging Occasion(s). The details Paging Group Calculation Rules please refer to the section 5.2.3.9.

5.5.6 MSG (SCCH)

5.5.6.1 DL SCCH

The format of message type for DL SCCH is shown in Table 5.33, and the coding is shown in Table 5.34.

Table 5.33 Format of Message Type for DL SCCH

Octet \ Bit	8	7	6	5	4	3	2	1
1	Message type				Reserved			

Table 5.34 Message Type Coding for DL SCCH

Bit 8	7	6	5	
0	0	0	0	"Idle" message
0	0	0	1	"LCH assignment 1" message
0	0	1	0	"LCH assignment 2" message
0	0	1	1	"LCH assignment 3" message
0	1	0	0	"LCH assignment standby" message
0	1	0	1	"LCH assignment reject" message
Other				Reserved

5.5.6.1.1 "Idle" Message

This message can be transmitted only when there is no information to be transmitted in DL SCCH. The message format is shown in Table 5.35.

Table 5.35 "Idle" Message

Message type : "Idle" message
Direction : BS → MS (DL)
Function channel : SCCH

Octet \ Bit	8	7	6	5	4	3	2	1
1	0	0	0	0	Reserved			
	Message Type							
2	Reserved							
3								
4								
5								
6								
7								
8								
9								
10								
11								
12								

5.5.6.1.2 "LCH Assignment 1" Message

BS uses this message to perform channel assignment in response to MS after a LCH assignment request from MS is received. The message format is shown in Table 5.36, and the explanation of information elements is shown in Table 5.37.
Besides, this SCCH may contain two messages. Octet 2-6 and Octet 7-11 of messages does not contain intermittent transmission timing information for ICH (Refer to Section 5.2.3.10). Each message is sent to different MS.

Table 5.36 "LCH Assignment 1" Message

Message type : "LCH assignment 1" message
Direction : BS → MS (DL)
Function channel : SCCH

Octet \ Bit	8	7	6	5	4	3	2	1
1	0	0	0	1	Reserved			
	Message Type							
2	Sub-slot Number		Temporary LCH Number					
3	LCH Request Timing	Assignment PRU Number						
4	Shift Direction Control Information							
5	Reserved		Power Control Information					
6	TCCH Pattern Number				ANCH MIMO (UL)		ANCH MIMO (DL)	
7	Sub-slot Number		Temporary LCH Number					
8	LCH Request Timing	Assignment PRU Number						
9	Shift Direction Control Information							
10	Reserved		Power Control Information					
11	TCCH Pattern Number				ANCH MIMO (UL)		ANCH MIMO (DL)	
12	Reserved							

Table 5.37 Information Elements in "LCH Assignment 1" Message

Sub-slot Number (Octet 2, 7)
Sub-slot number indicates timing used by UL TCCH as shown in Sections 3.5.5 of OFDMA and 3.6.6 of SC.

Bit 8	7	
0	0	Sub-slot number 1
0	1	Sub-slot number 2
1	0	Sub-slot number 3
1	1	Sub-slot number 4

Temporary LCH Number (Octet 2, 7)
Temporary LCH number indicates temporary number to establish link channel.

Bit 6	5	4	3	2	1	
0	0	0	0	0	0	Temporary LCH number = 0
0	0	0	0	0	1	Temporary LCH number = 1
0	0	0	0	1	0	Temporary LCH number = 2
		:				:
1	1	1	1	1	1	Temporary LCH number = 63

LCH Request Timing (Octet 3, 8)
LCH request timing indicates LCCH timing of UL TCCH.

Bit 8	
0	UL TCCH timing before 625us x the number of UL slots
1	UL TCCH timing before LCCH Interval value n x frame length (ms) + 625us x the number of UL slot

Assignment PRU Number (Octet 3, 8)
Assignment PRU number indicates assigned number for PRU.

Bit 7	6	5	4	3	2	1	
0	0	0	0	0	0	0	Assignment PRU number = 1
0	0	0	0	0	0	1	Assignment PRU number = 2
0	0	0	0	0	1	0	Assignment PRU number = 3
			:				:
1	1	1	1	1	1	1	Assignment PRU number = 128

Shift Direction Control Information (Octet 4, 9)

Shift direction control information indicates control information of UL transmission timing for MS.

Bit 8	7	6	5	4	3	2	1	
0	0	0	0	0	0	0	0	Stay
0	0	0	0	0	0	0	1	1 step forward
0	0	0	0	0	0	1	0	2 steps forward
0	0	0	0	0	0	1	1	3 steps forward
				:				:
1	1	1	1	1	1	1	1	255 steps forward

(Note) Unit = -4 × 30 / (512 + 64) us

Power Control Information (Octet 5, 10)

Power control information indicates control information of UL transmission power for MS.

Bit 6	5	4	3	2	1	
0	1	1	1	1	1	31 steps increase
0	1	1	1	1	0	30 steps increase
			:			:
0	0	0	0	1	0	2 steps increase
0	0	0	0	0	1	1 step increase
0	0	0	0	0	0	Hold
1	1	1	1	1	1	1 step decrease
1	1	1	1	1	0	2 steps decrease
			:			:
1	0	0	0	0	1	31 steps decrease
1	0	0	0	0	0	32 steps decrease

(Note) Unit = 3 dB

TCCH Pattern Number (Octet 6, 11)

TCCH pattern number indicates the core-sequence number of UL TCCH used as shown in Appendix D. "2nd LCH assignment message (Octet 7-11) absent " can be set only to TCCH pattern of Octet 11.

Bit 8	7	6	5	
0	0	0	0	Core-sequence number 1 for OFDMA
0	0	0	1	Core-sequence number 2 for OFDMA
0	0	1	0	Core-sequence number 3 for OFDMA
0	0	1	1	Core-sequence number 4 for OFDMA
0	1	0	0	Core-sequence number 5 for OFDMA
0	1	0	1	Core-sequence number 6 for OFDMA
0	1	1	0	Core-sequence number 1 for SC
0	1	1	1	Core-sequence number 2 for SC
1	0	0	0	Core-sequence number 3 for SC
1	0	0	1	Core-sequence number 4 for SC
1	0	1	0	Core-sequence number 5 for SC
1	0	1	1	Core-sequence number 6 for SC
	:			:
1	1	1	0	Sub-slot number absent
1	1	1	1	2nd LCH assignment message (Octet 7-11) absent
	Other			Reserved

ANCH MIMO (UL) (Octet 6, 11)

ANCH MIMO (UL) indicates MIMO type for UL ANCH.

Bit 4	3	
0	0	SISO
0	1	2 layers STBC
1	0	4 layers STBC
1	1	Reserved

ANCH MIMO (DL) (Octet 6, 11)

ANCH MIMO (DL) indicates MIMO type for DL ANCH.

Bit 2	1	
0	0	SISO
0	1	2 layers STBC
1	0	4 layers STBC
1	1	Reserved

5.5.6.1.3 "LCH Assignment 2" Message

BS uses this message to perform channel assignment in response to MS after a LCH assignment request from MS is received. The message format is shown in Table 5.38, and the explanation of information elements is shown in Table 5.39.
Besides, this SCCH may contain two messages. The message from Octet 2-7 contains MIMO for ANCH and intermittent transmission timing information for ICH (Refer to Section 5.2.3.10). And the message from Octet 8-12 does not contain them. Each message is sent to different MS.

Table 5.38 "LCH Assignment 2" Message

Message type : "LCH assignment 2" message
Direction : BS → MS (DL)
Function channel : SCCH

Octet \ Bit	8	7	6	5	4	3	2	1
1	0	0	1	0	Reserved			
	Message Type							
2	Sub-slot Number		Temporary LCH Number					
3	LCH Request Timing	Assignment PRU Number						
4	Shift Direction Control Information							
5	Reserved		Power Control Information					
6	TCCH Pattern Number				ICH Offset			
7	ICH Period				ANCH MIMO (UL)		ANCH MIMO (DL)	
8	Sub-slot Number		Temporary LCH Number					
9	LCH Request Timing	Assignment PRU Number						
10	Shift Direction Control Information							
11	Reserved		Power Control Information					
12	TCCH Pattern Number							

Table 5.39 Information Elements in "LCH Assignment 2" Message

Sub-slot Number (Octet 2, 8)

Sub-slot number indicates timing used by UL TCCH as shown in Sections 3.5.5 of OFDMA and 3.6.6 of SC.

Bit 8	7	
0	0	Sub-slot number 1
0	1	Sub-slot number 2
1	0	Sub-slot number 3
1	1	Sub-slot number 4

Temporary LCH Number (Octet 2, 8)

Temporary LCH number indicates temporary number to establish link channel.

Bit 6	5	4	3	2	1	
0	0	0	0	0	0	Temporary LCH number = 0
0	0	0	0	0	1	Temporary LCH number = 1
0	0	0	0	1	0	Temporary LCH number = 2
		:				:
1	1	1	1	1	1	Temporary LCH number = 63

LCH Request Timing (Octet 3, 9)

LCH request timing indicates LCCH timing of UL TCCH.

Bit 8	
0	UL TCCH timing before 625us x the number of UL slots
1	UL TCCH timing before LCCH Interval value n x frame length (ms) + 625us x the number of UL slot

Assignment PRU Number (Octet 3, 9)

Assignment PRU number indicates assigned number for PRU.

Bit 7	6	5	4	3	2	1	
0	0	0	0	0	0	0	Assignment PRU number = 1
0	0	0	0	0	0	1	Assignment PRU number = 2
0	0	0	0	0	1	0	Assignment PRU number = 3
			:				:
1	1	1	1	1	1	1	Assignment PRU number = 128

Shift Direction Control Information (Octet 4, 10)

Shift direction control information indicates control information of UL transmission timing for MS.

Bit 8	7	6	5	4	3	2	1	
0	0	0	0	0	0	0	0	Stay
0	0	0	0	0	0	0	1	1 step forward
0	0	0	0	0	0	1	0	2 steps forward
0	0	0	0	0	0	1	1	3 steps forward
				:				:
1	1	1	1	1	1	1	1	255 steps forward

(Note) Unit = -4 × 30 / (512 + 64) us

Power Control Information (Octet 5, 11)

Power control information indicates control information of UL transmission power for MS.

Bit 6	5	4	3	2	1	
0	1	1	1	1	1	31 steps increase
0	1	1	1	1	0	30 steps increase
			:			:
0	0	0	0	1	0	2 steps increase
0	0	0	0	0	1	1 step increase
0	0	0	0	0	0	Hold
1	1	1	1	1	1	1 step decrease
1	1	1	1	1	0	2 steps decrease
			:			:
1	0	0	0	0	1	31 steps decrease
1	0	0	0	0	0	32 steps decrease

(Note) Unit = 3 dB

TCCH Pattern Number (Octet 6, 12)

TCCH pattern number indicates the core-sequence number of UL TCCH used as shown in Appendix D. "2nd LCH assignment message (Octet 8 - 12) absent " can be set only to TCCH pattern of Octet 12.

Bit 8	7	6	5	
0	0	0	0	Core-sequence number 1 for OFDMA
0	0	0	1	Core-sequence number 2 for OFDMA
0	0	1	0	Core-sequence number 3 for OFDMA
0	0	1	1	Core-sequence number 4 for OFDMA
0	1	0	0	Core-sequence number 5 for OFDMA
0	1	0	1	Core-sequence number 6 for OFDMA
0	1	1	0	Core-sequence number 1 for SC
0	1	1	1	Core-sequence number 2 for SC
1	0	0	0	Core-sequence number 3 for SC
1	0	0	1	Core-sequence number 4 for SC
1	0	1	0	Core-sequence number 5 for SC
1	0	1	1	Core-sequence number 6 for SC
	:			:
1	1	1	0	Sub-slot number absent
1	1	1	1	2nd LCH assignment message (Octet 8 - 12) absent
	Other			Reserved

ICH Offset (Octet 6)

The frame used as ICH is indicated by the offset of the TDMA frame from CCH.
Refer to Section 5.2.3.10 for intermittent transmission timing of ICH offset.
When intermittent transmission timing information of ICH is not needed, "no offset" is set.

Bit 4	3	2	1	
0	0	0	0	No offset
0	0	0	1	TDMA frame after 1 frame from CCH
0	0	1	0	TDMA frame after 2 frames from CCH
0	0	1	1	TDMA frame after 3 frames from CCH
	:			:
1	1	1	1	TDMA frame after 15 frames from CCH

ICH Period (Octet 7)

The cycle of the TDMA frame that ICH uses is indicated.

Refer to Section 5.2.3.10 for intermittent transmission timing of ICH period.

When intermittent transmission timing information of ICH is not needed, "no scheduling" is set.

ICH Offset ≤ ICH Period – 1 frame

Bit 8	7	6	5	
0	0	0	0	No scheduling
0	0	0	1	2 frames
0	0	1	0	3 frames
0	0	1	1	4 frames
	:			:
1	1	1	1	16 frames

ANCH MIMO (UL) (Octet 7)

ANCH MIMO (UL) indicates MIMO type for UL ANCH.

Bit 4	3	
0	0	SISO
0	1	2 layers STBC
1	0	4 layers STBC
1	1	Reserved

ANCH MIMO (DL) (Octet 7)

ANCH MIMO (DL) indicates MIMO type for DL ANCH.

Bit 2	1	
0	0	SISO
0	1	2 layers STBC
1	0	4 layers STBC
1	1	Reserved

5.5.6.1.4 "LCH Assignment 3" Message

BS uses this message to perform channel assignment in response to MS after a LCH assignment request from MS is received. The message format is shown in Table 5.40, and the explanation of information elements is shown in Table 5.41.
Besides, this SCCH include MSID.

Table 5.40 "LCH Assignment 3" Message

Message type : "LCH assignment 3" message
Direction : BS → MS (DL)
Function channel : SCCH

Octet \ Bit	8	7	6	5	4	3	2	1
1	0	0	1	1	Reserved			
	Message Type							
2	Sub-slot Number		Temporary LCH Number					
3	LCH Request Timing	Assignment PRU Number						
4	Shift Direction Control Information							
5	Reserved		Power Control Information					
6	TCCH Pattern Number				ICH Offset			
7	ICH Period				ANCH MIMO (UL)		ANCH MIMO (DL)	
8	MSB	MSID						
9								
10								
11								
12	LSB		Reserved					

Table 5.41 Information Elements in "LCH Assignment 3" Message

Sub-slot Number (Octet 2)

Sub-slot number indicates timing used by UL TCCH as shown in Sections 3.5.5 of OFDMA and 3.6.6 of SC.

Bit 8	7	
0	0	Sub-slot number 1
0	1	Sub-slot number 2
1	0	Sub-slot number 3
1	1	Sub-slot number 4

Temporary LCH Number (Octet 2)

Temporary LCH number indicates temporary number to establish link channel.

Bit 6	5	4	3	2	1	
0	0	0	0	0	0	Temporary LCH number = 0
0	0	0	0	0	1	Temporary LCH number = 1
0	0	0	0	1	0	Temporary LCH number = 2
		:				:
1	1	1	1	1	1	Temporary LCH number = 63

LCH Request Timing (Octet 3)

LCH request timing indicates LCCH timing of UL TCCH.

Bit 8	
0	UL TCCH timing before 625us x the number of UL slots
1	UL TCCH timing before LCCH Interval value n x frame length (ms) + 625us x the number of UL slot

Assignment PRU Number (Octet 3)

Assignment PRU number indicates assigned number for PRU.

Bit 7	6	5	4	3	2	1	
0	0	0	0	0	0	0	Assignment PRU number = 1
0	0	0	0	0	0	1	Assignment PRU number = 2
0	0	0	0	0	1	0	Assignment PRU number = 3
			:				:
1	1	1	1	1	1	1	Assignment PRU number = 128

Shift Direction Control Information (Octet 4)

Shift direction control information indicates control information of UL transmission timing for MS.

Bit 8	7	6	5	4	3	2	1	
0	0	0	0	0	0	0	0	Stay
0	0	0	0	0	0	0	1	1 step forward
0	0	0	0	0	0	1	0	2 steps forward
0	0	0	0	0	0	1	1	3 steps forward
				:				:
1	1	1	1	1	1	1	1	255 steps forward

(Note) Unit = -4 × 30 / (512 + 64) us

Power Control Information (Octet 5)

Power control information indicates control information of UL transmission power for MS.

Bit 6	5	4	3	2	1	
0	1	1	1	1	1	31 steps increase
0	1	1	1	1	0	30 steps increase
			:			
0	0	0	0	1	0	2 steps increase
0	0	0	0	0	1	1 step increase
0	0	0	0	0	0	Hold
1	1	1	1	1	1	1 step decrease
1	1	1	1	1	0	2 steps decrease
			:			:
1	0	0	0	0	1	31 steps decrease
1	0	0	0	0	0	32 steps decrease

(Note) Unit = 3 dB

TCCH Pattern Number (Octet 6)

TCCH pattern number indicates the core-sequence number that the UL TCCH used as shown in Appendix D. MSID is absent when TCCH pattern number is not "Sub-slot number absent / MSID present".

Bit 8	7	6	5	
0	0	0	0	Core-sequence number 1 for OFDMA
0	0	0	1	Core-sequence number 2 for OFDMA
0	0	1	0	Core-sequence number 3 for OFDMA
0	0	1	1	Core-sequence number 4 for OFDMA
0	1	0	0	Core-sequence number 5 for OFDMA
0	1	0	1	Core-sequence number 6 for OFDMA
0	1	1	0	Core-sequence number 1 for SC
0	1	1	1	Core-sequence number 2 for SC
1	0	0	0	Core-sequence number 3 for SC
1	0	0	1	Core-sequence number 4 for SC
1	0	1	0	Core-sequence number 5 for SC
1	0	1	1	Core-sequence number 6 for SC
	:			:
1	1	1	0	Sub-slot number absent / MSID present
	Other			Reserved

ICH Offset (Octet 6)

The frame used as ICH is indicated by the offset of the TDMA frame from CCH.
Refer to Section 5.2.3.10 for intermittent transmission timing of ICH offset.
When intermittent transmission timing information of ICH is not needed, "no offset" is set.

Bit 4	3	2	1	
0	0	0	0	No offset
0	0	0	1	TDMA frame after 1 frame from CCH
0	0	1	0	TDMA frame after 2 frames from CCH
0	0	1	1	TDMA frame after 3 frames from CCH
	:			:
1	1	1	1	TDMA frame after 15 frames from CCH

ICH Period (Octet 7)

The cycle of the TDMA frame that ICH uses is indicated.
Refer to Section 5.2.3.10 for intermittent transmission timing of ICH period.
When intermittent transmission timing information of ICH is not needed, "no scheduling" is set.
ICH Offset ≤ ICH Period – 1 frame

Bit 8	7	6	5	
0	0	0	0	No scheduling
0	0	0	1	2 frames
0	0	1	0	3 frames
0	0	1	1	4 frames
	:			:
1	1	1	1	16 frames

<u>ANCH MIMO (UL) (Octet 7)</u>
ANCH MIMO (UL) indicates MIMO type for UL ANCH.

Bit 4	3	
0	0	SISO
0	1	2 layers STBC
1	0	4 layers STBC
1	1	Reserved

<u>ANCH MIMO (DL) (Octet 7)</u>
ANCH MIMO (DL) indicates MIMO type for DL ANCH.

Bit 2	1	
0	0	SISO
0	1	2 layers STBC
1	0	4 layers STBC
1	1	Reserved

MSID (Octet 8 - 12)
The length of MSID is 34 bits.

5.5.6.1.5 "LCH Assignment Standby" Message

BS uses this message to inform BS to standby. The message format is shown in Table 5.42, and the explanation of information elements is shown in Table 5.43.

Table 5.42 "LCH Assignment Standby" Message

Message type : "LCH assignment standby" message
Direction : BS → MS (DL)
Function channel : SCCH

Octet \ Bit	8	7	6	5	4	3	2	1
1	0	1	0	0	Reserved			
	Message Type							
2	Sub-slot Number		Temporary LCH Number					
3	LCH Request Timing	Reserved		Cause				
4	Reserved							
5								
6	TCCH Pattern Number				Reserved			
7	Sub-slot Number		Temporary LCH Number					
8	LCH Request Timing	Assignment PRU Number						
9	Shift Direction Control Information							
10	Reserved		Power Control Information					
11	TCCH Pattern Number				ICH Offset			
12	ICH Period							

Table 5.43 Information Elements in "LCH Assignment Standby" Message

Sub-slot Number (Octet 2, 7)

Sub-slot number indicates timing used by UL TCCH as shown in Sections 3.5.5 of OFDMA and 3.6.6 of SC.

Bit 8	7	
0	0	Sub-slot number 1
0	1	Sub-slot number 2
1	0	Sub-slot number 3
1	1	Sub-slot number 4

Temporary LCH Number (Octet 2, 7)

Temporary LCH number indicates temporary number to establish link channel.

Bit 6	5	4	3	2	1	
0	0	0	0	0	0	Temporary LCH number = 0
0	0	0	0	0	1	Temporary LCH number = 1
0	0	0	0	1	0	Temporary LCH number = 2
		:				:
1	1	1	1	1	1	Temporary LCH number = 63

LCH Request Timing (Octet 3, 8)

LCH request timing indicates LCCH timing of UL TCCH.

Bit 8	
0	UL TCCH timing before 625us x the number of UL slots
1	UL TCCH timing before LCCH Interval value n x frame length (ms) + 625us x the number of UL slot

Cause (Octet 3)

Cause indicates standby reason.

Bit 5	4	3	2	1	
0	0	0	0	0	Reserved
0	0	0	0	1	All BS slots in use
0	0	0	1	0	No BS free channel
0	0	0	1	1	No free outgoing line on wire side
0	0	1	0	0	LCH type disagreement
0	0	1	0	1	Traffic restriction
0	0	1	1	0	Relevant BS use impossible (zone selection impossible)
		Other			Reserved

TCCH Pattern Number (Octet 6, 11)

TCCH pattern number indicates the core-sequence number of UL TCCH used as shown in Appendix D. "LCH assignment message (Octet 7 - 12) absent " can be set only to TCCH pattern of Octet 11.

Bit 8	7	6	5	
0	0	0	0	Core-sequence number 1 for OFDMA
0	0	0	1	Core-sequence number 2 for OFDMA
0	0	1	0	Core-sequence number 3 for OFDMA
0	0	1	1	Core-sequence number 4 for OFDMA
0	1	0	0	Core-sequence number 5 for OFDMA
0	1	0	1	Core-sequence number 6 for OFDMA
0	1	1	0	Core-sequence number 1 for SC
0	1	1	1	Core-sequence number 2 for SC
1	0	0	0	Core-sequence number 3 for SC
1	0	0	1	Core-sequence number 4 for SC
1	0	1	0	Core-sequence number 5 for SC
1	0	1	1	Core-sequence number 6 for SC
	:			:
1	1	1	0	Sub-slot number absent
1	1	1	1	LCH assignment message (Octet 7-12) absent

Assignment PRU Number (Octet 8)

Assignment PRU number indicates assigned number for PRU.

Bit 7	6	5	4	3	2	1	
0	0	0	0	0	0	0	Assignment PRU number = 1
0	0	0	0	0	0	1	Assignment PRU number = 2
0	0	0	0	0	1	0	Assignment PRU number = 3
			:				:
1	1	1	1	1	1	1	Assignment PRU number = 128

Shift Direction Control Information (Octet 9)

Shift direction control information indicates control information of UL transmission timing for MS.

Bit 8	7	6	5	4	3	2	1	
0	0	0	0	0	0	0	0	Stay
0	0	0	0	0	0	0	1	1 step forward
0	0	0	0	0	0	1	0	2 steps forward
0	0	0	0	0	0	1	1	3 steps forward
			:					:
1	1	1	1	1	1	1	1	255 steps forward

(Note) Unit = -4 × 30 / (512 + 64) us

Power Control Information (Octet 10)

Power control information indicates control information of UL transmission power for MS.

Bit 6	5	4	3	2	1	
0	1	1	1	1	1	31 steps increase
0	1	1	1	1	0	30 steps increase
			:			
0	0	0	0	1	0	2 steps increase
0	0	0	0	0	1	1 step increase
0	0	0	0	0	0	Hold
1	1	1	1	1	1	1 step decrease
1	1	1	1	1	0	2 steps decrease
			:			:
1	0	0	0	0	1	31 steps decrease
1	0	0	0	0	0	32 steps decrease

(Note) Unit = 3 dB

ICH Offset (Octet 11)

The frame used with ICH is indicated by the offset of CCH from the TDMA frame.
Refer to Section 5.2.3.10 for intermittent transmission timing of ICH offset.
When intermittent transmission timing information of ICH is not needed, "no offset" is set.

Bit 4	3	2	1	
0	0	0	0	No offset
0	0	0	1	TDMA frame after 1 frame from CCH
0	0	1	0	TDMA frame after 2 frames from CCH
0	0	1	1	TDMA frame after 3 frames from CCH
	:			:
1	1	1	1	TDMA frame after 15 frames from CCH

ICH Period (Octet 12)

The cycle of the TDMA frame that ICH uses is indicated.

Refer to Section 5.2.3.10 for intermittent transmission timing of ICH period.

When intermittent transmission timing information of ICH is not needed, "no scheduling" is set.

ICH Offset ≤ ICH Period – 1 frame

Bit 8	7	6	5	
0	0	0	0	No scheduling
0	0	0	1	2 frames
0	0	1	0	3 frames
0	0	1	1	4 frames
	:			:
1	1	1	1	16 frames

5.5.6.1.6 "LCH Assignment Reject" Message

BS uses this message to inform that channel setup is not possible in response to a link channel (re-)request from MS. The message format is shown in Table 5.44, and the explanation of information elements is shown in Table 5.45.

Table 5.44 "LCH Assignment Reject" Message

Message type : "LCH assignment reject" message
Direction : BS → MS (DL)
Function channel : SCCH

Octet \ Bit	8	7	6	5	4	3	2	1
1	0	1	0	1	Reserved			
	Message Type							
2	Sub-slot Number		Temporary LCH Number					
3	LCH Request Timing	Reserved		Cause				
4	Reserved							
5								
6	TCCH Pattern Number				Reserved			
7	Sub-slot Number		Temporary LCH Number					
8	LCH Request Timing	Assignment PRU Number						
9	Shift Direction Control Information							
10	Reserved		Power Control Information					
11	TCCH Pattern Number				ICH Offset			
12	ICH Period							

Table 5.45 Information Elements in "LCH Assignment Reject" Message

Sub-slot Number (Octet 2, 7)

Sub-slot number indicates timing used by UL TCCH as shown in Sections 3.5.5 of OFDMA and 3.6.6 of SC.

Bit 8	7	
0	0	Sub-slot number 1
0	1	Sub-slot number 2
1	0	Sub-slot number 3
1	1	Sub-slot number 4

Temporary LCH Number (Octet 2, 7)

Temporary LCH number indicates temporary number to establish link channel.

Bit 6	5	4	3	2	1	
0	0	0	0	0	0	Temporary LCH number = 0
0	0	0	0	0	1	Temporary LCH number = 1
0	0	0	0	1	0	Temporary LCH number = 2
		:				:
1	1	1	1	1	1	Temporary LCH number = 63

LCH Request Timing (Octet 3, 8)

LCH request timing indicates LCCH timing of UL TCCH.

Bit 8	
0	UL TCCH timing before 625us x the number of UL slots
1	UL TCCH timing before LCCH Interval value n x frame length (ms) + 625us x the number of UL slot

Cause (Octet 3)

Cause indicates rejected reason.

Bit 5	4	3	2	1	
0	0	0	0	0	Reserved
0	0	0	0	1	All BS slots in use
0	0	0	1	0	No BS free channel
0	0	0	1	1	No free outgoing line on wire side
0	0	1	0	0	LCH type disagreement
0	0	1	0	1	Traffic restriction
0	0	1	1	0	Relevant BS use impossible (zone selection impossible)
		Other			Reserved

TCCH Pattern Number (Octet 6, 11)

TCCH pattern number indicates the core-sequence number of UL TCCH used as shown in Appendix D. "LCH assignment message (Octet 7 - 12) absent " can be set only to TCCH pattern of Octet 12.

Bit 8	7	6	5	
0	0	0	0	Core-sequence number 1 for OFDMA
0	0	0	1	Core-sequence number 2 for OFDMA
0	0	1	0	Core-sequence number 3 for OFDMA
0	0	1	1	Core-sequence number 4 for OFDMA
0	1	0	0	Core-sequence number 5 for OFDMA
0	1	0	1	Core-sequence number 6 for OFDMA
0	1	1	0	Core-sequence number 1 for SC
0	1	1	1	Core-sequence number 2 for SC
1	0	0	0	Core-sequence number 3 for SC
1	0	0	1	Core-sequence number 4 for SC
1	0	1	0	Core-sequence number 5 for SC
1	0	1	1	Core-sequence number 6 for SC
	:			:
1	1	1	0	Sub-slot number absent
1	1	1	1	LCH assignment message (Octet 7-12) absent

Assignment PRU Number (Octet 8)

Assignment PRU number indicates assigned number for PRU.

Bit 7	6	5	4	3	2	1	
0	0	0	0	0	0	0	Assignment PRU number = 1
0	0	0	0	0	0	1	Assignment PRU number = 2
0	0	0	0	0	1	0	Assignment PRU number = 3
			:				:
1	1	1	1	1	1	1	Assignment PRU number = 128

Shift Direction Control Information (Octet 9)

Shift direction control information indicates control information of UL transmission timing for MS.

Bit 8	7	6	5	4	3	2	1	
0	0	0	0	0	0	0	0	Stay
0	0	0	0	0	0	0	1	1 step forward
0	0	0	0	0	0	1	0	2 steps forward
0	0	0	0	0	0	1	1	3 steps forward
				:				:
1	1	1	1	1	1	1	1	255 steps forward

(Note) Unit = -4 × 30 / (512 + 64) us

Power Control Information (Octet 10)

Power control information indicates control information of UL transmission power for MS.

Bit 6	5	4	3	2	1	
0	1	1	1	1	1	31 steps increase
0	1	1	1	1	0	30 steps increase
			:			
0	0	0	0	1	0	2 steps increase
0	0	0	0	0	1	1 step increase
0	0	0	0	0	0	Hold
1	1	1	1	1	1	1 step decrease
1	1	1	1	1	0	2 steps decrease
			:			:
1	0	0	0	0	1	31 steps decrease
1	0	0	0	0	0	32 steps decrease

(Note) Unit = 3 dB

ICH Offset (Octet 11)

The frame used with ICH is indicated by the offset of CCH from the TDMA frame.
Refer to Section 5.2.3.10 for intermittent transmission timing of ICH offset.
When intermittent transmission timing information of ICH is not needed, "no offset" is set.

Bit 4	3	2	1	
0	0	0	0	No offset
0	0	0	1	TDMA frame after 1 frame from CCH
0	0	1	0	TDMA frame after 2 frames from CCH
0	0	1	1	TDMA frame after 3 frames from CCH
	:			:
1	1	1	1	TDMA frame after 15 frames from CCH

ICH Period (Octet 12)

The cycle of the TDMA frame that ICH uses is indicated.
Refer to Section 5.2.3.10 for intermittent transmission timing of ICH period.
When intermittent transmission timing information of ICH is not needed, "no scheduling" is set.

ICH Offset ≤ ICH Period – 1 frame

Bit 8	7	6	5	
0	0	0	0	No scheduling
0	0	0	1	2 frames
0	0	1	0	3 frames
0	0	1	1	4 frames
	:			:
1	1	1	1	16 frames

5.5.6.2 UL SCCH

The format of message type for UL SCCH is shown in Table 5.46, and the coding is shown in Table 5.47.

Table 5.46 Format of Message Type for UL SCCH

Octet \ Bit	8	7	6	5	4	3	2	1
1	Message Type				Reserved			

Table 5.47 Message Type Coding for UL SCCH

Bit 8	7	6	5	
0	0	1	0	"LCH assignment re-request" message
Other				Reserved

5.5.6.2.1 "LCH Assignment Re-request" Message

MS can use this message for LCH re-assignment after a LCH assignment message from BS is received. The message format is shown in Table 5.48, and the explanation of information elements is shown in Table 5.49.

Table 5.48 "LCH Assignment Re-request" Message

Message type : "LCH Assignment re-request" message
Direction : BS ← MS (UL)
Function channel : SCCH

Octet \ Bit	8	7	6	5	4	3	2	1
1	0	0	1	0	Reserved			
	Message Type							
2	Reserved		Temporary LCH Number					
3	Reserved			Cause				
4	TDMA Slot							

Table 5.49 Information Elements in "LCH Assignment Re-request" Message

Temporary LCH Number (Octet 2)
Temporary LCH number indicates temporary number to establish link channel.

Bit 6	5	4	3	2	1	
0	0	0	0	0	0	Temporary LCH number = 0
0	0	0	0	0	1	Temporary LCH number = 1
0	0	0	0	1	0	Temporary LCH number = 2
		:				:
1	1	1	1	1	1	Temporary LCH number = 63

Cause (Octet 3)

Cause indicates re-request reason.

Bit 5	4	3	2	1	
0	0	0	0	0	Reserved
0	0	0	0	1	Assignment PRU use not possible
0	0	0	1	0	Assignment PRU non-corresponding MS
0	0	0	1	1	Assignment Scheduling term not possible
0	0	1	0	0	Request for assignment PRU
0	0	1	0	1	Notified MIMO Type use not possible (UL)
0	0	1	1	0	Notified MIMO Type use not possible (DL)
0	0	1	1	1	Notified MIMO Type use not possible (UL & DL)
		Other			Reserved

TDMA Slot (Octet 4)

This information element indicates the TDMA slot that MS can use.

Bit 8	7	6	5	
-	-	-	1/0	1st TDMA slot can be / not used.
-	-	1/0	-	2nd TDMA slot can be / not used.
-	1/0	-	-	3rd TDMA slot can be / not used.
1/0	-	-	-	4th TDMA slot can be / not used.

Chapter 6 Channel Assignment

6.1 Overview

This chapter describes the link establishment control, the channel assignment control and the connection control specification for radio-link. In Section 6.2, link establishment control is described. Channel assignment control is described in Section 6.3; and connection control is described in Section 6.4. Section 6.4 also defines the two channel access modes called “Fast access channel based on MAP mode (FM-Mode)” and “high Quality channel based on carrier sensing mode (QS-Mode)”. FM-Mode is used for high-speed packet access. PRUs of EXCH are shared among MSs in FM-Mode. QS-Mode is used mainly for applications which require guaranteed bandwidth or low latency. One PRU is dedicatedly assigned to one MS while the data traffic is continued in QS-Mode. Radio state management is defined in Section 6.5; and parameters introduced in this chapter are summarized in Section 6.9.

6.2 Link Establishment Control

The sequences of incoming call and outgoing call are shown in Figure 6.1 and Figure 6.2.

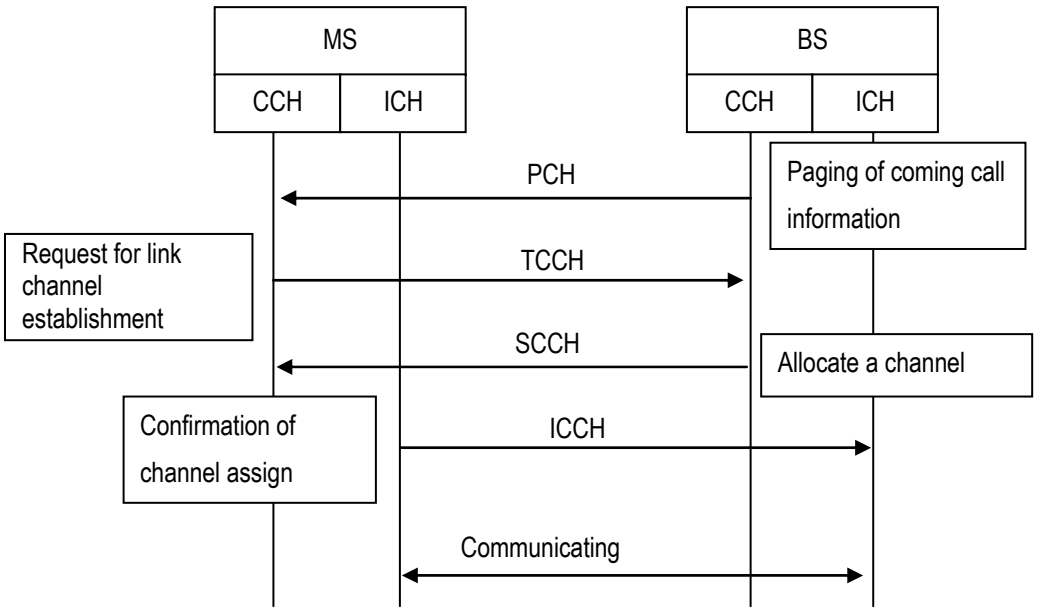

Figure 6.1 Incoming Call Sequence

The sequence of an incoming call is initiated by BS's transmitting PCH to MS. PCH includes information on the MS being paged. By receiving the PCH from BS, MS is informed of the incoming call, and is requested to respond to the PCH. The MS indicated by the PCH transmits TCCH as "LCH assignment request" message in UL CCH. MS shall choose one pattern using random logic from 24 patterns consisting of Sub-slot (4 patterns) and Core-sequence number (6 patterns). Upon the reception of TCCH by the BS, the BS transmits DL SCCH to notify the allocation of a communication channel to the MS. DL SCCH transports information not only on the allocated channel but also on the transmission power and transmission timing that the MS should use. Note that the BS can only recognize the MS by TCCH rather than MSID. After receiving the channel allocation in response to the transmitted TCCH in the assigned communication channel, the MS transmits the allocation confirmation to the BS with the rectified transmission power and transmission timing.

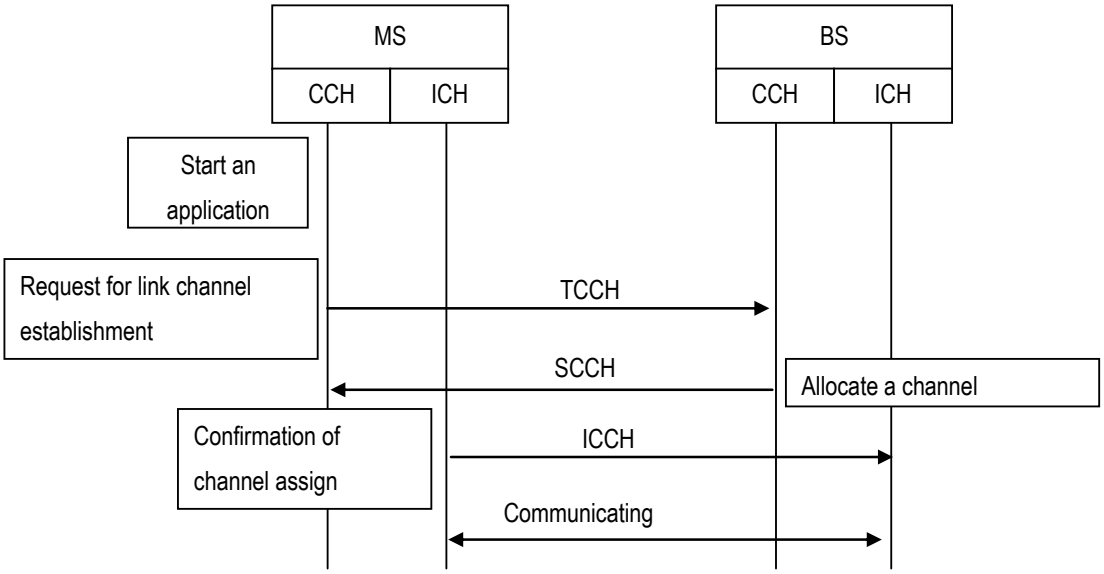

Figure 6.2 Outgoing Call Sequence

Outgoing call sequence is initiated by MS's transmitting TCCH in UL CCH. MS chooses one of four sub-slots within a slot to transmit the TCCH in the UL CCH. The details on the sub-slots are defined in Chapter 3. Not like the incoming call sequence, outgoing sequence can be initiated in an arbitrary UL CCH. Outgoing call sequence after the transmission of TCCH is the same as the incoming call sequence.

Even when the BS receives two or more TCCHs from two or more MSs simultaneously, the BS can allocate a communication channel to each MS, as long as the BS can recognize and identify each TCCH.

Figure 6.3 shows relation between LCH Assignment Request (TCCH) and LCH Assignment (SCCH). MS sends 2.5 ms or n * 5 + 2.5 ms before from downlink SCCH. Therefore, when a MS sends LCH Assignment Request at timing (1), then the BS responses its LCH Assignment (SCCH) at timing (2) or (3).

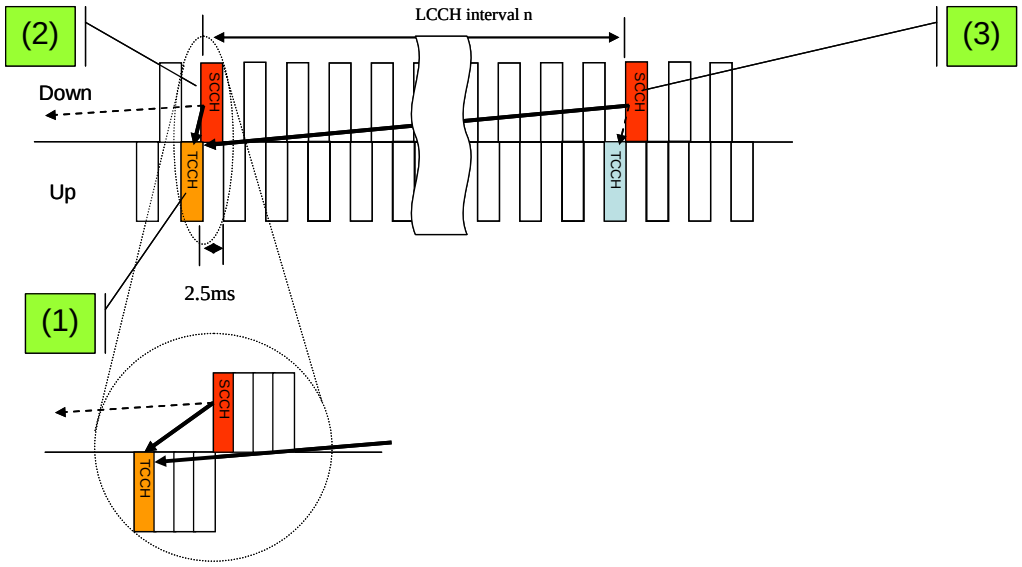

Figure 6.3 Relation between LCH Assignment Request (TCCH) and LCH Assignment (SCCH)

6.3 Channel Assignment Control

BS always performs UL carrier sensing on communication channels before they are allocated to MS. If a communication channel is regarded vacant by carrier sensing for a fixed period of time (four or more frames), it can be allocated to MS in DL SCCH after receiving the TCCH. At the allocated communication channel, the MS carries out DL carrier sensing for a fixed period of time (four or more frames) to confirm if the communication channel is vacant or not, by measuring the signal power. If the signal power is lower than defined threshold level, the MS transmits “link setup request” message in the communication channel.

When two or more MSs transmit the TCCH with the same pattern and the same sub-slot, the communication channel allocation in DL SCCH can be received by two or more MSs. In such a case, multiple MSs may transmit “link setup request” message simultaneously in the same communication channel. Assume that BS detects the “link setup request” message from one of these MSs, and that BS returns the “LCH assignment” message to the MS, then other MSs will not be able to receive the “link setup request” messages intended to them. Then these MSs, which did not receive the “link setup request” messages, will retransmit the “LCH assignment request” message on UL CCH.

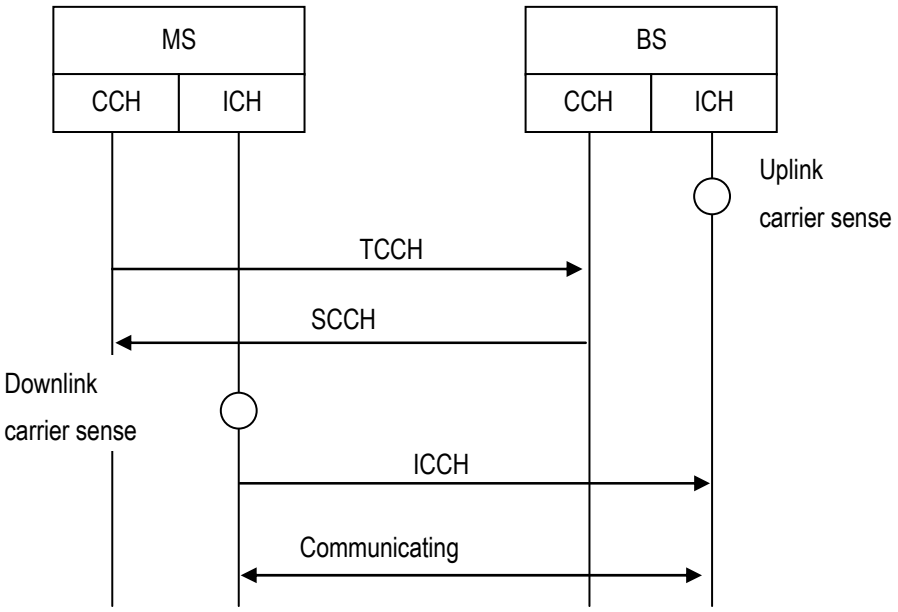

Figure 6.4 Channel Assign Control

6.4 Connection Control

6.4.1 FM-Mode

6.4.1.1 Connection Control

Figure 6.5 shows the overview of the FM-Mode. The figure shows two MSs [MS1 and MS2] accessing ICHs based on FM-Mode controlled by the BS. BS indicates the PRUs to MSs in active state through the MAP field in DL ECCH. When MS receives the MAP field, it receives the information of which PRUs can be used for communication. Then MS uses these PRUs for communication with the BS.

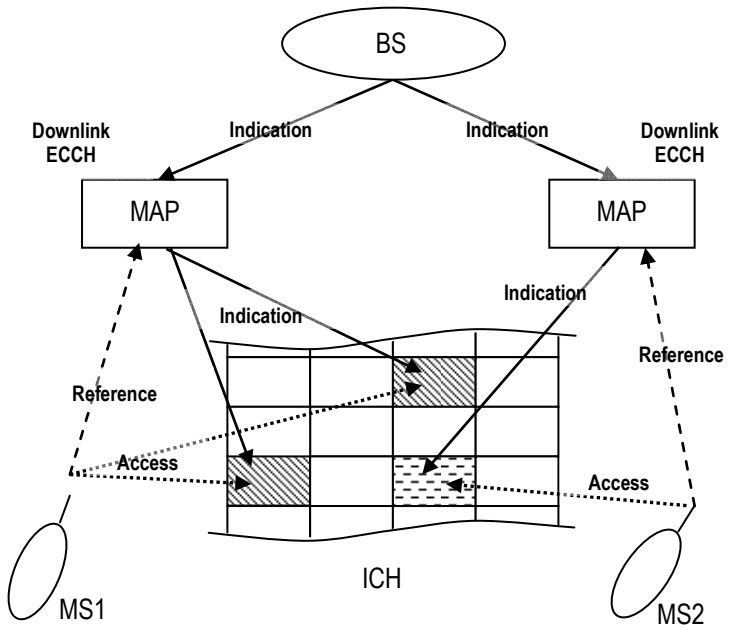

Figure 6.5 Connection Control of FM-Mode

For more information on the relationship between the MAP field and PRUs for FM-Mode, refer to Section 4.4.6.8.

BS assigns EXCHs to MS by sending MAP field on ECCH. Figure 6.6 shows an example of EXCHs assignment to two MSs. In this figure, MAP in the ANCH refers to the EXCH assigned to the MS with MAP. MS1 and MS2 are sharing the same PRUs for EXCH in this figure.

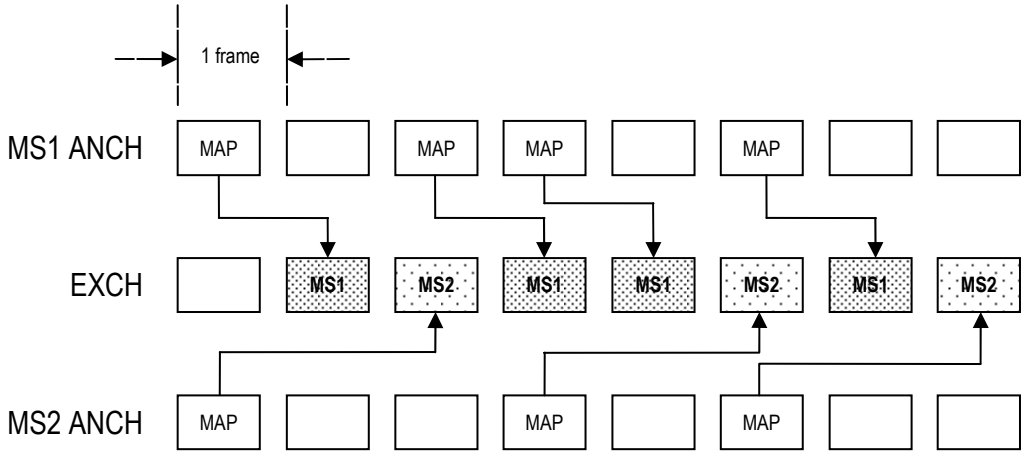

Figure 6.6 An Example of EXCH Assignment to Two MSs

6.4.1.1.1 Access Timing
6.4.1.1.1.1 Overview

According to the slot number of allocated ANCH and the MS's processing capability, access timing to use EXCH after the reception of MAP field is defined.
Access timings, exactly timing 1 and timing 2, are negotiated by messages and information elements in Access Establishment Phase. In addition, they are related on the number of slot in a frame. This section describes a definition of timing and a relation between their timing and frame structure.

6.4.1.1.1.2 5ms frame unit

MS should control timing 1 and 2 for ANCH as following in 5ms frame unit.
- Timing 1 : Informations on ANCH should be reflected in the next TDMA frame.
- Timing 2 : Informations on ANCH should be reflected in the second TDMA frame.

Figure 6.7 describes an example of relative timing of EXCH to ANCH in case of timing 1 for 5ms frame unit, in which the allocated EXCH is used by the MS in the next TDMA frame after the MAP is received on the DL ANCH.
Figure 6.8 describes an example of relative timing of EXCH to ANCH in case of timing 2 for 5ms frame unit, in which the allocated EXCH is used by the MS in the second nextTDMA frame after the MAP is received on the DL ANCH. In the figures, ANCH can be allocated in any of DL TDMA slots. The access frame in the figures indicates the TDMA frame where the communication access on the allocated EXCH is possible.

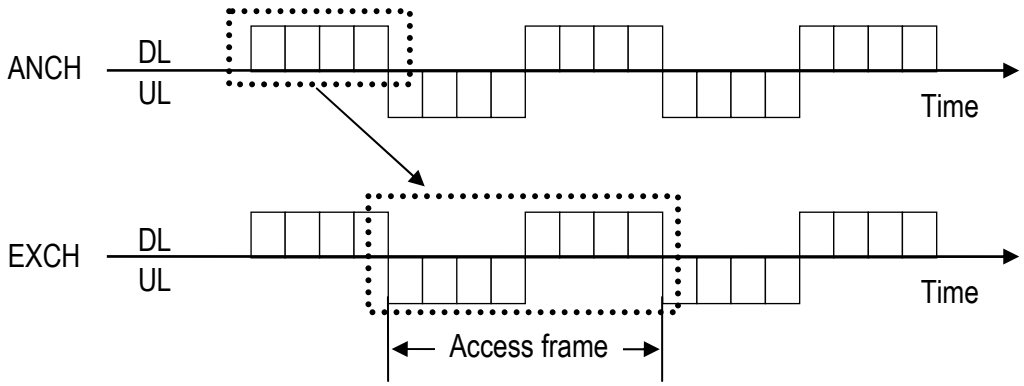

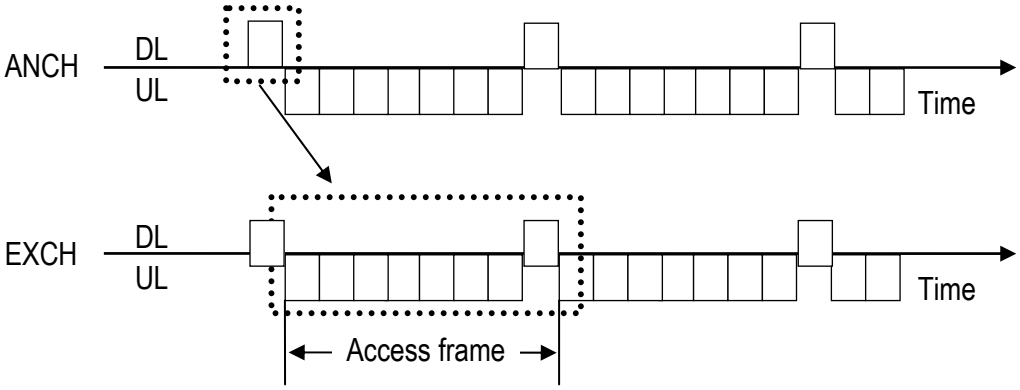

Figure 6.7 Timing 1 for 5ms frame

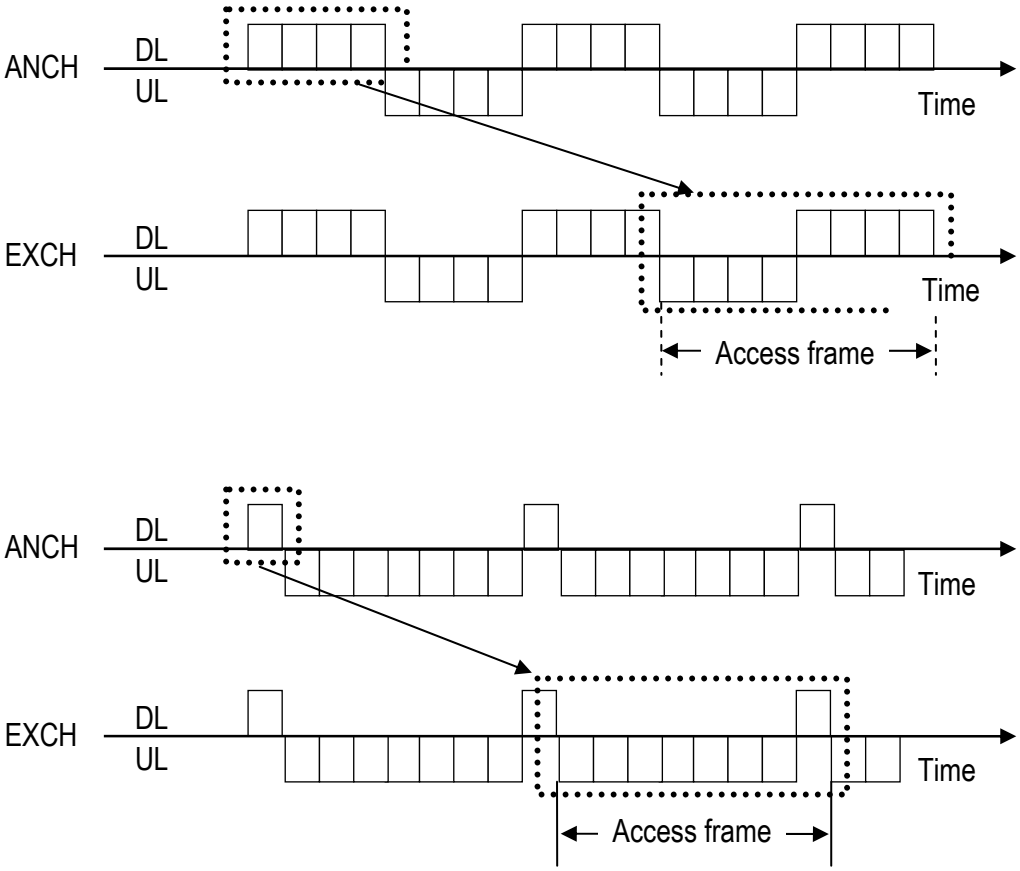

Figure 6.8 Timing 2 for 5ms frame

6.4.1.1.1.3 2.5ms frame unit

MS should control timing 1 and 2 for ANCH as following in 2.5ms frame unit.
- Timing 1 : Informations on ANCH should be reflected in the second TDMA frame.
- Timing 2 : Informations on ANCH should be reflected in the fourth TDMA frame.

Figure 6.9 describes an example of relative timing of EXCH to ANCH in case of timing 1 for 2.5ms frame unit, in which the allocated EXCH is used by the MS in the second next TDMA frame after the MAP is received on the DL ANCH.
Figure 6.10 describes an example of relative timing of EXCH to ANCH in case of timing 2 for 2.5ms frame unit, in which the allocated EXCH is used by the MS in the fourth next TDMA frame after the MAP is received on the DL ANCH. In the figures, ANCH can be allocated in any of DL TDMA slots. The access frame in the figures indicates the TDMA frame where the communication access on the allocated EXCH is possible.

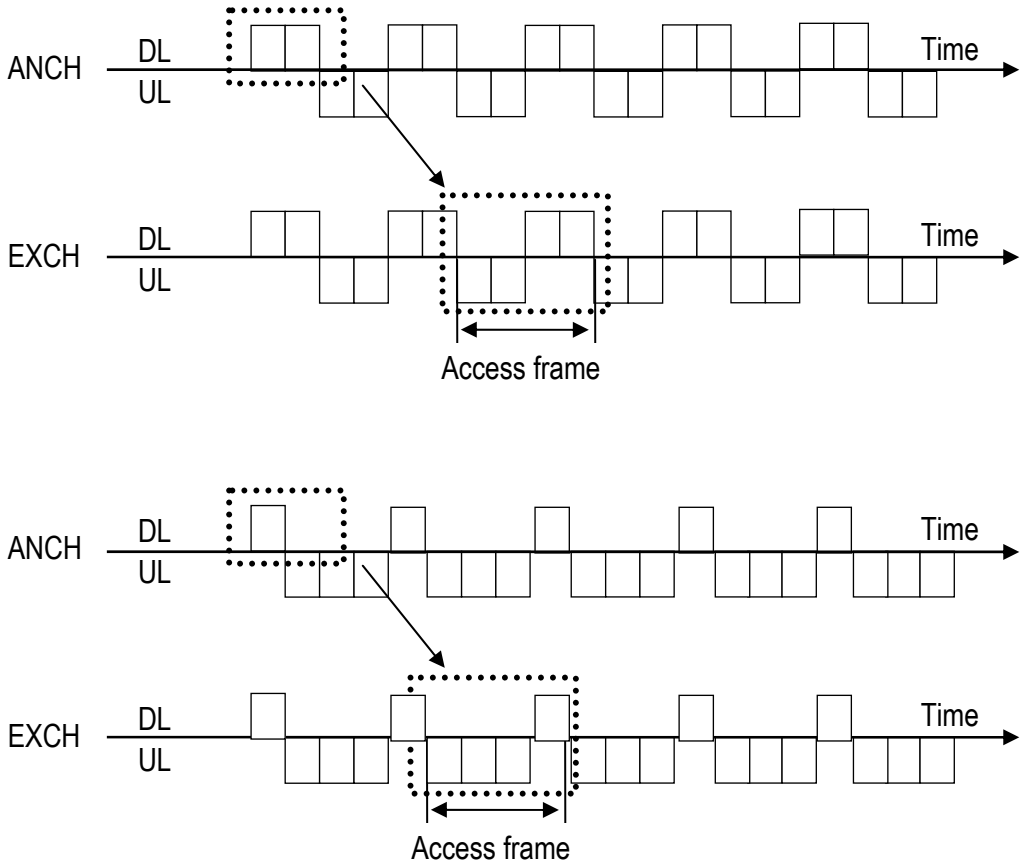

Figure 6.9 Timing 1 for 2.5ms frame

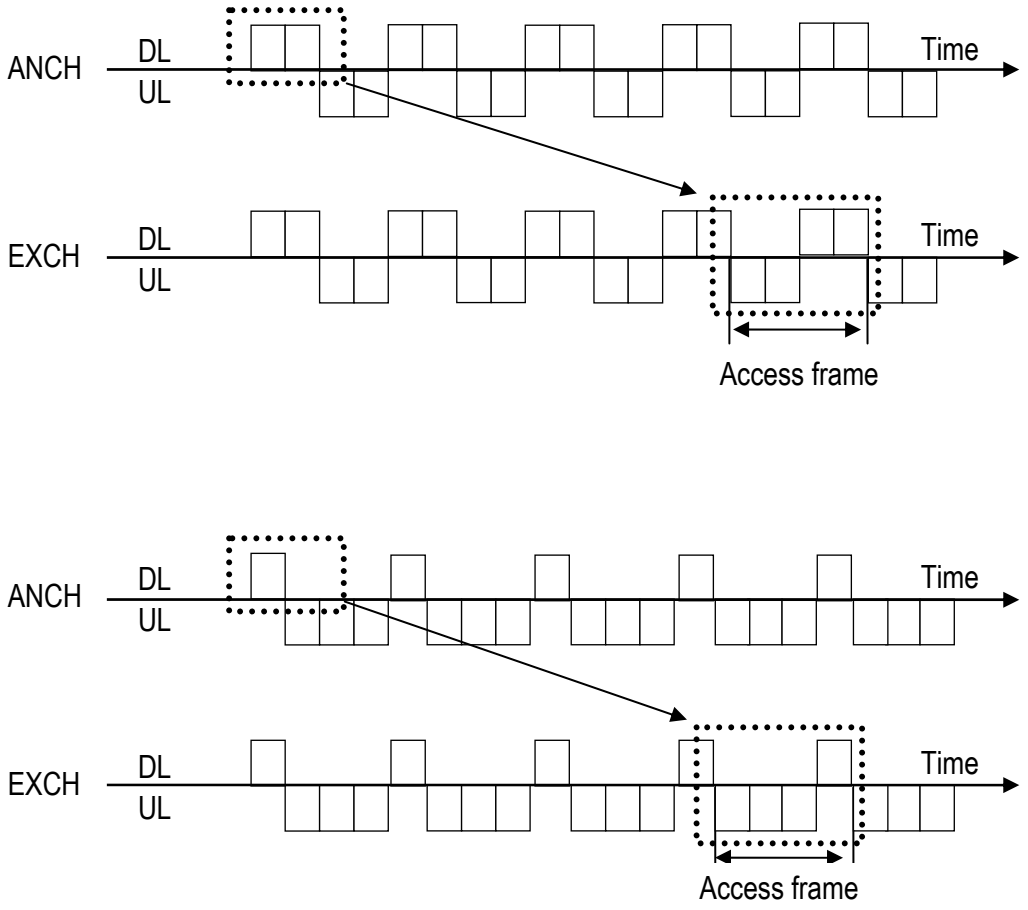

Figure 6.10 Timing 2 for 2.5ms frame

6.4.1.1.1.4 10ms frame unit

MS should control timing 1 and 2 for ANCH as following in 10ms frame unit.
- Timing 1 : Informations on ANCH should be reflected in the next TDMA frame.
- Timing 2 : Informations on ANCH should be reflected in the second TDMA frame.

Figure 6.11 describes an example of relative timing of EXCH to ANCH in case of timing 1 for 10ms frame unit, in which the allocated EXCH is used by the MS in the next TDMA frame after the MAP is received on the DL ANCH.
Figure 6.12 describes an example of relative timing of EXCH to ANCH in case of timing 2 for 10ms frame unit, in which the allocated EXCH is used by the MS in the second next TDMA frame after the MAP is received on the DL ANCH. In the figures, ANCH can be allocated in any of DL TDMA slots. The access frame in the figures indicates the TDMA frame where the communication access on the allocated EXCH is possible.

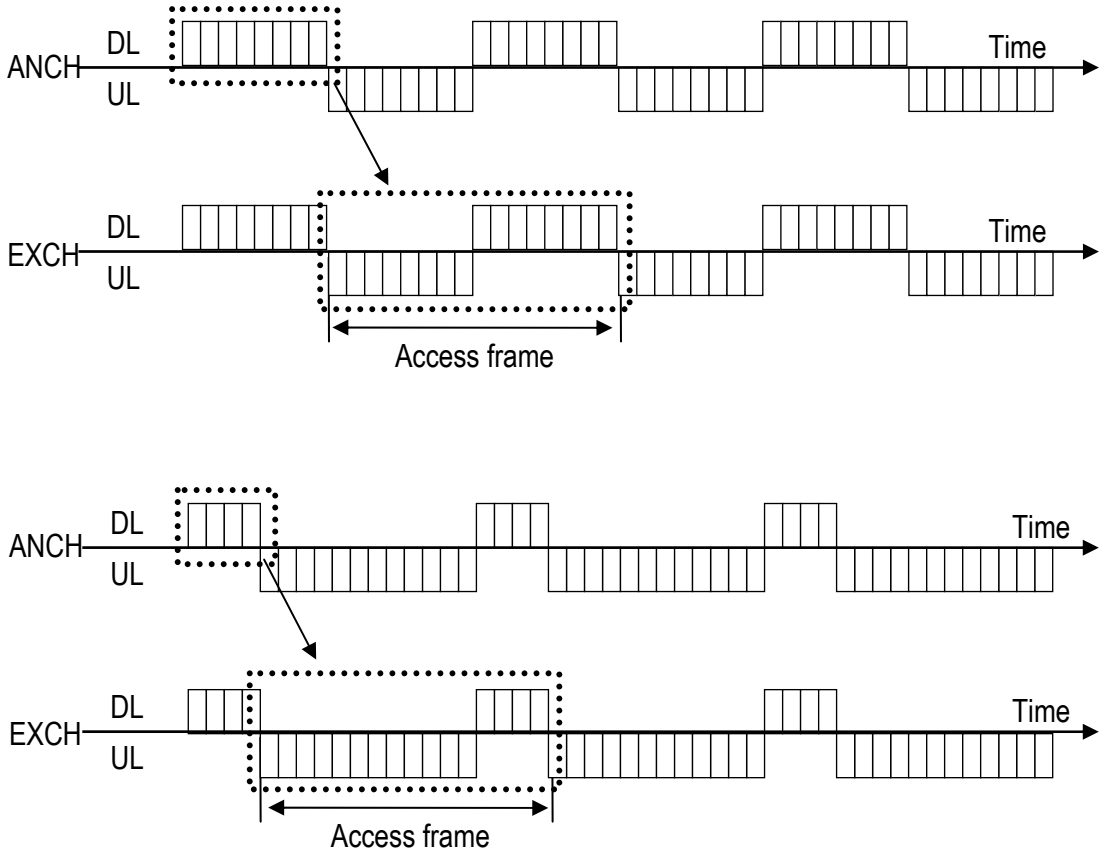

Figure 6.11 Timing 1 for 10ms frame

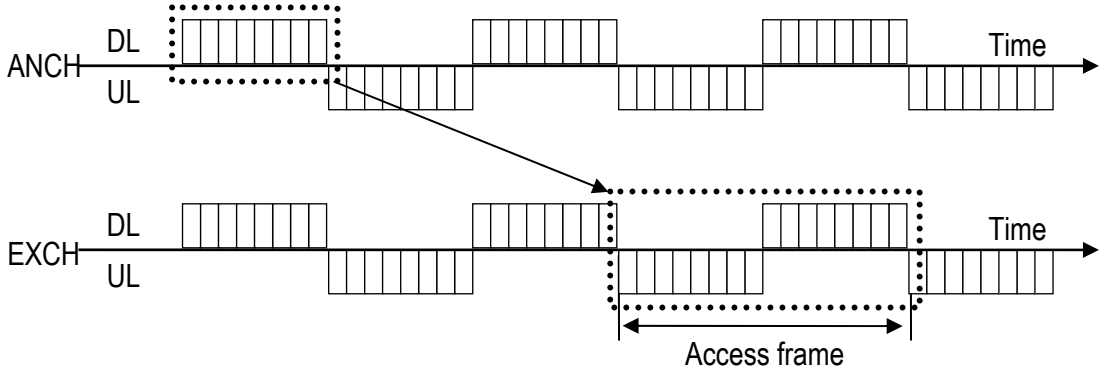

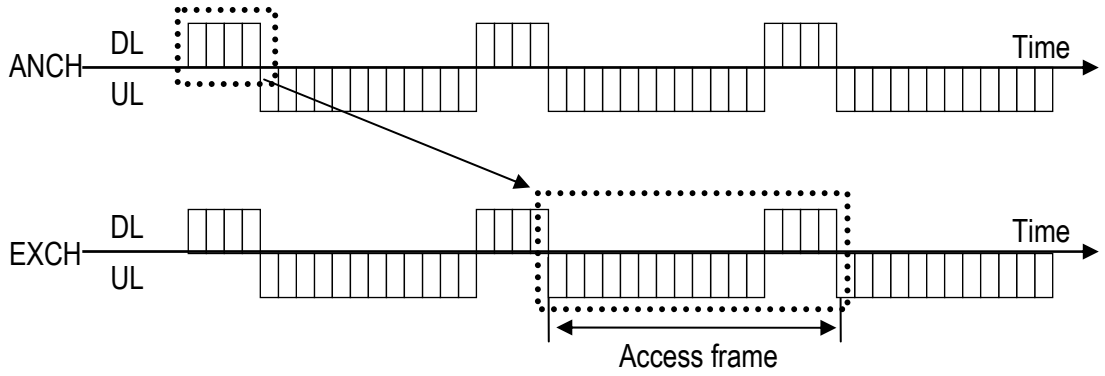

Figure 6.12 Timing 2 for 10ms frame

6.4.1.1.1.5 MS processing capabilities

Table 6.1 shows processing capabilities of different MSs.

Table 6.1 MS Processing Capabilities

	MS processing capabilities	Explanation
High ↑	Level 0	Processing completes during the guard time between TDD UL and DL. (51.67 us). MS can access the frame right after the MAP reception, it does not depend on the ANCH position.
	Level 1	MS can complete its processing within 1 TDMA slot (625 us), then transmit data in the UL TDMA slot.
	Level 2	MS cannot complete its processing within 1 TDMA slot but within 2 TDMA slots, then transmit data in the UL TDMA slot.
	Level 3	MS cannot complete its processing within 2 TDMA slots but within 3 TDMA slots, then transmit data in the UL TDMA slot.
↓ Low	Level 4	MS cannot complete its processing within 3 TDMA slots but within 4 TDMA slots, then transmit data in the UL TDMA slot.

The access timing is decided as shown in Table 6.2 by the processing capability of MS and the TDMA slot number of allocated ANCH. When TDMA frame structure is 2.5ms frame unit or the number of DL slot is under 4 slots, TDMA slot number of allocated ANCH adopts from the fourth to the first slot, in order. Example, when the number of DL slot is 2 slots, access timing for these UL slot is that first DL slot adopts a condition of “The Third Slot” and second DL slot adopts a condition of “The Fourth and Subsequent Slots”.
EXCH can be allocated to MS with a capability of timing 1 based on timing 2 when ANCH scheduling control is used as explained in Section 9.5.4.

Table 6.2 Access Timing

MS Processing Capability	The First Slot	The Second Slot	The Third Slot	The Fourth and Subsequent Slots
Level 0	Timing 1	Timing 1	Timing 1	Timing 1
Level 1	Timing 1	Timing 1	Timing 1	Timing 2
Level 2	Timing 1	Timing 1	Timing 2	Timing 2
Level 3	Timing 1	Timing 2	Timing 2	Timing 2
Level 4	Timing 2	Timing 2	Timing 2	Timing 2

6.4.1.1.2 Bandwidth Request by MS

When MS requests bandwidth to the BS, MS informs the transmit data size to BS using the RCH field in UL ANCH. According to the requested data size from the MS, BS reserves the bandwidth and informs bandwidth allocation through the MAP field on the DL ANCH.

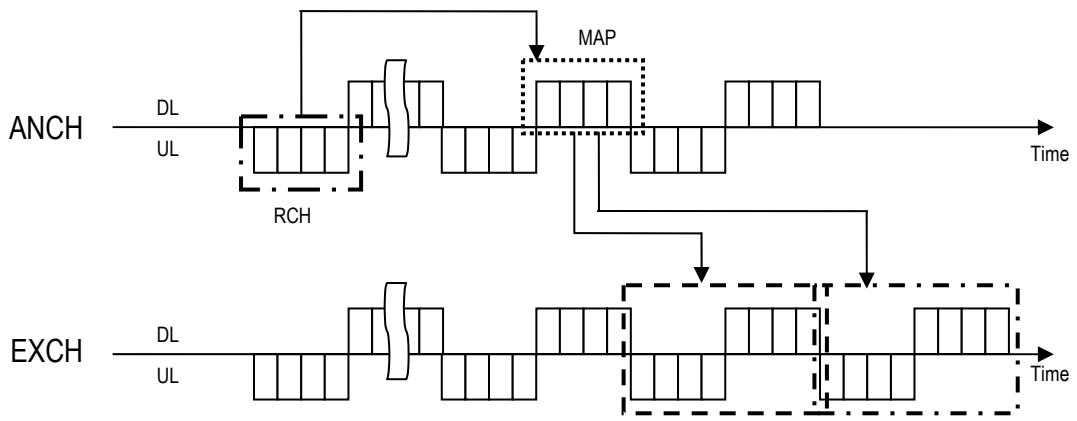

Figure 6.13 Bandwidth Allocation in Accordance with MS's Request

6.4.1.1.3 DL EXCH Holding Duration

DL EXCH will not be released during DL EXCH holding duration to avoid ANCH assignment by neighboring BSs, even when the DL EXCH is not used for information transmission. Figure 6.14 shows the relationship between the valid EXCH transmission and DL EXCH holding duration.

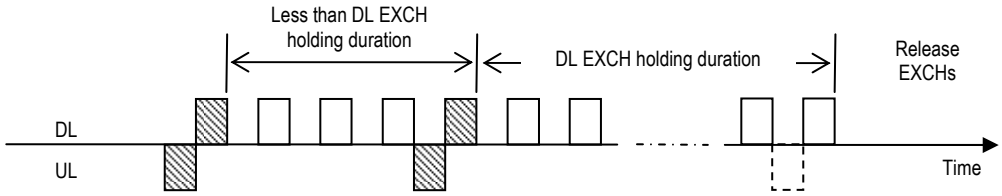

Figure 6.14 Maintenance Condition of DL EXCH

The hatched TDMA frames indicate EXCH which is used for information transfer. The plain frames indicate DL EXCH which is not used for information transfer to any MSs in active state. In these frames, BS may send idle burst on DL EXCH.
BS counts the number of frames from the last reception or transmission. When the count reaches DL EXCH holding duration, BS releases the allocated EXCH. BS will reset the count if data has been received or transmitted within DL EXCH holding duration.

6.4.1.2 Channel Selection

BS always carries out UL carrier sensing for unused PRUs in the entire bandwidth. The result of carrier sensing information will be used for channel selection.

6.4.1.2.1 Vacant PRU Judgment by UL Carrier Sensing

UL carrier sensing is carried out for UL EXCH monitoring time. Maximum value of UL carrier sensing will be used for the judgment of the vacant PRUs. UL EXCH monitoring time should be longer than DL EXCH holding duration. Based on this relationship, the neighbor BSs will avoid using the PRUs which are occupied. BS should monitor continuously for the UL EXCH monitoring time on all PRUs which the BS does not use in order to decide whether PRUs are vacant or occupied by other BSs. If the UL EXCH monitoring time is shorter than DL EXCH holding duration, then the neighbor BSs may regard a PRU which is actually occupied by EXCH, as a free PRU. Collisions will be caused if PRU is allocated to other MSs. Therefore, the UL EXCH monitoring time should be longer than the DL EXCH holding duration.

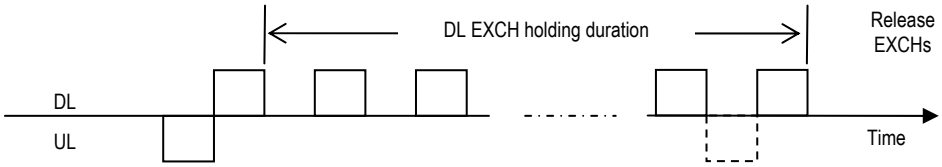

Figure 6.15 EXCH Release Timing

6.4.1.2.2 ANCH Allocation

BS allocates a vacant PRU for ANCH based on carrier sensing result when it receives ”LCH assignment request” message on the UL TCCH from a MS. It then transmits “LCH assignment response” message using DL SCCH in order to inform which PRU is assigned for ANCH to the MS. The BS’s decision on whether or not a PRU is vacant is made with regard to “UL RSSI threshold for ANCH selection”. The MS shall measure the power level on assigned PRU when it receives “LCH assignment response” message. The state of MS will move from idle state to active state if the result of the DL carrier sensing is lower than “DL RSSI threshold for ANCH selection”. The MS will send “LCH assignment re-request” message to the BS on the UL SCCH if the result of the DL carrier sensing is higher than “DL RSSI threshold for ANCH selection”. When the BS receives “LCH assignment re-request” message from the MS, it will carry out the channel selection procedure except for the previously allocated PRU.

When the average SINR of a PRU is lower than “ANCH/CSCH switch DL SINR threshold” in “extension function response” message, that condition is informed to BS using CQI. Details are described in Section 8.2.5.

6.4.1.2.3 EXCH Allocation

Figure 6.16 shows information about EXCH selection. It means the transmission on selecting PRUs for EXCH. Based on the UL carrier sensing and the CQI information from the MS, BS selects PRUs and informs MS by MAP field on ANCH. The BS’s decision on whether or not a PRU is vacant is made with regard to “UL RSSI threshold for EXCH selection”. MS calculates moving average of SINR, which refers to DL SINR calculation time, for each PRU assigned to the MS. CQI message is generated based on the average SINR calculated by MS.

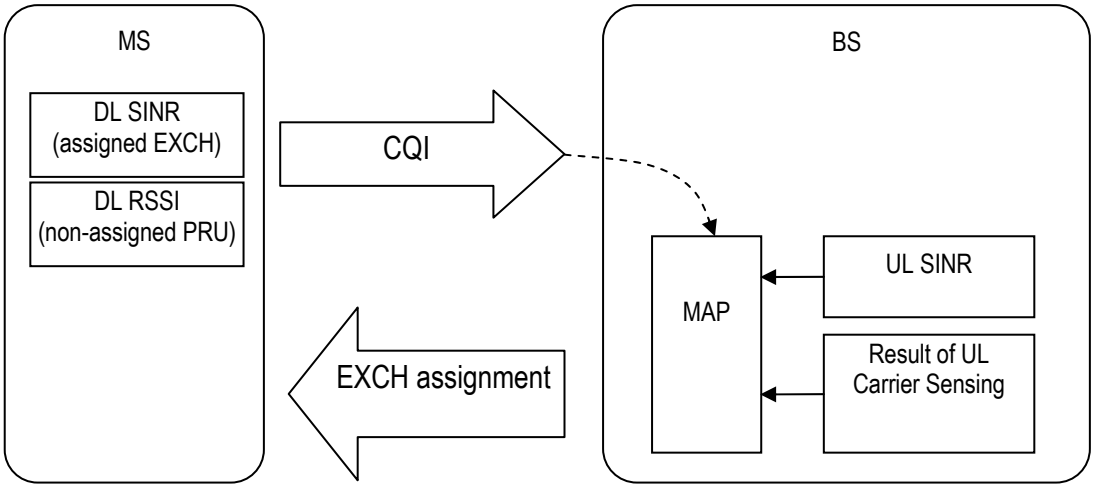

Figure 6.16 Notification of EXCH Channel Selection Information

The result of UL carrier sensing is used as the UL radio information when BS allocates vacant PRUs. Instead of allocating low-quality PRUs for the MS, BS will replace these with the higher-quality PRUs based on the CQI information. PRU, of which the UL carrier sensing result is lower than “UL RSSI threshold for EXCH selection”, is selected as a candidate PRU for allocation. PRU refused by CQI is not allocated by BS for the MS.

When the vacant PRU is used, judgment of vacancy will be done by making use of result of the UL carrier sensing as shown in Section 6.4.1.2.1.

BS calculates moving average of SINR, which refers to UL SINR calculation time, for every used PRU. When BS selects active PRU, it prioritizes PRUs which have high average SINR values. The refused PRUs notified in the CQI information are excluded from the selection.

6.4.2 QS-Mode

6.4.2.1 Channel Selection

BS always carries out UL carrier sensing for unused PRUs in the entire bandwidth. The result of carrier sensing information will be used for channel selection.

6.4.2.1.1 CSCH Allocation

When BS receives “LCH assignment request” message from the MS on the UL TCCH, it will allocate a vacant PRU and sends “LCH assignment response” message to MS on DL SCCH. The BS’s decision on whether or not a PRU is vacant is made with regard to “UL RSSI threshold for CSCH selection”. DL carrier sensing will be carried out on the designated PRU when MS receives “LCH assignment response” message. If the result of the DL carrier sensing is lower than “DL RSSI threshold for CSCH selection”, the state of MS will move from idle state to active state. If the result of the DL carrier sensing is higher than “DL RSSI threshold for CSCH selection”, the MS will send “LCH assignment re-request” message to the BS on the UL SCCH. BS will carry out the channel selection procedure except for the previously allocated PRU when the BS receives “LCH assignment re-request” message.

When the average SINR of a PRU is lower than “ANCH/CSCH switch DL SINR threshold” in “extension function response” message, that condition is informed to BS by CQI. Details are described in Section 8.2.5.

6.5 Radio State Management

Figure 6.17 describes the radio states of MS. MS has three states. They are idle state, active state and sleep state.

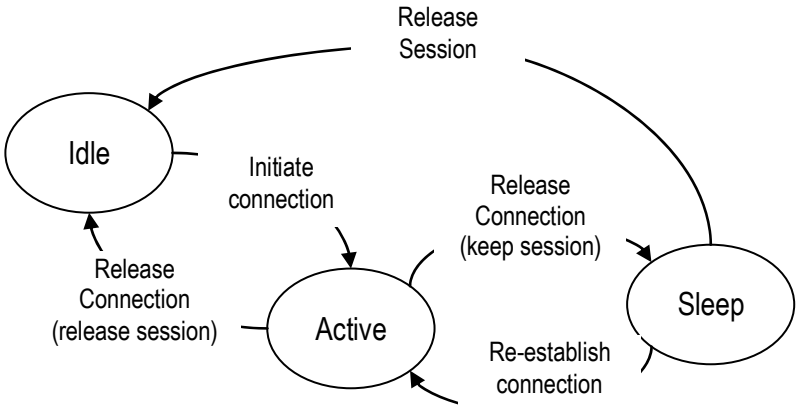

Figure 6.17 State Transition of MS

Table 6.3 States of MS

State Name	Radio Connection State	QCS State	State of MS
Idle	Nothing	Nothing	MS is waiting for paging messages.
Active	One or more	One or more	Data exchange with BS using ICH.
Sleep	Nothing	One or more	MS keeps QCS, but no ICH is established.

6.5.1 Idle State

Idle state is a state without radio connection and QCS.

In idle state, MS receives its own “paging” messages only on its PCH group. In time of incoming call or out-going call, MS in idle state is assigned an ICH from BS by SCCH and triggered to active state. The figure shows the sequence of an MS to move from idle state to active state.

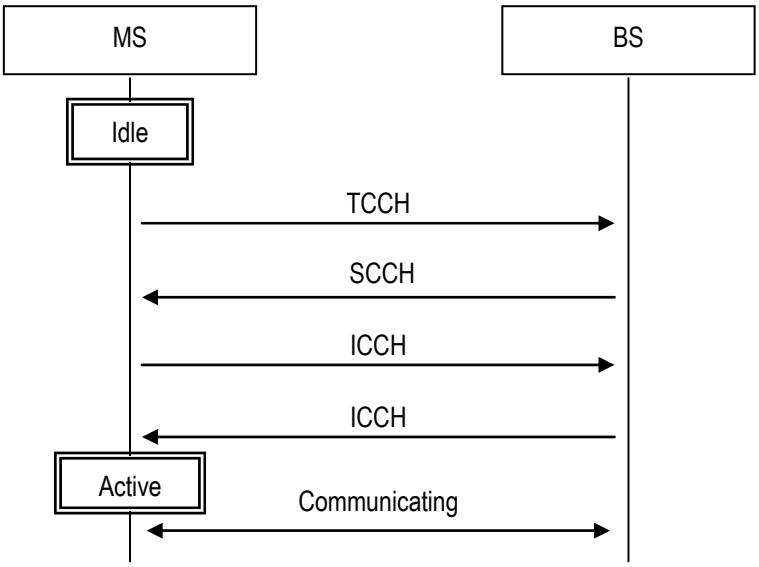

Figure 6.18 Move to Active State

MS transmits “LCH assignment request” message on TCCH to request ICH allocation. BS selects the vacant PRU from the result of the UL carrier sensing and informs the number of the allocated ICH through “LCH assignment response” message on DL SCCH. The BS’s decision on whether or not a PRU is vacant is made with regard to “UL RSSI threshold for ICCH selection”. MS carries out the DL carrier sensing on the specified PRU when it receives “LCH assignment response” message. MS will start transmission to the BS on this PRU if the result of the carrier sensing is lower than “DL RSSI threshold for ICCH selection”. Then the PRU is used as ICCH. It is considered that the radio connection between MS and BS is established when BS receives UL ICCH. MS will then perform initial radio settings to establish QCS and move itself to active state.

6.5.2 Active State

Active state is a state with one or more than one radio connections and QCSs.
In this state, MS can have one or more than one radio connections and QCSs. MS and BS can exchange data using the radio connections. BS supervises data transmission and the reception. If there is no data transmission and reception during sleep transfer time, BS releases all radio connections but holds QCS connections, and the state of MS moves to sleep state.
The change from active state to sleep is executed according to the following procedure.

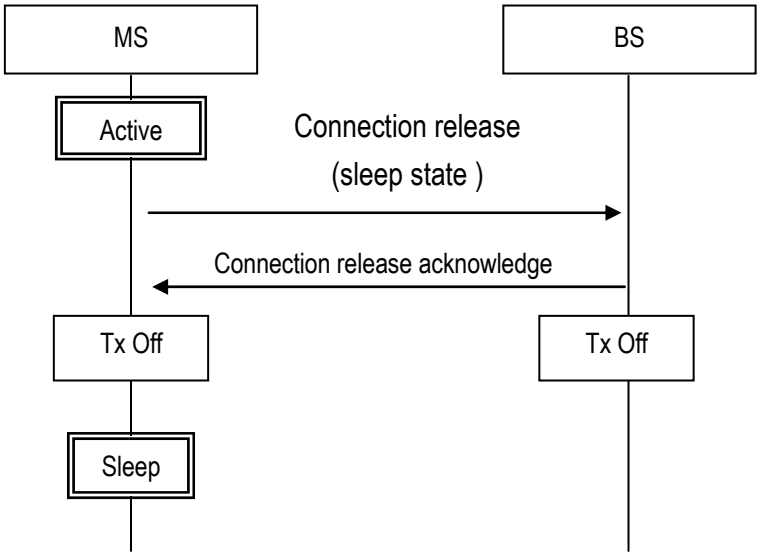

Figure 6.19 Move to Sleep State

When MS transmits UL data or receives DL data, data communication supervision timer is started. If there is data transmission or reception before timer expires, the timer will be restarted automatically. When data is not transmitted and received during sleep transfer time, data communication supervision timer will expire, and MS will send “connection release (sleep state)” message. BS transmits “connection release acknowledge” message when it receives the message. MS and BS will then release radio connection, and move to sleep state as shown in Figure 6.19.

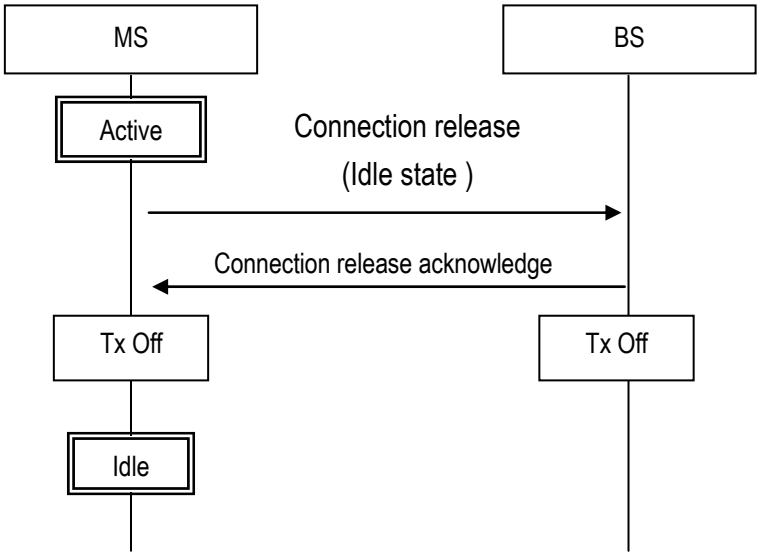

Figure 6.20 Move to Idle State

MS releases radio connection and QCS by “connection release (Idle state)” message when MS in active state has no data to exchange and it becomes unnecessary to maintain radio connection. MS will then move to idle state as shown in Figure 6.20.

6.5.3 Sleep State

Sleep state is a state which does not have radio connection but has QCS.
There is connection information between the BS and MS, despite that radio connection will be released. MS receives “paging” messages on PCH in sleep state. MS then transmits “LCH assignment request” message on TCCH to request ICH allocation. After MS re-establishes radio connection to BS and recovers QCS connection, it will move to active state and communication will be restarted.

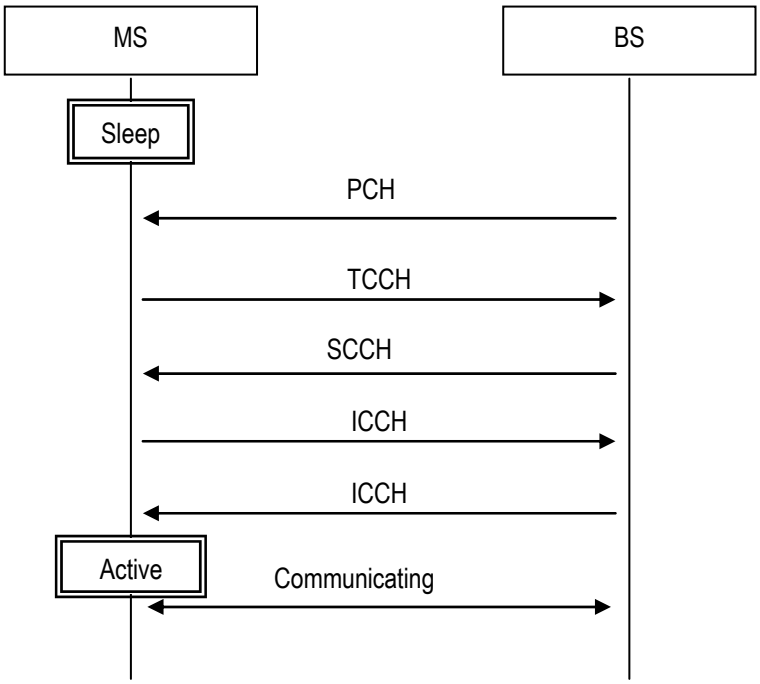

Figure 6.21 Recovery from Sleep State by DL Data Generation

When it becomes unnecessary for MS to maintain QCS, it releases QCS and moves itself to idle state.

6.6 Optional Radio State Management

A MS is in Active state when an radio connection has been established. If this is not the case, i.e. no radio connection is established, the MS is in IDLE state.

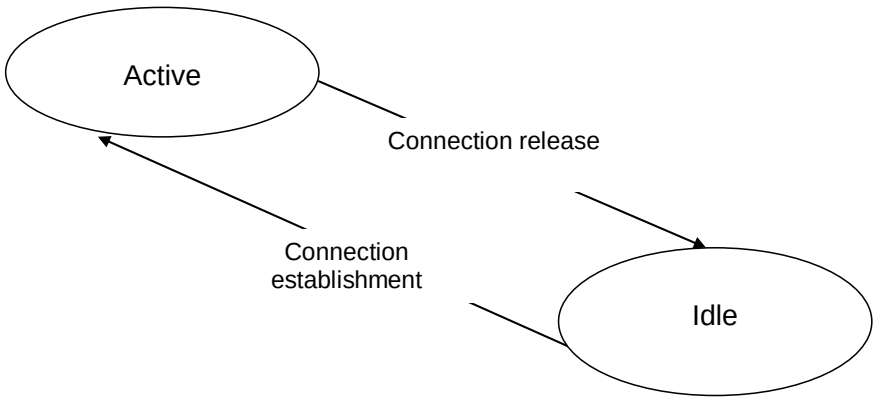

Figure 6.22 Recovery from Sleep State by DL Data Generation

6.6.1 Idle State

- A MS specific DRX may be configured by upper layers.
- MS controlled mobility;
- The MS:
    - Monitors a Paging channel to detect incoming calls, system information change;
    - Performs neighbouring cell measurements and cell (re-)selection;
    - Acquires system information.

6.6.2 Active State

- Transfer of unicast data to/from MS.
- At lower layers, the MS may be configured with a MS specific DRX.
- Network controlled mobility.
- The MS:
    - Monitors a Paging channel and/ or System Information Broadcasting Block Type 1 contents to detect system information change;
    - Monitors control channels associated with the shared data channel to determine if data is scheduled for it;
    - Provides channel quality and feedback information;

- Performs neighbouring cell measurements and measurement reporting;
- Acquires system information.

6.7 ICH continuation transmission

ICH continuation transmission is expected to improve linkbudget. The receiver, both of BS and MS, receives same ANCH and EXCH during several frames. The control of this function as start and stop can be required by both of BS and MS. The information elements for this function are added in ANCH/CSCH Switching Request, ANCH/CSCH Switching Indication and ANCH/CSCH Switching Re-request.

Figure 6.23 shows to ICH continuation transmission is switched from inactive to active by each MS and BS.

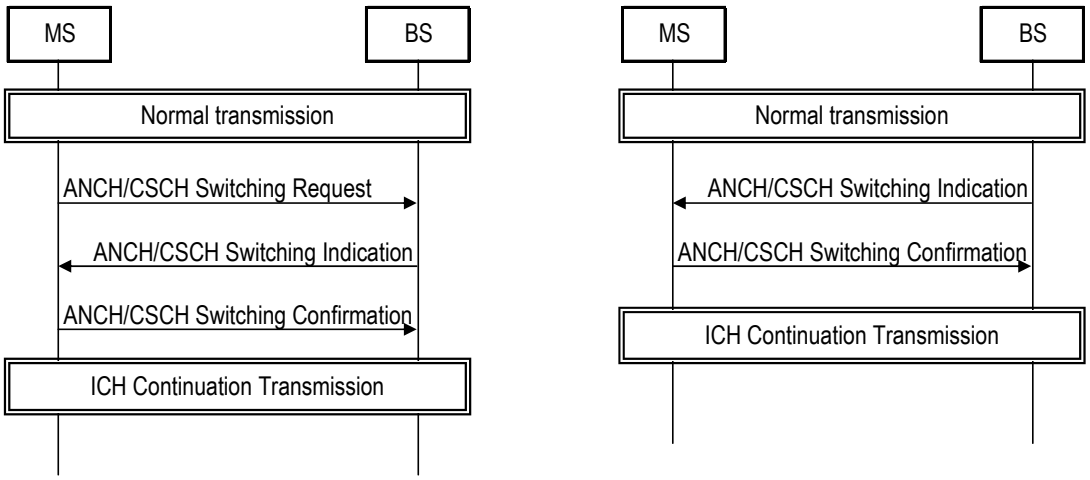

Figure 6.23 Control ICH Continuation transmission

6.8 Optional Random access procedure

The MS Access and establish the link to the network by optional Random Access (RA) procedure.

There are four messages for four steps of RA procedure and one message maps on one step.

The contention based random access procedure is described below:

The four steps of the contention based random access procedures are:

1) Random Access Sequence on ATCCH in uplink:

- There are two possible groups defined and one is optional. If both groups are configured the size of message 3 and the pathloss are used to determine which group a access sequence is selected from. The group to which a access sequence belongs provides an indication of the size of the message 3 and the radio conditions at the MS.

The access sequence group information along with the necessary thresholds are broadcast on system information.

2) Random Access Response generated by MSL1 on ADSCH:

- Semi-synchronous with message 1;
- No HARQ;
- Addressed to RA-MSID on ADECCH;
- Conveys at least RA access sequence identifier, Timing Alignment information, initial UL grant and assignment of Temporary C-MSID (which may or may not be made permanent upon Contention Resolution);
- Intended for a variable number of MSs in one ADSCH message.

3) First scheduled UL transmission on AUSCH:

- Uses HARQ;
- Size of the transport blocks depends on the UL grant conveyed in step 2 and is at least 80 bits.
- For initial access:
- Conveys the high layer Connection Request generated by the high layer layer and transmitted via ACCCH
- For high layer Connection Re-establishment procedure:
  - Conveys the high layer Connection Re-establishment Request generated by the high layer layer and transmitted via ACCCH;
- After handover, in the target cell:
  - Conveys the ciphered and integrity protected high layer Handover Confirm generated by the high layer layer and transmitted via ADCCH;
  - Conveys the C-MSID of the MS (which was allocated via the Handover Command);
- For other events:
  - Conveys at least the C-MSID of the MS.

4) Contention Resolution on DL:

- Not synchronised with message 3;
- HARQ is supported;
- Addressed to:
  - The Temporary C-MSID on ADECCH for initial access and after radio link failure;
  - The C-MSID on ADECCH for MS in high layer_CONNECTED;
- HARQ feedback is transmitted only by the MS which detects its own MS identity, as

provided in message 3, echoed in the Contention Resolution message;

The Temporary C-MSID is promoted to C-MSID for a MS which detects RA success and does not already have a C-MSID; it is dropped by others. A MS which detects RA success and already has a C-MSID, resumes using its C-MSID.

6.9 Summary of Parameters

Parameters used in Chapter 6 are summarized in Table 6.4 and Table 6.5.

Table 6.4 Parameters Related to Time Interval

Name	Description
UL EXCH Monitoring Time	Time interval during which BS continues UL carrier sensing preceding EXCH allocation
DL EXCH Holding Duration	Time interval during which BS holds EXCH even if the EXCH is not used for information transmission.
UL SINR Calculation Time	Time interval for which BS calculates moving average of UL SINR.
DL SINR Calculation Time	Time interval for which MS calculates moving average of DL SINR.
Sleep Transfer Time	Time interval which MS waits before moving to sleep state after the last transmission or reception took place.

Table 6.5 Parameters related to RSSI and SINR

Name	Description
UL RSSI Threshold for ANCH Selection	RSSI threshold which is compared to UL carrier sensing result preceding ANCH allocation
DL RSSI Threshold for ANCH Selection	RSSI threshold which is compared to DL carrier sensing result preceding ANCH allocation
UL RSSI Threshold for EXCH Selection	RSSI threshold which is compared to UL carrier sensing result preceding EXCH allocation
UL RSSI Threshold for CSCH Selection	RSSI threshold which is compared to UL carrier sensing result preceding CSCH allocation
DL RSSI Threshold for CSCH Selection	RSSI threshold which is compared to DL carrier sensing result preceding CSCH allocation

UL RSSI Threshold for ICCH Selection	RSSI threshold which is compared to UL carrier sensing result preceding ICCH allocation
DL RSSI Threshold for ICCH Selection	RSSI threshold which is compared to DL carrier sensing result preceding ICCH allocation
ANCH/CSCH switch UL SINR Threshold	If UL SINR is lower than this threshold, BS Origin ANCH/CSCH switch is triggered.
ANCH/CSCH switch DL SINR Threshold	If DL SINR is lower than this threshold, MS Origin ANCH/CSCH switch is triggered.

Chapter 7 Message Format and Information Elements

7.1 Overview

In this chapter, message formats in the access establishment phase after link assignment phase are described. Information elements for each message are also defined. These messages are transmitted or received on function channel such as ICCH, ACCH, EDCH or CDCH and the messages are mapped on MAC payload.

7.2 Message Format

7.2.1 Format Regulations

Figure 7.1 shows the basic message format. The protocol identifier is shown in the first octet, and message type is shown in the second octet. Message information are assigned from the 3rd octet. These message information are described in Section 7.3.
The protocol identifier is defined in Section 4.5.4. Table 7.1 shows the protocol identifier, which is defined as access establishment phase control.
Moreover, information element in message is shown as M or O. M is used in mandatory case in the message. O is used in optional case in the message.

Bit	8	7	6	5	4	3	2	1	
	Protocol Identifier								Octet 1
	1/0	1/0	1/0	1/0	1/0	1/0	1/0	1/0	
	Message Type								Octet 2
	0	1/0	1/0	1/0	1/0	1/0	1/0	1/0	
	Message Information								Octet 3~

Figure 7.1 Message Format

Table 7.1 Protocol Identifier

Protocol Type	Protocol Identifier							
Bit	8	7	6	5	4	3	2	1
Access Establishment Phase Control	0	0	0	0	0	0	1	0

7.2.2 Message Type

Table 7.2 shows the message types.

Table 7.2 Message Type List

Message Name	Reference	Message Type Bit Assign							
		8	7	6	5	4	3	2	1
Link Setup Request	7.2.2.1	0	0	0	0	0	0	0	1
Link Setup Response	7.2.2.3	0	0	0	0	0	0	1	0
Extension Function Request	7.2.2.4	0	0	0	0	0	0	1	1
Extension Function Response	7.2.2.5	0	0	0	0	0	1	0	0
Link Setup Request (SC)	7.2.2.2	0	0	0	0	0	1	0	1
Connection Request	7.2.2.6	0	0	0	0	1	0	0	0
Connection Response	7.2.2.7	0	0	0	0	1	0	0	1
ANCH/CSCH Switching Confirmation	7.2.2.8	0	0	1	0	0	0	0	0
ANCH/CSCH Switching Indication	7.2.2.9	0	0	1	0	0	0	0	1
ANCH/CSCH Switching Request	7.2.2.10	0	0	1	0	0	0	1	0
ANCH/CSCH Switching Rejection	7.2.2.11	0	0	1	0	0	0	1	1
ANCH/CSCH Switching Re-request	7.2.2.12	0	0	1	0	0	1	0	0
TDMA Slot Limitation Request	7.2.2.13	0	0	1	0	0	1	0	1
Additional LCH Confirmation	7.2.2.16	0	0	1	0	0	1	1	0
Additional LCH Indication	7.2.2.17	0	0	1	0	0	1	1	1
Additional QCS Request	7.2.2.18	0	0	1	0	1	0	0	0
Additional QCS Request Indication	7.2.2.19	0	0	1	0	1	0	0	1
Additional QCS Response	7.2.2.20	0	0	1	0	1	0	1	0
Additional QCS Rejection	7.2.2.21	0	0	1	0	1	0	1	1
Additional QCS Re-request	7.2.2.22	0	0	1	0	1	1	0	0
Connection Release	7.2.2.23	0	1	0	0	0	0	0	0
Connection Release Acknowledgement	7.2.2.24	0	1	0	0	0	0	0	1
QCS Release	7.2.2.25	0	1	0	0	0	0	1	0
QCS Release Acknowledgement	7.2.2.26	0	1	0	0	0	0	1	1
Authentication Information (1)	7.2.2.27	0	1	1	0	0	0	0	0
Authentication Information (2)	7.2.2.28	0	1	1	0	0	0	0	1
CQI Report	7.2.2.14	0	1	1	0	0	0	1	0
CQI Report Indication	7.2.2.15	0	1	1	0	0	0	1	1
Encryption Key Indication	7.2.2.29	0	1	1	0	0	1	0	0
QCS Status Enquiry Response	7.2.2.30	0	1	1	0	0	1	0	1
QCS Status Enquiry Request	7.2.2.31	0	1	1	0	0	1	1	0

7.2.2.1 Link Setup Request

This message is used for confirmation of BS assigned channel and notification of MSID. In addition, MS may notify channel type, and MS performance according to the requirement of network. (Note 1) This message is used in only OFDM mode.

Table 7.3 Link Setup Request Message Contents

Message Type : Link Setup Request
Significance : Local
Direction : UL
Function Channel : ICCH

Information Element	Reference	Direction	Type	Length	Remark
Protocol Identifier	7.2.1	UL	M	1	
Message Type	7.2.2	UL	M	1	
MSID	7.3.3.13	UL	M	6~9	
Protocol Version	7.3.3.14	UL	M	3	
Extension Function Sequence	7.3.2.3	UL	M	1	
Channel Type	7.3.2.1	UL	O	1	(Note 2)(Note 3)
MS Performance	7.3.3.12	UL	O	11~	(Note 3)
Extension Function Number	7.3.3.11	UL	O	3	(Note 3)

(Note 1) This message is not recommended to be transmitted dividedly in the MAC layer. The option information element that cannot be transmitted by "Link setup request" message should be send by "Extension function request" message.

(Note 2) MS notifies the available physical channel type for itself. BS notifies the physical channel actually assigned for the communication.

(Note 3) It is necessary to specify the execution of sequence by "extension function request" message, when it is impossible for data to be transmitted by “link setup request” message.

7.2.2.2 Link Setup Request (SC)

This message is used for confirmation of BS assigned channel and notification of MSID. This message is used in SC mode. Response message for the Link Setup Request (SC) is same as OFDM.

Table 7.4 Link Setup Request (SC) Message Contents

Message Type : Link Setup Request (SC)
Significance : Local
Direction : UL
Function Channel : ICCH

Information Element	Reference	Direction	Type	Length	Remark
Protocol Identifier	7.2.1	UL	M	1	
Message Type	7.2.2	UL	M	1	
MSID (SC)	7.3.3.23	UL	M	5/6/8	

7.2.2.3 Link Setup Response

This message is used for confirmation of channel type, communication parameter, etc.

Table 7.5 Link Setup Response Message Contents

Message Type : Link Setup Response
Significance : Local
Direction : DL
Function Channel : ICCH

Information Element	Reference	Direction	Type	Length	Remark
Protocol Identifier	7.2.1	DL	M	1	
Message Type	7.2.2	DL	M	1	
MSID	7.3.3.13	DL	M	6~9	
Protocol Version	7.3.3.14	DL	M	3	
Extension Function Sequence	7.3.2.3	DL	M	1	
Channel Type	7.3.2.1	DL	O	1	(Note 1)
Communication Parameter	7.3.3.6	DL	O	11~	(Note 2)

(Note 1) BS responds indispensably when channel type is transmitted with “link setup request” message.
(Note 2) BS responds indispensably when MS performance is transmitted with “link setup request” message.

7.2.2.4 Extension Function Request

This message is used for request of extension function.

Table 7.6 Extension Function Request Message Contents

Message Type : Extension Function Request
Significance : Local
Direction : UL
Function Channel : ICCH

Information Element	Reference	Direction	Type	Length	Remark
Protocol Identifier	7.2.1	UL	M	1	
Message Type	7.2.2	UL	M	1	
Channel Type	7.3.2.1	UL	O	1	(Note 1)
MS Performance	7.3.3.12	UL	O	11~	(Note 1)
Extension Function Number	7.3.3.11	UL	O	3	(Note 1)
Source BS-info	7.3.3.20	UL	O	7	(Note 2)
Power Report	7.3.3.24	UL	O	3	

(Note 1) MS is indispensably transmitted when not transmitting with “link setup request” message.
(Note 2) When channel type shows handover, MS is indispensably transmitted.

7.2.2.5 Extension Function Response

This message is used for notification of area Information and notification of CCH superframe configuration.

Table 7.7 Extension Function Response Message Contents

Message Type : Extension Function Response
Significance : Local
Direction : DL
Function Channel : ICCH

Information Element	Reference	Direction	Type	Length	Remark
Protocol Identifier	7.2.1	DL	M	1	
Message Type	7.2.2	DL	M	1	
Channel Type	7.3.2.1	DL	O	1	(Note 1)
Communication Parameter	7.3.3.6	DL	O	11~	(Note 2)
CCH Superframe Configuration	7.3.3.5	DL	O	13	(Note 3)
Area Information	7.3.3.1	DL	O	10	(Note 4)

(Note 1) BS responds indispensably when channel type is transmitted with “extension function request” message.
(Note 2) BS responds indispensably when MS performance is transmitted with “extension function request” message.
(Note 3) Only when global definition information pattern sent by MS and global definition information pattern maintained by BS is different, data is transmitted by BS.
(Note 4) Only when area information status number sent by MS and area information status number maintained by BS is different, data is transmitted by BS.

7.2.2.6 Connection Request

This message is used for notification of QoS, notification of connection type, etc.

Table 7.8 Connection Request Message Contents

Message Type : Connection Request
Significance : Local
Direction : UL
Function Channel : ICCH/EDCH/CDCH/ACCH

Information Element	Reference	Direction	Type	Length	Remark
Protocol Identifier	7.2.1	UL	M	1	
Message Type	7.2.2	UL	M	1	
Connection Type	7.3.2.2	UL	M	1	
Authentication Information 2	7.3.3.3	UL	O	3~	(Note 1)
QoS	7.3.3.17	UL	O	3	(Note 2)
QCS Information	7.3.3.16	UL	O	4	(Note 3)
Power Report	7.3.3.24	UL	O	3	
QCS Status	7.3.3.18	UL	O	4~34	(Note 4)

(Note 1) In case of handover or sleep restoration, this information element is mandatory.
(Note 2) In case of outgoing call, this information element is mandatory, otherwise omitted.
(Note 3) In case of handover or sleep restoration, this information element is mandatory, otherwise omitted.
(Note 4) In case of handover or sleep restoration, this information element is mandatory, otherwise omitted or only specifies QCSID 1.

7.2.2.7 Connection Response

This message is used for notification of QoS and connection-ID.

Table 7.9 Connection Response Message Contents

Message Type : Connection Response
Significance : Local
Direction : DL
Function Channel : ICCH/EDCH/CDCH/ACCH

Information Element	Reference	Direction	Type	Length	Remark
Protocol Identifier	7.2.1	DL	M	1	
Message Type	7.2.2	DL	M	1	
QCS Information	7.3.3.16	DL	O	4	(Note 1) (Note 4)
Connection-ID	7.3.3.7	DL	O	3	(Note 1)
Authentication Information 1	7.3.3.2	DL	O	3~	(Note 3)
QCS Status	7.3.3.18	DL	O	4~34	(Note 5)
Result of Location Registration	7.3.2.4	DL	O	1	(Note 2)
Cause	7.3.3.4	DL	O	4	(Note 1)
MSID	7.3.3.13	DL	O	6~9	(Note 6)

(Note 1) Connection is disconnected when connection-ID and QCS information is omitted. At this time, the cause of disconnection will be shown as no connection-ID or no QCS information.
(Note 2) Result of location registration is mandatory when connection type in “connection request” message is location registration or outgoing call with location registration
(Note 3) In case of handover or sleep restoration, this information element is mandatory.
(Note 4) In case of outgoing call, handover or sleep restoration, this information element is mandatory.
(Note 5) In case of handover or sleep restoration, this information element is mandatory, In case of outgoing call omitted or only specifies QCSID 1, otherwise (=location registration) omitted.
(Note 6) This information element is used to indicate temporary ID value. If this is set in Connection Response message, MS shall set the value in both this information element and MSID field in SCCH afterwards. Note that the value used for scrambling shall be available at the next transmission timing of LCH Request message.

7.2.2.8 ANCH/CSCH Switching Confirmation

This message is used for notification that MS has received “ANCH/CSCH switching indication” message.

Table 7.10 ANCH/CSCH Switching Confirmation Message Contents

Message Type : ANCH/CSCH Switching Confirmation
Significance : Local
Direction : UL
Function Channel : ICCH/EDCH/CDCH/ACCH

Information Element	Reference	Direction	Type	Length	Remark
Protocol Identifier	7.2.1	UL	M	1	
Message Type	7.2.2	UL	M	1	
Scheduling Information	7.3.3.19	UL	O	5	(Note)

(Note)This information element is omitted when scheduling term in scheduling information shows one TDMA frame.

7.2.2.9 ANCH/CSCH Switching Indication

This message is used to request of handover or switching channel from BS to MS, change a scheduling, MIMO type for ANCH or control ICH Continuation Transmission.

Table 7.11 ANCH/CSCH Switching Indication Message Contents

Message Type : ANCH/CSCH Switching Indication
Significance : Local
Direction : DL
Function Channel : ICCH/EDCH/CDCH/ACCH

Information Element	Reference	Direction	Type	Length	Remark
Protocol Identifier	7.2.1	DL	M	1	
Message Type	7.2.2	DL	M	1	
PRU Information	7.3.3.15	DL	O	4	(Note 1)
Scheduling Information	7.3.3.19	DL	O	5	(Note 2)
Connection-ID	7.3.3.7	DL	O	3	(Note 3)
MIMO Information	7.3.3.27	DL	O	3	(Note 4)
ICH Continuation Transmission Information	7.3.3.28	DL	O	3	(Note 5)

(Note 1) This information element is omitted when the message is sent as handover indication.

(Note 2) Scheduling term is considered to be one TDMA frame when the scheduling information is omitted.

(Note 3) The Connection-ID is specified when the QCS of switched channel is specified. The message is transmitted by switching the PRU when the connection-ID is omitted.

(Note 4) MIMO Information is omitted when MIMO is not supported.

(Note 5) ICH Continuation Transmission Information is omitted when ICH Continuation Transmission Information is not supported.

7.2.2.10 ANCH/CSCH Switching Request

This message is used to request of handover or switching channel from MS to BS, change MIMO type for ANCH or control ICH Continuation Transmission.

Table 7.12 ANCH/CSCH Switching Request Message Contents

Message Type : ANCH/CSCH Switching Request
Significance : Local
Direction : UL
Function Channel : ICCH/EDCH/CDCH/ACCH

Information Element	Reference	Direction	Type	Length	Remark
Protocol Identifier	7.2.1	UL	M	1	
Message Type	7.2.2	UL	M	1	
Cause	7.3.3.4	UL	M	4	
Connection-ID	7.3.3.7	UL	O	3	(Note 1)
Target BS-info	7.3.3.21	UL	O	7	(Note 2)
MIMO Information	7.3.3.27	UL	O	3	(Note 3)
ICH Continuation Transmission Information	7.3.3.28	UL	O	3	(Note 4)

(Note 1) The connection-ID is specified when the QCS of switched channel is specified. The message is transmitted by switching the PRU when the connection-ID is omitted.
(Note 2) MS notifies target BS-info by this information element when target BS is determined.
(Note 3) MIMO Information is omitted when MIMO is not supported.
(Note 4) ICH Continuation Transmission Information is omitted when ICH Continuation Transmission Information is not supported.

7.2.2.11 ANCH/CSCH Switching Rejection

This message is used to refuse request of ANCH/CSCH switching.

Table 7.13 ANCH/CSCH Switching Rejection Message Contents

Message Type : ANCH/CSCH Switching Rejection
Significance : Local
Direction : DL
Function Channel : ICCH/EDCH/CDCH/ACCH

Information Element	Reference	Direction	Type	Length	Remark
Protocol Identifier	7.2.1	DL	M	1	
Message Type	7.2.2	DL	M	1	
Cause	7.3.3.4	DL	M	4	

7.2.2.12 ANCH/CSCH Switching Re-request

This message is used to re-request of handover or switching channel from MS to BS, retry to change MIMO type for ANCH or retry to control ICH Continuation Transmission, when MS has rejected ANCH/CSCH switching indication from BS.

Table 7.14 ANCH/CSCH Switching Re-request Message Contents

Message Type : ANCH/CSCH Switching Re-request
Significance : Local
Direction : UL
Function Channel : ICCH/EDCH/CDCH/ACCH

Information Element	Reference	Direction	Type	Length	Remark
Protocol Identifier	7.2.1	UL	M	1	
Message Type	7.2.2	UL	M	1	
Cause	7.3.3.4	UL	M	4	
Connection-ID	7.3.3.7	UL	O	3	(Note 1)
Target BS-info	7.3.3.21	UL	O	7	(Note 2)
MIMO Information	7.3.3.27	UL	O	3	(Note 3)
ICH Continuation Transmission Information	7.3.3.28	UL	O	3	(Note 4)

(Note 1) The connection-ID is specified when the QCS of switched channel is specified. The message is transmitted by switching the PRU when the connection-ID is omitted.
(Note 2) MS notifies target BS-info by this information element when target BS is determined.
(Note 3) MIMO Information is omitted when MIMO is not supported.
(Note 4) ICH Continuation Transmission Information is omitted when ICH Continuation Transmission Information is not supported.

7.2.2.13 TDMA Slot Limitation Request

This message is used when MS requests a specific slot to be assigned. When the number of slot is over 4 in the system, this message should not be used

Table 7.15 TDMA Slot Limitation Request Message Contents

Message Type : TDMA Slot Limitation Request
Significance : Local
Direction : UL
Function Channel : ICCH/EDCH/CDCH/ACCH

Information Element	Reference	Direction	Type	Length	Remark
Protocol Identifier	7.2.1	UL	M	1	
Message Type	7.2.2	UL	M	1	
TDMA Slot Specification	7.3.2.5	UL	M	1	

7.2.2.14 CQI Report

This message is used to send CQI data that MS measures to BS.

Table 7.16 CQI Report Message Contents

Message Type : CQI Report
Significance : Local
Direction : UL
Function Channel : ICCH/EDCH/CDCH/ACCH

Information Element	Reference	Direction	Type	Length	Remark
Protocol Identifier	7.2.1	UL	M	1	
Message Type	7.2.2	UL	M	1	
CQI	7.3.3.8	UL	O	12	
Power Report	7.3.3.24	UL	O	3	

7.2.2.15 CQI Report Indication

This message is used to direct the transmission of CQI.

Table 7.17 CQI Report Indication Message Contents

Message Type : CQI Report Indication
Significance : Local
Direction : DL
Function Channel : ICCH/EDCH/CDCH/ACCH

Information Element	Reference	Direction	Type	Length	Remark
Protocol Identifier	7.2.1	DL	M	1	
Message Type	7.2.2	DL	M	1	
Map Origin	7.3.3.22	DL	O	3	
Report Indication	7.3.3.25	DL	O	3	

7.2.2.16 Additional LCH Confirmation

This message is used to notify that assigned channel is available for communication.

Table 7.18 Additional LCH Confirmation Message Contents

Message Type : Additional LCH Confirmation
Significance : Local
Direction : UL
Function Channel : ICCH/EDCH/CDCH/ACCH

Information Element	Reference	Direction	Type	Length	Remark
Protocol Identifier	7.2.1	UL	M	1	
Message Type	7.2.2	UL	M	1	

7.2.2.17 Additional LCH Indication

This message is used for notification of channel type and PRU information at adding connection-ID.

Table 7.19 Additional LCH Indication Message Contents

Message Type : Additional LCH Indication
Significance : Local
Direction : DL
Function Channel : ICCH/EDCH/CDCH/ACCH

Information Element	Reference	Direction	Type	Length	Remark
Protocol Identifier	7.2.1	DL	M	1	
Message Type	7.2.2	DL	M	1	
PRU Information	7.3.3.15	DL	M	4	
Channel type	7.3.2.1	DL	M	1	

7.2.2.18 Additional QCS Request

This message is used to request additional QoS.

Table 7.20 Additional QCS Request Message Contents

Message Type : Additional QCS Request
Significance : Local
Direction : UL
Function Channel : ICCH/EDCH/CDCH/ACCH

Information Element	Reference	Direction	Type	Length	Remark
Protocol Identifier	7.2.1	UL	M	1	
Message Type	7.2.2	UL	M	1	
QoS	7.3.3.17	UL	O	3	
QCS Information	7.3.3.16	UL	O	4	
Connection type	7.3.2.2	UL	M	1	

7.2.2.19 Additional QCS Request Indication

This message is used to direct MS to send “additional QCS request” message.

Table 7.21 Additional QCS Request Indication Message Contents

Message Type : Additional QCS Request Indication
Significance : Local
Direction : DL
Function Channel : ICCH/EDCH/CDCH/ACCH

Information Element	Reference	Direction	Type	Length	Remark
Protocol Identifier	7.2.1	DL	M	1	
Message Type	7.2.2	DL	M	1	
QoS	7.3.3.17	DL	O	3	
QCS Information	7.3.3.16	DL	O	4	
Connection Type	7.3.2.2	DL	M	1	

7.2.2.20 Additional QCS Response

This message is used for notification of QCS information, Connection-ID etc.

Table 7.22 Additional QCS Response Message Contents

Message Type : Additional QCS Response
Significance : Local
Direction : DL
Function Channel : ICCH/EDCH/CDCH/ACCH

Information Element	Reference	Direction	Type	Length	Remark
Protocol Identifier	7.2.1	DL	M	1	
Message Type	7.2.2	DL	M	1	
QCS Information	7.3.3.16	DL	O	4	
Connection-ID	7.3.3.7	DL	O	3	(Note)
QCS Status	7.3.3.18	DL	M	4~34	

(Note) When the additional LCH is unnecessary, connection-ID is omitted.

7.2.2.21 Additional QCS Rejection

This message is used to reject additional QoS.

Table 7.23 Additional QCS Rejection Message Contents

Message Type : Additional QCS Rejection
Significance : Local
Direction : DL
Function Channel : ICCH/EDCH/CDCH/ACCH

Information Element	Reference	Direction	Type	Length	Remark
Protocol Identifier	7.2.1	DL	M	1	
Message Type	7.2.2	DL	M	1	
Cause	7.3.3.4	DL	M	4	

7.2.2.22 Additional QCS Re-request

This message is used for re-request of extra QCS, when MS has rejected “additional LCH indication” message from BS.

Table 7.24 Additional QCS Re-request Message Contents

Message Type : Additional QCS Re-request
Significance : Local
Direction : UL
Function Channel : ICCH/EDCH/CDCH/ACCH

Information Element	Reference	Direction	Type	Length	Remark
Protocol Identifier	7.2.1	UL	M	1	
Message Type	7.2.2	UL	M	1	
Cause	7.3.3.4	UL	M	4	

7.2.2.23 Connection Release

This message is used to release connection-ID. It is also used to make connection-ID a sleep state in addition.

Table 7.25 Connection Release Message Contents

Message Type : Connection Release
Significance : Local
Direction : Both
Function Channel : ICCH/EDCH/CDCH/ACCH

Information Element	Reference	Direction	Type	Length	Remark
Protocol Identifier	7.2.1	Both	M	1	
Message Type	7.2.2	Both	M	1	
Disconnection Type	7.3.3.9	Both	M	3~*	
Cause	7.3.3.4	Both	O	4	
MSID	7.3.3.13	DL	O	6~9	(Note)

(Note) This information element is used to indicate temporary ID value. If this is set in Connection Release message, MS shall set the value in both this information element and MSID field in SCCH afterwards. Note that the value used for scrambling shall be available at the next transmission timing of LCH Request message.

7.2.2.24 Connection Release Acknowledgement

This message is used to confirm release connection and the state of QoS.

Table 7.26 Connection Release Acknowledgement Message Contents

Message Type : Connection Release Acknowledgement
Significance : Local
Direction : Both
Function Channel : ICCH/EDCH/CDCH/ACCH

Information Element	Reference	Direction	Type	Length	Remark
Protocol Identifier	7.2.1	Both	M	1	
Message Type	7.2.2	Both	M	1	
QCS Status	7.3.3.18	Both	M	4~34	
MSID	7.3.3.13	DL	O	6~9	(Note)

(Note) This information element is used to indicate temporary ID value. If this is set in Connection Release Acknowledge message, MS shall set the value in both this information element and MSID field in SCCH afterwards. Note that the value used for scrambling shall be available at the next transmission timing of LCH Request message.

7.2.2.25 QCS Release

This message is used to release QCS.

Table 7.27 QCS Release Message Contents

Message Type : QCS Release
Significance : Local
Direction : Both
Function Channel : ICCH/EDCH/CDCH/ACCH

Information Element	Reference	Direction	Type	Length	Remark
Protocol Identifier	7.2.1	Both	M	1	
Message Type	7.2.2	Both	M	1	
QCS Information	7.3.3.16	Both	M	4	
Cause	7.3.3.4	Both	O	4	

7.2.2.26 QCS Release Acknowledgement

This message is used to confirm release of QCS, and the state of QoS.

Table 7.28 QCS Release Acknowledgement Message Contents

Message Type : QCS Release Acknowledgement
Significance : Local
Direction : Both
Function Channel : ICCH/EDCH/CDCH/ACCH

Information Element	Reference	Direction	Type	Length	Remark
Protocol Identifier	7.2.1	Both	M	1	
Message Type	7.2.2	Both	M	1	
QCS Status	7.3.3.18	Both	M	4~34	

7.2.2.27 Authentication Information 1

This message is used to authenticate MS.

Table 7.29 Authentication Information 1 Message Contents

Message Type : Authentication Information 1
Significance : Local
Direction : DL
Function Channel : ICCH/EDCH/CDCH/ACCH

Information Element	Reference	Direction	Type	Length	Remark
Protocol Identifier	7.2.1	DL	M	1	
Message Type	7.2.2	DL	M	1	
Authentication Information 1	7.3.3.2	DL	M	3~*	

7.2.2.28 Authentication Information 2

This message is used to authenticate MS.

Table 7.30 Authentication Information 2 Message Contents

Message Type : Authentication Information 2
Significance : Local
Direction : UL
Function Channel : ICCH/EDCH/CDCH/ACCH

Information Element	Reference	Direction	Type	Length	Remark
Protocol Identifier	7.2.1	UL	M	1	
Message Type	7.2.2	UL	M	1	
Authentication Information 2	7.3.3.3	UL	M	3~*	

7.2.2.29 Encryption Key Indication

This message is used to transmit encryption key to MS.

Table 7.31 Encryption Key Indication Message Contents

Message Type : Encryption Key Indication
Significance : Local
Direction : DL
Function Channel : ICCH/EDCH/CDCH/ACCH

Information Element	Reference	Direction	Type	Length	Remark
Protocol Identifier	7.2.1	DL	M	1	
Message Type	7.2.2	DL	M	1	
Encryption Key Set	7.3.3.10	DL	O	3~*	
Encryption Key Information	7.3.3.26	DL	O	6	

7.2.2.30 QCS Status Enquiry Response

This message is used to notify its own status of QCS or as a response to "QCS status enquiry request" message.

Table 7.32 QCS Status Enquiry Response Message Contents

Message Type : QCS Status Enquiry Response
Significance : Local
Direction : Both
Function Channel : ICCH/EDCH/CDCH/ACCH

Information Element	Reference	Direction	Type	Length	Remark
Protocol Identifier	7.2.1	Both	M	1	
Message Type	7.2.2	Both	M	1	
QCS Status	7.3.3.18	Both	M	4~34	
Cause	7.3.3.4	Both	O	4	

7.2.2.31 QCS Status Enquiry Request

This message is used to confirm QCS status. Response to the transmission of "QCS status enquiry response" message will be mandatory if this message is received.

Table 7.33 QCS Status Enquiry Request Message Contents

Message Type : QCS Status Enquiry Request
Significance : Local
Direction : Both
Function Channel : ICCH/EDCH/CDCH/ACCH

Information Element	Reference	Direction	Type	Length	Remark
Protocol Identifier	7.2.1	Both	M	1	
Message Type	7.2.2	Both	M	1	
QCS Status	7.3.3.18	Both	M	4~34	

7.3 Information Element Format

7.3.1 Format Regulations

The Bit 1 is considered single octet information element, while the Bit 0 is considered multiple octet information elements.
Figure 7.2 shows the single octet information element format. The information element identifier is shown in the Bit 7~5, and information element contents are shown Bit 4~1.

Bit	8	7	6	5	4	3	2	1	
	Type	Information Element Identifier:			Information Element Contents				Octet 1
	1	1/0	1/0	1/0	1/0	1/0	1/0	1/0	

Figure 7.2 Single Octet Information Element Format

Figure 7.3 shows the multiple octet information element format. The information element identifier is shown in Octet 1, and the length of the information contents is shown in Octet 2. The information contents are assigned from Octet 3 on.

Bit	8	7	6	5	4	3	2	1	
	Type	Information Element Identifier:							Octet 1
	0	1/0	1/0	1/0	1/0	1/0	1/0	1/0	
	Length								Octet 2
	1/0	1/0	1/0	1/0	1/0	1/0	1/0	1/0	
	Information Element Contents								Octet 3~

Figure 7.3 Multiple Octet Information Element Format

7.3.2 Single Octet Information Element Identifier

Table 7.34 shows the single octet information element identifiers.

Table 7.34 Single Octet Information Element Identifier List

Information Name	Information Identifier							
Bit	8	7	6	5	4	3	2	1
Channel Type	1	0	0	1	-	-	-	-
Connection Type	1	0	1	0	-	-	-	-
Extension Function Sequence	1	0	1	1	-	-	-	-
Result of Location Registration	1	1	0	0	-	-	-	-
TDMA Slot Specification	1	1	0	1	-	-	-	-

7.3.2.1 Channel Type

This information element is used to notify channel type.

Octet	Bit 8	7	6	5	4	3	2	1
1	Type 1	Channel Type 0	0	1	Assign Chan-nel Type	Physical Channel Type		Re-served

Assign Channel Type (Octet 1)

Bit 4	
0	ANCH
1	CSCH

Physical Channel Type (Octet 1)

Bit 3	2	
-	0/1	ANCH absent/present
0/1	-	CSCH absent/present

Figure 7.4 Channel Type

7.3.2.2 Connection Type

This information element is used to notify connection type.

Octet	Bit 8	7	6	5	4	3	2	1
1	Type 1	Connection Type 0	1	0	Connection Type			

Connection Type (Octet 1)

Bit 4	3	2	1	
0	0	0	0	Unallocated (unassigned) number
0	0	0	1	Outgoing call
0	0	1	0	Incoming call
0	0	1	1	Location registration
0	1	0	0	Handover
0	1	0	1	Restoration from sleep state
0	1	1	0	Outgoing call with location registration
Other				Reserved

Figure 7.5 Connection Type

7.3.2.3 Extension Function Sequence

This information element is used so that BS orders the start of extension function sequence to MS.

Octet	Bit 8	7	6	5	4	3	2	1
1	Type 1	Extension Function Sequence 0	1	1	Start Indica-tion	Reserved		

Start Indication (Octet 1)

Bit 4	
0	Extension function sequence absent
1	Extension function sequence present

Figure 7.6 Extension Function Sequence

7.3.2.4 Result of Location Registration

This information element is used to notify result of the location registration.

Octet	Bit 8	7	6	5	4	3	2	1
1	Type 1	Result of Location Registration 1	0	0	Result of Location Registration			

Result of Location Registration (Octet 1)

Bit 4	3	2	1	
0	-	-	-	Class of retry possible
0	0	0	0	OK
0	0	0	1	NG (Network trouble)
0	0	1	0	NG (Temporary failure)
0	0	1	1	NG (Timer expired)
0	1	0	0	NG (Protocol error)
0	1	0	1	NG(Others)
1	-	-	-	Class of retry impossible
1	0	0	0	NG (User not contracted)
1	0	0	1	NG (Authentication error)
1	0	1	0	NG (Service un-implemented)
1	0	1	1	NG (Others)
1	1	0	0	NG (Call state and message mismatch)
	Other			Reserved

Figure 7.7 Result of Location Registration

7.3.2.5 TDMA Slot Specification

This information element is used to request to switch the connection of the specified slot to another slot. When the number of slot is over 4 in the system, this information element should not be used.

Octet	Bit 8	7	6	5	4	3	2	1
1	Type 1	TDMA Slot Specification 1	0	1	Slot Number			

Slot Number (Octet 1)

Bit 8	7	6	5	
-	-	-	0/1	TDMA Slot 1 uncontrollable / controllable
-	-	0/1	-	TDMA Slot 2 uncontrollable / controllable
-	0/1	-	-	TDMA Slot 3 uncontrollable / controllable
0/1	-	-	-	TDMA Slot 4 uncontrollable / controllable

Figure 7.8 TDMA Slot Specification

7.3.3 Multiple Octet Information Element Identifier

Table 7.35 shows the multiple octet information element identifiers.

Table 7.35 Multiple Information Element Identifier List

Information name	Information identifier							
Bit	8	7	6	5	4	3	2	1
Area Information	0	0	0	0	0	0	0	1
Authentication Information 1	0	0	0	0	0	0	1	0
Authentication Information 2	0	0	0	0	0	0	1	1
Cause	0	0	0	0	0	1	0	0
CCH Superframe Configuration	0	0	0	0	0	1	0	1
Communication Parameter	0	0	0	0	0	1	1	0
Connection-ID	0	0	0	0	0	1	1	1
CQI	0	0	0	0	1	0	0	0
Disconnection Type	0	0	0	0	1	0	0	1
Encryption Key Set	0	0	0	0	1	0	1	0
Extension Function Number	0	0	0	0	1	0	1	1
MS Performance	0	0	0	0	1	1	0	0
MSID	0	0	0	0	1	1	0	1
Protocol Version	0	0	0	0	1	1	1	0
PRU Information	0	0	0	0	1	1	1	1
QCS Information	0	0	0	1	0	0	0	0
QoS	0	0	0	1	0	0	0	1
QCS Status	0	0	0	1	0	0	1	0
Scheduling Information	0	0	0	1	0	0	1	1
Source BS-info	0	0	0	1	0	1	0	0
Target BS-info	0	0	0	1	0	1	0	1
MAP Origin	0	0	0	1	0	1	1	0
Power Report	0	0	0	1	0	1	1	1
Report Indication	0	0	0	1	1	0	0	0

Information name	Information identifier							
Bit	8	7	6	5	4	3	2	1
Encryption Key Information	0	0	0	1	1	0	0	1
MIMO Information	0	0	0	1	1	0	1	0
ICH Continuation Transmission	0	0	0	1	1	0	1	1
Reserved	0	0	Other					
Option	0	1						

7.3.3.1 Area Information

This information element is used so that MS can judge the communication area of BS.

Octet	Bit 8	7	6	5	4	3	2	1
1	Area information							
	0	0	0	0	0	0	0	1
2	Area Information Content Length							
3	Standby Zone Selection Level							
4	Standby Zone Hold Level							
5	Handover Process Level							
6	Handover Destination Zone Selection Level							
7	Target BS Search Level							
8	ANCH/CSCH Switching FER Threshold Value							
9	ANCH/CSCH Switching SINR Threshold Value							
10	Area Information Status Number			Reserved				

<u>Standby Zone Selection Level (Octet 3)</u>

It specifies the threshold value level (CCCH) at which MS selects BS.

Bit 8	7	6	5	4	3	2	1	
0	1	1	1	0	0	1	0	80 dBuV
				:				:
0	1	0	0	0	0	0	0	30 dBuV
				:				:
0	0	1	0	1	1	0	0	10 dBuV

(Note) 1 dB unit

Standby Zone Holding Level (Octet 4)

Specifies the threshold value level (CCCH) at which MS again selects BS.

Bit 8	7	6	5	4	3	2	1	
0	1	1	1	0	0	1	0	80 dBuV
				:				:
0	1	0	0	0	0	0	0	30 dBuV
				:				:
0	0	1	0	1	1	0	0	10 dBuV

(Note) 1 dB unit

Handover Process Level (Octet 5)

It specifies the threshold value level (ANCH/CSCH) at which MS performs handover.

Bit 8	7	6	5	4	3	2	1	
0	1	1	1	0	0	1	0	80 dBuV
				:				:
0	1	0	0	0	0	0	0	30 dBuV
				:				:
0	0	1	0	1	1	0	0	10 dBuV

(Note) 1 dB unit

Handover Destination Zone selection Level (Octet 6)

It specifies the threshold value level (C CCH) at which MS selects handover destination BS.

Bit 8	7	6	5	4	3	2	1	
0	1	1	1	0	0	1	0	80 dBuV
				:				:
0	1	0	0	0	0	0	0	30 dBuV
				:				:
0	0	1	0	1	1	0	0	10 dBuV

(Note) 1 dB unit

Target BS Searching Level (Octet 7)

It specifies the threshold value level (ANCH/CSCH) at which MS searches handover destination BS.

Bit 8	7	6	5	4	3	2	1	
0	1	1	1	0	0	1	0	80 dBuV
				:				:
0	1	0	0	0	0	0	0	30 dBuV
				:				:
0	0	1	0	1	1	0	0	10 dBuV

(Note) 1 dB unit

ANCH/CSCH Switching FER Threshold Value (Octet 8)

It specifies the number of errors of the 240 slots. And FER threshold value (ANCH/CSCH) shows the number of errors at which the channel switching function of MS is activated.

Bit 8	7	6	5	4	3	2	1	
0	0	0	0	0	0	0	0	Number of slot errors n = 0
0	0	0	0	0	0	0	1	Number of slot errors n = 1
			:					:
1	1	1	1	0	0	0	0	Number of slot errors n = 240
			Other					Reserved

ANCH/CSCH Switching SINR Threshold Value (Octet 9)

It specifies the SINR threshold value (ANCH/CSCH) at which MS performs channel switching because of reception quality degradation.

Bit 8	7	6	5	4	3	2	1	
1	1	1	1	0	1	1	0	SINR = -10 dB
			:					:
1	1	1	1	1	1	1	1	SINR = -1 dB
0	0	0	0	0	0	0	0	SINR = 0 dB
0	0	0	0	0	0	0	1	SINR = 1 dB
0	0	1	0	1	0	0	0	SINR = 40 dB
			Other					Reserved

Area Information Status Number (Octet 10)

It shows the status number of area information reported by this information element.

Bit 8	7	6	
0	0	0	No Area Information
0	0	1	Status number 1
	:		:
1	1	1	Status number 7

Figure 7.9 Area Information

7.3.3.2 Authentication Information 1

This information element is used to transmit authentication data, etc.

Octet	Bit 8	7	6	5	4	3	2	1
1	Authentication Information 1							
	0	0	0	0	0	0	1	0
2	Authentication Information 1 Content Length							
3~	Authentication Data 1							

(Note) The content of authentication data is not specified here.

Figure 7.10 Authentication Information 1

Authentication Data 1 (Authentication Message Type) (Octet 3)

Bit 8	7	6	5	4	3	2	1	
0	0	0	0	0	0	0	0	Reserved
0	0	0	0	0	0	0	1	Authentication method Request
0	0	0	0	0	0	1	0	Authentication method Response
0	0	0	0	0	0	1	1	Authentication method Acknowledge
0	0	0	0	0	1	0	0	Transparent control information
0	0	0	0	0	1	0	1	Encryption Indication
0	0	0	0	0	1	1	0	Encryption Request
0	0	0	0	0	1	1	1	Re-Authentication Request
Other								Reserved

7.3.3.2.1 Authentication Data 1 (Authentication method Request)

Octet	Bit 8	7	6	5	4	3	2	1
3	Authentication Message Type (Authentication method Request)							
	0	0	0	0	0	0	0	1

7.3.3.2.2 Authentication Data 1 (Authentication method Acknowledge)

Octet	Bit 8	7	6	5	4	3	2	1
3	Authentication Message Type (Authentication method Acknowledge)							
	0	0	0	0	0	0	1	1
4	Authentication method							
5	Authentication method							

Authentication method(Octet 4)

Bit 8	7	6	5	4	3	2	1	
-	-	-	-	-	-	-	0/1	Authentication Method 1 absent/present
-	-	-	-	-	-	0/1	-	Authentication Method 2 absent/present
-	-	-	-	-	0/1	-	-	Authentication Method 3 absent/present
				:				
0/1	-	-	-	-	-	-	-	Authentication Method 8 absent/present

Authentication method(Octet 5)

Bit 8	7	6	5	4	3	2	1	
-	-	-	-	-	-	-	0/1	Authentication Method 9 absent/present
-	-	-	-	-	-	0/1	-	Authentication Method 10 absent/present
-	-	-	-	-	0/1	-	-	Authentication Method 11 absent/present
				:				
0/1	-	-	-	-	-	-	-	Authentication Method 16 absent/present

(Note) BS notifies MS of authentication method.

7.3.3.2.3 Authentication Data 1 (Transparent control information)

Octet	Bit 8	7	6	5	4	3	2	1
3	Authentication Message Type (Transparent control information)							
	0	0	0	0	0	1	0	0
4~	Authentication Information							

Authentication Information (Octet 4~)

Authentication Information is transmitted between MS and network transparently via BS.

7.3.3.2.4 Authentication Data 1 (Encryption Indication)

Octet	Bit 8	7	6	5	4	3	2	1
3	Authentication Message Type (Encryption Indication)							
	0	0	0	0	0	1	0	1
4	Encryption Method							
5	Encryption Method							
6~21	Random Number							

Encryption Method (Octet 4)

Bit 8	7	6	5	4	3	2	1	
0/1	-	-	-	-	-	-	-	Encryption Method 1 absent/present
-	0/1	-	-	-	-	-	-	Encryption Method 2 absent/present
-	-	0/1	-	-	-	-	-	Encryption Method 3 absent/present
			:					
-	-	-	-	-	-	-	0/1	Encryption Method 8 absent/present

Encryption Method (Octet 5)

Bit 8	7	6	5	4	3	2	1	
0/1	-	-	-	-	-	-	-	Encryption Method 9 absent/present
-	0/1	-	-	-	-	-	-	Encryption Method 10 absent/present
-	-	0/1	-	-	-	-	-	Encryption Method 11 absent/present
			:					
-	-	-	-	-	-	-	0/1	Encryption Method 16 absent/present

Random Number (Octet 6~21)

Challenge value for challenge and response authentication check. This is a random value.

7.3.3.3 Authentication Information 2

This information element is used to transmit authentication data etc.

Octet	Bit 8	7	6	5	4	3	2	1
1	Authentication Information 2							
	0	0	0	0	0	0	1	1
2	Authentication Information 2 Content Length							
3~	Authentication Data 2							

(Note) The content of authentication data is not specified here.

Figure 7.11 Authentication Information 2

Authentication Data 2 (Authentication Message Type) (Octet 3)

Bit 8	7	6	5	4	3	2	1	
0	0	0	0	0	0	0	0	Reserved
0	0	0	0	0	0	0	1	Authentication method Request
0	0	0	0	0	0	1	0	Authentication method Response
0	0	0	0	0	0	1	1	Authentication method Acknowledge
0	0	0	0	0	1	0	0	Transparent control information
0	0	0	0	0	1	0	1	Encryption Indication
0	0	0	0	0	1	1	0	Encryption Request
0	0	0	0	0	1	1	1	Re-Authentication Request
Other								Reserved

7.3.3.3.1 Authentication Data 2 (Authentication method Response)

Octet	Bit 8	7	6	5	4	3	2	1
3	Authentication Message Type (Authentication method Response)							
	0	0	0	0	0	0	1	0
4	Authentication method							
5	Authentication method							

<u>Authentication method(Octet 4)</u>

Bit 8	7	6	5	4	3	2	1	
-	-	-	-	-	-	-	0/1	Authentication Method 1 absent/present
-	-	-	-	-	-	0/1	-	Authentication Method 2 absent/present
-	-	-	-	-	0/1	-	-	Authentication Method 3 absent/present
				:				
0/1	-	-	-	-	-	-	-	Authentication Method 8 absent/present

<u>Authentication method(Octet 5)</u>

Bit 8	7	6	5	4	3	2	1	
-	-	-	-	-	-	-	0/1	Authentication Method 9 absent/present
-	-	-	-	-	-	0/1	-	Authentication Method 10 absent/present
-	-	-	-	-	0/1	-	-	Authentication Method 11 absent/present
				:				
0/1	-	-	-	-	-	-	-	Authentication Method 16 absent/present

7.3.3.3.2 Authentication Data 2 (Transparent control information)

Octet	Bit 8	7	6	5	4	3	2	1
3	Authentication Message Type (Transparent control information)							
	0	0	0	0	0	1	0	0
4~	Authentication Information							

<u>Authentication Information (Octet 4~)</u>

Authentication Information is transmitted between MS and network transparently via BS.

7.3.3.3.3 Authentication Data 2 (Re-Authentication Request)

Octet	Bit 8	7	6	5	4	3	2	1
3	Authentication Message Type (Re-Authentication Request)							
	0	0	0	0	0	1	1	1

7.3.3.3.4 Authentication Data 2 (Encryption Request)

Octet	Bit 8	7	6	5	4	3	2	1
3	Authentication Message Type (Encryption Request)							
	0	0	0	0	0	1	1	0
4	Encryption Method							
5	Encryption Method							
6~21	Response Value							

Encryption Method (Octet 4)

Bit 8	7	6	5	4	3	2	1	
0/1	-	-	-	-	-	-	-	Encryption Method 1 absent/present
-	0/1	-	-	-	-	-	-	Encryption Method 2 absent/present
-	-	0/1	-	-	-	-	-	Encryption Method 3 absent/present
			:					Encryption Method 4 absent/present
-	-	-	-	-	-	-	0/1	Encryption Method 8 absent/present

Encryption Method (Octet 5)

Bit 8	7	6	5	4	3	2	1	
0/1	-	-	-	-	-	-	-	Encryption Method 9 absent/present
-	0/1	-	-	-	-	-	-	Encryption Method 10 absent/present
-	-	0/1	-	-	-	-	-	Encryption Method 11 absent/present
			:					Encryption Method 12 absent/present
-	-	-	-	-	-	-	0/1	Encryption Method 16 absent/present

Response Value (Octet 6~21)

Response value for challenge and response check.

7.3.3.4 Cause

The information element is used to describe the reason and location of message generation.

Octet	Bit 8	7	6	5	4	3	2	1
1	Cause							
	0	0	0	0	0	1	0	0
2	Cause Content Length							
3	Coding Standard		Location				Reserved	
4	Cause Value							Re-served

Coding Standard (Octet 3)

Bit 8	7	
0	0	XGP
1	1	Specific to the local network standard
Other		Reserved

Location (Octet 3)

Bit 6	5	4	3	
0	0	0	0	MS
0	0	0	1	BS
0	0	1	0	Network
0	0	1	1	Other
Other				Reserved

Cause Value (Octet 4)

Bit 8	7	6	5	4	3	2	
0	0	0	-	-	-	-	Normal class
			0	0	0	0	Normal disconnect
							Response to QCS status enquiry request
			1	1	1	1	Others
0	1	0	-	-	-	-	Resource busy class
			0	0	0	1	No vacant PRU (include no slot available)
			0	0	1	0	No available PRU
			0	0	1	1	No route to specified transit network
			0	1	0	0	No connection-ID
			0	1	0	1	No QCS information
			0	1	1	0	Equipment abnormal
			1	1	1	1	Others
0	1	1	-	-	-	-	Resource down class
			0	0	0	1	Temporary failure
			0	0	1	0	Network out of order
			1	1	1	1	Others
1	0	0	-	-	-	-	Service not available class
			0	0	0	1	Requested function not responding
			1	1	1	1	Service or option not implemented, unspecified (include no channel adding function at BS side)
1	0	1	-	-	-	-	Invalid message (e.g.: Parameter out of range) class
			0	0	0	1	Assigned PRU non corresponding
			0	0	1	0	No channel adding function
1	1	0	-	-	-	-	Procedure error class
			0	0	0	1	Message abnormal
			0	0	1	0	Information element abnormal
			0	0	1	1	Sequence abnormal
			0	1	0	0	Timer expiration
			1	1	1	1	Other procedure error class
		Other					Reserved

Figure 7.12 Cause

7.3.3.5 CCH Superframe Configuration

This information element is used to notify superframe configuration of CCH.

Octet	Bit 8	7	6	5	4	3	2	1
1	CCH Superframe Configuration							
	0	0	0	0	0	1	0	1
2	CCH Superframe Configuration Content Length							
3	Reserved		LCCH Interval Value n					
4	Paging Grouping Factor n_{GROUP}				Paging Area Number Length n_p			
5	Reserved		Number of Same Paging Groups n_{SG}			Battery Saving Cycle Maximum Value n_{BS}		
6	Control Carrier Structure		PCH Number n_{PCH}			Frame Basic Unit Length n_{SUB}		
7	Reserved							
8	Re-served	Broadcasting Status Indication			Global Definition Information Pattern			
9	Protocol Version							
10	Reserved			BSID Area Bit Length n_{BL}				
11	MCC (Mobile Country Code)							
12			MNC (Mobile Network Code)					
13								

<u>LCCH Interval Value n (Octet 3)</u>
It shows the DL LCCH slot intermittent cycle.

Bit 6	5	4	3	2	1	
0	0	0	0	0	0	Reserved
0	0	0	0	0	1	n = 1
0	0	0	0	1	0	n = 2
0	0	0	0	1	1	n = 3
		:				:
0	1	0	1	0	0	n = 20
		:				:
1	1	1	1	1	1	n = 63

Paging Grouping Factor n_{GROUP} (Octet 4)
It shows the value of PCH information corresponding to the number of group divisions.

Bit 8	7	6	5	
0	0	0	0	LCCH superframe is not constructed (option)
0	0	0	1	n_{GROUP} = 1
0	0	1	1	n_{GROUP} = 2
	:			:
1	1	1	1	n_{GROUP} = 15

(Note) If LCCH is multiplexed, the values of n_{PCH} and n_{GROUP} will be set so that the paging group number does not exceed 127.

Paging Area Number Length n_p (Octet 4)
It shows the bit length of the paging area number included in BSID.

Bit 4	3	2	1	
0	0	0	0	Reserved
0	0	0	1	n_p = 4
0	0	1	0	n_p = 6
0	0	1	1	n_p = 8
0	1	0	0	n_p = 10
0	1	0	1	n_p = 12
0	1	1	0	n_p = 13
0	1	1	1	n_p = 14
1	0	0	0	n_p = 15
1	0	0	1	n_p = 16
1	0	1	0	n_p = 17
1	0	1	1	n_p = 18
1	1	0	0	n_p = 19
1	1	0	1	n_p = 20
1	1	1	0	n_p = 21
1	1	1	1	n_p = 22

(Note 2) n_p must be the same even in a different paging area if handover between paging areas is executed.

Number of Same Paging Groups n_{SG} (Octet 5)
It shows the number of PCH slots belonging to the same paging group in the LCCH superframe.

Bit 6	5	4	
0	0	0	LCCH superframe is not constructed (option)
0	0	1	n_{SG} = 1
	:		:
1	1	1	n_{SG} = 7

Battery Saving Cycle Maximum Value n_{BS} (octet 5)
It shows the times that BS continuously sends the same paging signal to the paging group.

Bit 3	2	1	
0	0	0	LCCH superframe is not constructed (option)
0	0	1	n_{BS} = 1
	:		:
1	1	1	n_{BS} = 7

Control Carrier Structure (Octet 6)
It shows the presence or absence of a mutual relationship between paging group and number of LCCHs used by the relevant BS.

Bit 8	7	
0	0	Shows that only 1 LCCH is used.
0	1	Shows that 2 LCCHs are used, and each individual LCCH is independent.
1	0	Shows that 2 LCCHs are used, and PCH paging groups are mutually related.
1	1	Reserved

PCH Number n_{PCH} (Octet 6)
It shows the number of PCHs in the frame basic unit.

Bit 6	5	4	
0	0	0	No PCH (optional)
0	0	1	1 PCH slots in frame basic unit (n_{PCH} = 1)
	:		:
1	1	1	7 PCH slots in frame basic unit (n_{PCH} = 7)

(Note 3) If LCCH is multiplexed, the values of n_{PCH} and n_{GROUP} will be set so that the paging group number does not exceed 127.

Frame Basic Unit Length n_{SUB} (Octet 6)

It shows the length of the LCCH superframe structural element (frame basic unit).

Bit 3	2	1	
0	0	0	(Optional)
0	0	1	n_{SUB} = 1
	:		:
1	1	1	n_{SUB} = 7

Broadcasting Status Indication (Octet 8)

It shows the presence or absence of information broadcasting messages other than "radio channel information broadcasting" message sent on the relevant LCCH.

Bit 6	5	4	
-	-	1/0	"System information broadcasting" message present / absent
-	1/0	-	"Optional information broadcasting" message present / absent
1/0	-	-	Reserved

Global Definition Information Pattern (Octet 8)

It shows the relevant pattern number of the present "radio channel information broadcasting" message. When "radio channel information broadcasting" message changes, the new global definition information pattern is set.

Bit 4	3	2	1	
0	0	0	0	Global definition information pattern (0)
0	0	0	0	Global definition information pattern (1)
0	0	1	0	Global definition information pattern (2)
	:			:
1	1	1	0	Global definition information pattern (7)
	Other			Reserved

Protocol Version (Octet 9)

It shows protocol version supported by BS.

Bit 8	7	6	5	4	3	2	1	
-	-	-	-	-	-	-	1/0	Version 1 present / absent
-	-	-	-	-	-	1/0	-	Version 2 present / absent
			Other					Reserved

BSID Area Bit Length n_{BL} (Octet 10)
It shows the BSID area bit length included in the BS information.

Bit 5	4	3	2	1	
0	0	0	0	0	n_{BL} = 15
0	0	0	0	1	n_{BL} = 16
0	0	0	1	0	n_{BL} = 17
		:			:
1	1	0	0	1	n_{BL} = 40
		Other			Reserved

Mobile Country Code (Octet 11-12)
It is used to indicate a mobile phone operator along with Mobile Network Code.

Mobile Network Code (Octet 12-13)
It is used to indicate a mobile phone operator along with Mobile Country Code.

Figure 7.13 CCH Superframe Configuration

7.3.3.6 Communication Parameter

This information element is used to notify MCS, map timing etc.

Octet	Bit 8	7	6	5	4	3	2	1
1	Communication parameter 0	0	0	0	0	1	1	0
2	Communication parameter Content Length							
3	OFDM MCS for UL / SC MCS for UL							
4	OFDM MCS for UL / SC MCS for UL							
5	OFDM MCS for DL							
6	OFDM MCS for DL							
7	Map Timing	MAP Origin					Reserved	
8	EXCH Timing			Window Size			Com-bine	Sequence Number Expansion
9	Retransmission Times(Note)			Full Sub-carrier Mode	Error Correct Encoding			Re-served
10	HARQ Method			Antenna Switch (DL)	Number of Layers (DL)			
11	Reserved				SDMA Stream Number Information			
12	MIMO (DL)							

(Note) MS notifies BS the maximum value that can correspond by MS performance. BS decides the retransmission time, and indicates it by communication parameter.

OFDM MCS for UL (Octet 3)

Bit 8	7	6	5	4	3	2	1	Modulation class [Puncturing rate, Efficiency]
0/1	-	-	-	-	-	-	-	BPSK [1 , 0.5] absent/present
-	0/1	-	-	-	-	-	-	BPSK [3/4 , 0.67] absent/present
-	-	0/1	-	-	-	-	-	QPSK [1 , 1] absent/present
-	-	-	0/1	-	-	-	-	QPSK [4/6 , 1.5] absent/present
-	-	-	-	0/1	-	-	-	Reserved
-	-	-	-	-	0/1	-	-	16QAM [1 , 2] absent/present
-	-	-	-	-	-	0/1	-	16QAM [4/6 , 3] absent/present
-	-	-	-	-	-	-	0/1	64QAM [3/4 , 4] absent/present

OFDM MCS for UL (Octet 4)

Bit 8	7	6	5	4	3	2	1	
0/1	-	-	-	-	-	-	-	64QAM [6/10 , 5] absent/present
-	0/1	-	-	-	-	-	-	256QAM [4/6 , 6] absent/present
		0/1						256QAM [8/14 , 7] absent/present
			Other					Reserved

SC MCS for UL (Octet 3)

Bit 8	7	6	5	4	3	2	1	Modulation class [Puncturing rate, Efficiency]
0/1	-	-	-	-	-	-	-	π/2- BPSK [1 , 0.5] absent/present
-	0/1	-	-	-	-	-	-	π/2- BPSK [3/4 , 0.67] absent/present
-	-	0/1	-	-	-	-	-	π/4- QPSK [1 , 1] absent/present
-	-	-	0/1	-	-	-	-	π/4- QPSK [4/6 , 1.5] absent/present
-	-	-	-	0/1	-	-	-	8PSK [3/4 , 2] absent/present
-	-	-	-	-	0/1	-	-	16QAM [1 , 2] absent/present
-	-	-	-	-	-	0/1	-	16QAM [4/6 , 3] absent/present
-	-	-	-	-	-	-	0/1	64QAM [3/4 , 4] absent/present

SC MCS for UL (Octet 4)

Bit 8	7	6	5	4	3	2	1	
0/1	-	-	-	-	-	-	-	64QAM [6/10 , 5] absent/present
-	0/1	-	-	-	-	-	-	256QAM [4/6 , 6] absent/present
-	-	0/1	-	-	-	-	-	256QAM [8/14 , 7] absent/present
			Other					Reserved

OFDM MCS for DL (Octet 5)

Bit 8	7	6	5	4	3	2	1	Modulation class [Puncturing rate, Efficiency]
0/1	-	-	-	-	-	-	-	BPSK [1 , 0.5] absent/present
-	0/1	-	-	-	-	-	-	BPSK [3/4 , 0.67] absent/present
-	-	0/1	-	-	-	-	-	QPSK [1 , 1] absent/present
-	-	-	0/1	-	-	-	-	QPSK [4/6 , 1.5] absent/present
-	-	-	-	0/1	-	-	-	Reserved
-	-	-	-	-	0/1	-	-	16QAM [1 , 2] absent/present
-	-	-	-	-	-	0/1	-	16QAM [4/6 , 3] absent/present
-	-	-	-	-	-	-	0/1	64QAM [3/4 , 4] absent/present

OFDM MCS for DL (Octet 6)

Bit 8	7	6	5	4	3	2	1	
0/1	-	-	-	-	-	-		64QAM [6/10 , 5] absent/present
-	0/1	-	-	-	-		-	256QAM [4/6 , 6] absent/present
								256QAM [8/14 , 7] absent/present
			Other					Reserved

Map Timing (Octet 7)

Bit 8	
0	Timing 1
1	Timing 2

Map Origin (Octet 7)

Bit 7	6	5	4	3	
0	0	0	0	0	SCH 1
0	0	0	0	1	SCH 2
0	0	0	1	0	SCH 3
		:			:
1	1	1	1	1	SCH 32

EXCH Timing (Octet 8)

Bit 8	7	6	
0	0	0	Level 0
0	0	1	Level 1
0	1	0	Level 2
0	1	1	Level 3
1	0	0	Level 4
	Other		Reserved

Window Size (Octet 8)

Bit 5	4	3	
0	0	0	Reserved
0	0	1	Window size pattern 1
0	1	0	Window size pattern 2
	:		:
1	1	1	Window size pattern 7

MAC Combine (Octet 8)

Bit 2	
0	MAC Combine absent
1	MAC Combine present

Sequence Number Expansion (Octet 8)

Bit 1	
0	Sequence Number Expansion absent
1	Sequence Number Expansion present

Retransmission Times (Octet 9)

Bit 8	7	6	
0	0	0	No Retransmission
0	0	1	Once
0	1	0	Twice
	:		:
1	1	1	7 times

Full Subcarrier Mode (Octet 9)

Bit 5	
0/1	Full Subcarrier Mode function absent / present

Error Correction Encoding (Octet 9)

Bit 4	3	2	
0/1	-	-	Convolutional encoding (Mandatory) absent/present
-	0/1	-	Turbo coding (Optional) absent/present
-	-	0/1	Reserved

HARQ Method (Octet 10)

Bit 8	7	6	
0/1	-	-	CC-HARQ absent/present
-	0/1	-	IR-HARQ (Optional) absent/present
-	-	0/1	Reserved

Antenna Switch (DL) (Octet 10)

Bit 5	4	
0/1	-	Switching each slot absent / present
-	0/1	Switching each frame absent / present

Number of Layers (DL) (Octet 10)

Bit 3	2	1	
0/1	-	-	2 layers absent / present
-	0/1	-	4 layers absent / present
-	-	0/1	Reserved

SDMA Stream Number Information (Octet 11)

Bit 4	3	2	1	
0	0	0	0	Reserved
0	0	0	1	SDMA Stream Number Information = 1
0	0	1	0	SDMA Stream Number Information = 2
	:			:
1	1	0	0	SDMA Stream Number Information = 12
	Other			Reserved

MIMO (DL) (Octet 12)

Bit 8	7	6	5	4	3	2	1	
0/1	-	-	-	-	-	-	-	Expansion of bit (Note 1)
-	0/1	-	-	-	-	-	-	STBC absent / present
-	-	0/1	-	-	-	-	-	SM absent / present
-	-	-	0/1	-	-	-	-	EMB absent / present
			Other					Reserved

(Note 1) If Bit 8 is set “1”, MS and BS should consider next octet as expanded MIMO Information.

Figure 7.14 Communication Parameter

7.3.3.7 Connection-ID

This information element is used to notify connection-ID.

Octet	Bit 8	7	6	5	4	3	2	1
1	Connection-ID							
	0	0	0	0	0	1	1	1
2	Connection-ID Content Length							
3	Connection-ID				Reserved			

Connection-ID (Octet 3)

Bit 8	7	6	5	
0	0	0	0	Connection-ID 1
0	0	0	1	Connection-ID 2
0	0	1	0	Connection-ID 3
	:			:
1	1	1	1	Connection-ID 16

Figure 7.15 Connection-ID

7.3.3.8 CQI

This information element is used to notify the CQI to BS that is measured by MS.

Octet	Bit 8	7	6	5	4	3	2	1
1	CQI							
	0	0	0	0	1	0	0	0
2	CQI Content Length							
3	RMAP (MSB)							
:	:							
11	RMAP (LSB)							
12	MAP Origin					Reserved		

RMAP is the number based on MAP origin. MS notifies the status of PRU as CQI, as requested by BS. CQI information is composed of RMAP. RMAP notifies the status of PRU.

RMAP (Octet 3)

Bit 8	7	6	5	4	3	2	1	
0/1	-	-	-	-	-	-	-	Accept/Refuse PRU 1
-	0/1	-	-	-	-	-	-	Accept/Refuse PRU 2
-	-	0/1	-	-	-	-	-	Accept/Refuse PRU 3
-	-	-	0/1	-	-	-	-	Accept/Refuse PRU 4
-	-	-	-	0/1	-	-	-	Accept/Refuse PRU 5
-	-	-	-	-	0/1	-	-	Accept/Refuse PRU 6
-	-	-	-	-	-	0/1	-	Accept/Refuse PRU 7
-	-	-	-	-	-	-	0/1	Accept/Refuse PRU 8

RMAP (Octet 4)

Bit 8	7	6	5	4	3	2	1	
0/1	-	-	-	-	-	-	-	Accept/Refuse PRU 9
-	0/1	-	-	-	-	-	-	Accept/Refuse PRU 10
-	-	0/1	-	-	-	-	-	Accept/Refuse PRU 11
			:					:

RMAP (Octet 11)

Bit 8	7	6	5	4	3	2	1	
0/1	-	-	-	-	-	-	-	Accept/Refuse PRU 65
-	0/1	-	-	-	-	-	-	Accept/Refuse PRU 66
-	-	0/1	-	-	-	-	-	Accept/Refuse PRU 67
-	-	-	0/1	-	-	-	-	Accept/Refuse PRU 68
-	-	-	-	0/1	-	-	-	Accept/Refuse PRU 69
-	-	-	-	-	0/1	-	-	Accept/Refuse PRU 70
-	-	-	-	-	-	0/1	-	Accept/Refuse PRU 71
-	-	-	-	-	-	-	0/1	Accept/Refuse PRU 72

Map Origin (Octet 12)

Bit 8	7	6	5	4	
0	0	0	0	0	SCH 1
0	0	0	0	1	SCH 2
0	0	0	1	0	SCH 3
		:			:
1	1	1	1	1	SCH 32

Figure 7.16 CQI

7.3.3.9 Disconnection Type

This information element is used to notify disconnected connection-ID, etc.

Octet	Bit 8	7	6	5	4	3	2	1
1	Disconnection type							
	0	0	0	0	1	0	0	1
2	Disconnection Type Content Length							
3~*	Con-tinua-tion	Connection-ID				Disconnection Type		Re-served

Continuation (Octet 3)

Bit 8	
0	Last octet
1	Continuation (Note)

(Note) When continuation is set to 1, other connection-ID and disconnection type is followed to the next octet.

Connection-ID (Octet 3)

Bit 7	6	5	4	
0	0	0	0	Connection-ID 1
0	0	0	1	Connection-ID 2
0	0	1	0	Connection-ID 3
	:			:
1	1	1	1	Connection-ID 16

Disconnection Type (Octet 3)

Bit 3	2	
0	0	Release connection and transit to sleep state
0	1	Release connection and transit to idle state
Others		Reserved

Figure 7.17 Disconnection Type

7.3.3.10 Encryption Key Set

This information element is used to report the key for performing encryption.

Octet	Bit 8	7	6	5	4	3	2	1
1	Encryption key set							
	0	0	0	0	1	0	1	0
2	Encryption Key Set Content Length							
3~*	Encryption Key							

Figure 7.18 Encryption Key Set

7.3.3.11 Extension Function Number

This information element is used to notify global definition information pattern and area information number.

Octet	Bit 8	7	6	5	4	3	2	1
1	Extension Function Number							
	0	0	0	0	1	0	1	1
2	Extension Function Number Content Length							
3	Global Definition Information Pattern				Area Information Status Number			Re-served

Global Definition Information Pattern (Octet 3)

Bit 8	7	6	5	
0	0	0	0	Global definition information pattern 0
0	0	1	0	Global definition information pattern 1
	:			:
1	1	1	0	Global definition information pattern 7
	Other			Reserved

Area Information Status Number (Octet 3)

Bit 4	3	2	
0	0	0	No area information
0	0	1	Area information status number 1
	:		:
1	1	1	Area information status number 7

Figure 7.19 Extension Function Number

7.3.3.12 MS Performance

This information element is used to notify MCS, EXCH timing, etc.

Octet	Bit 8	7	6	5	4	3	2	1
1	MS Performance							
	0	0	0	0	1	1	0	0
2	MS Performance Content Length							
3	OFDM MCS for UL / SC MCS for UL							
4	OFDM MCS for UL / SC MCS for UL							
5	OFDM MCS for DL							
6	OFDM MCS for DL							
7	EXCH Timing			Self-owned Bandwidth				
8	Synthesizer	Error Correct Encoding				RF Number		Full Sub-carrier Mode
9	HARQ Method			Antenna Switch (UL)		Number of Layers (UL)		
10	Window Size			Retransmission Times (Note)			Com-bine	Sequence Number Expansion
11	MIMO (UL)							

(Note) MS notifies BS the maximum value that can correspond by MS performance. BS decides the retransmission time, and indicates it by communication parameter.

OFDM MCS for UL (Octet 3)

Bit 8	7	6	5	4	3	2	1	Modulation class [Puncturing rate, Efficiency]
0/1	-	-	-	-	-	-	-	BPSK [1 , 0.5] absent/present
-	0/1	-	-	-	-	-	-	BPSK [3/4 , 0.67] absent/present
-	-	0/1	-	-	-	-	-	QPSK [1 , 1] absent/present
-	-	-	0/1	-	-	-	-	QPSK [4/6 , 1.5] absent/present
-	-	-	-	0/1	-	-	-	16QAM [1 , 2] absent/present
-	-	-	-	-	0/1	-	-	16QAM [4/6 , 3] absent/present
-	-	-	-	-	-	0/1	-	64QAM [3/4 , 4] absent/present
-	-	-	-	-	-	-	0/1	64QAM [6/10 , 5] absent/present

OFDM MCS for UL (Octet 4)

Bit 8	7	6	5	4	3	2	1	
0/1	-	-	-	-	-	-	-	256QAM [4/6 , 6] absent/present
-	0/1	-	-	-	-	-	-	256QAM [8/14 , 7] absent/present
			Other					Reserved

SC MCS for UL (Octet 3)

Bit 8	7	6	5	4	3	2	1	Modulation class [Puncturing rate, Efficiency]
0/1	-	-	-	-	-	-	-	π/2 BPSK [1 , 0.5] absent/present
-	0/1	-	-	-	-	-	-	π/2 BPSK 3/4 , 0.67] absent/present
-	-	0/1	-	-	-	-	-	π/4 QPSK [1 , 1] absent/present
-	-	-	0/1	-	-	-	-	π/4 QPSK [4/6 , 1.5] absent/present
-	-	-	-	0/1	-	-	-	8PSK [3/4 , 2] absent/present
-	-	-	-	-	0/1	-	-	16QAM [1 , 2] absent/present
-	-	-	-	-	-	0/1	-	16QAM [4/6 , 3] absent/present
-	-	-	-	-	-	-	0/1	64QAM [3/4 , 4] absent/present

SC MCS for UL (Octet 4)

Bit 8	7	6	5	4	3	2	1	
0/1	-	-	-	-	-	-	-	64QAM [6/10 , 5] absent/present
-	0/1	-	-	-	-	-	-	256QAM [4/6 , 6] absent/present
-	-	0/1	-	-	-	-	-	256QAM [8/14 , 7] absent/present
			Other					Reserved

OFDM MCS for DL (Octet 5)

Bit 8	7	6	5	4	3	2	1	Modulation class [Puncturing rate, Efficiency]
0/1	-	-	-	-	-	-	-	BPSK [1 , 0.5] absent/present
-	0/1	-	-	-	-	-	-	BPSK [3/4 , 0.67] absent/present
-	-	0/1	-	-	-	-	-	QPSK [1 , 1] absent/present
-	-	-	0/1	-	-	-	-	QPSK [4/6 , 1.5] absent/present
-	-	-	-	0/1	-	-	-	16QAM [1 , 2] absent/present
-	-	-	-	-	0/1	-	-	16QAM [4/6 , 3] absent/present
-	-	-	-	-	-	0/1	-	64QAM [3/4 , 4] absent/present
-	-	-	-	-	-	-	0/1	64QAM [6/10 , 5] absent/present

OFDM MCS for DL (Octet 6)

Bit 8	7	6	5	4	3	2	1	
0/1	-	-	-	-	-	-	-	256QAM [4/6 , 6] absent/present
-	0/1	-	-	-	-	-	-	256QAM [8/14 , 7] absent/present
			Other					Reserved

EXCH Timing (Octet 7)

Bit 8	7	6	
0	0	0	Level 0
0	0	1	Level 1
0	1	0	Level 2
0	1	1	Level 3
1	0	0	Level 4
	Other		Reserved

Self-owned Bandwidth (Octet 7)

Bit 5	4	3	2	1	
0	0	0	0	0	1 SCH
0	0	0	0	1	2 SCHs
0	0	0	1	0	3 SCHs
		:			:
1	1	1	1	1	32 SCHs

Synthesizer (Octet 8)

Bit 8	Bit 7	
0	0	No center frequency switching capability (Note 1)
0	1	Center frequency switching time class 1 (Note 2)
1	0	Center frequency switching time class 2 (Note 3)
1	1	Center frequency switching time class 3

(Note 1) BS shall always assign same band to the MS.

(Note 2) When adjacent slots are used within/beyond a frame, BS shall assign same band to the MS.

(Note 3) When adjacent slots next to each other across the TX/RX or RX/TX switching timing are used, BS shall assign same band to the MS.

Error Correction Encoding (Octet 8)

Bit 6	Bit 5	Bit 4	
0/1	-	-	Convolutional encoding (Mandatory) absent/present
-	0/1	-	Turbo coding (Optional) absent/present
-	-	0/1	Reserved

RF Number (Octet 8)

Bit 3	Bit 2	
0	0	RF number 1
0	1	RF number 2
1	0	RF number 3
1	1	RF number 4

Full Subcarrier Mode (Octet 8)

Bit 1	
0/1	Full Subcarrier Mode function absent / present

HARQ Method (Octet 9)

Bit 8	7	6	
0/1	-	-	CC-HARQ absent/present
-	0/1	-	IR-HARQ (Optional) absent/present
-	-	0/1	Reserved

Antenna Switch (UL) (Octet 9)

Bit 5	4	
0/1	-	Switching each slot absent / present
-	0/1	Switching each frame absent / present

Number of Layers (UL) (Octet 9)

Bit 3	2	1	
0/1	-	-	2 layers absent / present
-	0/1	-	4 layers absent / present
-	-	0/1	Reserved

Window Size (Octet 10)

Bit 8	7	6	
0	0	0	Reserved
0	0	1	Window size pattern 1
0	1	0	Window size pattern 2
	:		:
1	1	1	Window size pattern 7

Retransmission Times (Octet 10)

Bit 5	4	3	
0	0	0	No Retransmission
0	0	1	Once
0	1	0	Twice
	:		:
1	1	1	7 times

MAC Combine (Octet 10)

Bit 2	
0	MAC Combine absent
1	MAC Combine present

Sequence Number Expansion (Octet 10)

Bit 1	
0	Sequence Number Expansion absent
1	Sequence Number Expansion present

MIMO (UL) (Octet 11)

Bit 8	7	6	5	4	3	2	1	
0/1	-	-	-	-	-	-	-	Expansion bit (Note 1)
-	0/1	-	-	-	-	-	-	STBC absent / present
-	-	0/1	-	-	-	-	-	SM absent / present
-	-	-	0/1	-	-	-	-	EMB absent / present
			Other					Reserved

(Note 1) If Bit 8 is set “1”, MS and BS should consider next octet as expanded MIMO Information.

Figure 7.20 MS Performance

7.3.3.13 MSID

This information element is used to notify MSID.

Octet	Bit 8	7	6	5	4	3	2	1
1	MSID							
	0	0	0	0	1	1	0	1
2	MSID Content Length							
3	MSID Indicator			(MSB) MSID				
	0	0	0					
4	MSID							
5	MSID							
6	MSID							
7	MSID (LSB)					Reserved		

Octet	Bit 8	7	6	5	4	3	2	1
1	MSID							
	0	0	0	0	1	1	0	1
2	MSID Content Length							
3	MSID Indicator			(MSB) MSID				
	0	0	1					
4	MSID							
5	MSID							
6	MSID (LSB)					Reserved		

Octet	Bit 8	7	6	5	4	3	2	1
1	MSID							
	0	0	0	0	1	1	0	1
2	MSID Content Length							
3	MSID Indicator			(MSB) MSID				
	0	1	0					
4	MSID							
5	MSID							
6	MSID							
7	MSID							
8	MSID							
9	MSID (LSB)					Reserved		

MSID Indicator (Octet 3)

Bit 8	7	6	
0	0	0	34 bits MSID
0	0	1	24 bits MSID
0	1	0	50 bits MSID
	Other		Reserved

Figure 7.21 MSID

7.3.3.14 Protocol Version

This information element is used to notify protocol version.

Octet	Bit 8	7	6	5	4	3	2	1
1	Protocol Version							
	0	0	0	0	1	1	1	0
2	Protocol Version Content Length							
3	Protocol Version Number							

Protocol Version Number (Octet 3)

Bit 8	7	6	5	4	3	2	1	
-	-	-	-	-	-	-	0/1	Version 1 absent / present
-	-	-	-	-	-	0/1	-	Version 2 absent / present
Other								Reserved

Figure 7.22 Protocol Version

7.3.3.15 PRU Information

This information element is used to specify additional PRU.

Octet	Bit 8	7	6	5	4	3	2	1
1	PRU Information							
	0	0	0	0	1	1	1	1
2	PRU Information Content Length							
3	Map Timing (Note)	Map Origin (Note)					Reserved	
4	PRU Number							Re-served

(Note) Map timing and map origin are considered to be undefined, when assign channel type in "link setup request" message or "extension function response" message is CSCH.

Map Timing (Octet 3)

Bit 8	
0	Timing 1
1	Timing 2

Map Origin (Octet 3)

Bit 7	6	5	4	3	
0	0	0	0	0	SCH 1
0	0	0	0	1	SCH 2
0	0	0	1	0	SCH 3
		:			:
1	1	1	1	1	SCH 32

PRU Number (Octet 4)

Bit 8	7	6	5	4	3	2	
0	0	0	0	0	0	0	PRU 1
0	0	0	0	0	0	1	PRU 2
0	0	0	0	0	1	0	PRU 3
			:				:
1	1	1	1	1	1	1	PRU 128

Figure 7.23 PRU Information

7.3.3.16 QCS Information

This information element is used to notify QCS-ID.

Octet	Bit 8	7	6	5	4	3	2	1
1	QCS Information							
	0	0	0	1	0	0	0	0
2	QCS Information Content Length							
3	Connection Status							
4	Connection Status							

Connection Status (Octet 3)

Bit 8	7	6	5	4	3	2	1	
0/1	-	-	-	-	-	-	-	QCS-ID 1 connection absent/present
-	0/1	-	-	-	-	-	-	QCS-ID 2 connection absent/present
-	-	0/1	-	-	-	-	-	QCS-ID 3 connection absent/present
			:					:
-	-	-	-	-	-	-	0/1	QCS-ID 8 connection absent/present

(Note) Octet 3, Bit 8 (QCS-ID=1(for control)) is always set to 1 on sender. (Don't care for receiver)

Connection Status (Octet 4)

Bit 8	7	6	5	4	3	2	1	
0/1	-	-	-	-	-	-	-	QCS-ID 9 connection absent/present
-	0/1	-	-	-	-	-	-	QCS-ID 10 connection absent/present
-	-	0/1	-	-	-	-	-	QCS-ID 11 connection absent/present
			:					:
-	-	-	-	-	-	-	0/1	QCS-ID 16 connection absent/present

Figure 7.24 QCS Information

7.3.3.17 QoS

This information element is used to notify QoS.

Octet	Bit 8	7	6	5	4	3	2	1
1	QoS							
	0	0	0	1	0	0	0	1
2	QoS Content Length							
3	Reserved				QoS Number			

<u>QoS Number (Octet 3)</u>

Bit 4	3	2	1	
0	0	0	0	LAC
0	0	0	1	PLC
0	0	1	0	nl-VRC
0	0	1	1	al-VRC
0	1	0	0	Ld-BE
0	1	1	0	Voice
	Other			Reserved

<u>Figure 7.25 QoS</u>

7.3.3.18 QCS Status

This information element is used to notify QCS Status.

Octet	Bit 8	7	6	5	4	3	2	1
1	QCS Status							
	0	0	0	1	0	0	1	0
2	QCS Status Content Length							
3	QCS-ID				Connection-ID			
4	Reserved				QoS Number			
5	QCS-ID				Connection-ID			
6	Reserved				QoS Number			
:	:							
33	QCS-ID				Connection-ID			
34	Reserved				QoS Number			

(Note) Omit the setting of QCS-ID=1 on sender. And receiver ignores setting of QCS-ID=1.
(Note) Omit the setting of unused QCS(s).

QCS-ID (Octet 3~33)

Bit 4	3	2	1	
0	0	0	0	QCS-ID 1
0	0	0	1	QCS-ID 2
0	0	1	0	QCS-ID 3
	:			:
1	1	1	1	QCS-ID 16

(Note) Omit the setting of QCS-ID=1 on sender. And receiver ignores setting of QCS-ID=1.

Connection-ID (Octet 3~33)

Bit 4	3	2	1	
0	0	0	0	Connection-ID 1
0	0	0	1	Connection-ID 2
0	0	1	0	Connection-ID 3
	:			:
1	1	1	1	Connection-ID 16

QoS Number (Octet 4~34)

Bit 8	7	6	5	
0	0	0	0	QoS Number 1
0	0	0	1	QoS Number 2
0	0	1	0	QoS Number 3
	:			:
1	1	1	1	QoS Number 16

Figure 7.26 QCS Status

7.3.3.19 Scheduling Information

This information element is used to notify scheduling information.

Octet	Bit 8	7	6	5	4	3	2	1
1	Scheduling Information							
	0	0	0	1	0	0	1	1
2	Scheduling Information Content Length							
3	Scheduling Term				Reserved			
4	Active Frame							
5	Active Frame							

Scheduling Term (Octet 3)

Bit 8	7	6	5	
0	0	0	0	1 TDMA frame
0	0	0	1	2 TDMA frames
0	0	1	0	3 TDMA frames
:				:
1	1	1	1	16 TDMA frames

Active Frame (Octet 4)

Bit 8	7	6	5	4	3	2	1	
0/1	-	-	-	-	-	-	-	Frame 1 not active/active
-	0/1	-	-	-	-	-	-	Frame 2 not active/active
-	-	0/1	-	-	-	-	-	Frame 3 not active/active
-	-	-	0/1	-	-	-	-	Frame 4 not active/active
-	-	-	-	0/1	-	-	-	Frame 5 not active/active
-	-	-	-	-	0/1	-	-	Frame 6 not active/active
-	-	-	-	-	-	0/1	-	Frame 7 not active/active
-	-	-	-	-	-	-	0/1	Frame 8 not active/active

Active Frame (Octet 5)

Bit 8	7	6	5	4	3	2	1	
0/1	-	-	-	-	-	-	-	Frame 9 not active/active
-	0/1	-	-	-	-	-	-	Frame 10 not active/active
-	-	0/1	-	-	-	-	-	Frame 11 not active/active
-	-	-	0/1	-	-	-	-	Frame 12 not active/active
-	-	-	-	0/1	-	-	-	Frame 13 not active/active
-	-	-	-	-	0/1	-	-	Frame 14 not active/active
-	-	-	-	-	-	0/1	-	Frame 15 not active/active
-	-	-	-	-	-	-	0/1	Frame 16 not active/active

Figure 7.27 Scheduling Information

7.3.3.20 Source BS-info

This information element is used to notify source BS-info before performing handover.

Octet	Bit 8	7	6	5	4	3	2	1
1	Source BS-info							
	0	0	0	1	0	1	0	0
2	Source BS-info Content Length							
3	(MSB)		BS-info					
4	BS-info							
5	BS-info							
6	BS-info							
7	BS-info							(LSB)

Figure 7.28 Source BS-info

7.3.3.21 Target BS-info

This information element is used to notify BS-info of handover schedule.

Octet	Bit 8	7	6	5	4	3	2	1
1	Target BS-info							
	0	0	0	1	0	1	0	1
2	Target BS-info Content Length							
3	(MSB)		BS-info					
4	BS-info							
5	BS-info							
6	BS-info							
7	BS-info							(LSB)

(Note) This information element is used to notify BS-info before performing handover.

Figure 7.29 Target BS-info

7.3.3.22 MAP Origin

This information element is used to notify MAP origin.

Octet	Bit 8	7	6	5	4	3	2	1
1	MAP Origin							
	0	0	0	1	0	1	1	0
2	MAP Origin Content Length							
3	Map Timing	Map Origin					Reserved	

Map Timing (Octet 3)

Bit 8	
0	Timing 1
1	Timing 2

Map Origin (Octet 3)

Bit 7	6	5	4	3	
0	0	0	0	0	SCH 1
0	0	0	0	1	SCH 2
0	0	0	1	0	SCH 3
		:			:
1	1	1	1	1	SCH 32

Figure 7.30 MAP Origin

7.3.3.23 MSID (SC)

This information element is used to notify MSID in Link Setup Request (SC) message. This information element has particular structure in order to reduce the message size.

Octet	Bit 8	7	6	5	4	3	2	1
1	Protocol version Number							
2	MSID Indicator 0	0	0	(MSB) MSID				
3	MSID							
4	MSID							
5	MSID							
6	MSID (LSB)					Reserved		Start Indica-tion

Octet	Bit 8	7	6	5	4	3	2	1
1	Protocol version Number							
2	MSID Indicator 0	0	1	(MSB) MSID				
3	MSID							
4	MSID							
5	MSID (LSB)			Reserved				Start Indica-tion

Octet	Bit 8	7	6	5	4	3	2	1
1	Protocol version Number							
2	MSID Indicator 0	1	0	(MSB) MSID				
3	MSID							
4	MSID							
5	MSID							
6	MSID							
7	MSID							
8	MSID (LSB)					Reserved		Start Indica-tion

<u>Protocol Version Number (Octet 1)</u>

Bit 8	7	6	5	4	3	2	1	
-	-	-	-	-	-	-	0/1	Version 1 absent / present
			Other					Reserved

MSID Indicator (Octet 2)

Bit 8	7	6	
0	0	0	34 bits MSID
0	0	1	24 bits MSID
0	1	0	50 bits MSID
	Other		Reserved

Start Indication (Octet 6/5/8)

Bit 4	
0	Extension function sequence absent
1	Extension function sequence present

Octet	Bit 8	7	6	5	4	3	2	1
1	Protocol Version Number							
	0	0	0	1	0	1	1	0
2	MAP Origin Content Length							
3	Map Timing	Map Origin					Reserved	

Figure 7.31 MSID (SC)

7.3.3.24 Power Report

This information element is used to notify ANCH transmission power margin by MS.

Octet	Bit 8	7	6	5	4	3	2	1
1	Power Report							
	0	0	0	1	0	1	1	1
2	Power Report Content Length							
3	Transmission Power Margin							

Transmission Power Margin (Octet 3)

Bit 8	7	6	5	4	3	2	1	
0	0	0	0	0	0	0	0	0 dB
0	0	0	0	0	0	0	1	1 dB
			:					:
0	1	0	1	0	0	0	0	80 dB
			Other					Reserved

(Note) 1dB unit

Figure 7.32 Power Report

7.3.3.25 Report Indication

This information element is used to indicate of transmitting each CQI Report and Power Report, or both.

Octet	Bit 8	7	6	5	4	3	2	1
1	Report Indication							
	0	0	0	1	1	0	0	0
2	Report Indication Content Length							
3	Report Indication Content		Reserved					

Report Indication Content (Octet 3)

Bit 8	Bit 7	
0/1	-	CQI Request absent/present
-	0/1	Power Report Request absent/present

Figure 7.33 Report Indication

7.3.3.26 Encryption Key Information

This information element is used to notify encryption key information.

Octet	Bit 8	7	6	5	4	3	2	1
1	Encryption Key Information							
	0	0	0	1	1	0	0	1
2	Encryption Key Information Content Length							
6	Key Lifetime							

Key Lifetime (Octet 6)

Key Lifetime notifies MS of encryption key lifetime.

Figure 7.34 Encryption Key Information

7.3.3.27 MIMO Information

This information element is used to negotiate or change MIMO type for ANCH.

Octet	Bit 8	7	6	5	4	3	2	1
1	MIMO Information							
	0	0	0	1	1	0	1	0
2	MIMO Information Content Length							
3	ANCH MIMO (UL)		ANCH MIMO (DL)		SDMA Stream Number Information			

ANCH MIMO (UL) (Octet 3)

Bit 8	Bit 7	
0	0	SISO
0	1	2 layers STBC
1	0	4 layers STBC
1	1	Reserved

ANCH MIMO (DL) (Octet 3)

Bit 6	Bit 5	
0	0	SISO
0	1	2 layers STBC
1	0	4 layers STBC
1	1	Reserved

SDMA Stream Number Information (Octet 3)

Bit 4	Bit 3	Bit 2	Bit 1	
0	0	0	0	Reserved
0	0	0	1	SDMA Stream Number Information = 1
0	0	1	0	SDMA Stream Number Information = 2
	:			:
1	1	0	0	SDMA Stream Number Information = 12
	Other			Reserved

Figure 7.35 MIMO Information

7.3.3.28 ICH Continuation Transmission Information

This information element is used to start and stop ICH Continuation Transmission .

Octet	Bit 8	7	6	5	4	3	2	1
1	ICH Continuation Transmission Information							
	0	0	0	1	1	0	1	1
2	ICH Continuation Transmission Information Content Length							
3	ICH Transmission Times (UL)				ICH Transmission Times (DL)			

<u>ICH Transmission Times (UL) (Octet 3)</u>

Bit 8	7	6	5	
0	0	0	0	Once (disable)
0	0	0	1	Twice
0	0	1	0	
	~			
1	0	0	1	10 times
	Other			Reserved

<u>ICH Retransmission times (DL) (Octet 3)</u>

Bit 8	7	6	5	
0	0	0	0	Once (disable)
0	0	0	1	Twice
0	0	1	0	
	~			
1	0	0	1	10 times
	Other			Reserved

<u>Figure 7.36 ICH Continuation Transmission Information</u>

7.3.4 Information Element Rules

7.3.4.1 Error process

This section describes about error processing of messages and information elements in Access Establishment Phase Control.

7.3.4.1.1 Protocol Identifier

When the message which has not protocol identifier “Access Establishment Phase Control” is received, receiver shall ignore the message.

7.3.4.1.2 Incomplete message

When the message of which actual length is shorter than expected is received, receiver shall ignore the message.

7.3.4.1.3 Unexpected message type or message sequence error

When unexpected message is received, receiver shall ignore the message and no state transition occurs.

7.3.4.1.4 Mandatory information element error

7.3.4.1.4.1 Missing mandatory information element

When the message which does not include mandatory information element(s) is received, receiver shall ignore the message and no state transition occurs.

7.3.4.1.4.2 Invalid mandatory information element

When the message which includes invalid mandatory information element(s) is received, the message shall be ignored at reception side, and no state transition carried out.
When the message which has longer data length than expected one is received, reception side shall ignore extra content(s).
When the message which has shorter data length than expected one is received, the message is identified as a message which contains contents error.

7.3.4.1.4.3 Unexpected mandatory information element

When the message which has unexpected mandatory information element(s) is received, receiver shall ignore the unexpected information element(s).
Other information elements shall be adopted if they are expected ones.

7.3.4.1.4.4 Unrecognized mandatory information element

When the message which has unrecognized mandatory information element(s) is received, receiver shall ignore the unrecognized information element(s).
Other information elements shall be adopted if they are recognized one.

7.3.4.1.5 Optional information element error

When a message which contains one or more invalid optional information elements is received, receiver acts only for information elements which contains valid contents.
When a information element which has longer content length than expected one is received, the information element is valid until the content length which is expected.
When a information element which has shorter content length than expected one is received, the information is recognized as error information element.

7.3.4.2 Information elements order

This section describes about the order of each information element for message transmission and reception, as follows.

<In case of message transmission>
Information elements are set from smaller information element code. Single octet information element is judged by filling the lower four bits with zero.

< In case of message reception >
Receiver does not care information element order.

(Note) Even if reception information elements are not set from smaller information element code, receiver always recognize as correct information elements.

7.3.4.3 Duplicated information elements

This section describes about the operation when duplicated information elements are set in the message, as follows.

<In case of message reception>
Receiver shall process only acceptable duplicated information elements from the top, and ignore subsequent unacceptable duplicated information elements.

(Note) The number of duplication of information elements is only one in the current standard.

Chapter 8 Sequence

8.1 Overview

In this section, the standard control sequences between BS and MS are described. The names of messages transmitted and received between MS and BS are defined in Chapter 7.

8.2 Sequence

8.2.1 Outgoing Call

Figure 8.1 shows sequence of an outgoing call.
The control order is as follows:

[1]LCH Assignment Request and Response
MS requests LCH assignment by transmitting “LCH assignment request“ message on TCCH to BS, and BS assigns a LCH by sending/transmitting “LCH assignment response” message on SCCH.

[2] Link Setup Request and Response
MS performs carrier sensing for the assigned LCH channel. MS notifies the start of communication by sending/transmitting “link setup request” message when it judges that the assigned channel is not interfered and available. MS also notifies BS the communication ability, MSID etc in this message. BS notifies MS the function to use in this communication by sending/transmitting “link setup response” message.

[3] Extension Function Request and Response
When the extra function of this LCH is necessary to be negotiated or changed, the content of the function change is notified by “extension function request and response” message.
This message can be omitted if it is not necessary. It is notified with “extension function request” message when this message is necessary.

[4] Connection Request
MS notifies the type of QoS connection to BS. The connection type in this case is outgoing call.

[5] Authentication
The authentication information is transmitted between BS and MS when it is necessary in this sequence. The authentication method is not specified in this document.

[6] Encryption Key Indication
BS transfers the encryption key to MS.

[7] Connection Response
BS notifies MS Connection-ID, QCS information, etc.

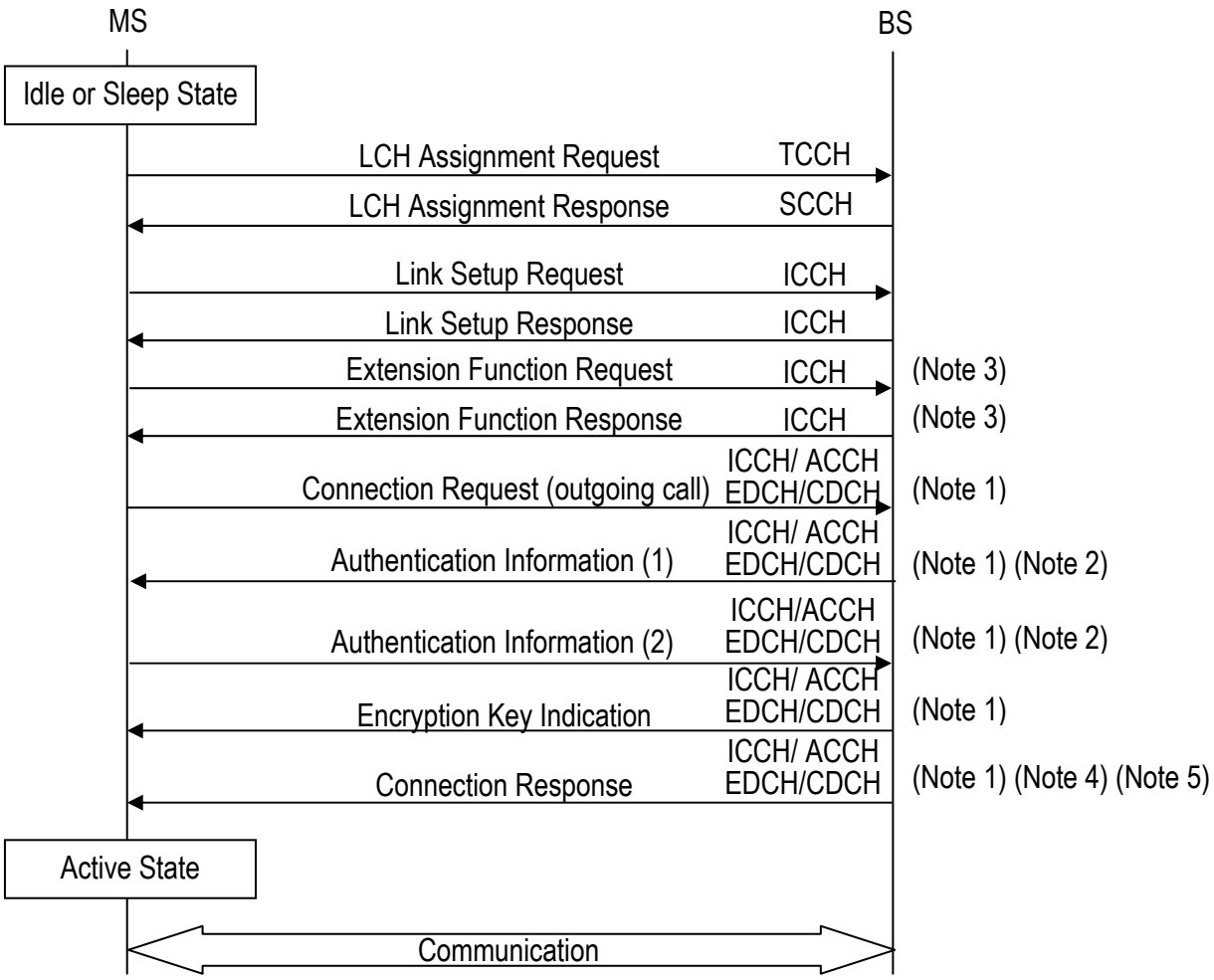

Figure 8.1 Outgoing Call Sequence

Note 1 When these control messages are transmitted with EDCH/CDCH/ICCH, the CD bit of the MAC header is set as 00 or 01.

Note 2 This is one example for the authentication sequence.

Note 3 This message is optional.

Note 4 When connection type is outgoing call with location registration, the sequence becomes a similar sequence with that of an outgoing call. At this time, the result of location registration is notified with “connection response” message.

Note 5 In case of having received Connection Response message including MSID information element, MS shall use temporary ID value which is set in MSID information element afterwards.

8.2.2 Incoming Call

Figure 8.2 shows incoming call sequence.
The control order is as follows:

[1] Paging and LCH Assignment Request and Response
Paging message is sent on PCH from BS. MS requests LCH assignment to BS by sending "LCH assignment request" message on TCCH, and BS assigns a LCH by sending "LCH assignment response" message on SCCH.

[2] Link Setup Request and Response
MS performs carrier sensing for the assigned LCH channel. MS notifies the start of communication by sending "Link Setup Request" message when it judges that this assigned channel is not interfered and available. In this message, MS also notifies BS of the communication ability, MSID etc. BS notifies MS the function to use in this communication by sending "link setup response" message.

[3] Extension Function Request and Response
When the extra function of this LCH is necessary to be negotiated or changed, the content of the function change is notified with "extension function request and response" message.
This message can be omitted if it is not necessary. It is notified with "extension function request" message when this message is necessary.

[4] Connection Request
MS notifies the type of QoS connection to BS. The connection type in this case is an incoming call.

[5] Authentication
The authentication information is transmitted between BS and MS when it is necessary in this sequence. The authentication method is not specified in this document.

[6] Encryption Key Indication
BS transfers the encryption key to MS.

[7] Connection Response
BS notifies MS Connection-ID, QCS information, etc.

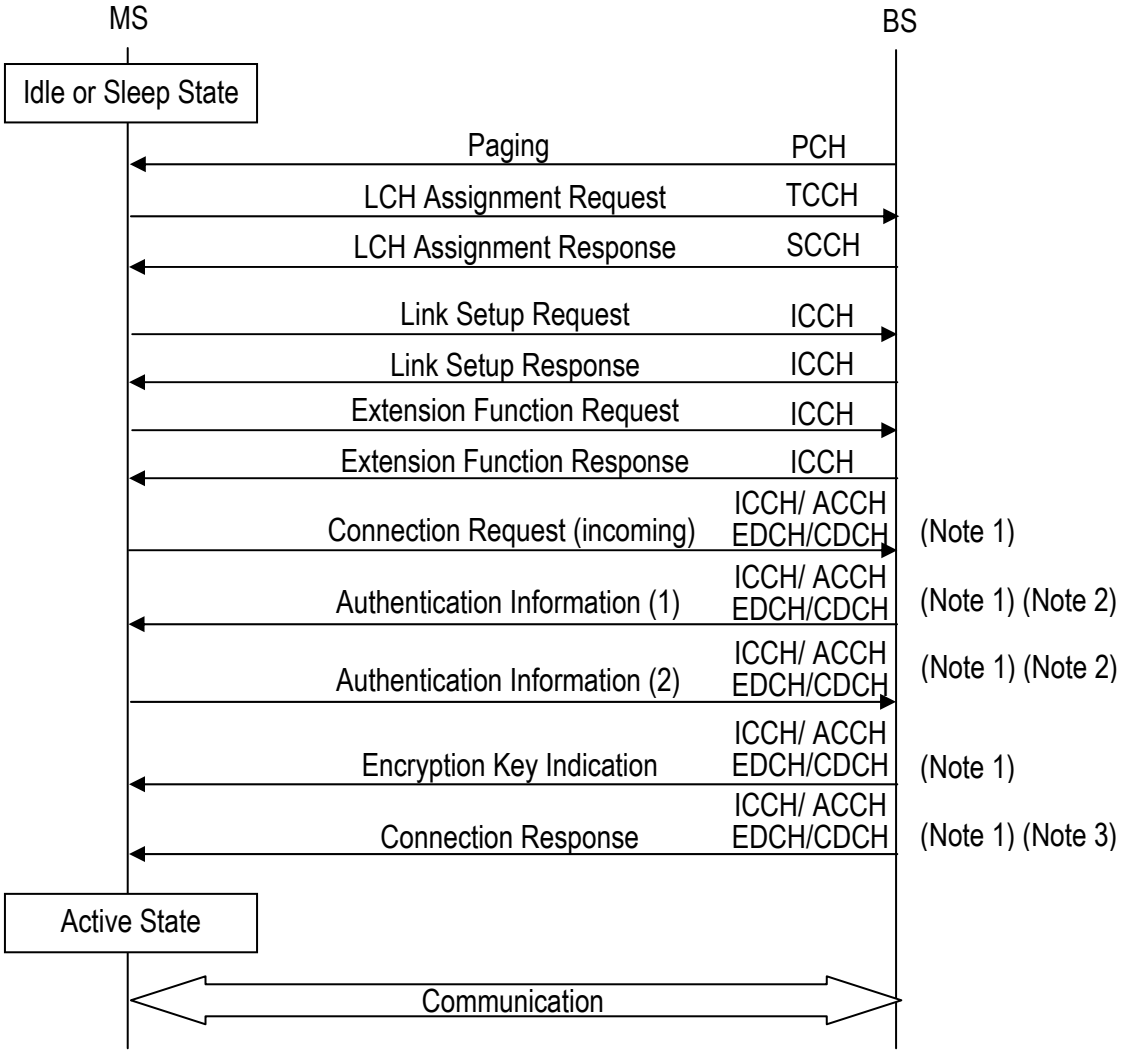

Figure 8.2 Incoming Call Sequence

Note 1 When control data is transmitted with EDCH/CDCH/ICCH, the CD bit of the MAC header is set as 00 or 01.

Note 2 This is one example for the authentication sequence.

Note 3 In case of having received Connection Response message including MSID information element, MS shall use temporary ID value which is set in MSID information element afterwards.

8.2.3 Release

8.2.3.1 Connection Release

8.2.3.1.1 Connection Release from MS

Figure 8.3 shows the sequence of connection release from MS.
“connection release” message is used when connection-ID is released.

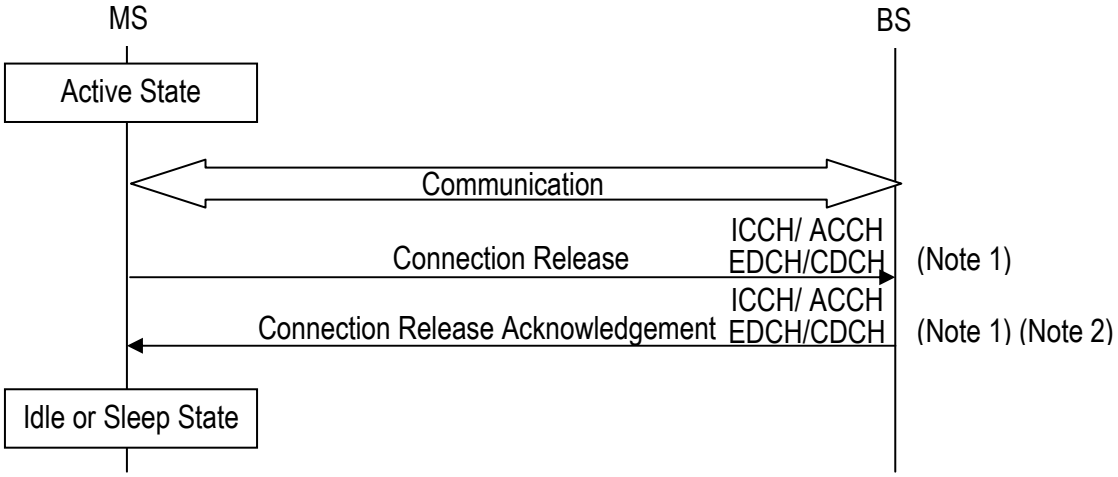

Figure 8.3 Connection Release from MS Sequence

Note 1 When control data is transmitted with EDCH/CDCH/ICCH, the CD bit of the MAC header is set as 00 or 01.

Note 2 In case of having received Connection Release Acknowledgement message including MSID information element, MS shall use temporary ID value which is set in MSID information element afterwards.

8.2.3.1.2 Connection Release from BS

Figure 8.4 shows the sequence of connection release from BS. “connection release” message is used when connection-ID is released.

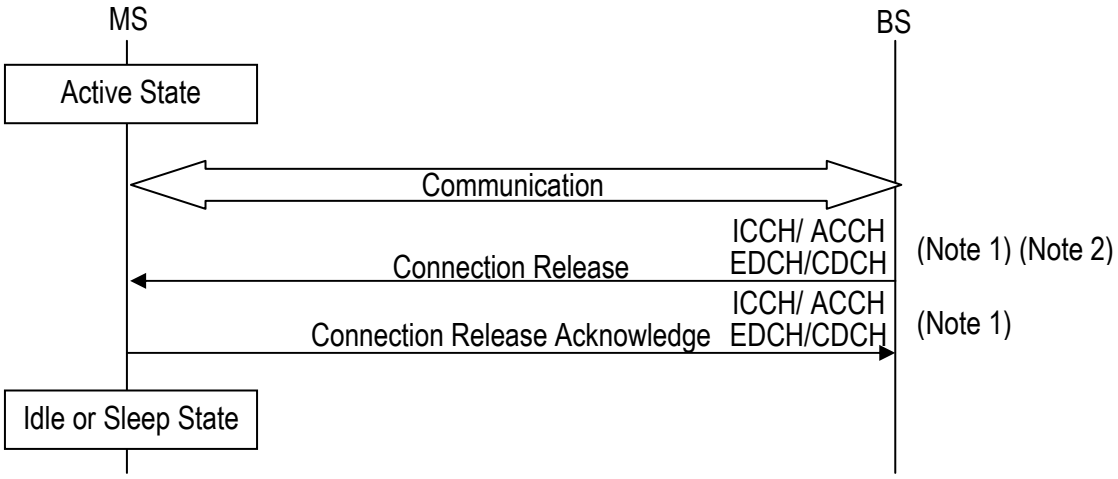

Figure 8.4 Connection release from BS Sequence

Note 1 When control data is transmitted with EDCH/CDCH/ICCH, the CD bit of the MAC header is set as 00 or 01.

Note 2 In case of having received Connection Release message including MSID information element, MS shall use temporary ID value which is set in MSID information element afterwards.

8.2.3.2 QCS Release

8.2.3.2.1 QCS Release Triggered by MS

Figure 8.5 shows the sequence of QCS release triggered by MS.
“QCS release” message is used when QCS information is released.

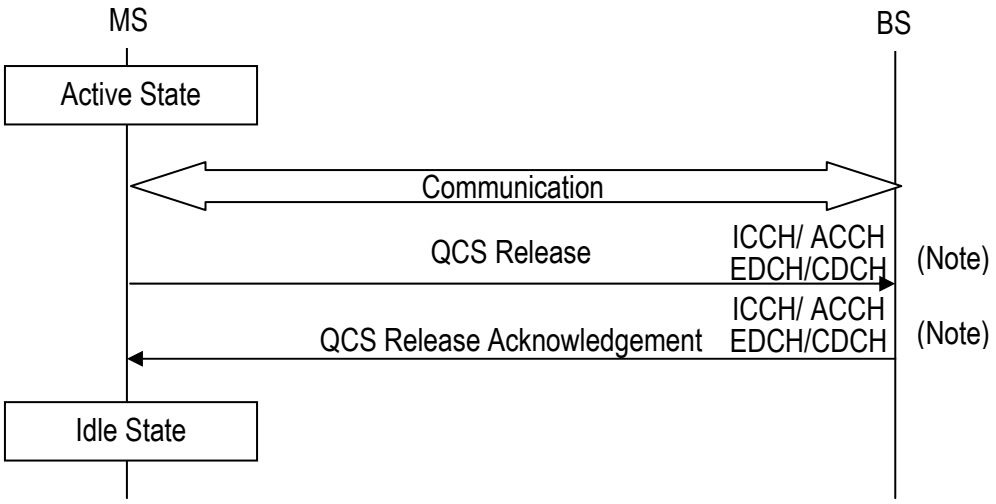

Figure 8.5 QCS Release Triggered by MS Sequence

Note When control data is transmitted with EDCH/CDCH/ICCH, the CD bit of the MAC header is set as 00 or 01.

8.2.3.2.2 QCS Release Triggered by BS

Figure 8.6 shows the sequence of QCS release triggered by BS.
When QCS is released, “QCS release” message is used.

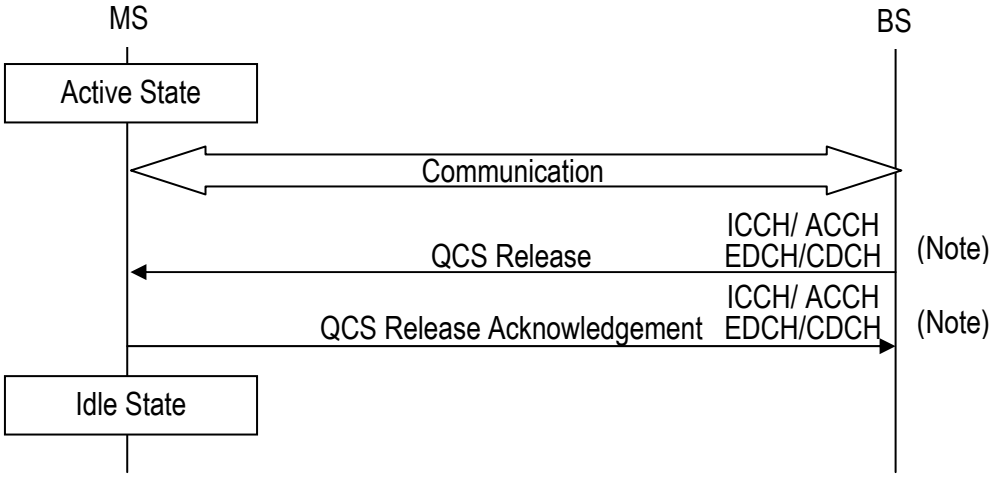

Figure 8.6 QCS Release Triggered by BS Sequence

Note When control data is transmitted with EDCH/CDCH/ICCH, the CD bit of the MAC header is set as 00 or 01.

8.2.4 Location Registration

Figure 8.7 shows the location registration sequence. Location registration is activated when MS moves to others paging area, or is powered at a different paging area. Home Location Register (HLR) control in network executes the location registration control. MS sends the location registration data on ICCH before the call connection. The control order is as follows:

[1]LCH Assignment Request and Response

MS requests LCH assignment to BS by sending “LCH assignment request“ message on TCCH, and BS assigns a LCH by sending “LCH assignment response” message on SCCH.

[2] Link Setup Request and Response

MS performs carrier sensing for the assigned LCH channel. MS notifies the start of communication by sending “link setup request” message when it judges that this assigned channel is not interfered and available. In this message, MS also notifies BS of the communication ability, MSID etc. BS notifies MS the function to use in this communication by sending “link setup response” message.

[3] Extension Function Request and Response

When the extra function of this LCH is necessary to be negotiated or changed, the content of the function change is notified with “extension function request and response” message.

This message can be omitted if it is not necessary. It is notified with “extension function request” message when this message is necessary.

[4] Connection Request

MS notifies the kind of QoS connection to BS. The connection type in this case is “location registration”.

[5] Authentication

The authentication information is transmitted between BS and MS when it is necessary in this sequence. The authentication method is not specified in this document.

[6] Encryption Key Indication

BS transfers the encryption key to MS.

[7] Connection Response

Connection-ID is omitted and the result of location registration is notified in a “connection response” message. Moreover, cause value in cause information element is set to no connection-ID, and connection is disconnected.

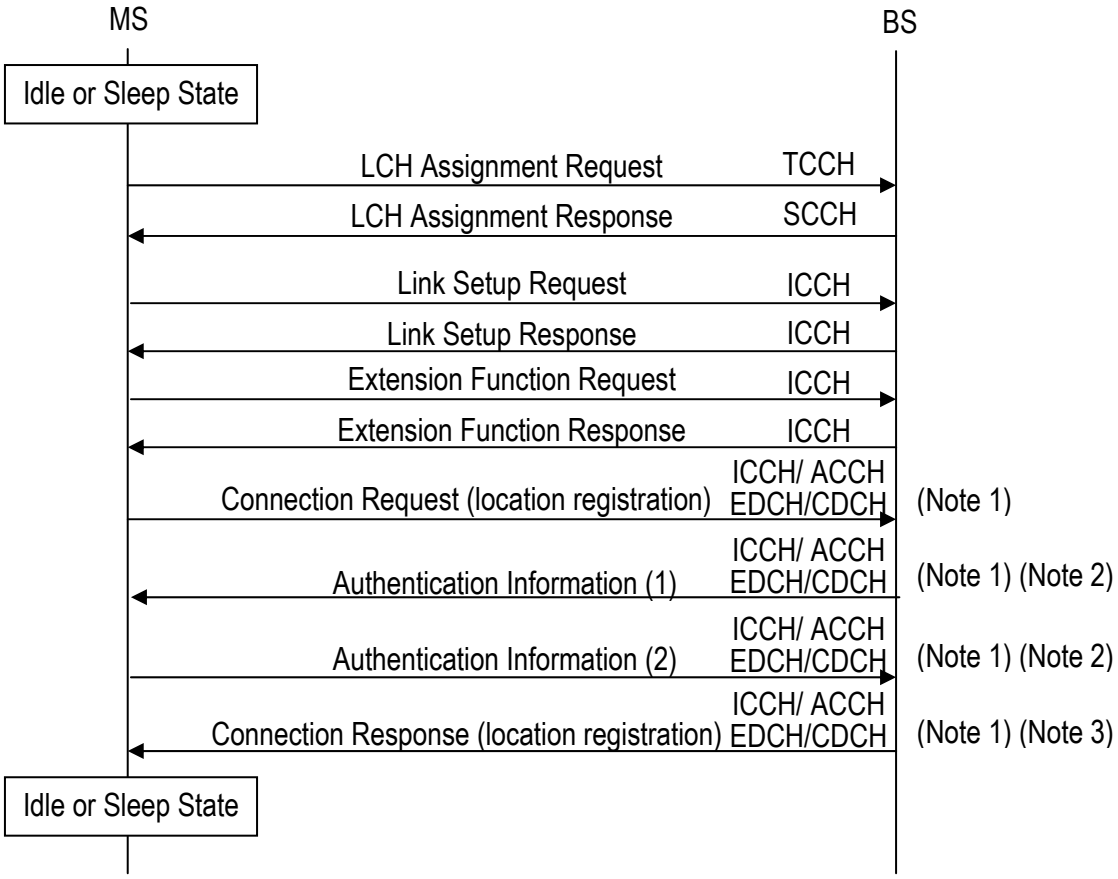

Figure 8.7 Location Registration Sequence

Note 1 When control data is transmitted with EDCH/CDCH/ICCH, the CD bit of the MAC header is set as 00 or 01.

Note 2 This is one example for the authentication sequence.

Note 3 Connection-ID is omitted when the result of location registration is notified. In addition, cause value in cause information element is set to no connection-ID and connection is disconnected.

8.2.5 ANCH/CSCH Switching

8.2.5.1 ANCH/CSCH Switching Triggered by MS

Figure 8.8 shows the sequence of ANCH/CSCH switching sequence triggered by MS.
When BS receives “ANCH/CSCH switching request” message, it transmits “ANCH/CSCH switching indication” message to MS and MS performs required functions as channel switching, ICH Continuation Transmission and MIMO.

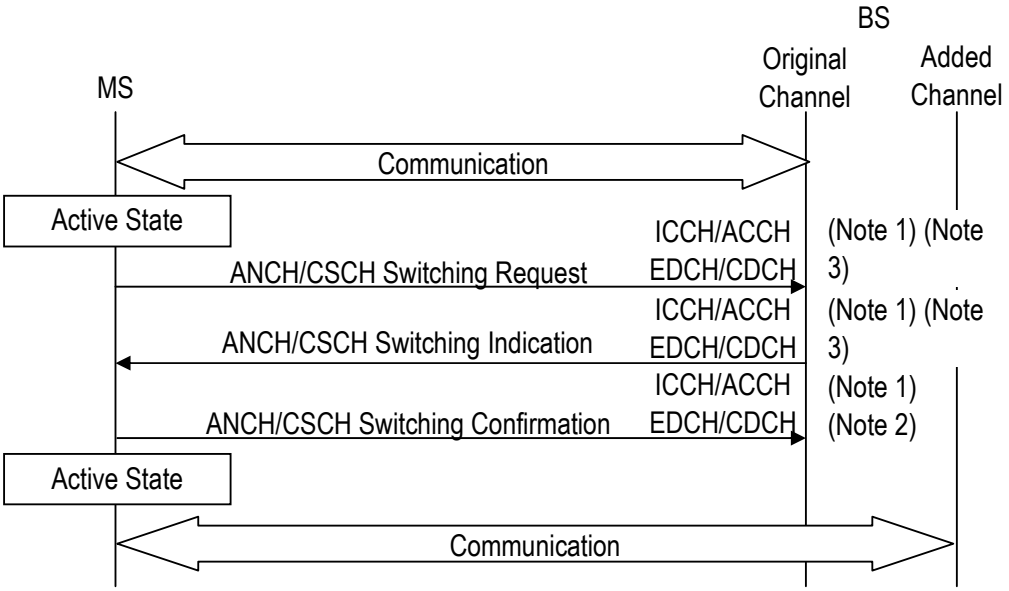

Figure 8.8 ANCH/CSCH Switching Triggered by MS Sequence

Note 1 This message is transmitted on by ICCH, while communicating in FM-Mode. This message is transmitted on ACCH or CDCH while communicating in QS-Mode.
Note 2 This message is mandatory when communicating in ANCH/CSCH scheduling mode (intermittent transmission).
Note 3 When ICH Continuation Transmission is required, ICH Continuation Transmission Information should be set.
Note 4 When MIMO is supported, MIMO Information should be set.

8.2.5.2 ANCH/CSCH Switching Triggered by BS

Figure 8.9 shows the sequence of ANCH/CSCH switching sequence triggered by BS.
BS transmits “ANCH/CSCH switching indication” message to MS When it detects the communication quality degradation and MS performs required functions as channel switching, ICH Continuation Transmission and MIMO.

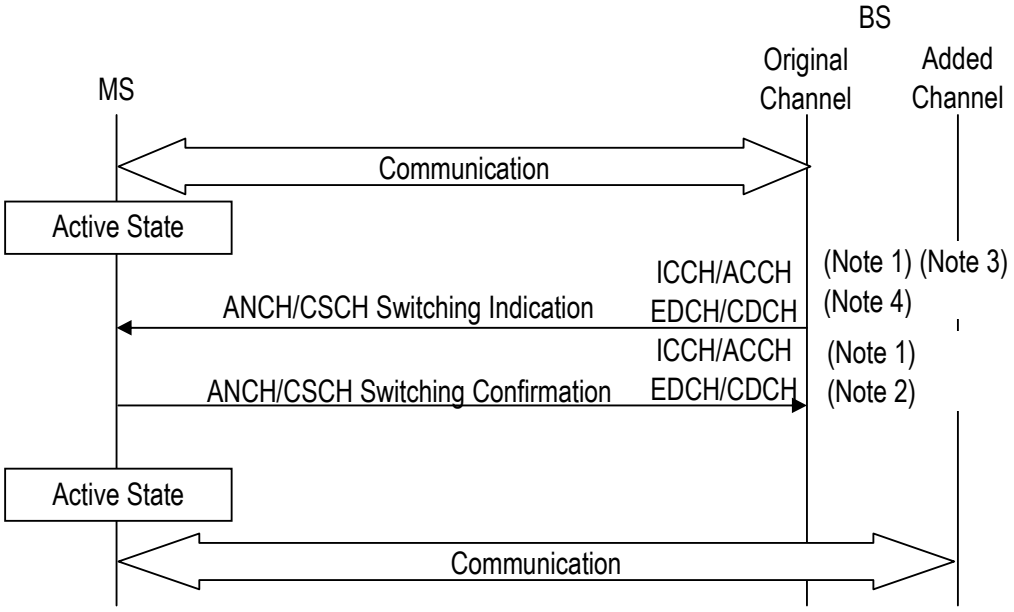

Figure 8.9 ANCH/CSCH Switching Triggered by BS Sequence

Note 1 This message is transmitted on ICCH while communicating in FM-Mode. This message is transmitted on ACCH or CDCH while communicating in QS-Mode.
Note 2 This message is mandatory when communicating in ANCH/CSCH scheduling mode (intermittent transmission).
Note 3 When ICH Continuation Transmission is required, ICH Continuation Transmission Information should be set.
Note 4 When MIMO is supported, MIMO Information should be set.

8.2.5.3 ANCH/CSCH Switching Rejection

Figure 8.10 shows the sequence of ANCH/CSCH switching rejection sequence.
BS transmits “ANCH/CSCH switching rejection” message to MS when BS receive “ANCH/CSCH switching request“ message from MS.

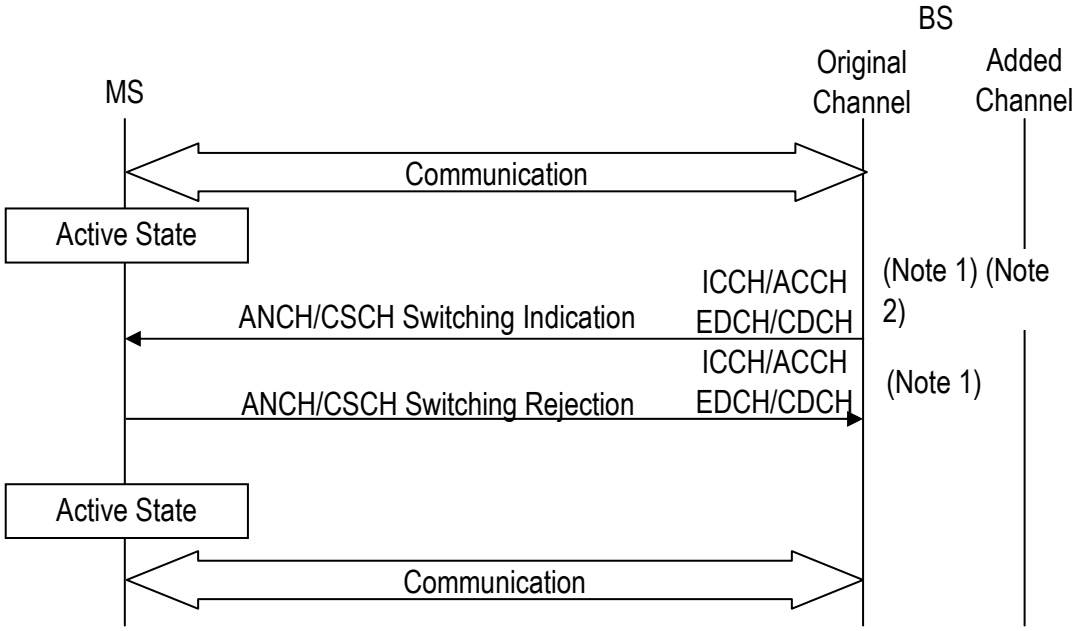

Figure 8.10 ANCH/CSCH Switching Rejection Sequence

Note 1 This message is transmitted on ICCH while communicating in FM-Mode. This message is transmitted on with ACCH or CDCH while communicating in QS-Mode.
Note 2 When ICH Continuation Transmission is required, ICH Continuation Transmission Information should be set.
Note 3 When MIMO is supported, MIMO Information should be set.

8.2.5.4 ANCH/CSCH Switching Re-request

Figure 8.11 shows the sequence of “ANCH/CSCH switching re-request” message triggered by BS.
BS sends “ANCH/CSCH switching indication” message to MS when it detects the communication quality degradation transmits. MS then transmits “ANCH/CSCH switching re-request” message instead of performing channel switching.

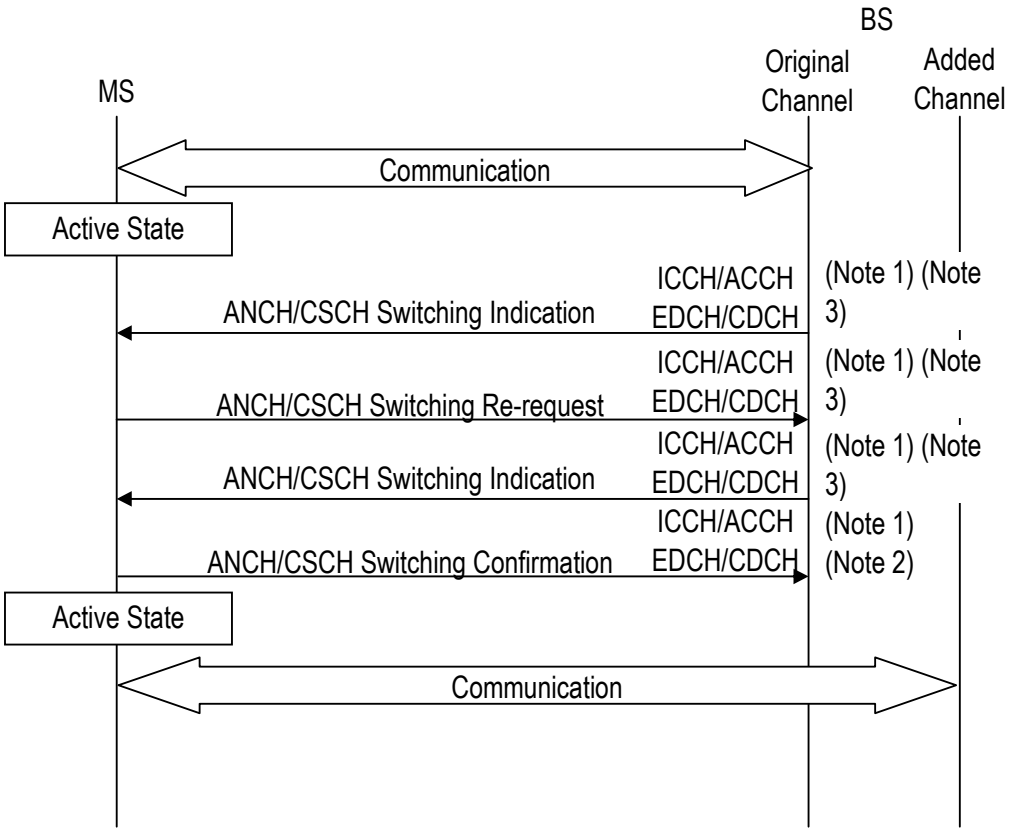

Figure 8.11 ANCH Switching Re-request Sequence

Note 1 This message is transmitted on ICCH while communicating in FM-Mode. This message is transmitted on ACCH or CDCH while communicating in QS-Mode.
Note 2 This message is mandatory when communicating in ANCH/CSCH scheduling mode (intermittent transmission).
Note 3 When ICH Continuation Transmission is required, ICH Continuation Transmission Information should be set.
Note 4 When MIMO is supported, MIMO Information should be set.

8.2.6 Handover

8.2.6.1 Normal Handover Triggered by BS

Figure 8.12 shows the normal handover sequence triggered by BS.
The control order is as follows:

[1] ANCH/CSCH Switching Request and Response
BS sends “ANCH/CSCH switching indication” message and indicates handover on detecting the communication quality degradation. MS shuts down the power and conduct transmission on receiving “ANCH/CSCH switching indication” message.

[2]LCH Assignment Request and Response
MS requests LCH assignment to BS by sending “LCH assignment request” message on TCCH, and BS assigns a LCH by sending “LCH assignment response” message on SCCH.

[3] Link Setup Request and Response
MS performs carrier sensing for the assigned LCH channel. MS notifies start of the communication by sending “link setup request” message when it judges that this assigned channel is not interfered and available. In this message, MS also notifies BS of the communication ability, MSID etc. BS notifies MS of the function to use in this communication by sending “link setup response” message.

[4] Extension Function Request and Response
When the extra function of this LCH is necessary to be negotiated or changed, the content of the function change is notified with “extension function request and response” message.
This message can be omitted if it is not necessary. It is notified with “extension function request” message when necessary.

[5] Connection Request
MS notifies the type of QoS connection to BS. The connection type in this case is handover.

[6] Authentication
The authentication information is transmitted between BS and MS when it is necessary in this sequence. The authentication method is not specified in this document.

[7] Encryption Key Indication
BS transfers the encryption key to MS.

[8] Connection Response
BS notifies MS of Connection-ID, QCS information, etc.

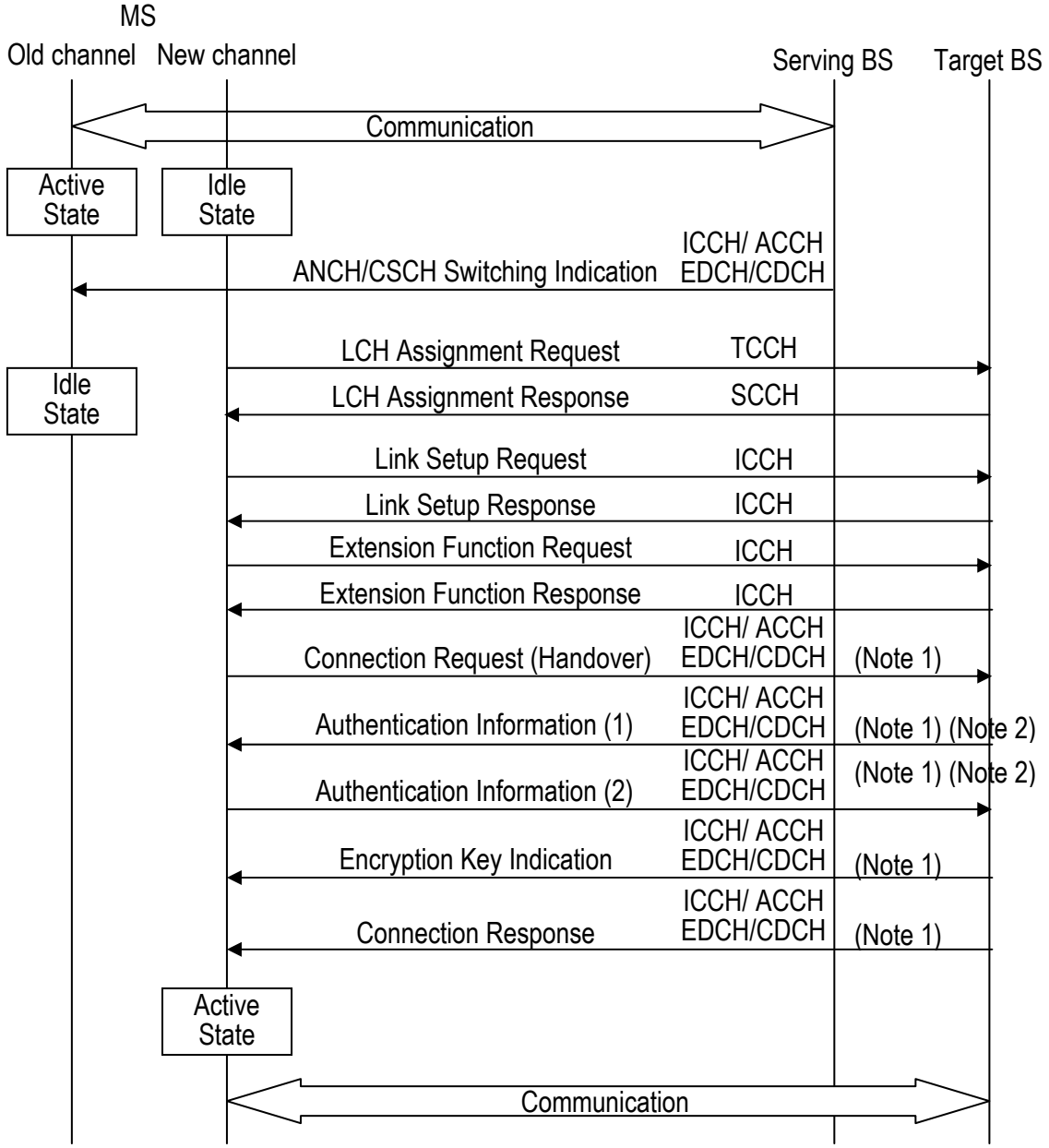

Figure 8.12 Normal Handover Triggered by BS Sequence

Note 1 When control data is transmitted with EDCH/CDCH/ICCH, the CD bit of the MAC header is set as 00 or 01.

Note 2 This is one example for the authentication sequence.

8.2.6.2 Normal Handover Triggered by MS

Figure 8.13 shows the normal handover sequence triggered by MS.
The control order is as follows:

[1] ANCH/CSCH Switching Request and Response
MS sends “ANCH/CSCH switching request“ message when it detects the communication quality degradation, and BS indicates handover by sending “ANCH/CSCH switching indication“ message. MS shuts down the power and conduct transmission on receiving “ANCH/CSCH switching indication“ message.

[2] LCH Assignment Request and Response
MS requests LCH assignment to BS by sending “LCH assignment request“ message on TCCH, and BS assigns a LCH by sending “LCH assignment response” message on SCCH.

[3] Link Setup Request and Response
MS performs carrier sensing for the assigned LCH channel. When MS notifies the start of communication by sending “link setup request” message when it judges that this assigned channel is not interfered and available. In this message, MS also notifies BS of the communication ability, MSID etc. BS notifies MS of the function to use in this communication by sending “link setup response” message.

[4] Extension Function Request and Response
When the extra function of this LCH is necessary to be negotiated or changed, the content of the function change is notified with “extension function request and response” message.
This message can be omitted if it is not necessary. It is notified with “extension function request” message when necessary.

[5] Connection Request
MS notifies the type of QoS connection to BS. The connection type in this case is handover.

[6] Authentication
The authentication information is transmitted between BS and MS when it is necessary in this sequence. The authentication method is not specified in this document.

[7] Encryption Key Indication
BS transfers the encryption key to MS.

[8] Connection Response
BS notifies MS Connection-ID, QCS information, etc.

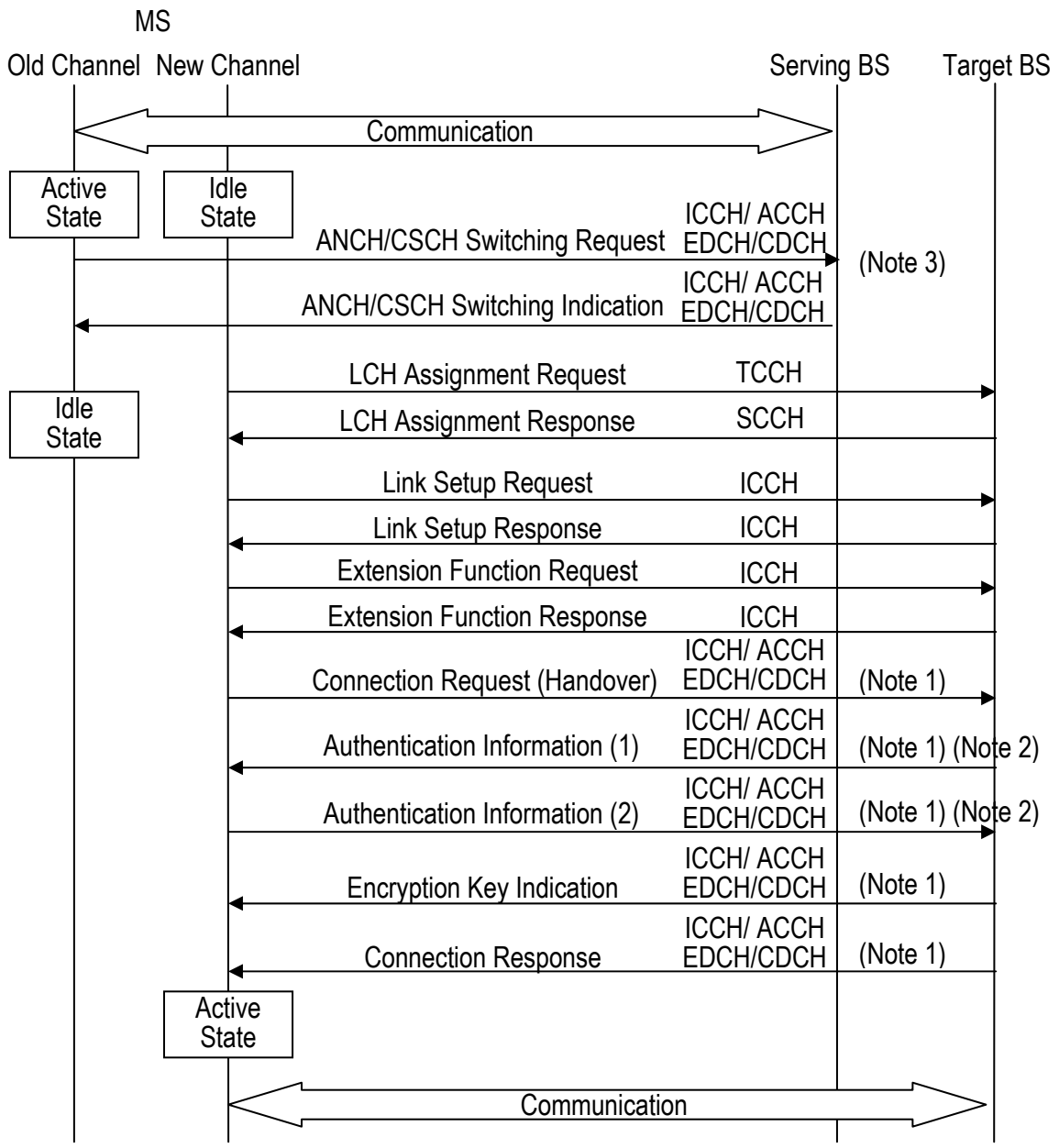

Figure 8.13 Normal Handover Triggered by MS Sequence

Note 1 When control data is transmitted with EDCH/CDCH/ICCH, the CD bit of the MAC header is set as 00 or 01.

Note 2 This is one example for the authentication sequence.

Note 3 Normal handover is performed when MS cannot find any target BS-info or communication quality degradation.

8.2.6.3 Seamless Handover

Figure 8.14 shows the seamless handover sequence.

The control order is as follows:

[1]TDMA Slot Limitation Request

To search BS in the surrounding, MS transmits “TDMA slot limitation request“ message to BS and makes the slot vacant. Then MS searches for other BSs in the surrounding.

[2] ANCH/CSCH Switching Request and Response

MS sends “ANCH/CSCH switching request“ message and indicates target BS to serving BS. Serving BS requests slot to target BS, and target BS responds slot to serving BS. Serving BS then sends “ANCH/CSCH switching indication” message to MS and indicates handover to target BS.

[3] LCH Assignment Request and Response

MS requests LCH assignment to BS by sending “LCH assignment request“ message on TCCH, and BS assigns a LCH by sending “LCH assignment response” message on SCCH.

[4] Link Setup Request and Response

MS performs carrier sensing for the assigned LCH channel. MS notifies the start of communication by sending “link setup request” message when it judges that this assigned channel is not interfered and available. In this message, MS also notifies BS of the communication ability, MSID etc. BS notifies MS of the function to use in this communication by sending “link setup response” message.

[5] Extension Function Request and Response

When the extra function of this LCH is necessary to be negotiated or changed, the content of the function change is notified with “extension function request and response” message

This message can be omitted if it is not necessary. It is notified with “extension function request” message when necessary.

[6] Connection Request

MS notifies the type of QoS connection to BS. The connection type in this case is handover.

[7] Authentication

The authentication information is transmitted between BS and MS when it is necessary in this sequence. The authentication method is not specified in this document.

[8] Encryption Key Indication

BS transfers the encryption key to MS.

[9] Connection Response

BS notifies MS of Connection-ID, QCS information, etc.

[10]Connection Release

After MS performed handover and transited to the active state, MS or BS sends “connection release” message and radio connection is released.

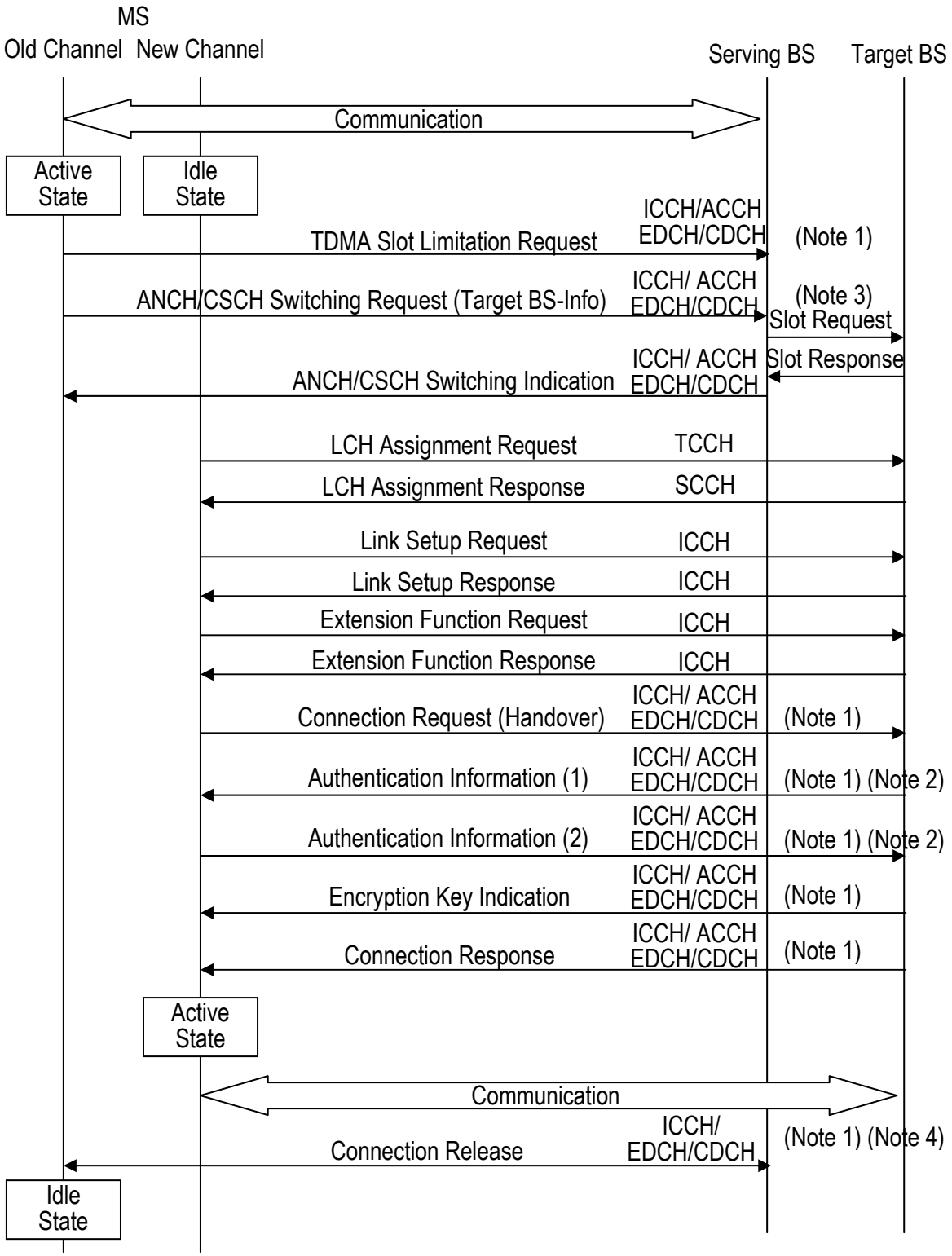

Figure 8.14 Seamless Handover Sequence

Note 1 When control data is transmitted with DCH, the CD bit of the MAC header is set as 00 or 01.

Note 2 This is one example for the authentication sequence.

Note 3 Seamless handover is done when there is target BS-info and the communication quality degrades.

Note 4 After MS performed handover and transit to active state, MS or BS sends “connection release” message and radio connection is released.

8.2.7 Link Channel Establishment

8.2.7.1 Link Channel Assignment

Figure 8.15 shows LCH assignment response sequence.
MS requests LCH assignment to BS by sending “LCH assignment request” message on TCCH. BS sends “LCH assignment response” message on SCCH when it cannot assign LCH.

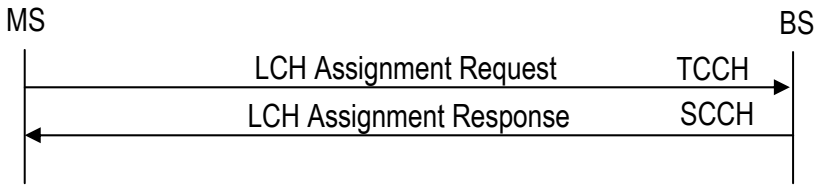

Figure 8.15 Link Channel Assignment Response Sequence

8.2.7.2 Link Channel Assignment Standby

Figure 8.16 shows LCH assignment request, standby and response sequence.
MS requests LCH assignment to BS by “LCH assignment request” message on TCCH, when BS cannot assign LCH temporarily, BS suspends assignment of LCH, and BS sends “LCH assignment standby” message on SCCH. When BS is ready to assign LCH, BS assigns LCH by “LCH assignment response” message SCCH.

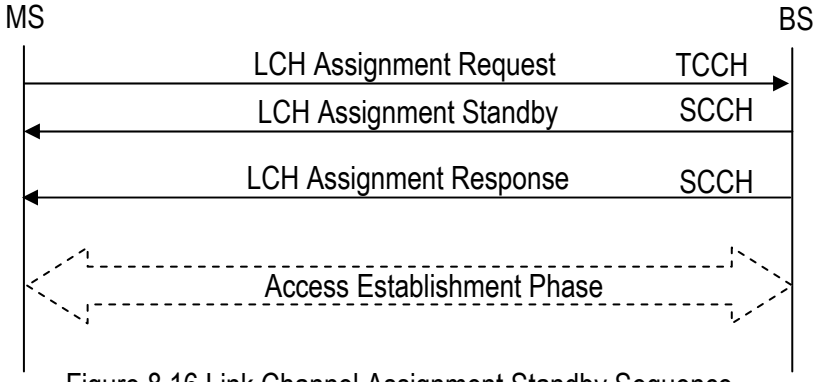

Figure 8.16 Link Channel Assignment Standby Sequence

8.2.7.3 Link Channel Re-request Sequence

Figure 8.17 shows LCH assignment re-request sequence.
MS requests LCH assignment to BS by sending “LCH assignment request” message on TCCH. After BS assigns LCH by sending “LCH assignment response” message, MS sends “LCH assignment re-request” message when it requests the assigned LCH to change to another LCH (e.g.: DL carrier sensing NG, etc). Then, BS assigns another LCH by sending “LCH assignment response” message.

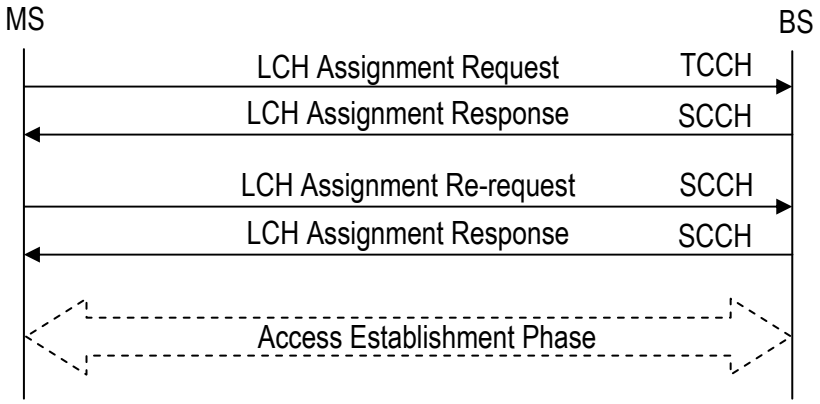

Figure 8.17 Link Channel Assignment Re-request Sequence

8.2.7.4 Link Channel Request Standby and Link Channel Assignment Re-request

Figure 8.18 shows LCH request standby and LCH assignment re-request sequence.
MS requests LCH assignment to BS by sending “LCH assignment request” message on TCCH. BS suspends assignment of LCH when it cannot assign LCH temporarily and sends “LCH assignment standby” message on SCCH. BS assigns LCH by “LCH assignment response” message on SCCH when it is ready to assign LCH. When MS requests assigned LCH to change to other LCH (e.g.: DL carrier sensing NG, etc), MS sends “LCH assignment re-request” message. BS will then assign another LCH by sending “LCH assignment response” message.

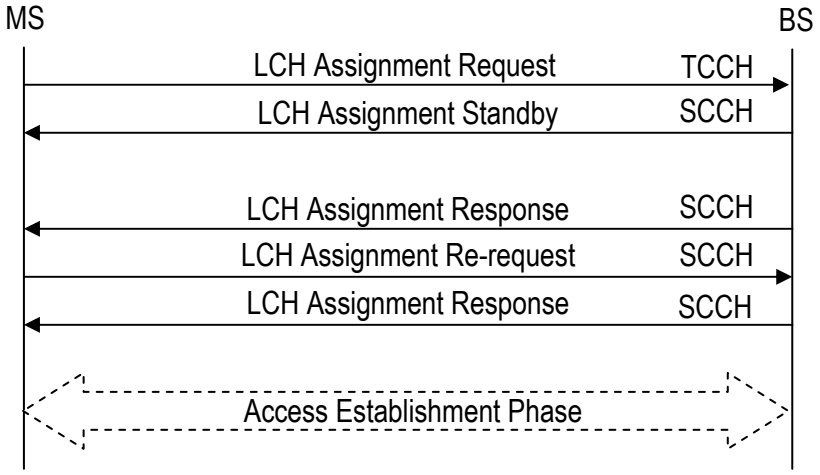

Figure 8.18 Link Channel Assignment Standby and Link Channel Assignment Re-request Sequence

8.2.7.5 Link Channel Assignment Rejection

Figure 8.19 shows LCH assignment rejection sequence.
MS requests LCH assignment to BS by sending “LCH assignment request” message on TCCH.
BS sends “LCH assignment reject” message on SCCH when it cannot assign LCH.

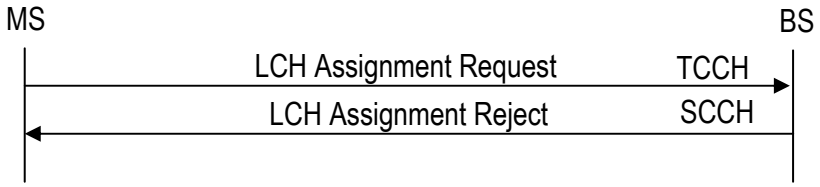

Figure 8.19 Link Channel Assignment Rejection Sequence

8.2.8 Additional QCS

8.2.8.1 Additional QCS

Figure 8.20 shows the additional QCS sequence.
MS sends “additional QCS request” message when it requests new QCS. BS assigns new QCS by sending “additional QCS response” message.

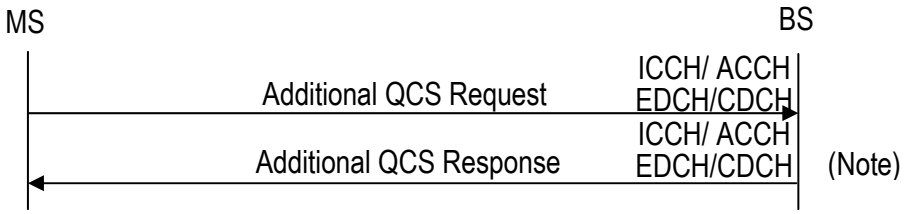

Figure 8.20 Additional QCS Sequence

Note BS sends “additional LCH indication” message or “additional QCS response” message when it received “additional QCS request” message from MS, according to the state of communication.

8.2.8.2 Additional QCS Request Indication

Figure 8.21 shows the additional QCS request indication sequence.
BS indicate to transmit “additional QCS request” message to MS. MS sends “additional QCS request” message when it requests new QCS. BS assigns new QCS by sending “additional QCS response” message.

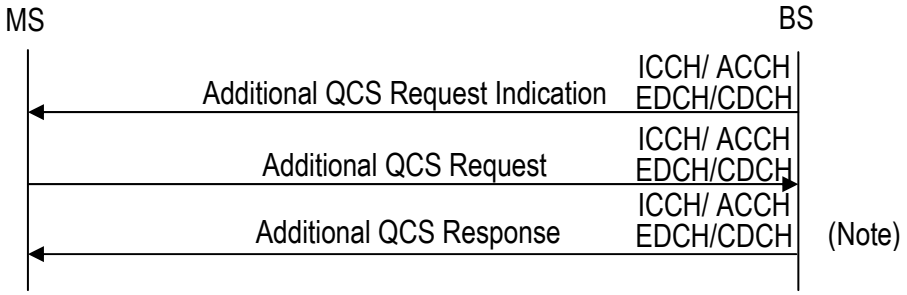

Figure 8.21 Additional QCS Request Indication Sequence

Note BS sends “additional LCH indication” message or “additional QCS response” message when it received “additional QCS request” message from MS, according to the state of communication.

8.2.8.3 Additional QCS Rejection

Figure 8.22 shows additional QCS rejection sequence.
MS sends “additional QCS request” message when it requests new QCS. BS sends “additional QCS rejection” message as response when it cannot assign specified QCS.

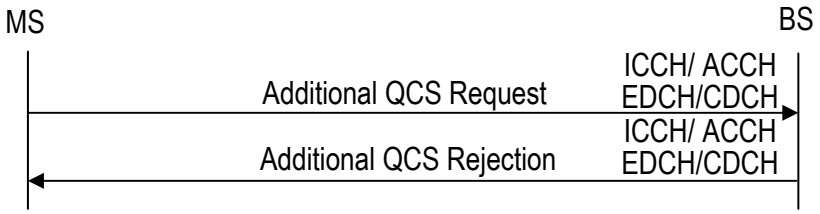

Figure 8.22 Additional QCS Sequence

8.2.8.4 Additional QCS with Extra LCH

Figure 8.23 the sequence to obtain the additional QCS with extra LCH.
MS sends “additional QCS request” message when it requests new QCS. BS sends “additional LCH indication” message when it needs LCH assignment in order to assign new QCS. MS sends “additional LCH confirmation” message to new added channel and establishes new LCH. BS then assigns new QCS on this LCH.

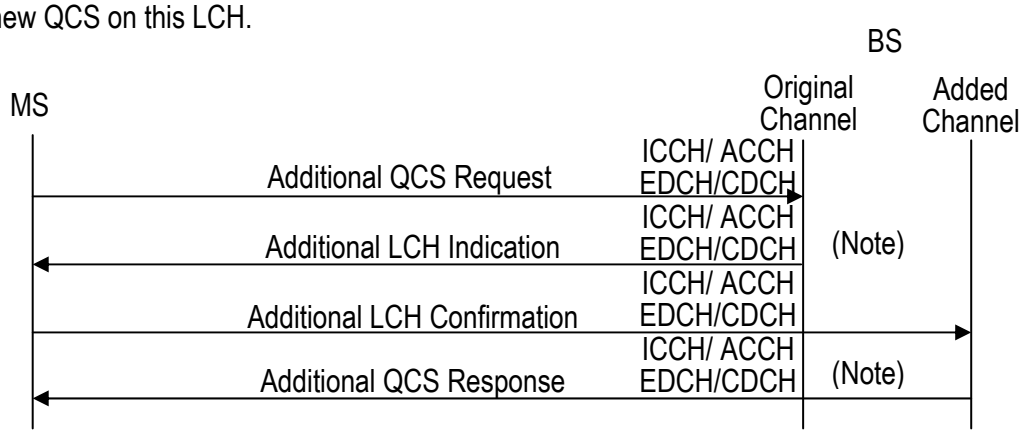

Figure 8.23 Additional QCS made through increasing LCH Sequence

Note BS sends “additional LCH indication” message or “additional QCS response” message on receiving “additional QCS request” message, according to the state of communication.

8.2.8.5 Additional QCS with Re-request of Extra LCH

Figure 8.24 shows the sequence to obtain the additional QCS with re-request of extra LCH.
MS sends “additional QCS request” message when it requests new QCS. BS sends “additional LCH indication” message when it needs LCH assignment in order to assign new QCS. MS sends “LCH assignment re-request” message when it requests assigned LCH to change to another LCH (e.g.: DL carrier sensing NG, etc). Then, BS assigns another LCH by sending “LCH assignment response” message. MS sends “additional LCH confirmation” message to new added channel and establishes new LCH. BS then assigns new QCS on this LCH.

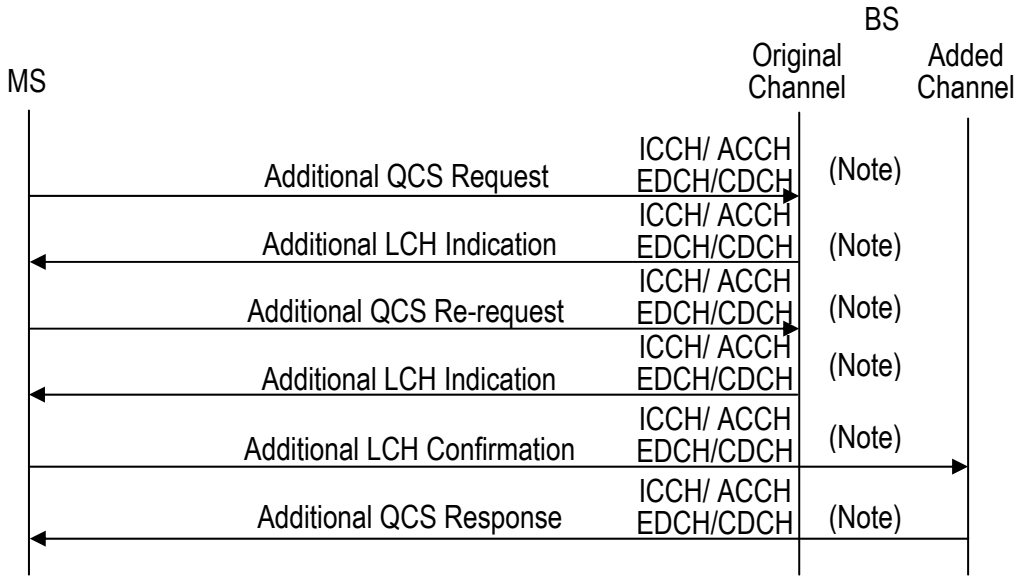

Figure 8.24 Additional QCS with Re-request of Extra LCH Sequence

Note BS sends “additional LCH indication” message or “additional QCS response” message, on receiving “additional QCS request” message, according to the state of communication.

8.2.9 Status Check

Status check is used to check Connection-ID and QCS-ID in BS and MS.

8.2.9.1 QCS Status Check Triggered by MS

Figure 8.25 shows status check triggered by MS sequence.
MS sends “QCS status enquiry request” message to BS to check the status, and BS answers the status by sending “QCS status enquiry response” message.

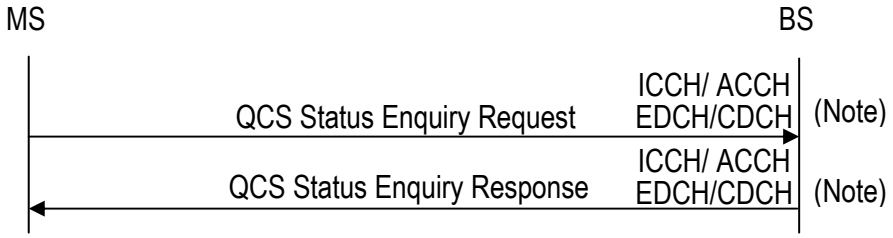

Figure 8.25 QCS Status Check Triggered by MS

Note When control data is transmitted with EDCH/CDCH/ICCH, the CD bit of the MAC header is set as 00 or 01.

8.2.9.2 QCS Status Check Triggered by BS

Figure 8.26 shows status check triggered by BS sequence.
BS sends “QCS status enquiry request” message to MS to check the status, and MS answers the status by sending “QCS status enquiry response” message.

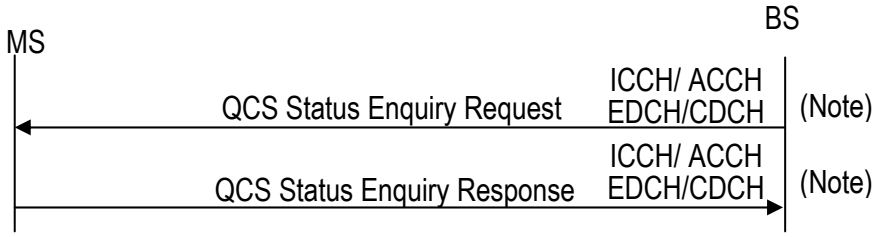

Figure 8.26 QCS Status Check Sequence Triggered by BS

Note When control data is transmitted with EDCH/CDCH/ICCH, the CD bit of the MAC header is set as 00 or 01.

8.2.10 CQI Transmission

8.2.10.1 CQI Report

Figure 8.27 shows CQI report from MS sequence. MS sends “CQI report” message to BS autonomously.

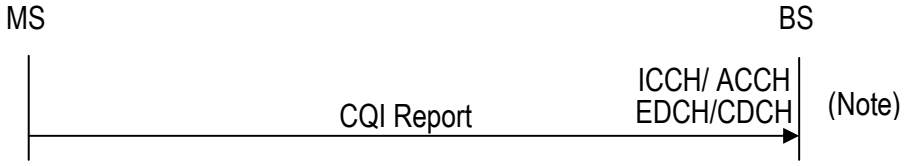

Figure 8.27 CQI Report Sequence

Note When control data is transmitted with EDCH/CDCH/ICCH, the CD bit of the MAC header is set as 00 or 01.

8.2.10.2 CQI Report Indication

Figure 8.28 shows “CQI request” message from BS sequence.
BS sends “CQI report indication” message to MS, and MS answers the CQI by sending “CQI report” message.

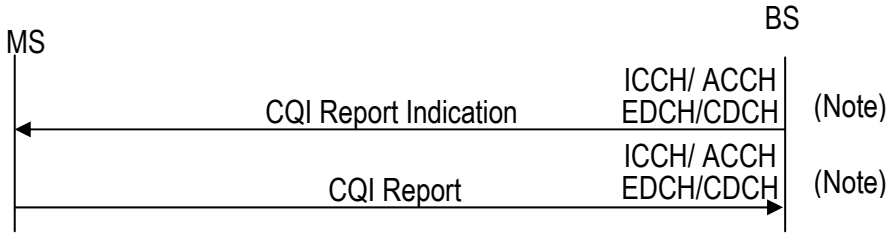

Figure 8.28 CQI Report Indication Sequence

Note When control data is transmitted with EDCH/CDCH/ICCH, the CD bit of the MAC header is set as 00 or 01.

8.3 Radio Connection Management Sequence

The radio connection management sequence is optional.
Radio connection control includes the following main functions:

- Paging;
- Establishment/ modification/ release of Radio connection, including e.g. assignment/ modification of MS identity, establishment/ modification/ release of SRB1 and SRB2, access class barring;

- Initial security activation, i.e. initial configuration of AS integrity protection (CP) and AS ciphering (CP, UP);
- Radio connection mobility including e.g. intra-frequency and inter-frequency handover, associated security handling, i.e. key and/ or algorithm change, specification of radio context information transferred between network nodes;
- Establishment/ modification/ release of RBs carrying user data (DRBs);
- Radio configuration control including e.g. assignment/ modification of ARQ configuration, HARQ configuration, DRX configuration;
- QoS control including assignment/ modification of semi-persistent configuration information for DL and UL, assignment/ modification of parameters for UL rate control in the MS, i.e. allocation of a priority and a prioritised bit rate (PBR) for each RB;
- Recovery from radio link failure;

8.3.1 Paging

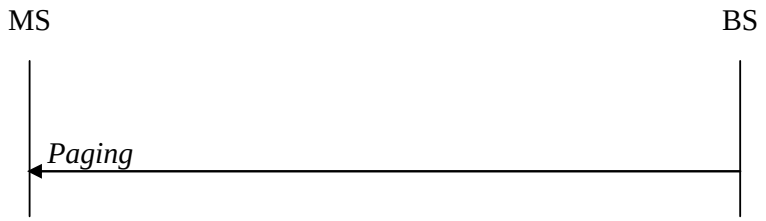

Figure 8.29 Paging

The paging information is provided to upper layers, which in response may initiate Radio connection establishment, e.g. to receive an incoming call.

BS initiates the paging procedure by transmitting the *Paging* message at the MS's paging occasion. BS may address multiple MSs. BS may also indicate a change of system information in the *Paging* message.

8.3.2 Radio connection establishment

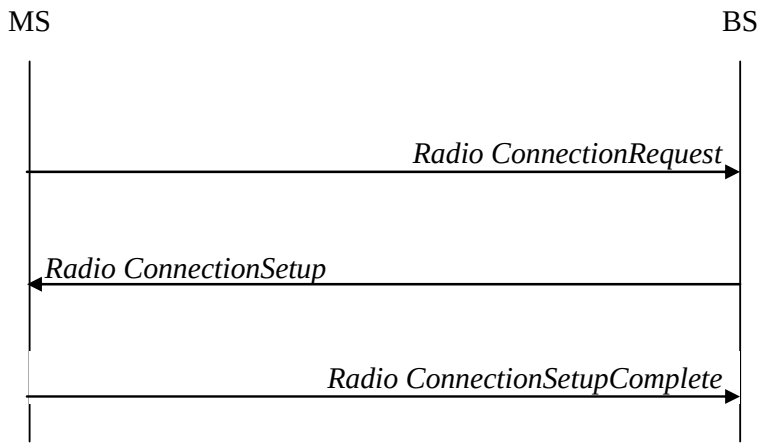

Figure 8.30 Radio connection establishment

The purpose of this procedure is to establish an Radio connection. Radio connection establishment involves SRB1 establishment.

Upon initiation of the procedure, the MS shall check ACB:

- SIBB1 provides cellBarred indicator; no timer. Used before camp.
- SIbb2 provides OriginatingCalls / EmergencyCalls and Originating Signaling 's ACB.
- mobile terminating access is always allowed except for T302 running.
- if access to cell is barred, MS shall inform upper layers about the failure to establish the Radio connection and that access barring is applicable
- if barring alleviation, MS shall inform upper layers about it.

The Radio connection Request message includes a MS Identity, establishment Cause for BS to identify whether it is emergency connection and the priority of the requested connection.

The Radio connection Setup message includes the dedicated radio resource configuration for the radio connection, which may includes the radio bearer ids and corresponding configurations to be added and released， and the configuration for MAC layer.

8.3.2.1 Radio connectionSetupComplete

The Radio connectionSetupComplete message includes possible registered core network information, etc.

8.3.3 Radio connection reconfiguration

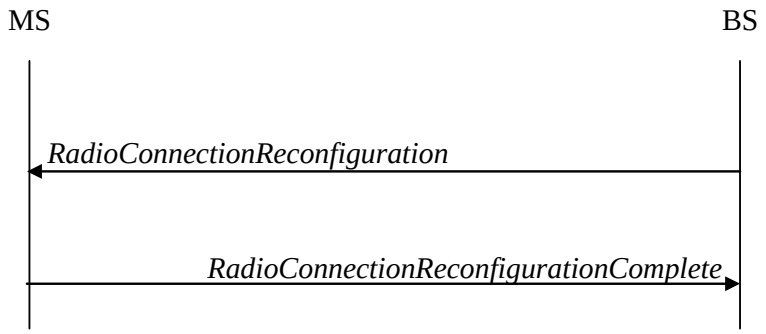

Figure 8.31 Radio connection reconfiguration, successful

The purpose of this procedure is to modify an Radio connection, e.g. to establish/ modify/ release RBs, to perform handover, to setup/ modify/ release measurements.

BS may initiate the Radio connection reconfiguration procedure to a MS in ACTIVE MODE. BS applies the procedure as follows:

- the mobilityControlInfo is included only when AS-security has been activated, and SRB2 with at least one DRB are setup and not suspended;
- the establishment of RBs (other than SRB1, that is established during Radio connection establishment) is included only when AS security has been activated.

The Radio connectionReconfiguration message includes the possible measurement configuration, possible mobility information and possible dedicated radio resource configuration, and may includes the security information for handover.

The Radio connectionReconfigurationComplete message is just a message for confirmation, not including the meaningful content.

8.3.4 Radio connection re-establishment

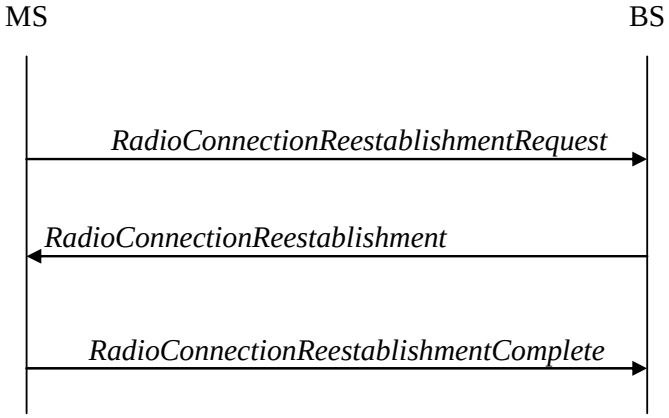

Figure 8.32 Radio connection re-establishment, successful

The purpose of this procedure is to re-establish the Radio connection, which involves the resumption of SRB1 operation and the re-activation of security.

A MS in ACTIVE MODE, for which security has been activated, may initiate the procedure in order to continue the Radio connection. The connection re-establishment succeeds only if the concerned cell is prepared i.e. has a valid MS context. In case BS accepts the re-establishment, SRB1 operation resumes while the operation of other radio bearers remains suspended. If AS security has not been activated, the MS does not initiate the procedure but instead moves to IDLE MODE directly.

BS applies the procedure as follows:

- to reconfigure SRB1 and to resume data transfer only for this RB;
- to re-activate AS security without changing algorithms.

The MS shall only initiate the procedure when AS security has been activated. The MS initiates the procedure when one of the following conditions is met:

- upon detecting radio link failure; or
- upon handover failure; or
- upon integrity check failure indication from lower layers; or
- upon an Radio connection reconfiguration failure;

Upon initiation of the procedure, the MS shall:

- stop timer T310, if running;
- start timer T311;

- suspend all RBs except SRB0;

- reset MSL1;

- apply the default physical channel configuration;

- apply the default semi-persistent scheduling configuration;

- apply the default MSL1main configuration;

- perform cell selection in accordance with the cell selection process;

The Radio connectionReestablishmentReques message includes a MS Identity, reestablishment Cause for BS to identify whether it is due to reconfiguration Failure, handover Failure, or other Failure.

The Radio connectionReestablishment message includes the dedicated radio resource configuration for the radio connection, which may includes the radio bearer ids and corresponding configurations to be added and released， and the configuration for MAC layer.

The Radio connectionReestablishmentComplete message is just a message for confirmation, not including the meaningful content.

8.3.5 Radio connection release

Figure 8.33 Radio connection release, successful

The purpose of this procedure is to release the Radio connection, which includes the release of the established radio bearers as well as all radio resources.

BS initiates the Radio connection release procedure to a MS in ACTIVE MODE.

The Radio connection Release message includes the release cause, possibly Redirected Carrier Information and possibly Mobility Control Information for Idle Mode.

8.3.6 Radio Link Failure

Upon receiving N310 consecutive "out of sync" indications from lower layers , start timer T310 (T1).

upon T310 expiry, consider radio link failure to be detected. If AS security has not been activated, start T311(T2) and initiate the connection re-establishment procedure .
Upon T311 expiry, the MS shall perform the actions upon leaving ACTIVE MODE.

8.4 Optional Mobility sequence

Measurements to be performed by a MS for mobility are classified:

- Intra-frequency BS measurements;
- Inter-frequency BS measurements;

For each measurement type one or several measurement objects can be defined (a measurement object defines e.g. the carrier frequency to be monitored).
For each measurement object one or several reporting configurations can be defined (a reporting configuration defines the reporting criteria). Three reporting criteria are used: event triggered reporting, periodic reporting and event triggered periodic reporting.
The association between a measurement object and a reporting configuration is created by a measurement identity. By using several measurement identities (one for each measurement object, reporting configuration pair) it is possible:

- To associate several reporting configurations to one measurement object and;
- To associate one reporting configuration to several measurement objects.

The measurements identity is as well used when reporting results of the measurements.
Measurement commands are used by BS to order the MS to start measurements, modify measurements or stop measurements.

In BS ACTIVE MODE state, network-controlled MS-assisted handovers are performed and various DRX cycles are supported.
In BS IDLE MODE state, cell reselections are performed and DRX is supported.

8.4.1 Mobility Management in IDLE State

8.4.1.1 Cell selection

- The MS may search each carrier in turn (“initial cell selection”) or make use of stored information to shorten the search (“stored information cell selection”).
- The MS seeks to identify a suitable cell; if it is not able to identify a suitable cell it seeks to identify an acceptable cell. When a suitable cell is found or if only an acceptable cell is found it camps on that cell and commence the cell reselection procedure:
- An acceptable cell is one for which the measured cell attributes satisfy the cell selection criteria

and the cell is not barred;

Transition to IDLE MODE:

- On transition from ACTIVE MODE to IDLE MODE, a MS should camp on the last cell for which it was in ACTIVE MODE or a cell/any cell of set of cells or frequency be assigned by radio connection aignalling in the state transition message.

Recovery from out of coverage:

- The MS should attempt to find a suitable cell in the manner described for stored information or initial cell selection above. If no suitable cell is found on any frequency or RAT the MS should attempt to find an acceptable cell.

8.4.1.2 Cell reselection

MS in IDLE MODE performs cell reselection. The principles of the procedure are the following:

- The MS makes measurements of attributes of the serving and neighbour cells to enable the reselection process:
- There is no need to indicate neighbouring cell in the serving cell system information to enable the MS to search and measure a cell i.e. BS relies on the MS to detect the neighbouring cells;
- For the search and measurement of inter-frequency neighbouring cells, only the carrier frequencies need to be indicated;
- Measurements may be omitted if the serving cell attribute fulfils particular search or measurement criteria.
- Cell reselection identifies the cell that the MS should camp on. It is based on cell reselection criteria which involves measurements of the serving and neighbour cells:
- Intra-frequency reselection is based on ranking of cells;
- For inter-frequency neighbouring cells, it is possible to indicate layer-specific cell reselection parameters (e.g., layer specific offset). These parameters are common to all neighbouring cells on a frequency;
- An NCL can be provided by the serving cell to handle specific cases for intra- and inter-frequency neighbouring cells. This NCL contains cell specific cell reselection parameters (e.g., cell specific offset) for specific neighbouring cells;
- Black lists can be provided to prevent the MS from reselecting to specific intra- and inter-frequency neighbouring cells;
- Cell reselection can be speed dependent;
- Cell reselection parameters are applicable for all MSs in a cell, but it is possible to configure

specific reselection parameters per MS group or per MS.

- Cell access restrictions, which consist of access class (AC) barring and cell reservation (e.g. for cells "reserved for operator use") applicable for mobiles in idle state.

8.4.2 Mobility Management in active state

8.4.2.1 General

The Mobility Support for MSs in active state handles all necessary steps for relocation/handover procedures, like processes that precede the final HO decision on the source network side (control and evaluation of MS and BS measurements taking into account certain MS specific area restrictions), preparation of resources on the target network side, commanding the MS to the new radio resources and finally releasing resources on the (old) source network side. It contains mechanisms to transfer context data between BSs, and to update node relations on C-plane and U-plane.

In active state, BS-controlled MS-assisted handovers are performed and various DRX cycles are supported:

The MS makes measurements of attributes of the serving and neighbour cells to enable the process:

- There is no need to indicate neighbouring cell to enable the MS to search and measure a cell i.e. BS relies on the MS to detect the neighbouring cells;
- For the search and measurement of inter-frequency neighbouring cells, at least the carrier frequencies need to be indicated;
- Network signals reporting criteria for event-triggered and periodical reporting;
- An NCL can be provided by the serving cell by radio connection dedicated signaling to handle specific cases for intra- and inter-frequency neighbouring cells. This NCL contains cell specific measurement parameters (e.g. cell specific offset) for specific neighbouring cells;
- Black lists can be provided to prevent the MS from measuring specific neighbouring cells.

Depending on whether the MS needs transmission/reception gaps to perform the relevant measurements, measurements are classified as gap assisted or non-gap assisted. A non-gap assisted measurement is a measurement on a cell that does not require transmission/reception gaps to allow the measurement to be performed. A gap assisted measurement is a measurement on a cell that does require transmission/reception gaps to allow the measurement to be performed. Gap patterns (as opposed to individual gaps) are configured and activated by radio connection.

8.4.2.2 Handover

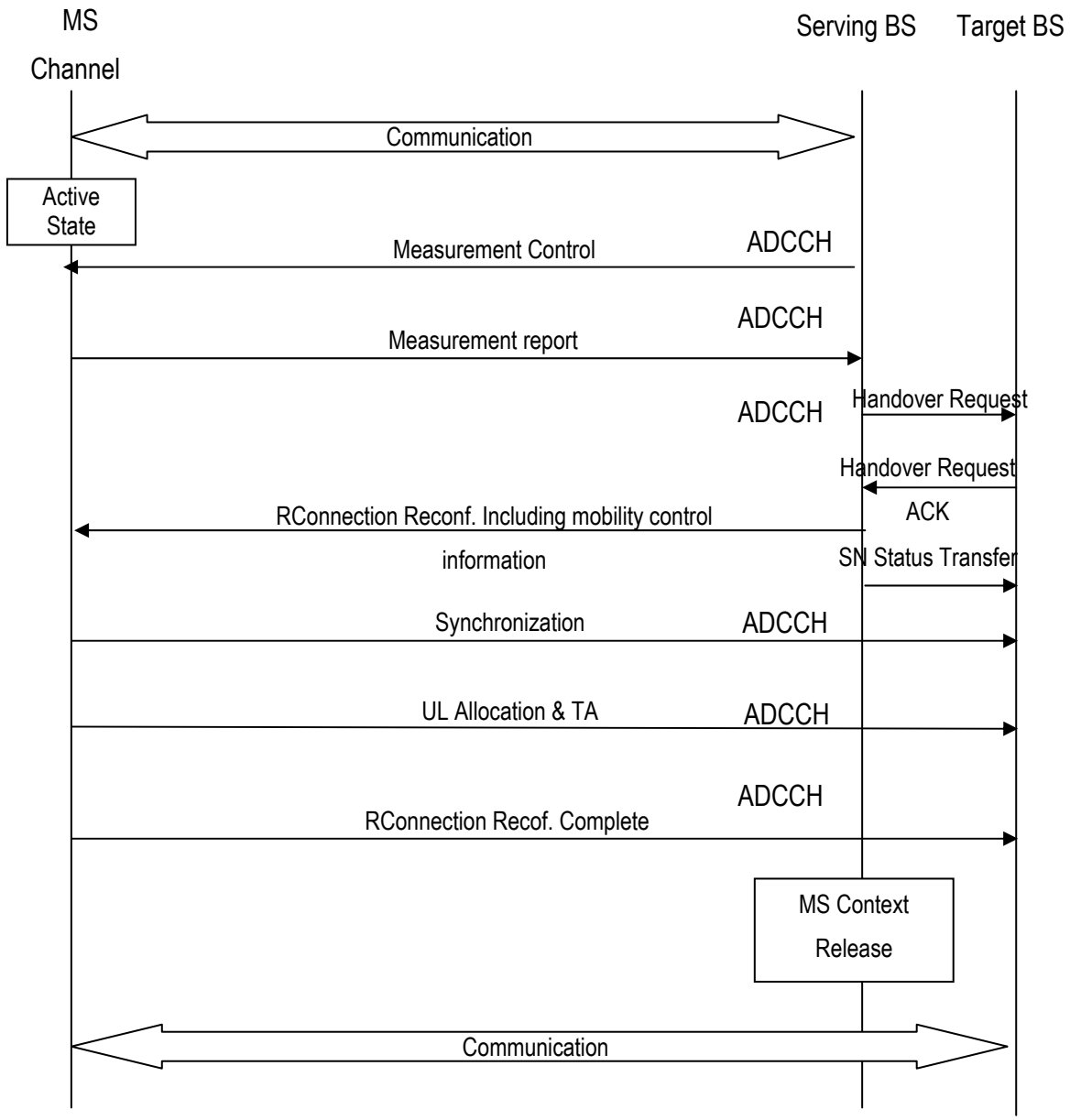

Figure 8.34 BS HO

Below is a more detailed description of the BS HO procedure, as shown in Figure 8.34:

0 The MS context within the source BS contains information regarding roaming restrictions which where provided either at connection establishment or at the last TA update.

1 The source BS configures the MS measurement procedures according to the area restriction information. Measurements provided by the source BS may assist the function controlling the MS's connection mobility.

2 MS is triggered to send MEASUREMENT REPORT by the rules set by i.e. system information, specification etc.

3 Source BS makes decision based on MEASUREMENT REPORT and RRM information to hand off MS.

4 The source BS issues a HANDOVER REQUEST message to the target BS to prepare the HO at the target side.

5 Admission Control may be performed by the target BS dependent on the received E-RAB QoS information to increase the likelihood of a successful HO, if the resources can be granted by target BS.

6 Target BS prepares HO with L1/L2 and sends the HANDOVER REQUEST ACKNOWLEDGE to the source BS.

7 The target BS generates the radio connection message to perform the handover, i.e Radio connectionReconfiguration message including the mobilityControlInformation, to be sent by the source BS towards the MS. The source BS performs the necessary integrity protection and ciphering of the message.

8 The source BS sends the SN STATUS TRANSFER message to the target BS to convey the uplink MSL 3 SN receiver status and the downlink MSL 3 SN transmitter status for which MSL 3 status preservation applies. The uplink MSL 3 SN receiver status includes at least the MSL 3 SN of the first missing UL SDU and may include a bit map of the receive status of the out of sequence UL SDUs that the MS needs to retransmit in the target cell, if there are any such SDUs. The downlink MSL 3 SN transmitter status indicates the next MSL 3 SN that the target BS shall assign to new SDUs, not having a MSL 3 SN yet. The source BS may omit sending this message if none of the E-RABs of the MS shall be treated with MSL 3 status preservation.

9 After receiving the Radio connection Reconfiguration message including the mobilityControlInformation , MS performs synchronisation to target BS and accesses the target cell via ATCCH, following a contention-free procedure if a dedicated ATCCH access sequence was indicated in the mobilityControlInformation, or following a contention-based procedure if no dedicated access sequence was indicated. MS derives target BS specific keys and configures the selected security algorithms to be used in the target cell.

10 The target BS responds with UL allocation and timing advance.

11 When the MS has successfully accessed the target cell, the MS sends the RadioconnectionReconfigurationComplete message (C-MSID) to confirm the handover, along with an uplink Buffer Status Report, whenever possible, to the target BS to indicate that the handover procedure is completed for the MS. The target BS verifies the C-MSID sent in the RadioconnectionReconfigurationComplete message. The target BS can now begin sending data to the MS.

12 Upon reception of the MS CONTEXT RELEASE message, the source BS can release radio and C-plane related resources associated to the MS context. Any ongoing data forwarding may continue.

8.4.3 Measurements

Measurements to be performed by a MS for intra/inter-frequency mobility can be controlled by BS, using broadcast or dedicated control. In IDLE MODE state, a MS shall follow the measurement parameters defined for cell reselection specified by the BS broadcast. The use of dedicated measurement control for IDLE MODE state is possible through the provision of MS specific priorities . In ACTIVE MODE state, a MS shall follow the measurement configurations specified by radio connection signaling directed from the BS.

Intra-frequency neighbour (cell) measurements and inter-frequency neighbour (cell) measurements are defined as follows:

- Intra-frequency neighbour (cell) measurements: Neighbour cell measurements performed by the MS are intra-frequency measurements when the current and target cell operates on the same carrier frequency. The MS shall be able to carry out such measurements without measurement gaps.
- Inter-frequency neighbour (cell) measurements: Neighbour cell measurements performed by the MS are inter-frequency measurements when the neighbour cell operates on a different carrier frequency, compared to the current cell. The MS should not be assumed to be able to carry out such measurements without measurement gaps.
- Whether a measurement is non gap assisted or gap assisted depends on the MS's capability and current operating frequency. The MS determines whether a particular cell measurement needs to be performed in a transmission/reception gap and the scheduler needs to know whether gaps are needed:
- Same carrier frequency and cell bandwidths (Scenario A): an intra-frequency scenario; not measurement gap assisted.
- Same carrier frequency, bandwidth of the target cell smaller than the bandwidth of the current cell (Scenario B): an intra-frequency scenario; not measurement gap assisted.
- Same carrier frequency, bandwidth of the target cell larger than the bandwidth of the current cell (Scenario C): an intra-frequency scenario; not measurement gap assisted.
- Different carrier frequencies, bandwidth of the target cell smaller than the bandwidth of the current cell and bandwidth of the target cell within bandwidth of the current cell (Scenario D): an inter-frequency scenario; measurement gap-assisted scenario.
- Different carrier frequencies, bandwidth of the target cell larger than the bandwidth of the

current cell and bandwidth of the current cell within bandwidth of the target cell (Scenario E): an inter-frequency scenario; measurement gap-assisted scenario.

- Different carrier frequencies and non-overlapping bandwidth, (Scenario F): an inter-frequency scenario; measurement gap-assisted scenario.
- Measurement gaps patterns are configured and activated by Radio connection signaling.

8.4.3.1 Intra-frequency neighbour (cell) measurements

In a system with frequency reuse = 1, mobility within the same frequency layer (i.e. between cells with the same carrier frequency) is predominant. Good neighbour cell measurements are needed for cells that have the same carrier frequency as the serving cell in order to ensure good mobility support and easy network deployment. Search for neighbour cells with the same carrier frequency as the serving cell, and measurements of the relevant quantities for identified cells are needed.

NOTE: To avoid MS activity outside the DRX cycle, the reporting criteria for neighbour cell measurements should match the used DRX cycle.

8.4.3.2 Inter-frequency neighbour (cell) measurements

Regarding mobility between different frequency layers (i.e. between cells with a different carrier frequency), MS may need to perform neighbour cell measurements during DL/UL idle periods that are provided by DRX or packet scheduling.

8.4.3.3 measurement configuration

The measurement configuration includes the following parameters:

1. **Measurement objects:** The objects on which the MS shall perform the measurements.
   - For intra-frequency and inter-frequency measurements a measurement object is a single carrier frequency. Associated with this carrier frequency, BS can configure a list of cell specific offsets and a list of 'blacklisted' cells. Blacklisted cells are not considered in event evaluation or measurement reporting.
2. **Reporting configurations**: A list of reporting configurations where each reporting configuration consists of the following:
   - Reporting criterion: The criterion that triggers the MS to send a measurement report. This can either be periodical or a single event description.

- Reporting format: The quantities that the MS includes in the measurement report and associated information (e.g. number of cells to report).

3. **Measurement identities**: A list of measurement identities where each measurement identity links one measurement object with one reporting configuration. By configuring multiple measurement identities it is possible to link more than one measurement object to the same reporting configuration, as well as to link more than one reporting configuration to the same measurement object. The measurement identity is used as a reference number in the measurement report.

4. **Quantity configurations:** One quantity configuration is configured for intra-frequency measurements, one for inter-frequency measurements and one per RAT type. The quantity configuration defines the measurement quantities and associated filtering used for all event evaluation and related reporting of that measurement type. One filter can be configured per measurement quantity.

5. **Measurement gaps:** Periods that the MS may use to perform measurements, i.e. no (UL, DL) transmissions are scheduled.

8.4.3.4 Measurement reporting

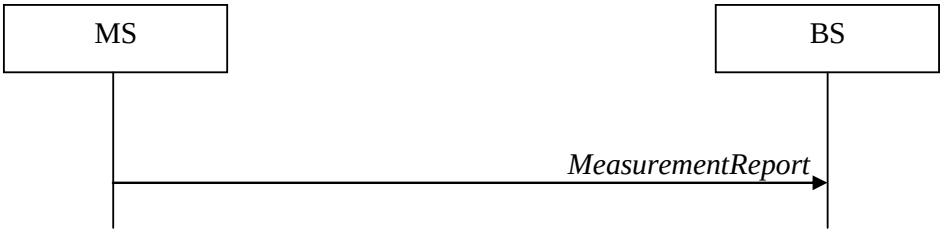

Figure 8.35 Measurement reporting

The purpose of this procedure is to transfer measurement results from the MS to BS , as shown in Figure 8.35.

For the measId for which the measurement reporting procedure was triggered, the MS shall set the measResults within the MeasurementReport message, and submit the MeasurementReport message to lower layers for transmission, upon which the procedure ends.

Chapter 9 Access Phase

9.1 Overview

In this chapter, service channel specification in access phase is described. This is the phase after the establishment of access and the phase for several communication controls and the communication service. Voice and data communication is realized by the service channel on those established radio link channel. Section 9.5 - 9.7 are written for reference, and supplementary information.

9.2 Retransmission Control Method

9.2.1 ARQ

9.2.1.1 Procedure of ARQ

PHY layer recognizes the PHY data unit (CRC section) for every user based on the information on the PRU assigned by MAC layer. ARQ is performed by the PHY data unit. This section describes (selective repeat) SR type ARQ. In SR type ARQ, a resending control part resends the error data in the following procedure: The receiving side will transmit NACK if CRC error is detected after receiving data. The transmitting side recognizes the reason by which the error has occurred and resends the data.

9.2.1.2 Setting the Timing for Transmission of the ACK Field in CDCH

Figure 9.1 shows the send timing of ACK. The ACK field is set at 7.5 ms after CDCH received data.

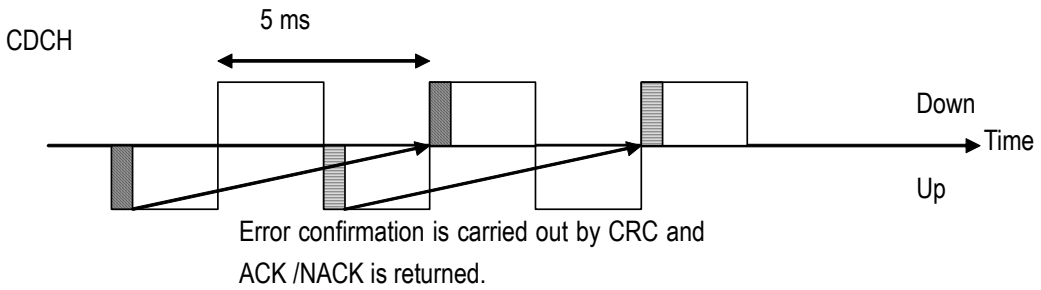

Figure 9.1 ACK Sending Timing

9.2.1.3 Timing of Retransmission

Figure 9.2 shows ARQ re-sending timing when the right of communication is continuously granted to MS. MS will transmit NACK of CDCH after 7.5 ms, if the data error of 2 is detected. BS recognizes an error on receiving NACK and, re-sends 2' to MS on DL CDCH after 7.5 ms.

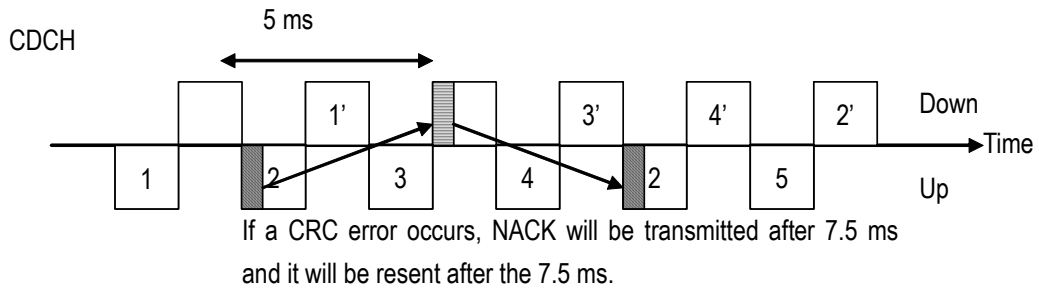

Figure 9.2 ARQ Retransmission Timing

9.2.1.4 Example of ARQ Retransmission

The example of resending an ARQ is introduced in this section.
Figure 9.3 shows the example of resending in case that the same data serve as an error continuously. Data are re-sent to the specified retry count. Moreover, continuous data are transmitted except for resending.
Figure 9.4 shows the example of resending in case that continuous different data serve as an error. Since resending control is carried out by the same time relation, even if data 2 and 3 are continuous data, they are resent independently.

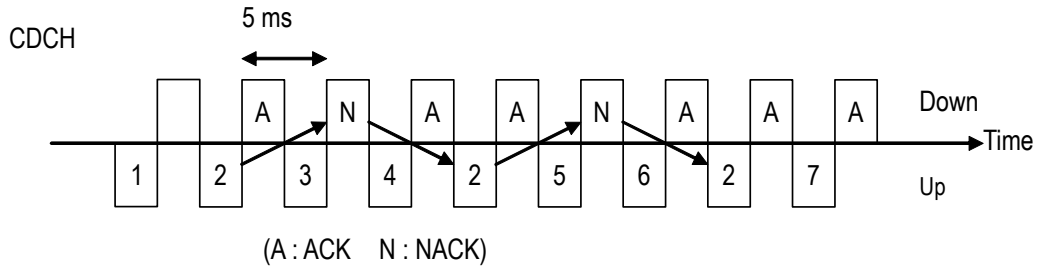

Figure 9.3 Example of ARQ Retransmission 1

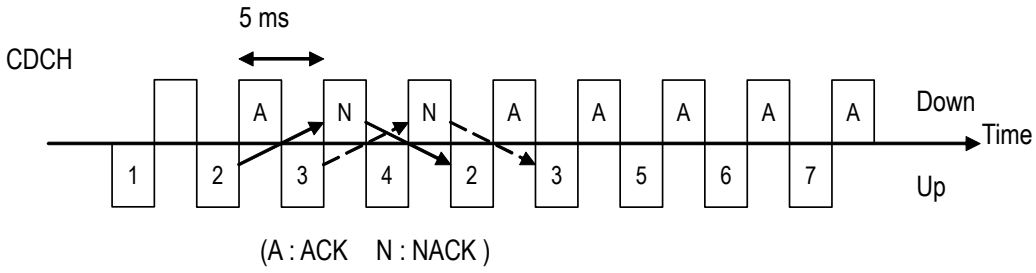

Figure 9.4 Example of ARQ Retransmission 2

9.2.1.5 Example of Sequence

Figure 9.5 shows the example of UL ARQ sequence.

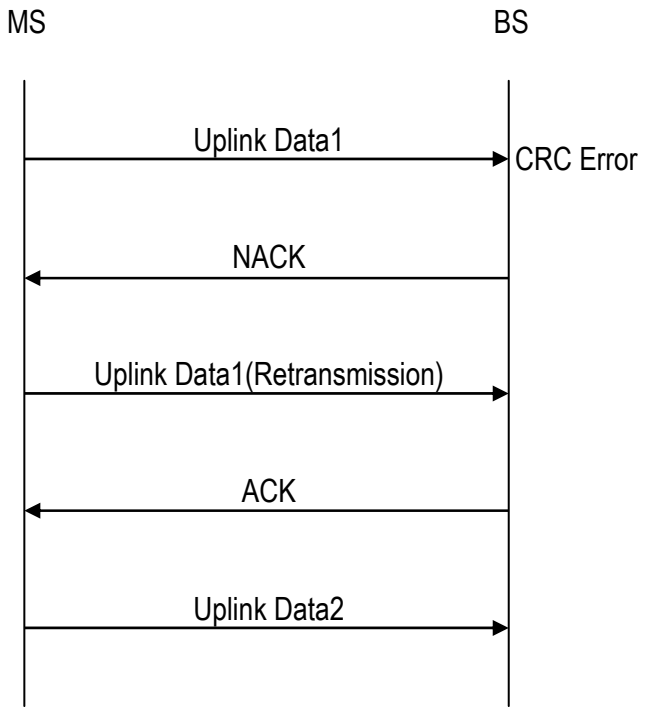

Figure 9.5 Example of UL

9.2.1.6 About the Switch of ARQ and the Adaptive Modulation

This section describes the way to switch ARQ and adaptive modulation. Transmission side changes modulation class when the CRC error exceeds the defined limit of X times. Upper layer decides the limit of X according to QoS etc.

9.2.2 HARQ

9.2.2.1 Procedure of HARQ

PHY Layer receives a set of PHY header and a set of PHY payload units on a TDMA frame, identifies the users for these data units according to the MAP information provided by the MAC and performs HARQ on the received PHY data units. Chase combining is described as follows as one method of HARQ. Figure 9.6 shows the block diagram of the HARQ receiver. HARQ procedure is described as follows:

1. FFT operation is performed on the received base band signal The user signal is detected by FFT operation.
2. De-interleaving operation is performed and buffered on the detected user signal. No maximum ratio combining is done for the first time. De-interleaving operation is only applied after retransmitted data for NACKs is received.
3. The buffer is released if no error is detected. The ACK field is set accordingly on the ANCH channel's PHY Header. The transmission timing of this ANCH is explained in the next chapter.
4. The reception buffer will not be released if an error is detected. The buffered data will be kept in the buffer until the reception of the retransmitted data. [Retransmission timing of the retransmitted data will be explained later.]. The NACK is set for the erroneous data in the ACK field of the PHY header and transmitted on the ANCH channel. The timing of the ANCH channel transmission is the second TDMA frame after the current frame.
5. NACK will be transmitted to the transmitting side if an error is detected. When the retransmitted data is received, the FFT operation is performed on the received signal and then de-Interleaving operation is conducted to the detected user signal. The de-Interleaved data is combined with the buffered data. The Error correction is performed on the combined data and then error detection will be performed. The process from FFT operation to error detection will be done when HARQ condition is satisfied. The condition is described in Section 9.2.2.3.

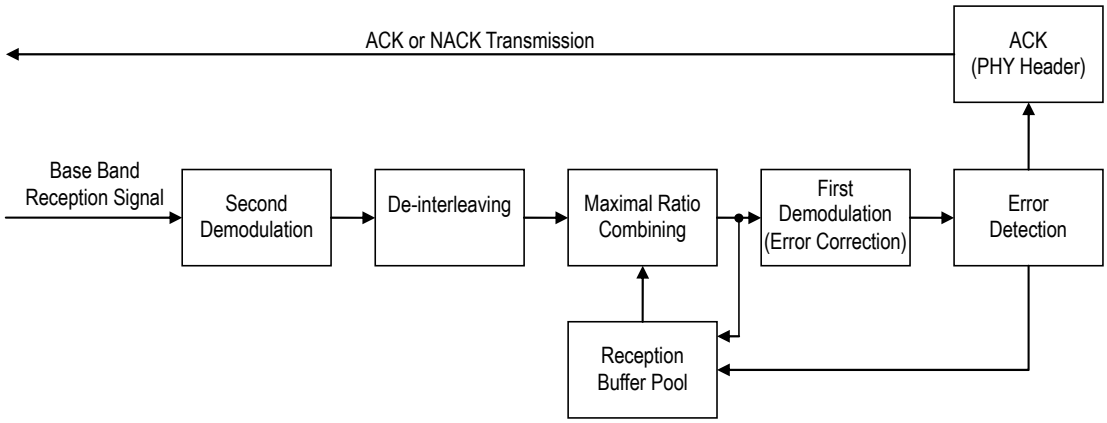

Figure 9.6 Reception of Block Diagram of HARQ

9.2.2.2 Retransmission Rule in FM-Mode

When EXCHs are retransmitted in FM-mode, the retransmission is done with the following rule.

- EXCHs in the same slot as the first transmission are used in HARQ retransmission.
- EXCHs with smaller logical PRU number are firstly used for HARQ retransmission and remaining EXCHs are used for new data transmission.
- The number of EXCH used for retransmission does not change in HARQ retransmission. When the original data size is one/two EXCHs, retransmission data size is also one/two EXCHs, respectively.

Figure 9.7 shows an example of retransmission control. PHY data unit size does not change and the data is transmitted first in a slot in HARQ retransmission. It also shows the relationship between logical PRU assignment and symbol mapping method.

In the first transmission, Data 1 is transmitted by EDCH 1 which combined EXCH 1 and EXCH 2. Data 2 is transmitted by EDCH 2 which combined EXCH 3 and EXCH 4. Data 3 is transmitted by EDCH 3 which combined EXCH 5 and EXCH 6. And Data 4 is transmitted by EDCH 4 which consists of only EXCH 7. Data 2 and Data 4 are retransmitted when an error occurs in communication of EDCH 2 and EDCH 4. By the first and the second rule, Data 2 is retransmitted by EDCH 1 which combined EXCH 1 and EXCH 2. According to the first, the second and the third rule, Data 4 is retransmitted by EDCH 3 which consists of EXCH 5. EXCH 3, EXCH 4, EXCH 6, and EXCH 7 which are not used by retransmission will then combine each other to from EDCH 2 and EDCH 4. Data 5 and Data 6 which are ready for transmission for the first time, will be sent by EDCH 2 and EDCH 4.

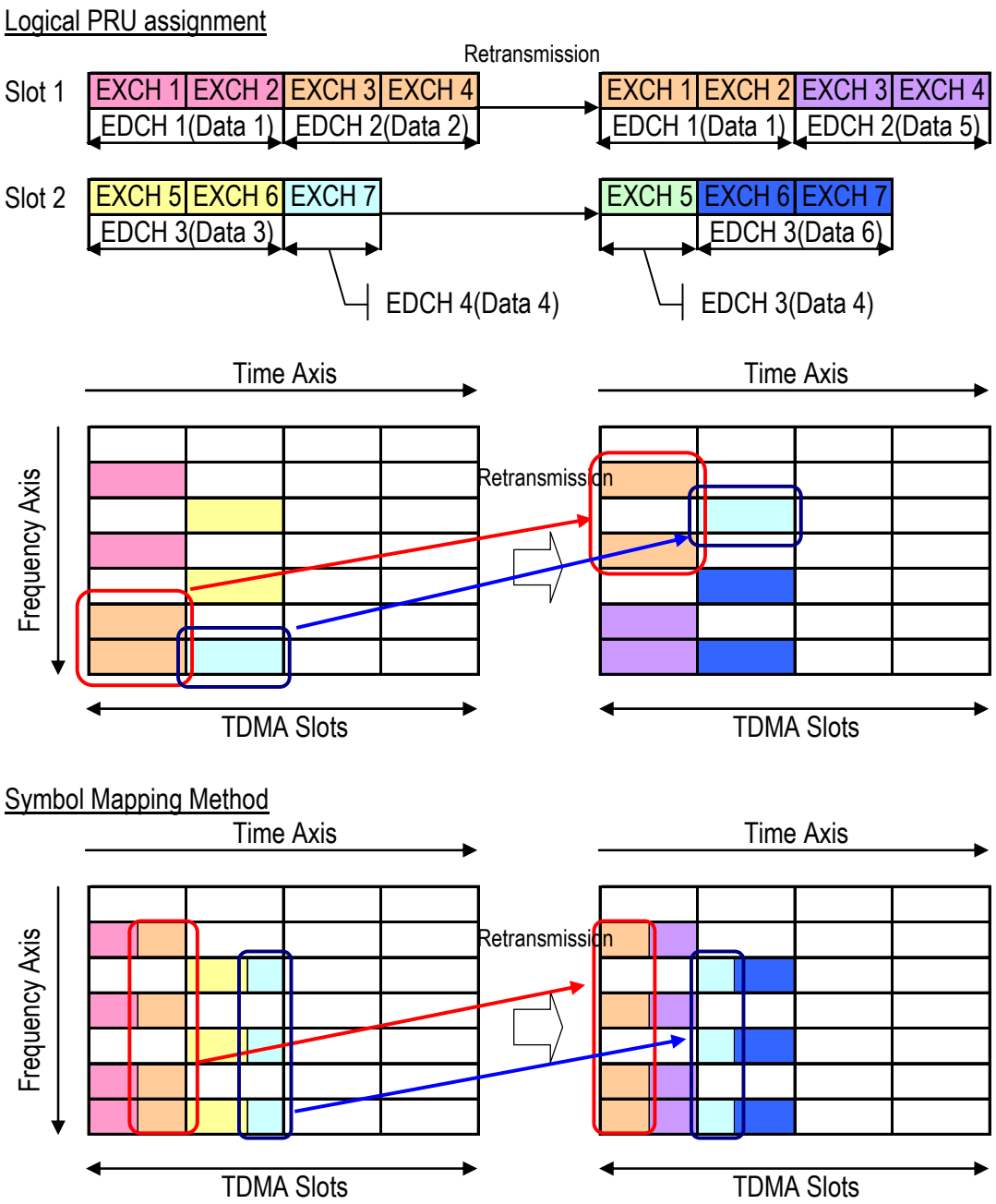

Figure 9.7 Example of Retransmission Control

9.2.2.3 HARQ Approval Condition

It is necessary to assign enough number of PRU to retransmit PHY data unit. The same MCS and slot shall be used for the retransmission of the PHY data unit. If these conditions are not satisfied, HARQ information will be released.

As an example, assume that ANCH, EXCH1, EXCH2, EXCH3 and EXCH4 are allocated for a user. When NACK is received for a particular MAC frame, and two EXCHs are required for retransmission, MAC will then request PHY layer to use the first two EXCHs given by the MAP field for the retransmission.

When the NACK is received for multiple MAC frames simultaneously, the first MAC frame will be allocated to the first few available EXCHs which are indicated by MAP field.

When the NACK is received for multiple MAC frames simultaneously, MAC will then try to allocate EXCHs for the transmission of all the MAC frames. MAC will allocate as many EXCHs as possible for frame transmission in case that sufficient EXCHs are not available.

Remaining MAC frames will be retransmitted by MAC-ARQ in the future.

9.2.2.4 HARQ Cancel Condition

HARQ cancel condition and the process are shown in Table 9.1. These conditions have a priority numbered from 1 to 5. If some conditions occurred at the same time, higher priority condition should be taken into use.

Table 9.1 Summary of HARQ Cancel Condition

No.	Condition	Outline of Process
1	Received ANCH is CRC error or ICCH format.	The HARQ retransmission data in the frame should be cleared, and notify the other side that ANCH is CRC error by HC=1.
2	Received ANCH is set HC=1.	The HARQ retransmission data in the frame should be cleared
3	There is no PRU in the slot which has the HARQ retransmission data.	The HARQ retransmission data in the slot should be cleared.
4	There is the difference of MI between before and after retransmission.	The HARQ retransmission data in the MI applicable to slot should be cleared.
5	There are not enough number of PRU for HARQ retransmission data unit.	The PHY data unit which can not be retransmitted should be cleared.

9.2.2.5 Setting the Timing for the Transmission of the ACK Field in the ANCH

This section will describe the timing setting for the transmission of the ACK field on the ANCH. EXCHs are receiving data during the DL part of the current TDMA frame. After that, the received data will be forwarded to perform various operations like receiving block diagram in Figure 9.6. Therefore, it is impossible to send the ACK for the received data in the UL part of the next TDMA frame. The ACK or NACK for received data will be sent on the UL part of the TDMA frame after the next one.
The example when ANCH is at the first slot is shown in Figure 9.8 and the example when ANCH is at the 4th slot is shown in Figure 9.9.

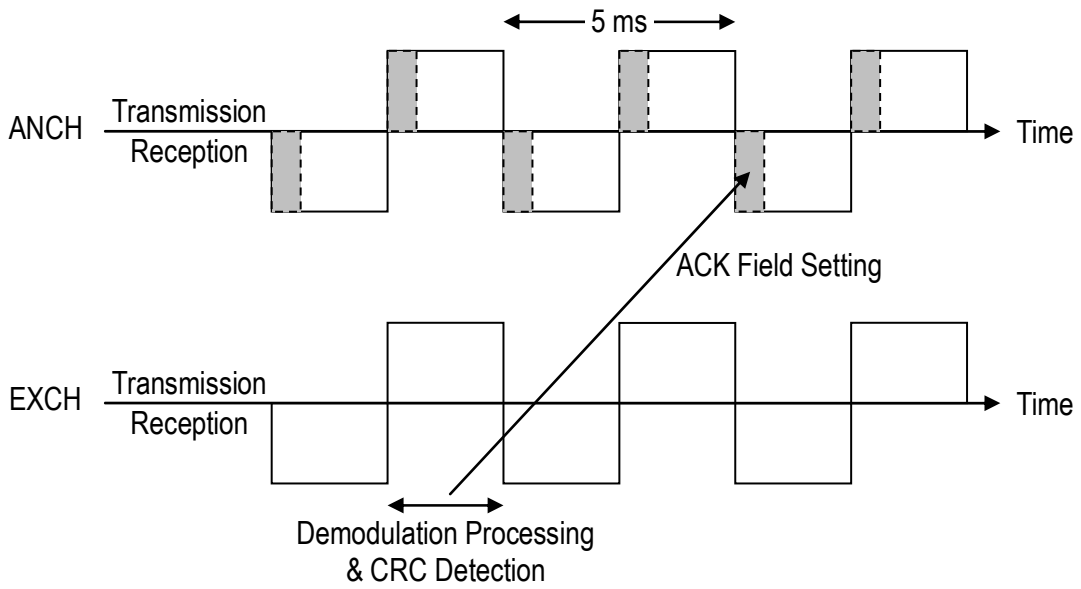

Figure 9.8 ACK Setting Timing When ANCH at the First Slot

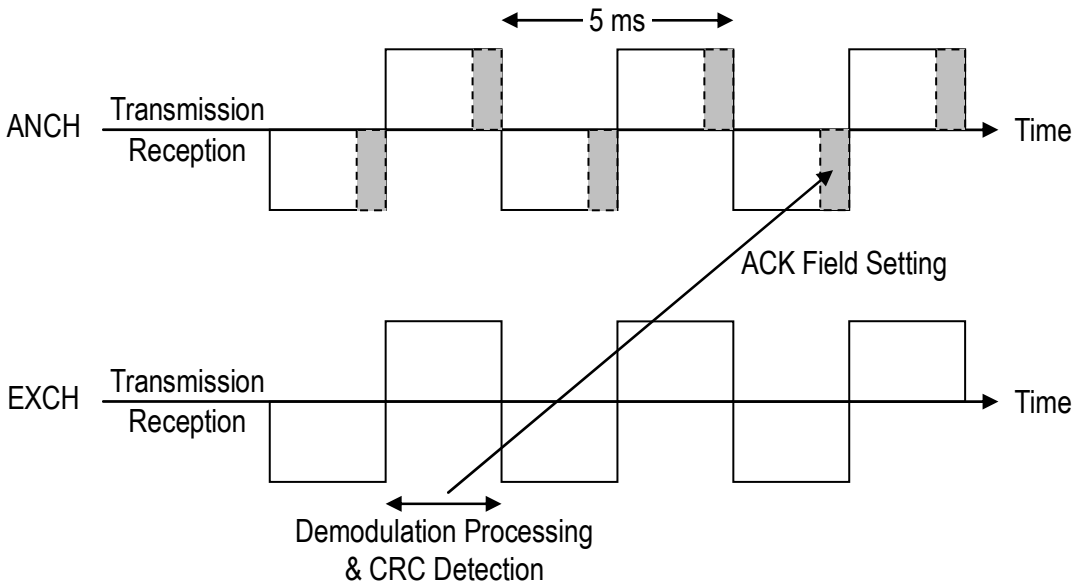

Figure 9.9 ACK Setting Timing When ANCH at the Last Slot

9.2.2.6 Timing of Retransmission

The timing of the retransmission of HARQ is different. It depends on the performance of MS. Therefore, negotiation has to happen between the MS and BS before the connection is established.

9.2.2.6.1 HARQ Retransmission Timing for High Performance MS

Figure 9.10 shows the HARQ timing for the high performance MS. This figure shows the allocation of EXCH on all the TDMA frames for the MS. In this case, the responses can be sent or received in the adjacent TDMA frames. Firstly, MS detect an error on DL Slot 1' (refer to the figure). Next, NACK is sent after 7.5 ms on the ANCH. Then, BS allocates the required EXCHs after receiving the NACK. The EXCHs will be intimated to MS through MAP of ANCH after 7.5 ms from the time of reception of the NACK. In the next TDMA frame, the BS will then retransmit the Data 1' to MS. MS will keep the HARQ information until it receives the MAP information in case that the BS cannot allocate the EXCHs for Data 1' temporarily. MS receives the Data 1' after 5 ms, that is, in the next TDMA frame after receiving the MAP from BS.
Here, HARQ information stands for the ACK/NACK discrimination at the data sending node and the I/Q pattern [Erroneous data set, which will be used at the time of chase combining, is stored in the buffer] when error happens. BS detected error for the UL Data 1 as shown in the diagram. NACK will be sent to MS after 12.5 ms. At the same time, BS will allocate the required EXCHs and informs it to MS through the MAP field of the ANCH in the same DL data TDMA frame. After 2.5 ms, the MS will retransmit the Data 1 according to the MAP field received from BS. In case when BS cannot allocate EXCHs for the MS for retransmission, it will keep HARQ information until the resources are available for allocation. MS will wait till it receives MAP from BS retransmit the Data 1 immediately after 2.5 ms.

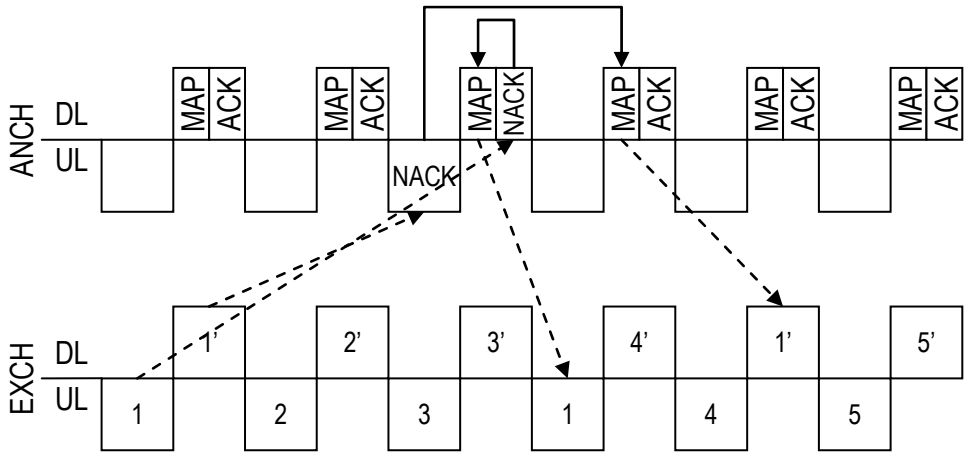

Figure 9.10 HARQ Retransmission Timing with Early Response in case of 5ms frame

9.2.2.6.2 HARQ Retransmission Timing for Low Performance MS

Figure 9.11 shows the HARQ timing for the low performance MS. This figure shows the allocation of EXCH on all the TDMA frames for the MS.
Firstly, MS detected an error on DL Slot 1'. Next, NACK is sent after 7.5 ms on the ANCH. Then, BS allocates the required EXCHs on receiving the NACK. They will be intimated to MS through MAP of ANCH after 7.5 ms from the time of reception of the NACK. The BS will retransmit the Data 1' to MS after 10 ms. MS will keep the HARQ information until it receives the MAP information if the BS cannot allocate the EXCHs for Data 1' temporarily. MS receives the Data 1' after 10 ms that is, in the second TDMA frame, after receiving the MAP from the BS. BS detects error for the UL Data 1 as shown in the diagram. NACK will be sent to MS after 12.5 ms. Meanwhile, BS will allocate the required EXCHs and inform it to MS through the MAP field of the ANCH in the same DL data TDMA frame. After 7.5 ms, the MS will retransmit the Data 1 according to the MAP field received from BS. In case when BS cannot allocate EXCHs for the MS for retransmission, it will keep HARQ information until the resources are available for allocation. MS will wait till it receives MAP from BS to retransmit the Data 1 immediately after 7.5 ms.

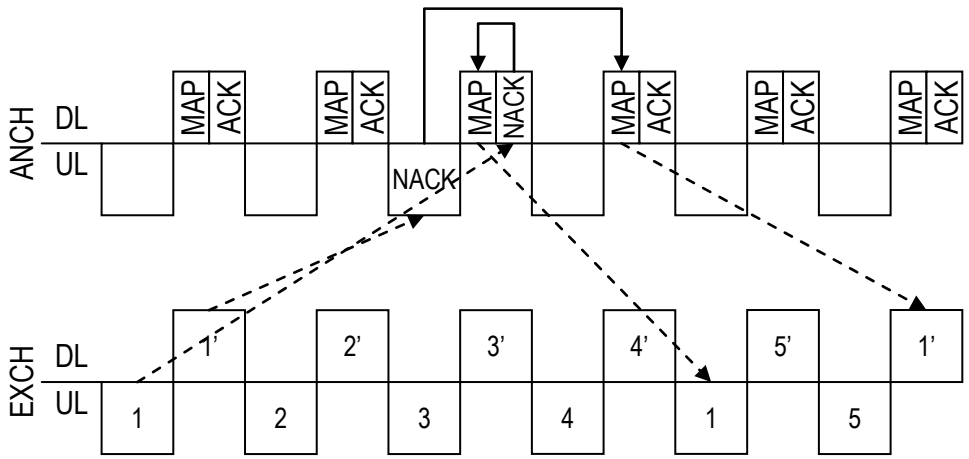

Figure 9.11 HARQ Retransmission Timing with Slow Response in case of 5ms frame

9.2.2.7 Example of HARQ Retransmission

Example of HARQ retransmission is as shown in the below.
In Figure 9.12, the example of retransmitting the Data 1 repeatedly when the error happens continuously is shown. In the Figure 9.12, the upper part shows the detail of ANCH and the lower part shows the detail of EXCH. The retransmission of the Data 1 will be repeated until the retransmission counter [As specified] becomes 0. In between two retransmission periods of Data 1, the EXCHs can be used to transmit other data if the BS allocates EXCHs through the MAP.
In Figure 9.13, the example of retransmitting the Data 1 and Data 2 when error happens to both data is shown. Both Data 1 and Data 2 are subject to the same rule for retransmission. That is, Data 1 is retransmitted after 2.5 ms from the time of receiving the NACK. On the other hand, Data 2 is retransmitted in a similar way but independently.

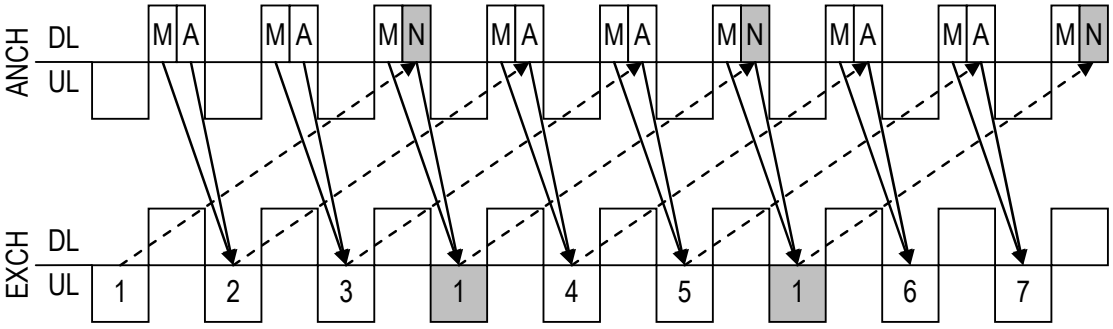

Figure 9.12 Example of HARQ Retransmission 1

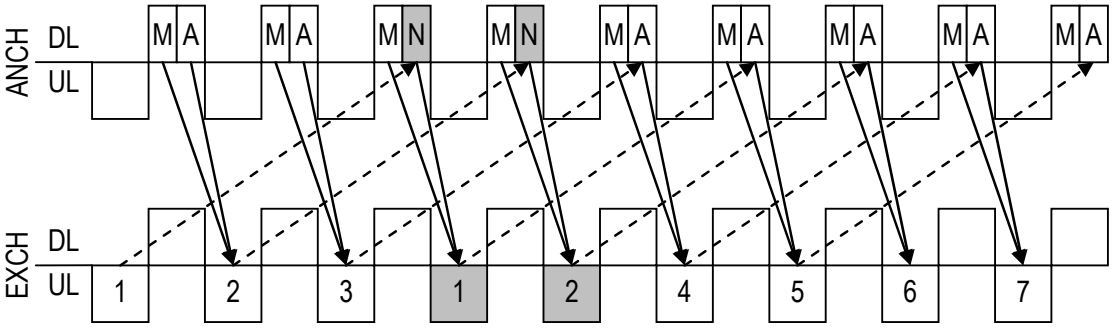

Figure 9.13 Example of HARQ Retransmission 2

9.2.2.8 Example of Sequence

Figure 9.14 and Figure 9.15 show the example of the sequence of UL HARQ.
UL example 1 is an example of normal HARQ sequence when the error occurs.
UL example 2 is a sequence example when the error occurs after MCS is changed at the next transmission timing. In this case, the data 1 is usually demodulated because it does not meet the HARQ approval requirement, and the buffering data for HARQ should be cleared at that timing.

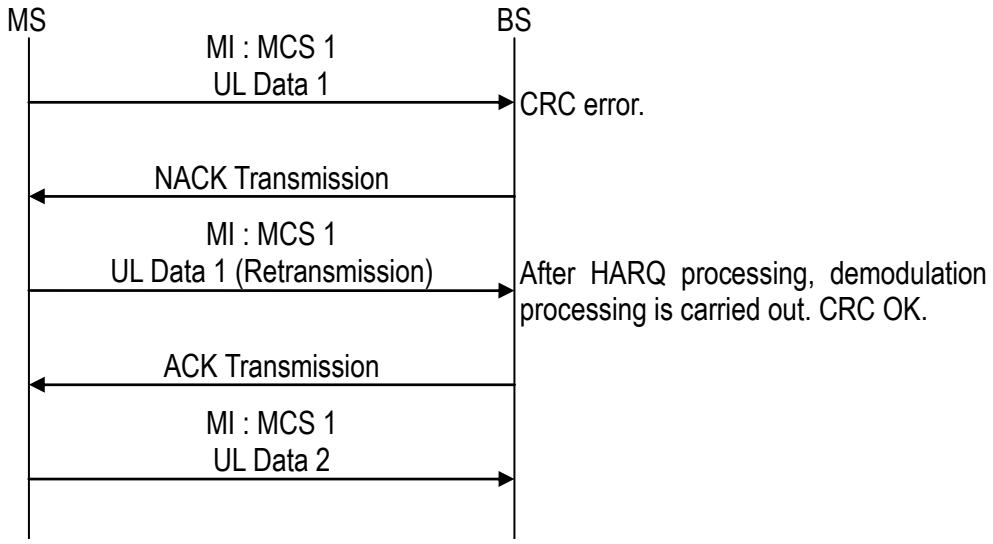

Figure 9.14 Example of UL 1

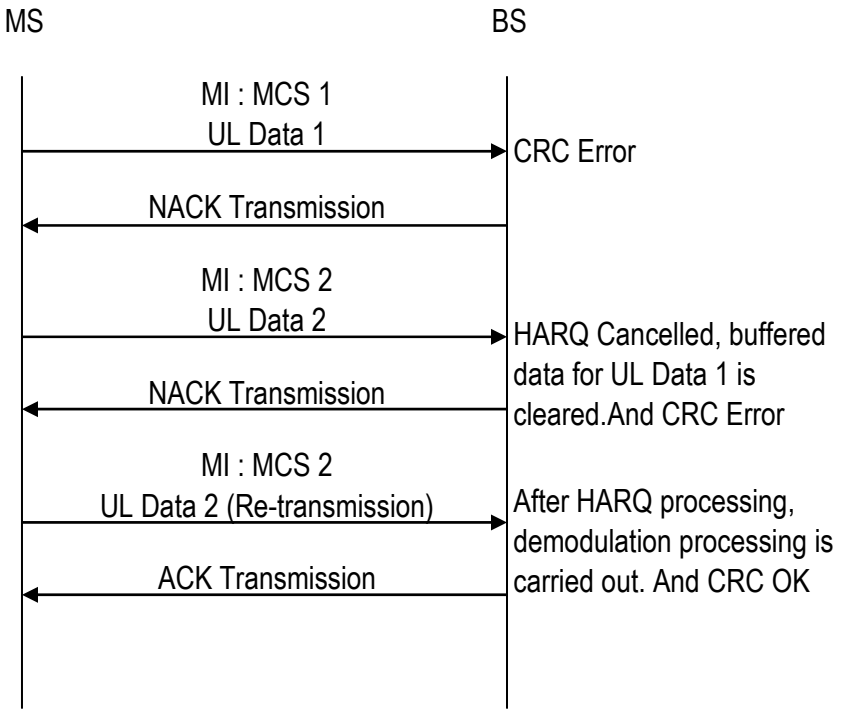

Figure 9.15 Example of UL 2

9.2.2.9 Switch of HARQ and the Adaptive Modulation

This section describes to the way to switch HARQ and adaptive modulation. When the CRC error occurs repeatedly, transmission side changes modulation class and retransmits data by MAC-ARQ.

9.2.2.10 Increment Redundancy (IR) Method

IR-HARQ is used as a HARQ method. Figure 9.16 shows the block diagram of the IR-HARQ receiver. IR-HARQ procedure is as follows:

1. FFT processes the baseband reception signal and the user signal is detected.
2. De-interleaving processes detected user signal and the result data is buffered. The process of maximum ratio combining is not performed for the first time. Depending on the buffer size and the base codeword length, maximum ratio combining is used only when the total received data exceeds IR length (N_{IR}).
3. The buffer is released if no error is detected. The ACK field is set accordingly on the PHY.
4. The reception buffer is not released if an error is detected. The buffered data is kept in the buffer until the retransmitted data is received. [Retransmission timing of the retransmitted data is described later.]. The NACK is set for the erroneous data in the ACK field of the PHY header and transmitted on the ANCH. The timing of the ANCH transmission is the second from the current TDMA frame.
5. The previous sequential signal is transmitted when the transmitter receives NACK. If total transmitted data exceeds N_{IR}, the data transmitted previously is retransmitted.
6. When the retransmitted data is received, FFT processed the received signal and de-interleaving processes the detected user signal. The de-interleaved data is concatenated to the buffered data if total transmitted data is less than or equal to N_{IR}. If total transmitted data exceeds N_{IR}, the de-interleaved data is combined with the buffered data as CC. Figure 9.17 shows the example of IR-HARQ retransmission procedure. The error correction processes the combined data first and error detection is performed afterwards.

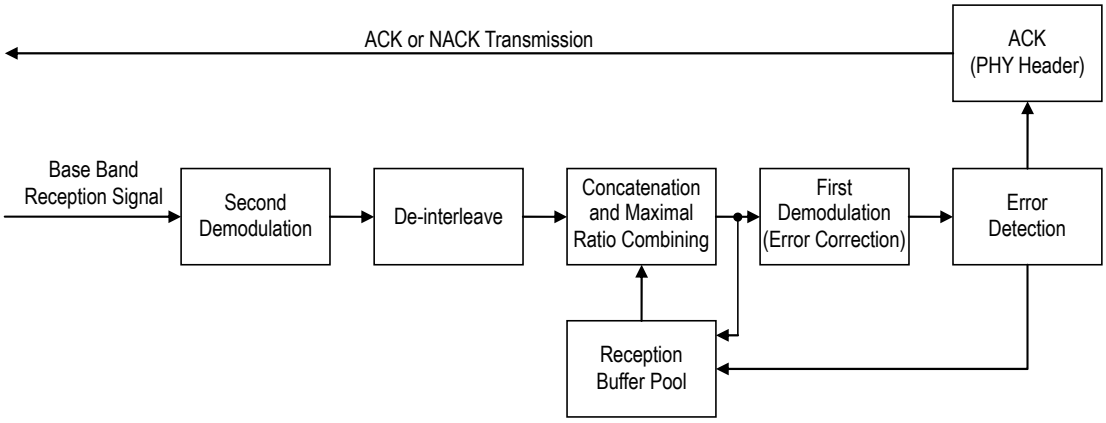

Figure 9.16 Reception Block Diagram of IR-HARQ

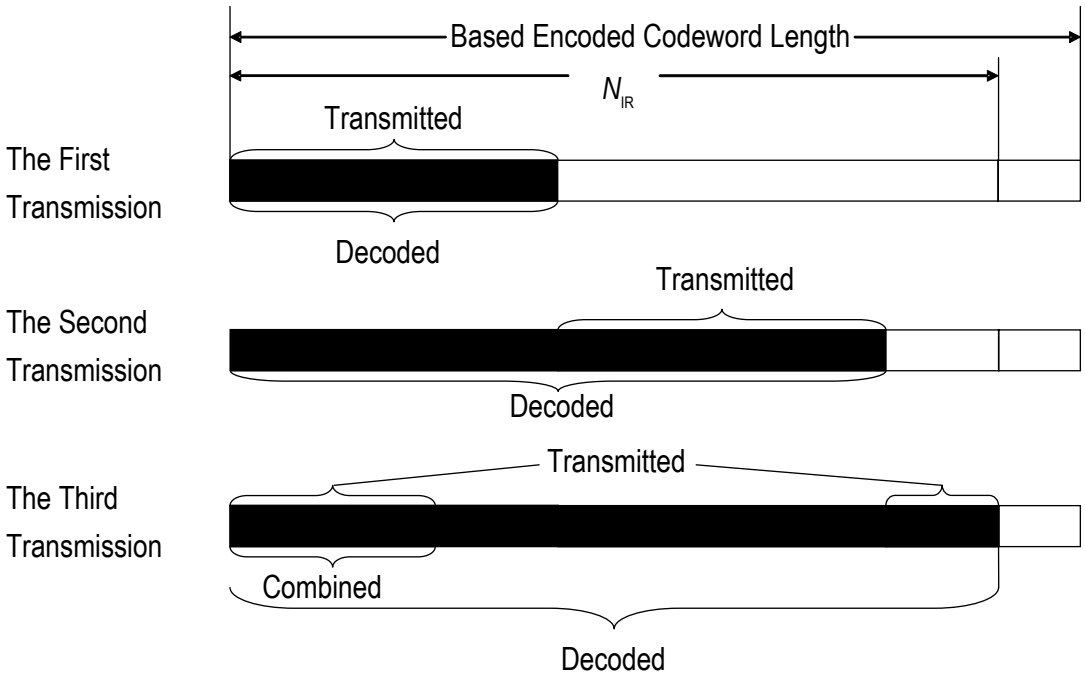

Figure 9.17 IR-HARQ Retransmission Procedure

9.2.2.11 Retransmission Count

HARQ retransmission time is separately specified. When the condition of HARQ retransmission is satisfied, the number of HARQ retransmission is counted.

9.3 Optional Retransmission Control Method

9.3.1 HARQ

The HARQ within the MSL1 sublayer has the following characteristics:

- N-process Stop-And-Wait;
- HARQ transmits and retransmits transport blocks;
- In the downlink:
  - Asynchronous adaptive HARQ;
  - Uplink ACK/NAKs in response to downlink (re)transmissions are sent on AUANCH or AUEDCH;

  - ADECCH signals the HARQ process number and if it is a transmission or retransmission;
  - Retransmissions are always scheduled through ADECCH.
- In the uplink:
  - Synchronous HARQ;
  - Maximum number of retransmissions configured per MS (as opposed to per radio bearer);
  - Downlink ACK/NAKs in response to uplink (re)transmissions are sent on ADHICH;
  - HARQ operation in uplink is governed by the following principles (summarized in Table 9.1-1):
    1) Regardless of the content of the HARQ feedback (ACK or NACK), when a ADECCH for the MS is correctly received, the MS follows what the ADECCH asks the MS to do i.e. perform a transmission or a retransmission (referred to as adaptive retransmission);
    2) When no ADECCH addressed to the C-MSID of the MS is detected, the HARQ feedback dictates how the MS performs retransmissions:
    - NACK: the MS performs a non-adaptive retransmission i.e. a retransmission on the same uplink resource as previously used by the same process;
    - ACK: the MS does not perform any UL (re)transmission and keeps the data in the HARQ buffer. A ADECCH is then required to perform a retransmission i.e. a non-adaptive retransmission cannot follow.
- Measurement gaps are of higher priority than HARQ retransmissions: whenever an HARQ retransmission collides with a measurement gap, the HARQ retransmission does not take place.

Table 9.2: UL HARQ Operation

HARQ feedback seen by the MS	ADECCH seen by the MS	MS behaviour
ACK or NACK	New Transmission	New transmission according to ADECCH
ACK or NACK	Retransmission	Retransmission according to ADECCH (adaptive retransmission)
ACK	None	No (re)transmission, keep data in HARQ buffer and a ADECCH is required to resume retransmissions
NACK	None	Non-adaptive retransmission

9.3.2 ARQ

The ARQ within the MSL2 has the following characteristics:

- ARQ retransmits MSL2 PDUs or MSL2 PDU segments based on MSL2 status reports;
- Polling for MSL2 status report is used when needed by MSL2;
- MSL2 receiver can also trigger MSL2 status report after detecting a missing MSL2 PDU or MSL2 PDU segment.

9.3.2.1 ARQ Retransmission procedure

The transmitting side of an AM MSL2 entity can receive a negative acknowledgement (notification of reception failure by its peer AM MSL2 entity) for an AMD PDU or a portion of an AMD PDU by the following:

- STATUS PDU from its peer AM MSL2 entity.

When receiving a negative acknowledgement for an AMD PDU or a portion of an AMD PDU by a STATUS PDU from its peer AM MSL2 entity, the transmitting side of the AM MSL2 entity shall:

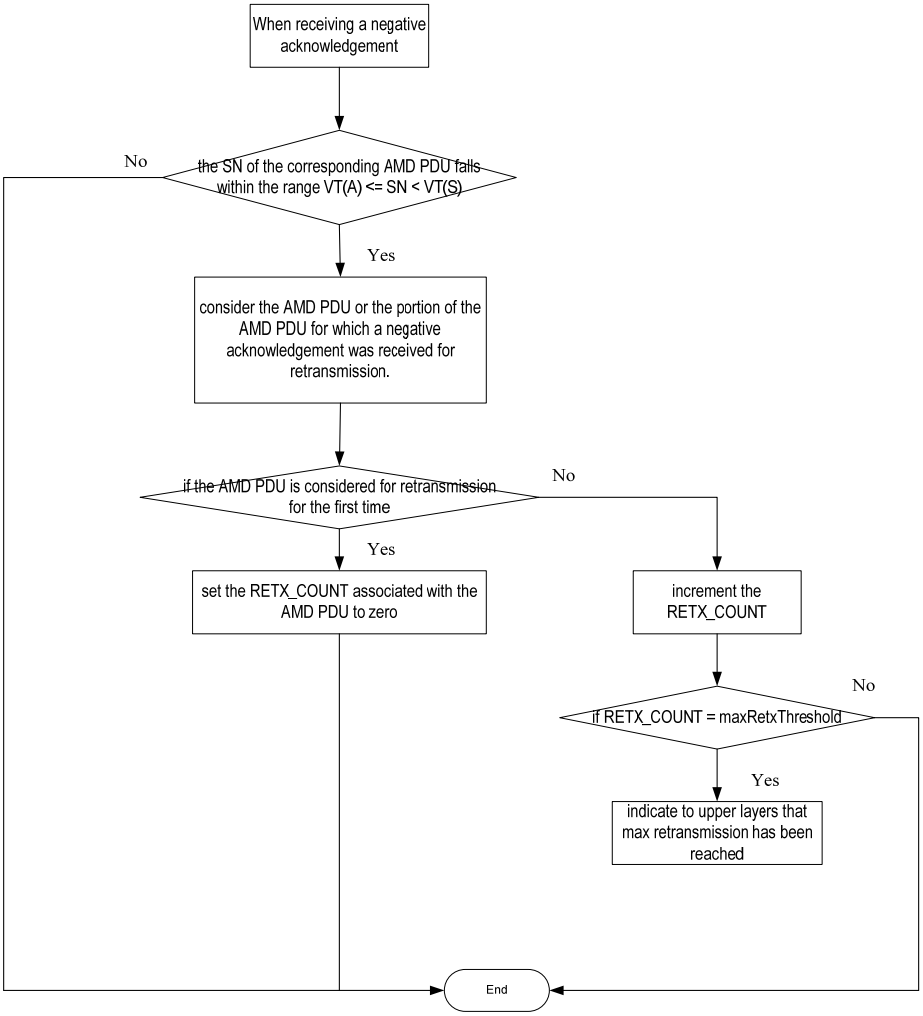

Figure 9.18 STATUS PDU

When retransmitting an AMD PDU, the transmitting side of an AM MSL2 entity shall:

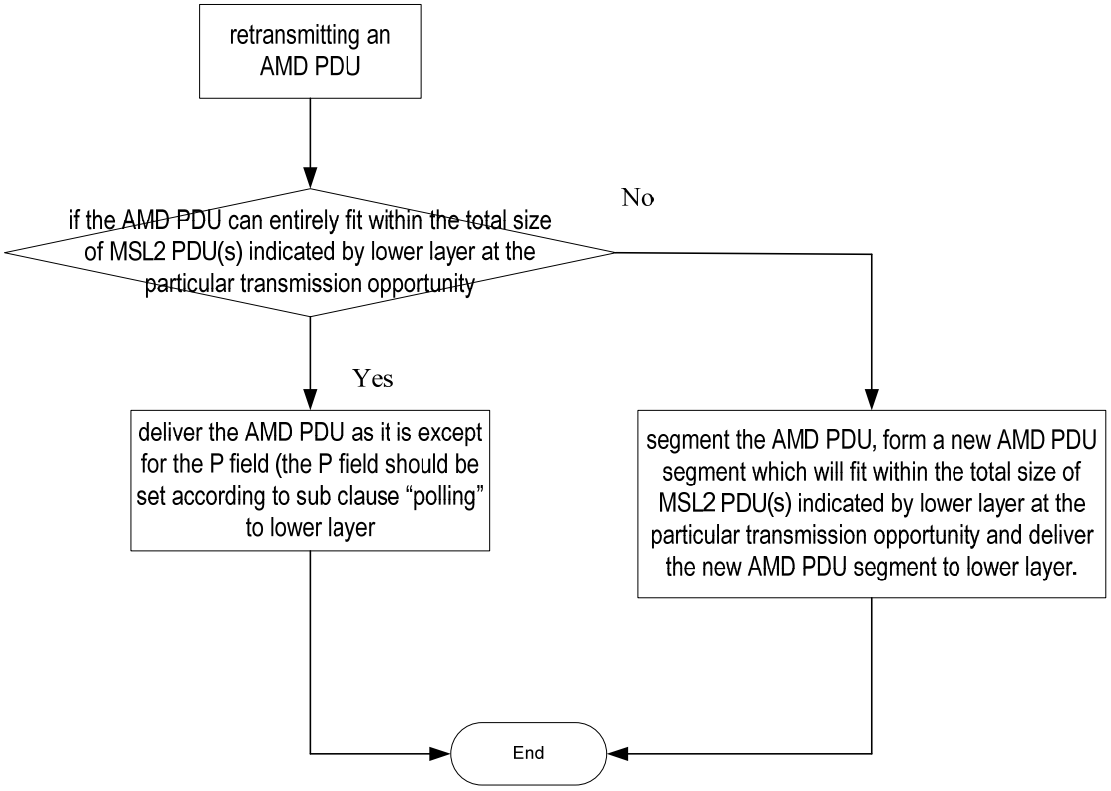

Figure 9.19: STATUS PDU

When retransmitting a portion of an AMD PDU, the transmitting side of an AM MSL2 entity shall:

- segment the portion of the AMD PDU as necessary, form a new AMD PDU segment which will fit within the total size of MSL2 PDU(s) indicated by lower layer at the particular transmission opportunity and deliver the new AMD PDU segment to lower layer.

When forming a new AMD PDU segment, the transmitting side of an AM MSL2 entity shall:

- only map the Data field of the original AMD PDU to the Data field of the new AMD PDU segment;
- set the header of the new AMD PDU segment
- set the P field according to sub clause "polling"

9.3.2.2 Polling

Upon assembly of a new AMD PDU, the transmitting side of an AM MSL2 entity shall use the polling in the below cases:

- PDU_WITHOUT_POLL >= pollPDU
- BYTE_WITHOUT_POLL >= pollByte
- If both the transmission buffer and the retransmission buffer becomes empty (excluding transmitted MSL2 data PDU awaiting for acknowledgements) after the transmission of the MSL2 data PDU
- If no new MSL2 data PDU can be transmitted after the transmission of the MSL2 data PDU (e.g. due to window stalling)

To include a poll in a MSL2 data PDU, the transmitting side of an AM MSL2 entity shall:

- set the P field of the MSL2 data PDU to "1";
- set PDU_WITHOUT_POLL to 0;
- set BYTE_WITHOUT_POLL to 0;

After delivering a MSL2 data PDU including a poll to lower layer and after incrementing of VT(S) if necessary, the transmitting side of an AM MSL2 entity shall:

- set POLL_SN to VT(S) – 1 ;
- start t-PollRetransmit or restart t-PollRetransmit

9.3.2.3 Status report

An AM MSL2 entity sends STATUS PDUs to its peer AM MSL2 entity in order to provide positive and/or negative acknowledgements of MSL2 PDUs (or portions of them).
High layer configures whether or not the status prohibit function is to be used for an AM MSL2 entity.
Triggers to initiate STATUS reporting include:

- Polling from its peer AM MSL2 entity:
- Detection of reception failure of an MSL2 data PDU:

STATUS PDU consists of a STATUS PDU payload and a MSL2 control PDU header.
MSL2 control PDU header consists of a D/C and a CPT field.
The STATUS PDU payload starts from the first bit following the MSL2 control PDU header, and it consists of one ACK_SN and one E1, zero or more sets of a NACK_SN, an E1 and an E2, and possibly a set of a SOstart and a SOend for each NACK_SN. When necessary one to seven padding bits are included in the end of the STATUS PDU to achieve octet alignment.

D/C	CPT		ACK_SN					Oct 1
ACK_SN						E1		Oct 2
NACK_SN								Oct 3
	E1	E2	NACK_SN					Oct 4
NACK_SN					E1	E2		Oct 5
SOstart								Oct 6
SOstart						SOend		Oct 7
SOend								Oct 8
SOend					NACK_SN			Oct 9
...								

Figure 9.20: STATUS PDU

9.4 QCS and Connection

Figure 9.21 shows the relation between connection and QCS. The connection is related to unit radio resource. The radio resource is composed of CSCH or the pair of ANCH and EXCH. One connection accommodates one or more QCS. QoS is controlled for each QCS. One MS can have two or more connections. Detail of QoS is described in the following section. The connection is identified by connection-ID. The QCS is identified by QCS-ID.

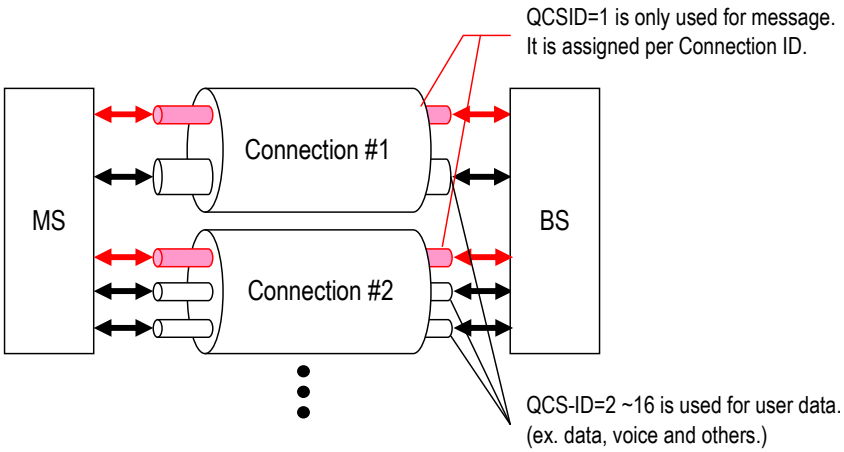

Figure 9.21 Connection and QCS

The relation between connection and QCS is shown in Figure 9.21

The value 1 of QCS-ID is used to transmit the connection and QCS control information. The value 2 to 16 of QCS-ID is used to transmit the upper layer data. The MAC control protocol is applied with all QCS-ID.
This QCS-ID assignment is applied per connection.

9.4.1 Service Class

XGP system defines the service class as shown in Table 9.3. The service class is not defined in an individual packet but in the individual flow. The negotiation of the service class is performed according to the message when the connection is established.
These service class have a relation to QoS number. Refer to 7.3.3.17 for detail.

Table 9.3 Service Class

Service class name	Explanation
Private Line Class (PLC)	Dedicated line service is provided. A wireless bandwidth more than constancy is always secured to apply to the service with a random generation of the packet. It is guaranteed that the packet reaches the accepting station at the service rate within the decided time.
no Packet loss and Variable Rate Class (nl -VRC)	The situation in lack of the packet is not permitted and the prohibition is applied to real-time service. In order to correspond to the change in burst volume of information, it is possible to make wireless bandwidth change according to the data amount. This class guarantees the maximum delay value.
allowable Packet loss and Variable Rate Class (al-VRC)	The situation in lack of the packet is permitted, and the permission is applied to real-time service. It is possible to make wireless bandwidth change according to the data amount to correspond to the change in burst volume of information. This class guarantees the maximum delay value.
Low - Delay Best Effort Class (Ld-BE)	This class is applied to non-real-time service. It is possible to make wireless bandwidth change according to the data amount. Time delay is shorter than LAC, and the packet loss is not allowed.
Leave Alone Class (LAC)	It is applied to non-real-time service. Best effort service that does not guarantee wireless bandwidth and does not allow packet loss is supported. The maximum possible bandwidth is allocated.
Voice Class	Dedicated line service is provided. A wireless

Service class name	Explanation
(Voice)	bandwidth more than constancy is always secured to apply to the service with a random generation. The quality of bandwidth and delay time is guaranteed by TCH which is defined for voice only channel.

9.4.2 QoS Parameter

Table 9.4 shows the parameter guaranteed in each QoS service class.

Table 9.4 Service Class and Quality Parameter

	QoS parameter			Traffic parameter		
	Forwarding delay	Jitter	FER	Guarantee bandwidth	Average Bit Rate	Traffic Priority
PLC	Yes	-	Yes	Yes	Yes	Yes
nl-VRC, al-VRC	-	Yes	Yes	Yes	Yes	Yes
LD-BE	-	-	No	No	Yes	Yes
LAC	-	-	No	No	No	Yes
Voice	Yes	-	Yes	Yes	Yes	Yes

Yes : Possible to specify it.
No : Impossible to specify it.
- : Irrelevance

9.4.2.1 Forwarding Delay

The forwarding delay provided by this parameter is guaranteed in PLC of real-time service.

9.4.2.2 Jitter

It refers to difference between the maximum delay value and the minimum delay value, as ell as the maximum jitter values.

9.4.2.3 Frame Error Rate (FER)

In real-time service, it provides the FER that service allows according to this parameter.

9.4.2.4 Guarantee Bandwidth

The system guarantees the bandwidth provided by this parameter.
It aims to transmit data without causing the delay when data transmission is needed by securing a necessary bandwidth without fail.

9.4.2.5 Average Bit Rate

It is a bit number of the data transmitted to a wireless section near the unit time. It provides for the bit number of the data taken out of the made queue of each user (mean value). In Private Line Class, the average bit rate becomes the same as the guaranteed maximum bit rate because the data volume is constant.
A wireless bandwidth is prevented from being occupied when data is generated in the burst as service provide output bit rate with high priority.

9.4.2.6 Traffic Priority

This parameter is used when data in the same QoS class is given priority for process. For instance, when data requested for re-sending is made prior to usual data, the traffic priority is specified high.

9.5 Access Phase Control

9.5.1 Power Control

PC field of DL and UL PHY frame header is used for the power control. MS is able to control the UL transmission power according to the PC field data from BS (Refer to Sections 4.4.6.3 and 4.4.6.4). This power control method is mandatory, because it must be implemented for OFDMA.
BS is also able to control DL transmission power according to the PC field data from MS (Refer to Section 4.4.6.4). This power control method is optional as it is only used to decrease the interference between cells.
Figure 9.22 shows the power control diagram.

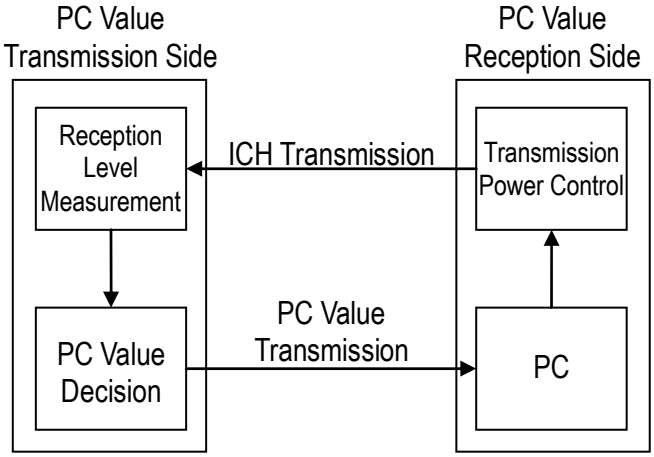

Figure 9.22 Power Control Block Diagram

The PC field transmission side sets the value to PC based on reception level of pilot symbol (Refer to Figure 9.23). This standard does not specify the timing relation between reception level and PC value.

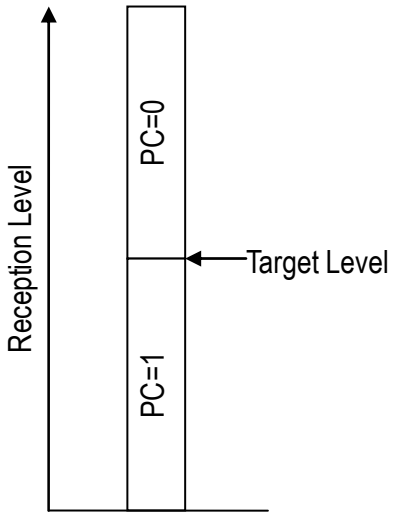

Figure 9.23 Reception Level and PC Value

The relation between the reception level and value of PC is shown below.

- Reception level > Target level
  PC=0
- Reception level <= Target level
  PC=1

9.5.2 Timing Control

SD field of DL PHY frame is used for the timing control. According to the SD field data from BS, MS is able to control the UL transmission timing (Refer to Section 4.4.6.2).
Figure 9.24 shows the timing control diagram. BS aligns symbol timing between MS and MS by using SD field. BS decides SD value based on reception symbol timing. MS changes transmission timing according to SD.

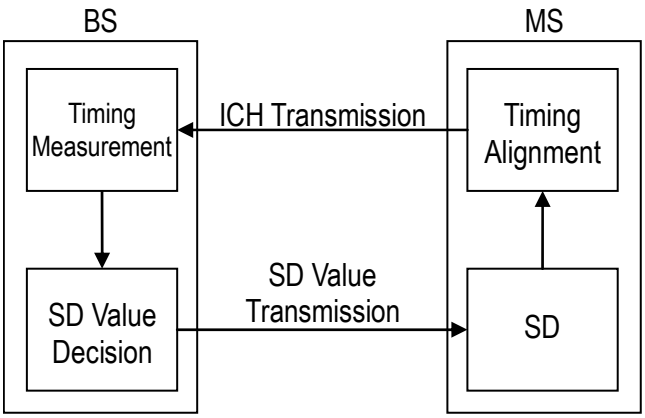

Figure 9.24 UL Timing Control Block Diagram

Figure 9.25 shows the time relationship of the reception burst and the target burst.

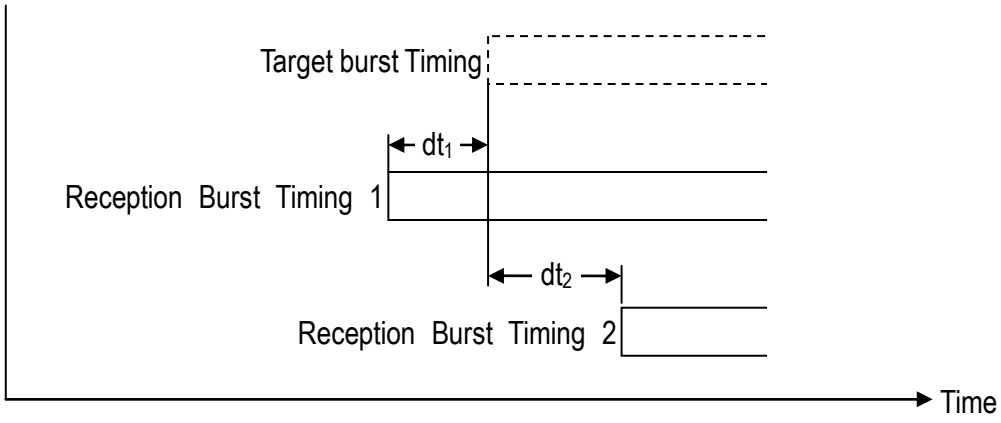

Figure 9.25 Time Difference Between Target Timing and Reception Timing

BS decides SD value as shown in Figure 9.26 when dt is defined as the difference between reception burst timing and target burst timing.

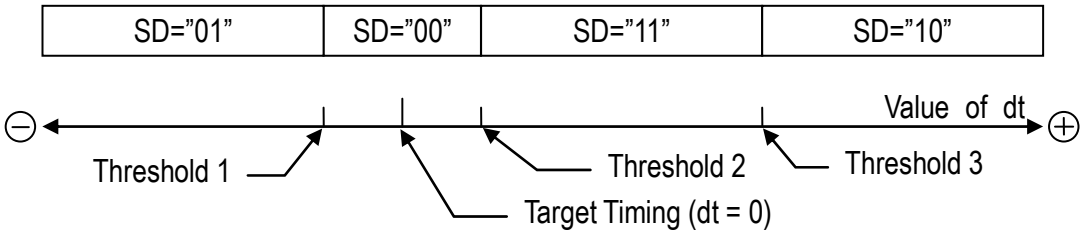

Figure 9.26 dt and SD Value

9.5.3 Link Adaptation Control

9.5.3.1 MCS Switching

9.5.3.1.1 Decision of Transmission MCS

The MCS for the data transmission in the later TDMA frame will be decided based on the MR in the received PHY header. When the MS requests one of the MCS values by using MR, the BS may use any of the MCS values that is available including those below the requested MCS value. Then the decided MCS for the DL data transmission in that TDMA frame will be set in MI field of the DL PHY header. Figure 9.27 shows the example of selecting MCS for transmission by using received MR on the PHY header.

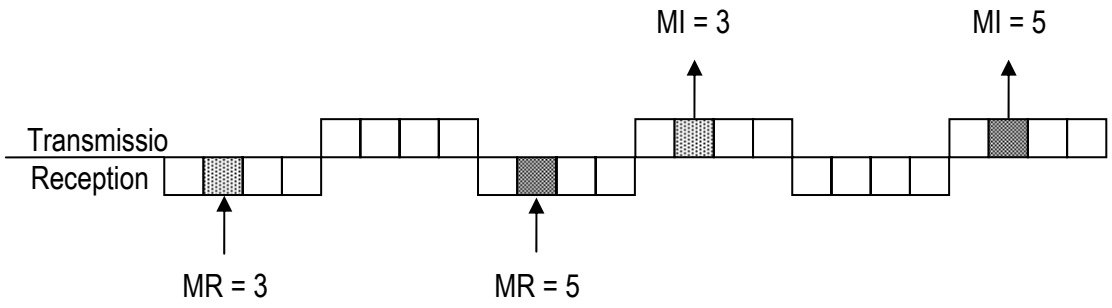

Figure 9.27 Example of MI Transmission When Switch Time Is 7.5 ms

9.5.3.1.2 Decision of The Reception of Demodulation MCS

According to the received MI, demodulation will be done in the received data of the adaptive modulation area.

9.5.3.1.3 Setup of Modulation Method in MR Field for Transmission

The average SINR for all the symbols received for the user is calculated during this process. The calculating of smoothing etc. might be applied to SINR. The modulation method to be set in the MR field will be decided from this SINR value for the time being. Figure 9.28 shows the way to set MR field based on the SINR value for the time being.

a) When the SINR value for the time being is less than A1, BPSK (R=1/2, Efficiency=0.5) modulation method is selected for setting MR field.
b) When the SINR value for the time being is between A1 to A2, QPSK (R=1/2, Efficiency=1) modulation method is selected for setting MR field.
c) When the SINR value for the time being is between A2 to A3, QPSK (R=3/4, Efficiency=1.5) modulation method is selected for setting MR field.

d) When the SINR value for the time being is between A3 to A4, 16QAM (R= 1/2, Efficiency=2) modulation method is selected for setting MR field.
e) When the SINR value for the time being is between A4 to A5, 16QAM (R=3/4, Efficiency=3) modulation method is selected for setting MR field.
f) When the SINR value for the time being is between A5 to A6, 64QAM (R=4/6, Efficiency=4) modulation method is selected for setting MR field.
g) When the SINR value for the time being is between A6 to A7, 64QAM (R=5/6, Efficiency=5) modulation method is selected for setting MR field.
h) When the SINR value for the time being is between A7 to A8, 256QAM (R=6/8, Efficiency=6) modulation method is selected for setting MR field.
i) When the SINR value for the time being is above A8, 256QAM (R=7/8, Efficiency=7) modulation method is selected for setting MR field.

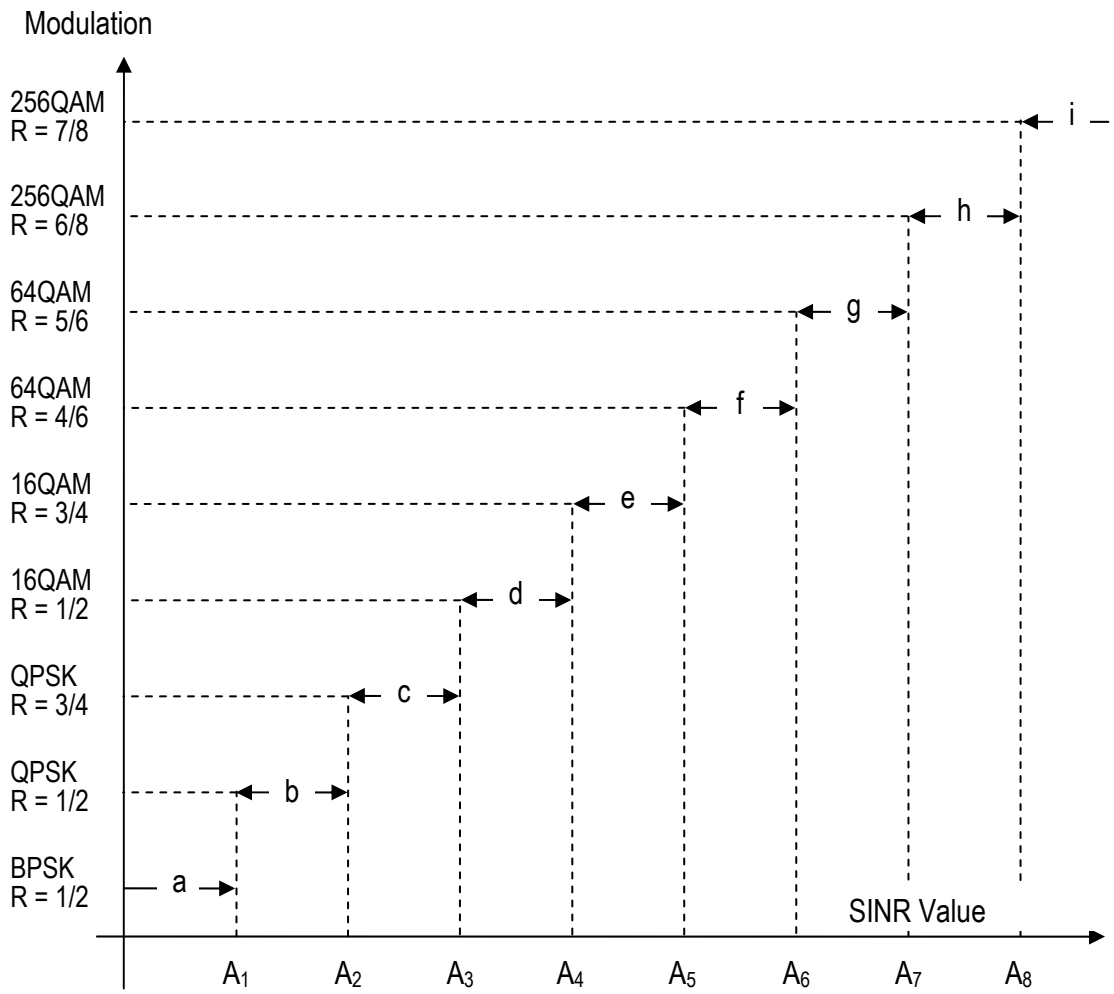

Figure 9.28 Method of Modulation Method Selection According to SINR Value

9.5.4 ANCH/CSCH Scheduling Control

Figure 9.29 shows numbering rule regarding ANCH/CSCH active frame. Both MS and BS use specified frames. It is called ANCH/CSCH active frame. Scheduling term is repeated during DL LCCH transmission period.

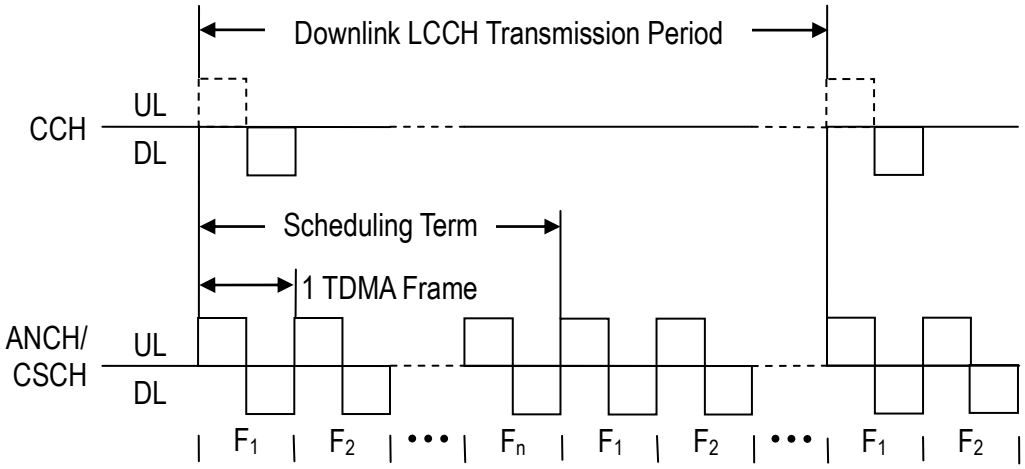

Figure 9.29 ANCH/CSCH Active Frame Number

ANCH/CSCH active frame is changed by “ANCH/CSCH switching indication” message from BS in active state. Figure 9.30 and Figure 9.31 shows the change sequence of ANCH/CSCH active frame.

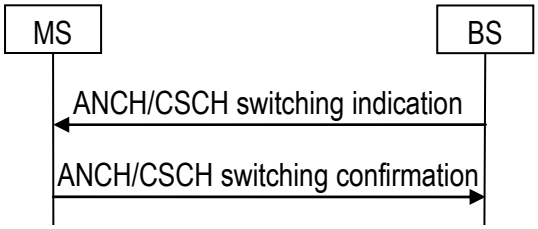

Figure 9.30 BS Origin ANCH/CSCH Scheduling Change

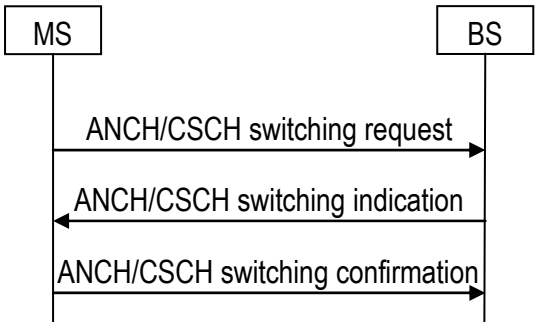

Figure 9.31 MS Origin ANCH/CSCH Scheduling Change

MS changes ANCH/CSCH active frame when MS receives ANCH/CSCH switching indication message. ANCH/CSCH switching indication message contains the following information.

- destination logical PRU number.
  which is the same as the source PRU or is a different PRU
- ANCH/CSCH scheduling term
- ANCH/CSCH frame specification

MS sends ANCH/CSCH switching confirmation message after MS changes ANCH/CSCH active frame.

When MS receives indication message which has unsupported value of scheduling term, period and scheduling itself, MS can request another scheduling term, period or reject the scheduling. The rejection of scheduling can be used only when there is the necessity for the guaranteed bandwidth such as voice data.

9.5.5 Interference Avoidance Control

9.5.5.1 ANCH/CSCH Disconnect Detection

At the BS or MS, if the ANCH/CSCH reception is impossible for N successive times, the ANCH/CSCH will be released as the reception side regards the ANCH/CSCH to be disconnected. Figure 9.32 shows a sequence when ANCH/CSCH disconnection is detected at the BS side. If the N successive ANCH/CSCH disconnection does not happen, the BS will regard ANCH/CSCH to be connected. The ANCH will be released if the ANCH/CSCH is failed for the connection for N times continuously. It means transmission and reception on the ANCH/CSCH is ceased. Disconnection is detected in the same procedure at the MS. Both BS and MS regard it as an idle state after ANCH/CSCH is released.

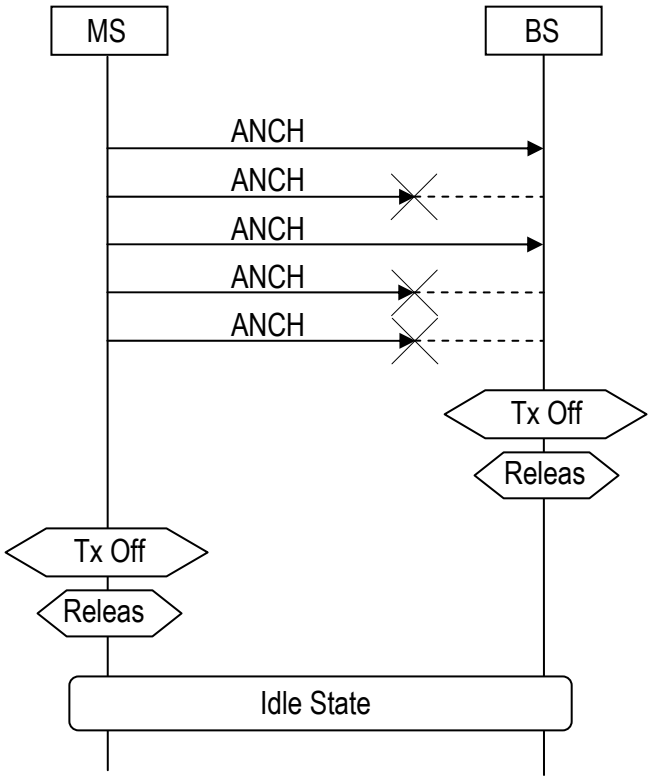

Figure 9.32 Detection of ANCH/CSCH Disconnection

9.5.5.2 ANCH/CSCH Switching

MS supervises the average SINR on the DL ANCH while BS supervises the average SINR on the UL ANCH. When the radio condition deteriorates, ANCH/CSCH will be changed to another PRU. Average SINR is calculated according to the average SINR calculation time for ANCH/CSCH. The measurement result older than the average SINR calculation time for the ANCH/CSCH is not included in the calculation average SINR.

9.5.5.2.1 MS Origin ANCH/CSCH Switching

When average SINR becomes lower than ANCH/CSCH switching DL SINR threshold, MS transmits ANCH/CSCH switching request message to BS. As soon as BS received the message, it selects the PRU from an unused PRU with CS concerned according to the channel selection algorithm. After the destination PRU was selected, BS notifies the destination PRU number by sending ANCH/CSCH switching indication message to MS. MS disconnects original PRU when it receives ANCH/CSCH switching indication message. Then DL carrier sensing for the PRU to be switched is carried out. The transmission and reception of ANCH/CSCH start if the carrier sensing result is less than DL RSSI threshold for ANCH selection (DL RSSI threshold for CSCH selection). BS judges the ANCH/CSCH switching to be success when it manages to receive UL ANCH/CSCH. BS then disconnects original ANCH/CSCH.
Figure 9.33 shows MS origin ANCH/CSCH switching sequence. The wide arrow shown in the figure describes radio management message, and the small arrow shows radio transmission and reception.

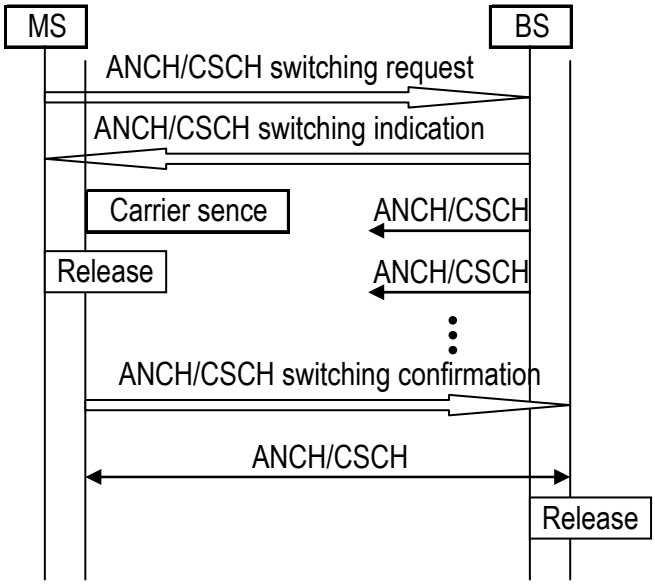

Figure 9.33 MS Origin ANCH/CSCH Switching

9.5.5.2.2 BS Origin ANCH/CSCH Switching

BS selects the destination PRU from an unused PRU with BS concerned according to the channel selection algorithm when average SINR is lower than ANCH/CSCH switching UL SINR threshold. BS then transmits radio management message "ANCH/CSCH switching indication" that contains the destination PRU number to MS. The same process will be carried out after that as MS trigged ANCH/CSCH switching.
Figure 9.34 shows BS originated ANCH/CSCH switching sequence. The wide arrow shown in the figure describes radio management message, and the small arrow shows radio transmission and reception.

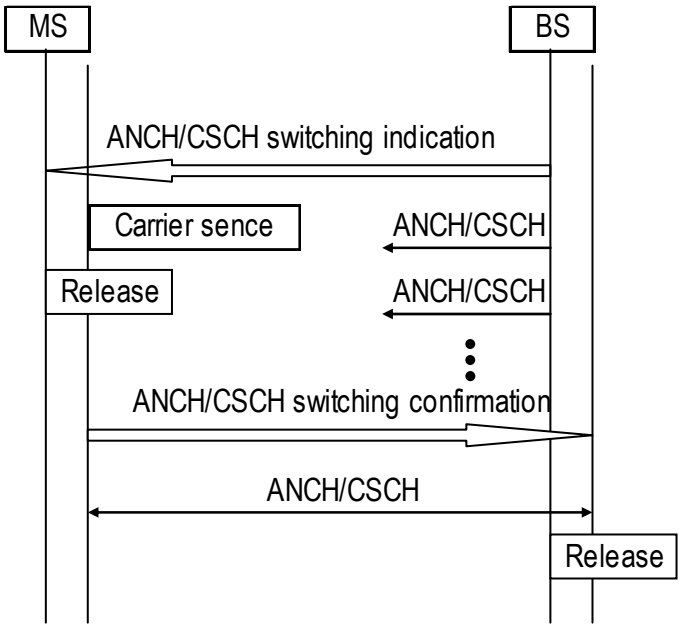

Figure 9.34 BS Origin ANCH/CSCH Switching

9.5.5.2.3 Retransmission of ANCH/CSCH Switching Indication

UL transmission for original ANCH/CSCH is only able to be detected until retransmission timer expiration when BS transmits ANCH/CSCH switching indication message, BS then judges that ANCH/CSCH switching indication message did not reach MS and it retransmits ANCH/CSCH switching indication message.

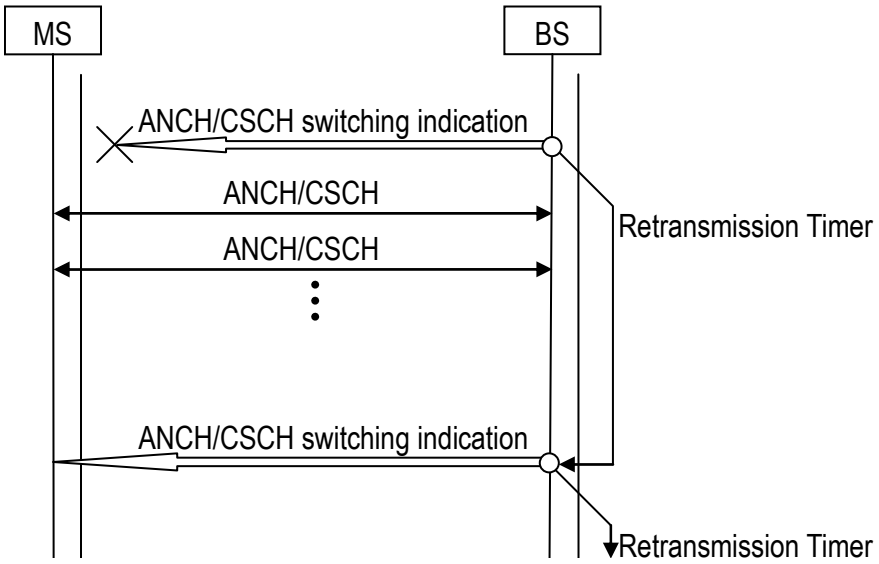

Figure 9.35 Retransmission of ANCH Switch Indication

When retrying count for ANCH/CSCH retransmission indication is over, ANCH/CSCH switching operation is finished and the original communication is continued.

9.5.5.2.4 Switchback Operation

BS continues original ANCH/CSCH transmission and reception after the transmission of ANCH/CSCH switching indication message transmission because MS carries out switch back processing in case ANCH/CSCH switching fails. When the following conditions are satisfied at MS side, the switchback operation is carried out.

- When the DL carrier sensing result at the destination PRU exceeds the DL RSSI threshold for ANCH selection (DL RSSI threshold for CSCH selection).
- When DL ANCH/CSCH is not detected at destination PRU.

Figure 9.36 shows the switch back operation. The figure describes a sequence when carrier sensing at MS side for a BS-informed PRU is OK BS tries to transmit ANCH/CSCH at destination PRU, but it cannot receive DL ANCH/CSCH, therefore switchback operation is started.

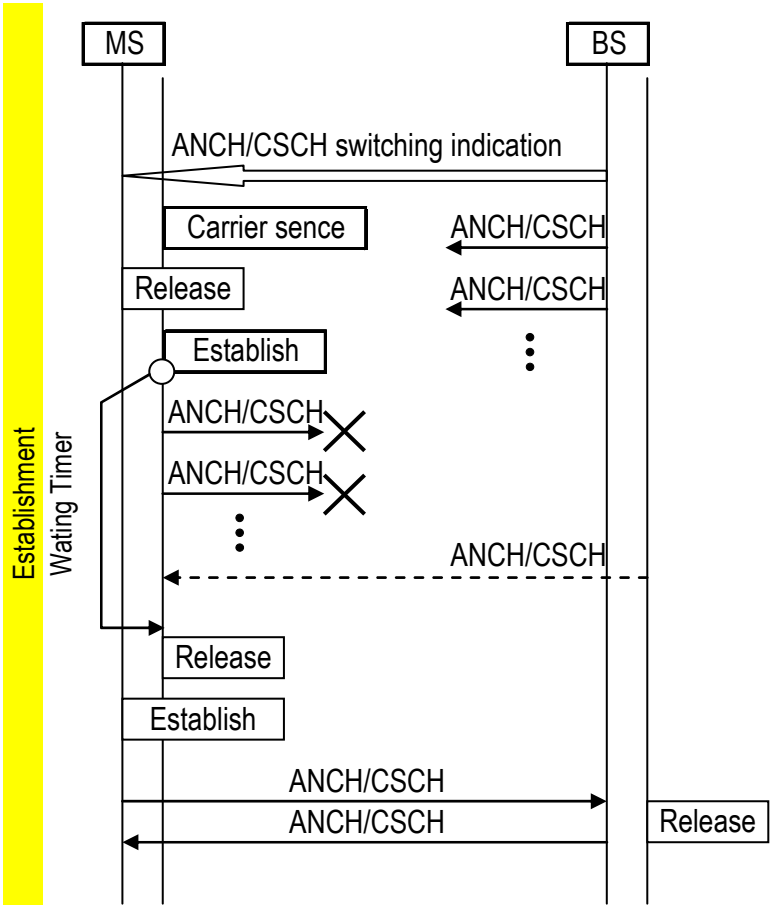

Figure 9.36 ANCH/CSCH Switchback

In the figure MS does carrier sensing at destination PRU and the result is OK. ANCH/CSCH is then established at destination PRU. Switchback operation will be started if DL ANCH/CSCH is not received at destination PRU. MS releases the destination PRU and establishes ANCH/CSCH at original PRU. BS will know that the switch of ANCH/CSCH fails if it receives UL ANCH/CSCH at original PRU. In this case, BS continues ANCH transmission and reception at original PRU.

9.5.6 Handover Control

There are two kinds of handover procedure definition for XGP.
One is normal handover, of which the processing is started after all the radio connections with BS are disconnected.
The other is seamless handover, of which the processing is started with no need to disconnect the BS in connection. Seamless handover can be carried out with less overhead.

- When MS is handed over to BS, connection establishment procedure is conducted in the same way. MS transmits LCH assignment request message to BS-B which is selected by MS according to each procedure. After MS receives LCH assignment message from BS-B, MS carries out transmission by changing radio state from idle to active and connecting ANCH/CSCH. After connection is established to BS-B, resource release operation is carried out from network side of BS-A.
  BS-A : The BS from which the MS is handed over.
  BS-B : The BS to which the MS is being handed over.

9.5.6.1 Normal Handover

MS starts connection establishment processing after stopping CCH capture and ICH transmission/reception. The conditions to start normal handover are describes as follows.

- When DL ANCH/CSCH disconnection is detected at less RSSI value for DL ANCH/CSCH than the threshold of handover processing level.
- When the RSSI value of UL ANCH/CSCH is less than threshold of handover processing level.
- When BS cannot assign PRU to be switched although ANCH/CSCH switching condition is satisfied.

“ANCH/CSCH switching indication” message is transmitted from BS to MS in case when BS starts normal handover. MS starts normal handover when it receives the message. Once of MS starts normal handover, it will not transmit any signal to BS to inform the start of handover processing.
MS starts the search for destination BS after transmission stops. The result of the search for destination BS is arranged in order of RSSI value from the highest one on. When the handover process starts, destination BS is chosen from the list which is created as a result of the search for destination BS. The BS which has indicated the highest RSSI value should be given the highest priority over all others for destination BS choice.

9.5.6.2 Seamless Handover

MS searches for destination BS while maintaining the connection to the original BS. Destination BS is chosen from information based on search result. The conditions to start seamless handover are as follows:

- when SINR of DL ANCH/CSCH becomes less than seamless handover SINR threshold.
- when SINR of UL ANCH/CSCH becomes less than seamless handover processing SINR.

When the condition to start MS originated seamless handover is satisfied, LCH assignment request message will be transmitted from the MS to destination BS if MS has available destination BS list.
If MS does not have available destination BS list, MS transmits ANCH/CSCH switching request [No destination BS list] message to the original BS to search for destination BS. When BS receives ANCH/CSCH switching request [No destination BS list], it allocates all EXCHs to the MS. If there is no EXCH allocation for the MS, the MS starts destination BS search processing at all TDMA slots except for the TDMA slot which ANCH/CSCH is allocated. In this case, The BS searching process is carried out to all relative slots except for the TDMA slot to which ANCH/CSCH is allocated. After the searching process for destination BS is completed, LCH assignment request message is transmitted to the destination BS.
When MS receives LCH assignment reject message from destination BS, MS re-select destination BS from its own destination BS list, then seamless handover process is carried out again.
When MS receives LCH assignment message from destination BS, ANCH/CSCH transmission and reception starts at destination BS without disconnecting radio link. When radio resource allocation is received from destination BS through MAP in DL ANCH/CSCH, radio link between original BS is disconnected.

9.6 MAC Layer Control

9.6.1 Window Control

In XGP, window control is carried out. Delivery confirmation is done by the RR message. Window position is updated according to the sequence number contained in the RR message. Data transmission stops when the transmission data reaches the window size. Figure 9.37 shows the example of the window size equal to 4. In the figure, the arrow stands for the available area to transmit the data. The number in the figure is the sequence number. The circle that is shown in the left side of the figure shows the case that a RR message is received when the sequence number N contained in the RR message is 2. In this case, the data in the window can be transmitted when N is a number between 2 and 5. The circle shown in the right side of the figure shows the case that a RR message is received with N as 4. In this case, the data in the window can be transmitted when N is a number between 4 and 7.

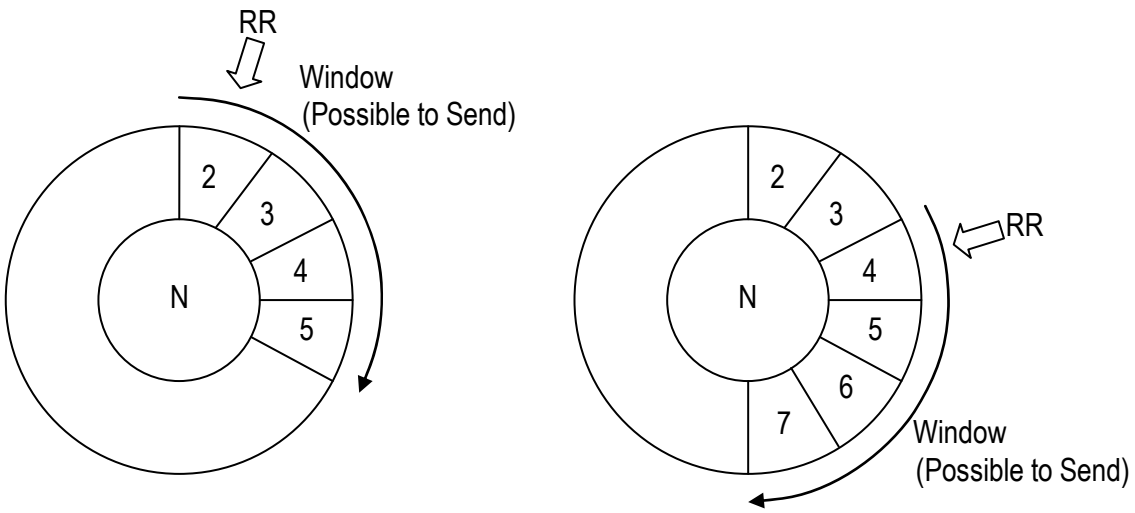

Figure 9.37 Window Control

Window size is defined by negotiation between MS and BS when the connection is established. Though the name of element for negotiation is window size, window size itself is a parameter and each window size parameter is related with the transmitting acknowledge timing and maximum receiving unit without receiving acknowledge.

Figure 9.38 shows the example of the window control sequence when the window size is 4. In the figure, MS transmits the data until the end of the window size when becomes 5 after MS receives RR with N as 2. Since the transmission data reaches the window size, data transmission is suspended until the delivery confirmation is received. When MS receives the RR with N as 4, the window position is updated. Then the data transmission is resumed.

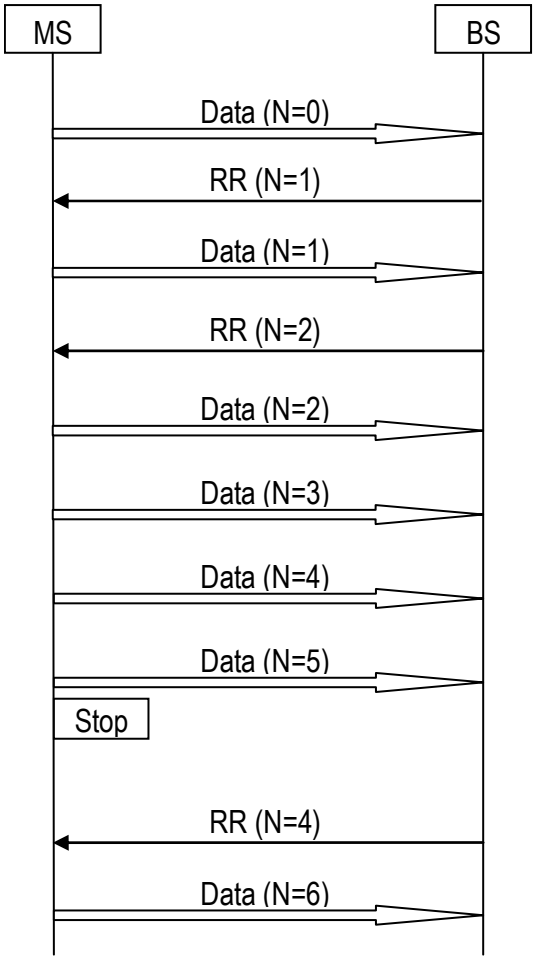

Figure 9.38 Window Control Sequence

9.6.2 Flow Control

Flow control in the radio section is carried out by the notification of busy status using RNR message of the MAC control protocol and window control which is described in Section 9.6.1. Figure 9.39 shows an example of flow control using the RNR message. In the figure, busy state occurs in MS when MS receives data with sequence number N as 1. MS then sends RNR message with N as 2 in order to suspend data transmission from BS. MS sends RR message with N as 2 afterwards to notify BS to resume data transmission when it recovers from the busy state. BS then resumes data transmission.

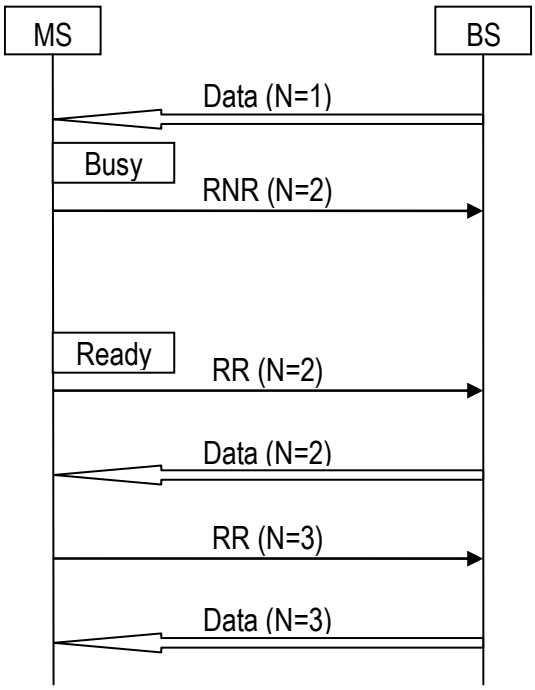

Figure 9.39 RNR Used in Flow Control

RNR message may not reach to the opposite side in case of bad radio condition.
Figure 9.40 shows an example that MS has transmitted RNR to BS, while RNR fails to reach BS. The figure shows the case of window size as 4. BS continues to transmit DL data within its window size to MS. The sender BS suspends data transmission when the DL data transmission reached the window boundary. Even though the RNR does not reach BS, data transmission can be suspended as if busy state occurs on the reception side.

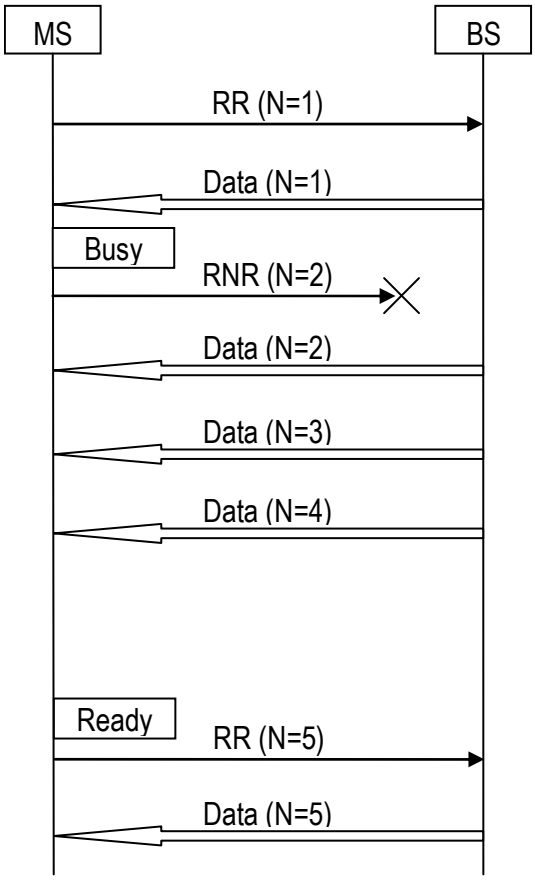

Figure 9.40 Failure of RNR reception

9.6.3 Retransmission Control by SR Method

Reception side sends SREJ message with designation sequence number when it requests retransmission of a certain data. Transmission side retransmits specified data on receiving this SREJ message.
The reception side may transmit REJ message instead of SREJ when there are many data to be retransmitted. Transmission side resumes transmission from the data specified by sequence number on receiving this REJ message.
The transmission side should hold the transmitted data until corresponding received confirmation message (RR/RNR) is received.
Figure 9.41 shows example of SREJ operation.

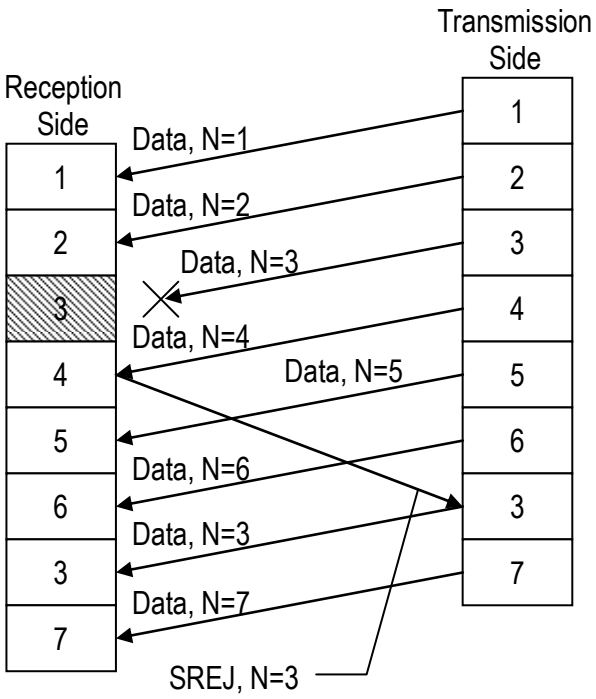

Figure 9.41 Sequence of SREJ

Reception side should start SREJ retransmission timer when MAC sends SREJ message. The timer should be stopped when the timer is expired. SREJ is transmitted again when the timer is expired. But, FRMR will be transmitted and the ARQ operation will be cancelled if the SREJ retransmission count exceeds the limitation.
Figure 9.42 shows an example of SREJ retry operation.

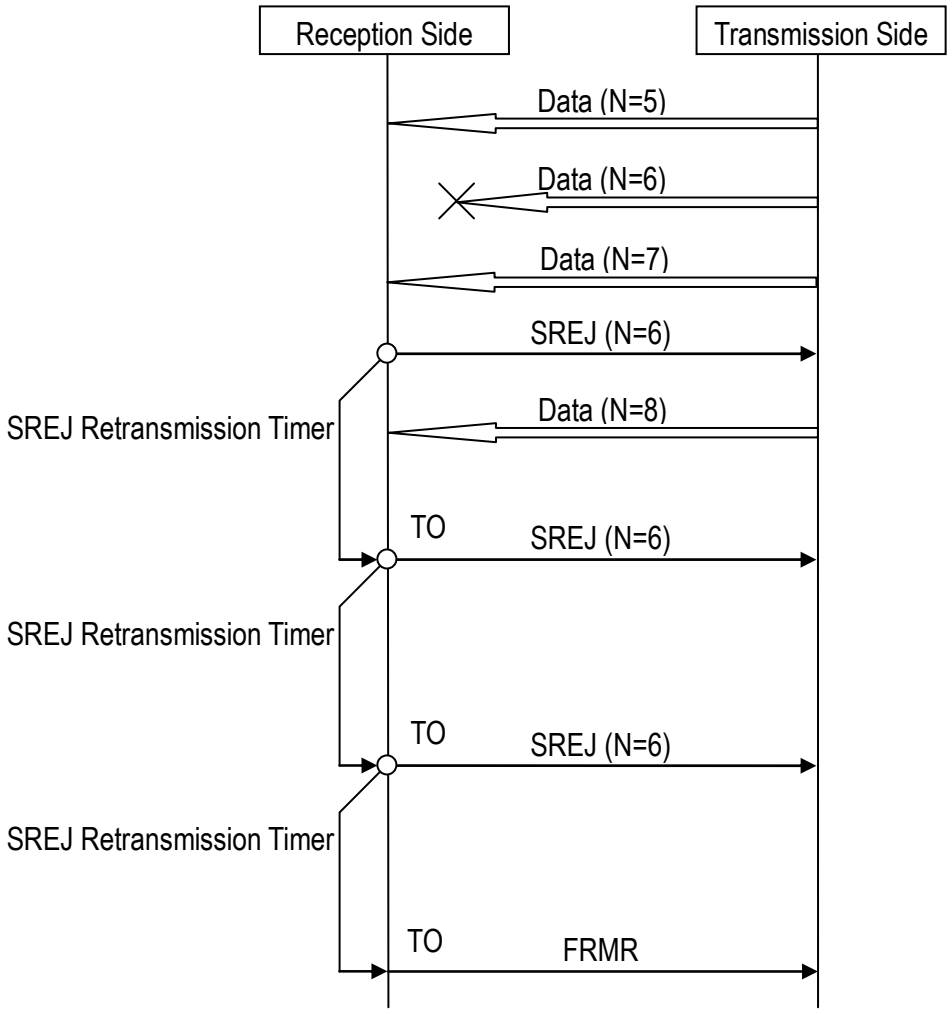

Figure 9.42 MAC-ARQ SREJ Retry Operation

RR should be sent if reception side receives retransmitted data.

Figure 9.43 shows an example of MAC-ARQ operation.

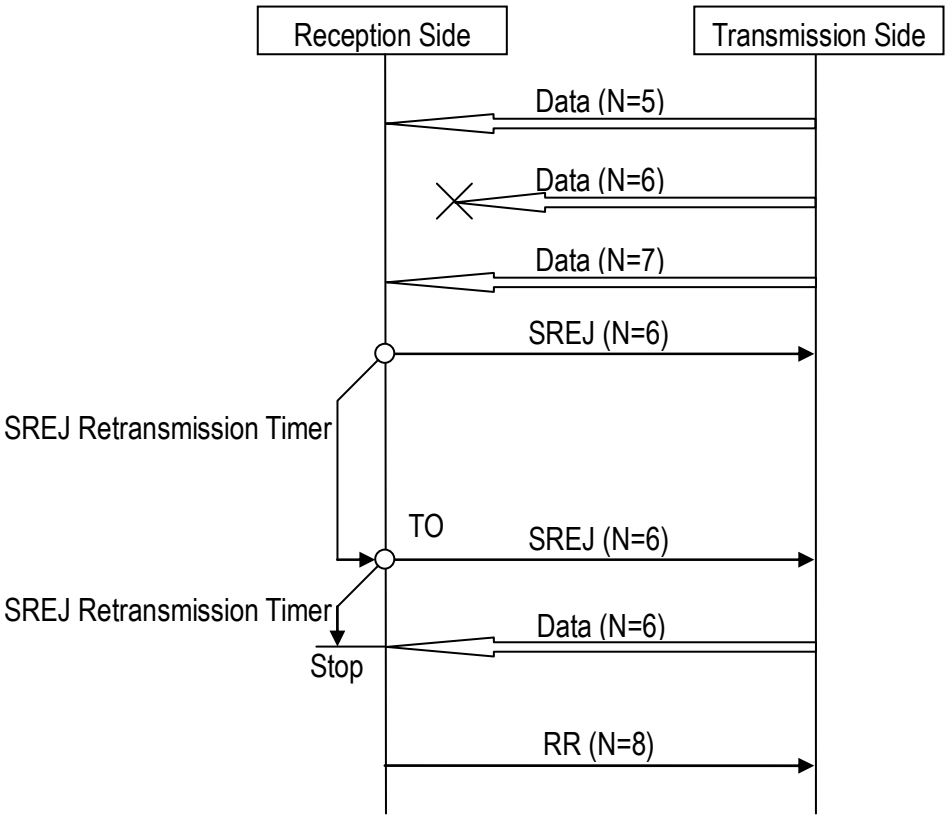

Figure 9.43 ARQ Succession

9.6.4 Notification and Recovery of Error Condition

When abnormal situation occurs, restoration process will be carried out by transmitting FRMR message.

FRMR message will be transmitted in following cases.

- Sequence Number Error
  A frame which has unexpected sequence number is detected.
- Invalid Frame Reception
  When the MAC frame length does not meet for the regulation specified.
- Abnormal Frame Reception
  When MAC frame with header not specified in this specification is detected.
- Over the retransmission times
  This error is detected when the number of retransmission times exceeds the limit or when the number of timer restart exceeds the limit.
- Other Error
  This error is detected when undefined error occurred.

Transmission is re-started when new data come from upper layer.

9.7 Encryption Field

Encryption is applied only to MAC payload. Encryption management is done before the CRC addition.

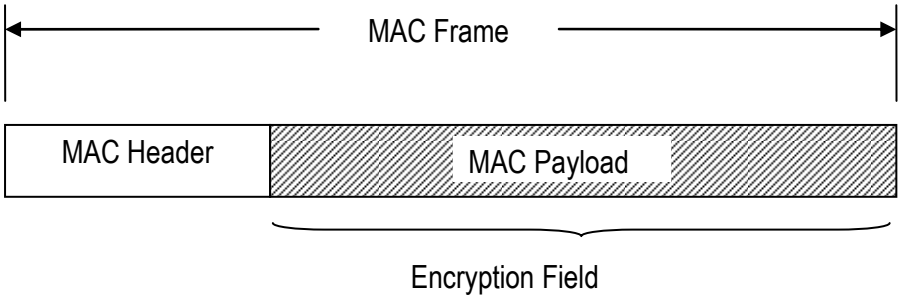

Figure 9.44 Encryption Field

9.8 Semi-Persistent Scheduling (SPS)

Semi-Persistent Scheduling (SPS) is kind of scheduling of using pre-configured grant.

When Semi-Persistent Scheduling is enabled by high layer, the following information is provided:

- Semi-Persistent Scheduling C-MSID;
- Uplink Semi-Persistent Scheduling interval semiPersistSchedIntervalUL and number of empty transmissions before implicit release implicitReleaseAfter, if Semi-Persistent Scheduling is enabled for the uplink;
- Whether twoIntervalsConfig is enabled or disabled for uplink;
- Downlink Semi-Persistent Scheduling interval semiPersistSchedIntervalDL and number of configured HARQ processes for Semi-Persistent Scheduling numberOfConfSPS-Processes, if Semi-Persistent Scheduling is enabled for the downlink;

When Semi-Persistent Scheduling for uplink or downlink is disabled by high layer, the corresponding configured grant or configured assignment shall be discarded.

Chapter 10 Global Mode

10.1 Introduction

XGP Global Mode is an optional mode that introduces some advanced features from 3GPP LTE specifications to improve the system performance and offer better services to the future PHS users.

Global Mode is constructed on the same mobile communication structure as XGP. It is feasible to operate Original PHS, XGP and the optional Global Mode in the co-existing network in some specific conditions and to supply same services within the same area.

XGP Global Mode, which refers to only TDD part of 3GPP technical specifications, specifies the air interface including the physical layer, medium access control layer and radio connection related specifications.

XGP Global Mode supports four releases of 3GPP TDD LTE, including Release 8, 9, 10 and 11.

XGP Global Mode based on higher Release is specified as an evolution of the XGP Global Mode based on lower Release, Therefore, XGP Global Mode based on higher Release has backward compatibility with XGP Global Mode based on lower Releasein the sense that

- Release 8/9 terminal can work in a Release 10 system;
- Release 10 terminal can work in a Release 8/9 system;
- Release 8/9/10 terminal can work in a Release 11 system;
- Release 11 terminal can work in a Release 8/9/10 system.

The XGP Global Mode based on Release 8 is described in section 10.4, the XGP Global Mode based on Release 9 is described in section 10.5 while the XGP Global Mode based on Release 10 is described in section 10.6 and the XGP Global Mode based on Release 11 is described in section 10.7.

In addition to those 3GPP compatible specifications, the XGP unique feature is firstly described in section 10.3.

10.2 Abbreviations and Acronyms for Global Mode

AS Access Stratum

AMBR Aggregate Maximum Bit Rate

CA Carrier Aggregation

CDD Cyclic Delay Diversity

CIF Carrier Indicator Field

CMAS Commercial Mobile Alert Service

CQI Channel Quality Indication

CDD Cyclic Delay Diversity

CSG Closed Subscriber Group

CSI Channel State Information

DCI Downlink Control Information

DFTS-OFDM DFT Spread OFDM

DL-SCH Downlink Shared Channel

eNB E-UTRAN NodeB

ETWS Earthquake and Tsunami Warning System

E-UTRAN Evolved Universal Terrestrial Radio Access

GBR Guarnteed Bit Rate

ICIC Inter-Cell Interference Coordination

MBMS Multimedia Broadcast Multicast ServiceMBSFN Multimedia Broadcast multicast service Single Frequency Network

MDT Minimization of Driving Test

MMSE Minimum Mean Square Error

OOB Out of Band

PBCH Physical Broadcast Channel

PCFICH Physical Control Format Indicator Channel

PDCCH Physical Downlink Control Channel

PDSCH	Physical Downlink Shared Channel
PDU	Protocol Data Units
PHICH	Physical Hybrid ARQ Indicator Channel
PLMN	Public Land Mobile Network
PMCH	Physical Multicast Channel
PRACH	Physical Random Access Channel
PUCCH	Physical Uplink Control Channel
PUSCH	Physical Uplink Shared Channel
PWS	Public Warning System
RAT	Radio Access Technology
RLC	Radio Link Control
RLF	Radio Link Failure
ROHC	Robust Header Compression
SN	Sequence Number
SON	Self-Organizing Network
SRB	Signaling Radio Bearer
SSAC	Service Specific Access Control
UCI	Uplink Control Information
UL-SCH	Uplink Shared Channel

10.3 XGP unique optional feature

This section describes XGP original feature specified optionally for Global Mode. By considering the total operation balance, this feature of unique PWS may or may not be introduced in the Global Mode network.

10.3.1 Public Waning System (PWS)

10.3.1.1 Overview

The characteristic of PWS in XGP is preventing UE from reading the repetitions of ETWS

messages by informing UE the IE ETWSValueTag in Paging.

10.3.1.2 Reception of the *Paging* message by the UE

The UE which supports unique PWS feature in XGP will handle the IE “etws-Indication” as described below in this subclause, instead of just the relevant portion in the procedure described in 5.3.2.3 of [39].

1> if the *etws-Indication* is included, and UE is ETWS capable

2> if IE *ETWSValueTag* is not included, or

2> if IE *ETWSValueTag* is included and it indicates the ETWS message broadcasting in the cell has been updated.

3>re-acquire *SystemInformationBlockType1* immediately, i.e., without waiting until the next system information modification period boundary;

3>if the *schedulingInfoList* indicates that *SystemInformationBlockType10* is present:

4>acquire *SystemInformationBlockType10*;

3> if the *schedulingInfoList* indicates that *SystemInformationBlockType11* is present:

4>acquire *SystemInformationBlockType11*;

10.3.1.3 Actions upon reception of the SystemInformationBlockType1 message

Details of actions upon reception of the SystemInformationBlockType1 are described in 10.6 of [39].

10.3.1.4 Actions upon reception of SystemInformationBlockType10 message

Details of actions upon reception of the SystemInformationBlockType10 are described in 10.6 of [39].

10.3.1.5 Actions upon reception of SystemInformationBlockType11 message

Details of actions upon reception of the SystemInformationBlockType11 are described in 10.6 of [39].

10.3.1.6 Actions upon reception of SystemInformationBlockType12 message

Details of actions upon reception of the SystemInformationBlockType12 are described in 10.6 of [39].

10.3.1.7 *Paging message update*

In order to support the PWS feature in XGP Global Mode, Paging-v9e0-IEs-XGP is introduced into Paging message. “etwsValueTag” field in Paging-v9e0-IEs-XGP indicates if the ETWS message broadcasting in the cell has been updated.

Paging message update

```
-- ASN1START
…

Paging-v890-IEs ::=                SEQUENCE {
    lateNonCriticalExtension        OCTET STRING(CONTAINING Paging-v9e0-IEs-XGP)
OPTIONAL,  -- Need OP
    nonCriticalExtension            Paging-v920-IEs                              OPTIONAL
}

…
Paging-v9e0-IEs-XGP ::=            SEQUENCE {
        etwsValueTag              INTEGER (0..31) ,
}
…
-- ASN1STOP
```

10.4 Specification - referring to “Release 8 of 3GPP”

References:

Release 8 of 3GPP technical specifications that XGP Global Mode refers to are listed below:

[1] TS 36.101 http://www.3gpp.org/ftp/Specs/archive/36_series/36.101/36101-8h0.zip, Evolved Universal Terrestrial Radio Access (E-UTRA); User Equipment (UE) radio transmission and reception, <Ver 8.17.0 (2012-03)>

[2] TS 36.104 http://www.3gpp.org/ftp/Specs/archive/36_series/36.104/36104-8c0.zip, Evolved Universal Terrestrial Radio Access (E-UTRA); Base Station (BS) radio transmission and

reception, <Ver 8.12.0 (2011-06)>

[3] TS 36.201 http://www.3gpp.org/ftp/Specs/archive/36_series/36.201/36201-830.zip, Evolved Universal Terrestrial Radio Access (E-UTRA); LTE physical layer; General description, <Ver 8.3.0 (2009-03)>

[4] TS 36.211 http://www.3gpp.org/ftp/Specs/archive/36_series/36.211/36211-890.zip, Evolved Universal Terrestrial Radio Access (E-UTRA); Physical channels and modulation, <Ver 8.9.0 (2009-12)>

[5] TS 36.212 http://www.3gpp.org/ftp/Specs/archive/36_series/36.212/36212-880.zip, Evolved Universal Terrestrial Radio Access (E-UTRA); Multiplexing and channel coding, <Ver 8.8.0 (2009-12)>

[6] TS 36.213 http://www.3gpp.org/ftp/Specs/archive/36_series/36.213/36213-880.zip, Evolved Universal Terrestrial Radio Access (E-UTRA); Physical layer procedures, <Ver 8.8.0 (2009-09)>

[7] TS 36.214 http://www.3gpp.org/ftp/Specs/archive/36_series/36.214/36214-870.zip, Evolved Universal Terrestrial Radio Access (E-UTRA); Physical layer; Measurements, <Ver 8.7.0 (2009-09)>

[8] TS 36.300 http://www.3gpp.org/ftp/Specs/archive/36_series/36.300/36300-8c0.zip, Evolved Universal Terrestrial Radio Access (E-UTRA) and Evolved Universal Terrestrial Radio Access Network (E-UTRAN); Overall description; Stage 2, <Ver 8.12.0 (2010-04)>

[9] TS 36.304 http://www.3gpp.org/ftp/Specs/archive/36_series/36.304/36304-8a0.zip, Evolved Universal Terrestrial Radio Access (E-UTRA); User Equipment (UE) procedures in idle mode, <Ver 8.10.0 (2012-03)>

[10] TS 36.321 http://www.3gpp.org/ftp/Specs/archive/36_series/36.321/36321-8c0.zip, Evolved Universal Terrestrial Radio Access (E-UTRA); Medium Access Control (MAC) protocol specification, <Ver 8.12.0 (2012-03)>

[11] TS 36.322 http://www.3gpp.org/ftp/Specs/archive/36_series/36.322/36322-880.zip, Evolved Universal Terrestrial Radio Access (E-UTRA); Radio Link Control (RLC) protocol specification, <Ver 8.8.0 (2010-06)>

[12] TS 36.323 http://www.3gpp.org/ftp/Specs/archive/36_series/36.323/36323-860.zip, Evolved Universal Terrestrial Radio Access (E-UTRA); Packet Data Convergence Protocol (PDCP) specification, <Ver 8.6.0 (2009-06)>

[13] TS 36.331 http://www.3gpp.org/ftp/Specs/archive/36_series/36.331/36331-8g0.zip, Evolved Universal Terrestrial Radio Access (E-UTRA); Radio Resource Control (RRC); Protocol specification, <Ver 8.16.0 (2011-12)>

Note: The version number of 3GPP specification document can be read as the latest one in the

same release if the document number is updated.

10.4.1 System Overview

10.4.1.1 System Structure

XGP Global Mode is assumed to be operated in the system which consists of MS, BS and Relay Station (RS) which relays communications between BS and MS.

MS is called as User Equipment (UE) and BS is called as E-UTRAN NodeB (eNB) while RS is called as Relay Node (RN) in the reference document.

Details of system structure for XGP Global Mode are described in section 4 of [8].

10.4.1.2 Interface Definition

The system has 'Um' interface and "X2" Interface.

"Um" interface is interface point between MS and BS.

"X2" interface is interface point between BS and BS.

Details of interface are described in section 19 and 20 of [8].

10.4.1.3 Frequency structure

System bandwidth is defined as total bandwidth including guard bandwidth and effective channel bandwidth. Guard bandwidth is defined as the bandwidth to prevent interference to/from the adjacent system.

XGP Global Mode supports system bandwidths as shown in Table 5.6-1 of [1]. Details of Effective Channel Bandwidth and Guard Bandwidth are described in section 5.6 of [1].

10.4.1.4 Access Method

The multiple access method for the XGP Global Mode is based on OFDM with a CP in the downlink, and on Single-Carrier Frequency Division Multiple Access (SC-FDMA) with a CP in the uplink.

Details of access method are described in section 5 of [8] and section 4.2.1 of [3].

10.4.1.5 Frame Structure

Downlink and uplink transmissions are organized into radio frames with 10ms duration for XGP Global Mode. Each radio Frame of length 10ms consists of two half-frames of length 5ms each. Each half-frame consists of five slots of length 1ms.

Slot is called as subframe in the reference document.

XGP Global Mode uses type 2 Frame Structure defined in section 4.2 of [4]. Among all the UL-DL configurations shown in Table 4.2-2 of [4], XGP Global Mode may be configured with UL-DL configuration 0, 1, 2 or 6. The Special subframe configuration of XGP Global Mode may be configuration 5 or 7 shown in Table 4.2-1 of [4].

10.4.1.6 Physical Resource Unit (PRU)

DL Physical resource Unit is defined as consecutive M_L OFDM symbols in the time domain and N_L subcarriers consecutive subcarriers in the frequency domain.

UL Physical resource Unit is defined as M_U consecutive SC-FDMA symbols in the time domain and N_U consecutive subcarriers in the frequency domain.

Details of DL Physical Resource Unit and UL Physical Resource Unit of XGP Global Mode are described in section 6.2 and section 5.2 of [4] respectively.

10.4.1.7 MAC and Radio Connection for Global Mode

MAC layer for XGP Global Mode is split into three sub-layers: MAC sub-layer1(MSL1), MAC sub-layer2(MSL2) and MAC sub-layer3(MSL3).

MAC sub-layer1 performs the functions: Channel Mapping, Multiplexing/De-multiplexing of MAC SDUs, scheduling information reporting, Error correction through HARQ, Padding, etc.

MAC sub-layer2 performs the functions: Transfer of upper layer PDUs, Error Correction through ARQ, Concatenation, segmentation and reassembly of SDUs, Re-segmentation of PDUs, Duplicate detection, etc.

MAC sub-layer3 performs the functions: Header compression and decompression, Transfer of user and control data, In-sequence delivery of upper layer PDUs, Duplicate detection of lower layer SDUs, Ciphering and deciphering, etc.

Radio connection performs the function: Broadcast, Paging, Radio connection management,

Mobility functions, MS measurement reporting and control.

Details of general descriptions of MAC and Radio Connection are described in section 6 and 7 of [8].

10.4.1.8 Protocol Model

Protocol Model for XGP Mode specifies protocol stack for the user-plane and control-plane.

Protocol stack for the user-plane includes MAC sub-layer1, MAC sub-layer2 and MAC sub-layer3. Protocol stack for the control-plane includes MAC sub-layer1, MAC sub-layer2, MAC sub-layer3 and Radio connection sub-layer.

Protocol Model of XGP Global Mode is described in section 4.3 of [8].

10.4.1.9 RF characteristics

RF characteristics for XGP Global Mode include operating bands, transmitter characteristics, receiver characteristics and performance requirement of the BS and MS.

Details of RF characteristics of BS and MS for XGP Global Mode are described in [2] and [1] respectively.

10.4.1.9.1 Operating bands

This subsection defines the operating band, channel bandwidths per operating band and channel raster for XGP Global Mode.

10.4.1.9.2 Operation bands of BS and MS for XGP Global Mode are recommended as defined in section 5 of [2] and [1] respectively. Besides, the XGP Global Mode must support other operating bands defined by the operation country/region.Transmitter characteristics

This subsection defines transmit power, transmit signal quality, output RF spectrum emissions (the emission within the channel bandwidth, the OOB emissions and the far out spurious emission domain) for XGP Global Mode.

Details of BS transmitter characteristics and MS transmitter characteristics for XGP Global Mode are described in section 6 of [2] and [1] respectively.

10.4.1.9.3 Receiver characteristics

This subsection defines reference sensitivity power level, maximum input level and blocking characteristics for XGP Global Mode.

The reference sensitivity power level is the minimum mean power applied to the antenna ports. Maximum input level is defined as the maximum mean power received at the antenna port. The blocking characteristic is a measure of the receiver's ability to receive a wanted signal at its assigned channel frequency.

Details of BS receiver characteristics and MS receiver characteristics for XGP Global Mode are described in section 7 of [2] and [1] respectively.

10.4.1.9.4 Performance requirement

This subsection contains performance requirements for the physical channels of XGP Global Mode. The performance requirements include two parts: single-antenna port performance and transmit diversity performance.

Details of performance requirements of BS and MS for XGP Global Mode are described in section 8 of [2] and [1] respectively.

10.4.2 Physical Channel Specification

10.4.2.1 Overview

Physical channel specification for XGP Global Mode specifies scrambling, modulation, layer Mapping, precoding, mapping to resource elements and channel coding of DL OFDM PHY layer and UL SC PHY layer.

Details of physical layer overview are described in [3] and section 5.1 and 6.1 of [4].

10.4.2.2 The General Conditions for OFDM PHY Layer

The general conditions for OFDM PHY layer specify downlink transmission scheme based on OFDM and OFDM resource structure.

Details of the general conditions for OFDM PHY layer are described in section 6.2 of [4] and section 5.1 of [8].

10.4.2.3 The General Conditions for SC PHY Layer

The general conditions for SC PHY layer specify uplink SC transmission method and SC resource structure.

For XGP Global Mode, the uplink transmission scheme is based on single-carrier FDMA, more specifically DFTS-OFDM.

Details of the general conditions for SC PHY layer are described in section 5.2 of [4] and section 5.2 of [8].

10.4.2.4 DL OFDM PHY Layer

10.4.2.4.1 General structure for downlink physical channels

Downlink physical channels include advanced downlink EDCH, advanced Broadcast Control Channel, advanced downlink ECCH, advanced downlink ECCH Format Indicator Channel and advanced downlink Hybrid-ARQ Indicator Channel.

General structure for downlink physical channels includes Scrambling, Modulation, Layer Mapping, Precoding, Mapping to resource elements and Channel Coding.

Details of Scrambling, Modulation, Layer Mapping, Precoding, Mapping to resource elements for DL physical channels are described in section 6.3 of [4].

10.4.2.4.2 Channel Coding

DL Channel Coding for XGP Global Mode specifies CRC calculation, Code block segmentation and code block CRC attachment, Tail biting convolutional coding, Turbo coding, Rate matching, Code block concatenation and Channel coding for advanced downlink EDCH, advanced Broadcast Control Channel, advanced downlink ECCH, advanced downlink ECCH Format Indicator Channel and advanced downlink Hybrid-ARQ Indicator Channel.

Details of DL Channel coding, multiplexing and interleaving for Global Mode are described in section 5.1 and 5.3 of [5].

10.4.2.4.3 Advanced Downlink EDCH

Advanced Downlink EDCH for XGP Global Mode transmits user traffic data from BS to MS.

Advanced Downlink EDCH for Global Mode is called as physical downlink shared channel

(PDSCH) in the reference document.

Details of physical downlink shared channel are described in section 6.4 of [4].

10.4.2.4.4 Advanced Broadcast Control Channel

Advanced Broadcast Control Channel for XGP Global Mode broadcasts the system control information from BS to MS.

Advanced Broadcast Control Channel for Global Mode is called as physical broadcast channel in the reference document.

Details of physical broadcast channel are described in section 6.6 of [4].

10.4.2.4.5 Advanced Downlink ECCH Format Indicator Channel

Advanced Downlink ECCH Format Indicator Channel for XGP Global Mode carries information about the number of OFDM symbols used for transmission of advanced downlink ECCH in a subframe.

Advanced Downlink ECCH Format Indicator Channel for Global Mode is called as physical control format indicator channel defined in the reference document.

Details of physical control format indicator channel are described in section 6.7 of [4].

10.4.2.4.6 Advanced Downlink ECCH

Advanced Downlink ECCH for XGP Global Mode carries scheduling assignments and other downlink control information.

Advanced Downlink ECCH for Global Mode is called as physical downlink control channel in the reference document.

Details of physical downlink control channel are described in section 6.8 of [4].

10.4.2.4.7 Advanced Downlink Hybrid-ARQ Indicator Channel

Advanced Downlink Hybrid-ARQ Indicator Channel for XGP Global Mode carries the Hybrid-ARQ ACK/NACK information.
Advanced Downlink Hybrid-ARQ Indicator Channel for Global Mode is called as physical hybrid ARQ indicator channel defined in the reference document.

Details of Advanced Downlink Hybrid-ARQ Indicator Channel are described in section 6.9 of [4].

10.4.2.4.8 Pilots

DL pilots for XGP Global Mode specify BS-specific pilots and MS-specific pilots.

Pilots for Global Mode are called as reference signals in the reference document. BS-specific pilots are called as Cell-specific reference signals while MS-specific pilots are called as UE-specific reference signals.

Details of reference signals are described in section 6.10 of [4].

Power control of DL pilots is described in section 5 of [6]

10.4.2.4.9 Synchronization signals

Synchronization signals for XGP Global Mode are used for downlink synchronization. Synchronization signals consist of primary synchronization signal and secondary synchronization signal.

Details of synchronization signals for XGP Global Mode are described in section 6.11 of [4].

10.4.2.5 UL SC PHY Layer

10.4.2.5.1 General structure for uplink physical channels

Uplink physical channels include advanced uplink EDCH, advanced uplink ANCH and advanced Timing Correct Channel.

General structure for uplink physical channels includes Scrambling, Modulation, Layer Mapping, Precoding, Mapping to resource elements and Channel Coding.

Details of Scrambling, Modulation, Layer Mapping, Precoding, Mapping to resource elements for UL physical channels are described in section 5.3 and 5.4 of [4].

10.4.2.5.1 Channel Coding

UL Channel Coding for XGP Global Mode specifies CRC calculation, Code block segmentation and Code block CRC attachment, Tail biting convolutional coding, Turbo coding, Rate matching, Code block concatenation and Channel coding for advanced uplink EDCH, advanced uplink ANCH and advanced Timing Correct Channel .

UL Channel coding, multiplexing and interleaving for XGP Global Mode are described in section 5.1 and 5.2 of [5].

10.4.2.5.2 Advanced Uplink EDCH

Advanced uplink EDCH for XGP Global Mode transmits user traffic data from MS to BS.

Advanced uplink EDCH for Global Mode is called as physical uplink shared channel in the reference document.

Details of physical uplink shared channel are described in section 5.3 of [4].

10.4.2.5.3 Advanced Uplink ANCH

Advanced Uplink ANCH for XGP Global Mode carries uplink control information.

Advanced uplink ANCH is called as physical uplink control channel in the reference document.

Details of physical uplink control channel are described in section 5.4 of [4].

10.4.2.5.4 Advanced Timing Correct Channel

Advanced Timing Correct Channel for XGP Global Mode is used to request connection of individual channel from MS to BS, and to correct transmission timing and transmission power according to measurement result at the channel concerned.

Advanced Timing Correct Channel for Global Mode is called as physical random access channel in the reference document.

Details of physical random access channel are described in section 5.7 of [4].

10.4.2.5.5 Pilots

UL Pilots for Global Mode includes Demodulation pilots and Sounding pilots. Demodulation Pilots are associated with transmission of advanced Uplink ANCH or advanced Uplink EDCH. UL Sounding Pilots are not associated with transmission of advanced Uplink ANCH or advanced Uplink EDCH. The same set of base sequences is used for Demodulation pilots and Sounding pilots.

UL Pilots are called as UL reference signals in the reference document.

Details of UL reference signals are described in section 5.5 of [4].

10.4.2.6 Modulation mapper

The modulation mapper takes binary digits, 0 or 1, as input and produces complex-valued

modulation symbols as output. Modulation mapper for XGP Global Mode includes BPSK, QPSK, 16QAM and 64QAM.

Modulation mapper for XGP Global Mode is described in section 7.1 of [4].

10.4.2.7 Pseudo-random sequence generation

Pseudo-random sequence generation for Global Mode is described in section 7.2 of [4].

10.4.3 Individual Channel Specification

10.4.3.1 Functional Channel Composition

DL functional control channels for XGP Global Mode consist of Advanced Downlink ECCH (ADECCH), Advanced Downlink ECCH Format Indicator Channel and Advanced Downlink Hybrid ARQ Indicator Channel.

UL functional control channel is Advanced Uplink ANCH consisting of Scheduling Request Channel, ACK/NACK Channel and CQI Channel.

Traffic channels for XGP Global Mode consist of Advanced Downlink EDCH and Advanced Uplink EDCH.

10.4.3.2 Mapping to physical channels

Functional channels mapping to physical channels are described in section 4 of [5].

10.4.3.3 PHY control procedures

10.4.3.3.1 Advanced Downlink ECCH procedures

Advanced Downlink ECCH procedures for XGP Global Mode specify MS procedure for determining advanced downlink ECCH assignment and advanced downlink ECCH control information procedure.

Details of advanced Downlink ECCH procedures for Global Mode are described in physical downlink control channel procedures defined in section 9 of [6].

10.4.3.3.2 Advanced Downlink EDCH related procedures

Advanced Downlink EDCH related procedures for XGP Global Mode specify MS procedure for receiving the advanced Downlink EDCH, MS procedure for reporting CQI and ACK/NACK information.

Details of advanced Downlink EDCH related procedures for Global Mode are described in physical downlink shared channel related procedures defined in section 7 of [6].

10.4.3.3.3 Advanced Uplink ANCH related procedures

Advanced Uplink ANCH related procedures for XGP Global Mode specify MS procedure for determining advanced Uplink ANCH assignment and uplink HARQ timing.

Details of advanced Uplink ANCH related procedures for Global Mode are described in physical uplink control channel procedures defined in section 10 of [6].

10.4.3.3.4 Advanced Uplink EDCH related procedures

Advanced Uplink EDCH related procedures for XGP Global Mode specify MS procedure for transmitting the Advanced Uplink EDCH, Sounding procedure, HARQ procedure, and determination of Modulation order, redundancy version and transport block size.

Details of advanced Uplink EDCH related procedures for XGP Global Mode are described in physical uplink shared channel related procedures defined in section 8 of [6].

10.4.3.3.5 UL Power Control

Uplink power control controls the transmit power of the different uplink physical channels. UL Power control for XGP Global Mode specifies uplink power control of advanced Uplink EDCH, uplink power control of advanced Uplink ANCH and uplink power control of Sounding Pilots.

Details of UL Power Control are described in section 5.1 of [6] and UE measurement capabilities are defined in section 5.1 of [7].

10.4.3.4 MAC Layer Control

10.4.3.4.1 Overview

General aspects of MAC layer control structure for Global Mode are described in section 4.3 of [8].

10.4.3.4.2 MAC sub-layer1

MAC sub-layer1 for XGP Global Mode specifies MAC sub-layer1 entities, MAC sub-layer1 procedures (maintenance of uplink time alignment, DL and UL traffic channel transfer, MAC reconfiguration, and MAC reset), and MAC sub-layer1 PDUs for traffic channels and Random Access Response.

MAC sub-layer1 is called as Medium Access Control layer in the reference document.

Details of Medium Access Control layer are described in [10].

10.4.3.4.3 MAC sub-layer2

MAC sub-layer2 for XGP Global Mode specifies MAC-layer2 entities, services expected from MAC sub-layer1 by MAC sub-layer2, services provided to MAC sub-layer3 by MAC sub-layer2, MAC sub-layer2 functions, and MAC sub-layer2 PDUs.

MAC sub-layer2 is called as RLC (Radio Link Control) layer in the reference document.

Details of RLC (Radio Link Control) layer are described in [11].

10.4.3.4.4 MAC sub-layer3

MAC sub-layer3 for XGP Global Mode specifies the Radio Resource Control protocol for the radio interface between MS and BS, the radio related information transported in a transparent container between source BS and target BS upon inter-BS handover, and the radio related information transported in a transparent container between a source or target BS and another system upon inter RAT handover.

MAC sub-layer3 is called as Packet Data Convergence layer in the reference document.

Details of Packet Data Convergence layer are described in [12].

10.4.4 Common Channel Specification

10.4.4.1 Common control channel Composition

Common control channel consists of advanced Broadcast Control channel (BCCH), Paging Control channel (PCCH) and Radom Access channel (RACH).

10.4.4.2 Common control channel reception

This subsection specifies advanced BCCH and PCCH reception.

Details of advanced BCCH reception are described in section 5.5 of [10].

Details of PCCH reception are described in section 5.6 of [10].

10.4.4.3 Paging Group Calculation Rules

Paging Group Calculation Rules for XGP Global Mode specifies the Paging Frame and Paging Occasion calculation rules for the MS in IDLE state.

One Paging Occasion is a subframe where may include addressing information of the paging message. One Paging Frame is a Radio Frame, which may contain one or multiple Paging Occasion(s).

Details of Paging Group Calculation rules for Global Mode are described in section 7 of [9].

10.4.5 Channel Assignment

10.4.5.1 Radio State Management

Radio State Management for XGP Global Mode consists of Active state and IDLE state. A MS is in Active state when a radio connection has been established. If this is not the case, i.e. no radio connection is established, the MS is in IDLE state.

Radio State is called as RRC protocol states or UE states in the reference document.

Active state is called as RRC_CONNECTED and IDLE state is called as RRC_IDLE in the reference document.

Details of Radio State Management for Global Mode are described in section 7.2 of [8].

10.4.5.2 Random Access procedure

Random Access (RA) procedure for XGP Global Mode is used by the MS to access and establish a link to the network. Random access procedure consists of random access initialization, random access resource selection, random access Preamble transmission and random access response reception.

Details of Random Access procedure are described in section 6 of [6] and section 5.1 of [10].

10.4.6 Message Format and Information Elements

10.4.6.1 ADECI format

ADECI format is used to schedule Advanced Downlink EDCH and Advanced uplink EDCH and indicate UL power.

ADECI is called as Downlink control information (DCI) in the reference document.

Details of DCI format are described in 5.3.3 of [6].

10.4.6.2 MSG (BCCH)

BCCH for XGP Global Mode is a downlink channel for broadcasting system control information.

MSG transmitted in BCCH is called as system information in the reference document.

Details of system information are described in section 5.2 of [13].

10.4.6.3 MSG (PCCH)

PCCH for XGP Global Mode is a downlink channel that transfers paging information and system information change notifications. This channel is used for paging when the network does not know the location cell of the UE. Paging Occasion (PO) and Paging Frame (PF) are used for UE to monitor the PCCH.

MSG transmitted in PCCH is called as paging in the reference document.

Message format of PCCH for Global Mode is described in section 7 of 3GPP [9].

10.4.7 Sequence

10.4.7.1 Radio Connection Management Sequence

Radio Connection Management sequence for Global Mode consists of Paging, radio connection release and radio link failure.

Details of radio connection management sequence are described in section 5.3 of [13].

10.4.7.1.1 Paging

The paging sequence for XGP Global Mode is used to transmit paging information to a MS in IDLE state and/ or to inform MSs in IDLE state and MSs in Active state about a system information change. And it can also be used for responding the Radio connection establishment, e.g. to receive an incoming call.

Details of paging sequence are described in section 5.3.2 of [13].

10.4.7.1.2 Radio connection establishment

The Radio connection establishment sequence for XGP Global Mode is used to establish a Radio connection. Radio connection establishment involves signaling radio bearer establishment. The Radio connection Request message includes a MS Identity, establishment Cause for BS and the dedicated radio resource configuration from physical layer to MAC sub-layer3 for the radio connection.

The Radio connection establishment sequence is called as RRC(Radio Resource Control) connection establishment sequence in the reference document.

Details of RRC connection establishment sequence are described in section 5.3.3 of [13].

10.4.7.1.3 Radio connection reconfiguration

The Radio connection reconfiguration sequence for XGP Global Mode is used to modify a Radio connection. The function includes to establish/modify /release radio bearers, to perform handover, and to setup/ modify/ release measurements.

The Radio connection reconfiguration sequence is called as RRC (Radio Resource Control) connection reconfiguration sequence in the reference document.

Details of RRC connection reconfiguration sequence are described in section 5.3.5 of [13].

10.4.7.1.4 Radio connection re-establishment

When one of the following conditions for XGP Global Mode is met: upon detecting radio link failure, or upon handover failure, or upon integrity check failure indication from lower layers, or upon a Radio connection reconfiguration failure, the MS initiates the Radio connection re-establishment sequence in case security between MS and BS has been activated. The purpose of this procedure is to re-establish the Radio connection, which involves the resumption of signaling radio bearer operation and the re-activation of security.

The Radio connection re-establishment sequence in 3GPP is called as RRC (Radio Resource Control) connection re-establishment sequence in reference document.

Details of RRC connection re-establishment sequence are described in section 5.3.7 of [13].

10.4.7.1.5 Radio connection release

The Radio connection Release sequence for XGP Global Mode is used to release the Radio connection of a MS in Active state, which includes the release of the established radio bearers as well as all radio resources. The Radio connection Release message includes the release cause, possibly Redirected Carrier Information and possibly Mobility Control Information for Idle Mode.

The radio connection release sequence is called as RRC (Radio Resource Control) connection in reference document.

Details of radio connection release sequence are described in section 5.3.8 of [13].

10.4.7.1.6 Radio Link Failure

The radio link failure sequence for XGP Global Mode is use to monitor the radio link availability. It is divided into two phase: one is that UE based on timer and counting to perform upon radio problem detection and leads to radio link failure detection; Another is started upon radio link failure detection or handover failure, UE performs connection re-establishment sequence or leads to IDLE state.

Details of Radio Link Failure sequence are described in section 5.3.11 of [13].

10.4.7.2 Mobility sequence

10.4.7.2.1 Mobility Management in Idle State

Mobility Management for XGP Global Mode in IDLE state includes Cell selection and Cell reselection.

The Cell selection process allows the UE to select a suitable cell where to camp on in order to access available services.

The Cell reselection procedure allows the UE to select a more suitable cell and camp on it.

Details of Cell selection and Cell reselection are described in section 5.2 of [9].

10.4.7.2.2 Mobility Management in Active State

The Mobility Management in Active state for XGP Global Mode handles all necessary steps for relocation/handover procedures, like processes that precede the final HO decision on the source network side, preparation of resources on the target network side, commanding the MS to the new radio resources and finally releasing resources on the (old) source network side.

Details of mobility management in Active state are described in section 10.1.2 of [8].

10.4.7.3 Measurements

Measurements for XGP Global Mode include intra-frequency measurement and inter-frequency measurement. The measurements to be performed by a MS for intra/inter-frequency mobility can be controlled by BS, using broadcast or dedicated control. In IDLE state, a MS shall follow the measurement parameters defined for cell reselection specified by the BS broadcast. In Active state, a MS shall follow the measurement configurations specified by radio connection signaling directed from the BS.

Details of Measurements for Global Mode are described in section 5.5 of [13].

10.4.8 Access Phase

10.4.8.1 Retransmission Control Method

10.4.8.1.1 HARQ

The characteristic of HARQ in XGP includes N-process Stop-And-Wait and HARQ transmits and retransmits transport blocks. In the downlink, Asynchronous adaptive HARQ is used. In the uplink, synchronous HARQ is used.

Details of HARQ for Global Mode are described in section 5.3 and section 5.4 of [10].

10.4.8.1.2 ARQ

The characteristics of ARQ in XGP Global Mode include ARQ retransmits MSL2 PDUs or MSL2 PDU segments based on MSL2 status reports, Polling for MSL2 status report is used when needed by MSL2 and MSL2 receiver can also trigger MSL2 status report after detecting a missing MSL2 PDU or MSL2 PDU segment.

Details of ARQ for Global Mode are described in section 5.2 of [11].

10.4.8.2 Semi-Persistent Scheduling

Semi-Persistent Scheduling (SPS) in XGP Global Mode is a kind of scheduling of using pre-configured grant. And it is enabled by high layer.

Details of Semi-Persistent Scheduling are described in 5.10 of [10].

10.5 Specification - referring to “Release 9 of 3GPP”

References:

Release 9 of 3GPP technical specifications that XGP Global Mode refers to are listed below:

[14]. TS 36.101 http://www.3gpp.org/ftp/Specs/archive/36_series/36.101/36101-9b0.zip, Evolved Universal Terrestrial Radio Access (E-UTRA); User Equipment (UE) radio transmission and reception, <Ver 9.11.0 (2012-03)>

[15].TS 36.104 http://www.3gpp.org/ftp/Specs/archive/36_series/36.104/36104-9b0.zip, Evolved Universal Terrestrial Radio Access (E-UTRA); Base Station (BS) radio transmission and reception, <Ver 9.11.0 (2012-03)>

[16]. TS 36.201 http://www.3gpp.org/ftp/Specs/archive/36_series/36.201/36201-910.zip, Evolved Universal Terrestrial Radio Access (E-UTRA); LTE physical layer; General description, <Ver 9.1.0 (2010-03)>

[17]. TS 36.211 http://www.3gpp.org/ftp/Specs/archive/36_series/36.211/36211-910.zip, Evolved Universal Terrestrial Radio Access (E-UTRA); Physical channels and modulation, <Ver 9.1.0 (2010-03)>

[18]. TS 36.212 http://www.3gpp.org/ftp/Specs/archive/36_series/36.212/36212-940.zip, Evolved Universal Terrestrial Radio Access (E-UTRA); Multiplexing and channel coding, <Ver 9.4.0 (2011-09)>

[19]. TS 36.213 http://www.3gpp.org/ftp/Specs/archive/36_series/36.213/36213-930.zip, Evolved Universal Terrestrial Radio Access (E-UTRA); Physical layer procedures, <Ver 9.3.0 (2010-10)>

[20]. TS 36.214 http://www.3gpp.org/ftp/Specs/archive/36_series/36.214/36214-920.zip, Evolved Universal Terrestrial Radio Access (E-UTRA); Physical layer; Measurements, <Ver 9.2.0 (2010-06)>

[21]. TS 36.300 http://www.3gpp.org/ftp/Specs/archive/36_series/36.300/36300-990.zip, Evolved Universal Terrestrial Radio Access (E-UTRA) and Evolved Universal Terrestrial Radio Access Network (E-UTRAN); Overall description; Stage 2, <Ver 9.9.0 (2011-12)>

[22] TS 36.304 http://www.3gpp.org/ftp/Specs/archive/36_series/36.304/36304-9a0.zip,

Evolved Universal Terrestrial Radio Access (E-UTRA); User Equipment (UE) procedures in idle mode, <Ver 9.10.0 (2012-03)>

[23]. TS 36.321 http://www.3gpp.org/ftp/Specs/archive/36_series/36.321/36321-960.zip, Evolved Universal Terrestrial Radio Access (E-UTRA); Medium Access Control (MAC) protocol specification, <Ver 9.6.0 (2012-03)>

[24]. TS 36.322 http://www.3gpp.org/ftp/Specs/archive/36_series/36.322/36322-930.zip, Evolved Universal Terrestrial Radio Access (E-UTRA); Radio Link Control (RLC) protocol specification, <Ver 9.3.0 (2010-10)>

[25]. TS 36.323 http://www.3gpp.org/ftp/Specs/archive/36_series/36.323/36323-900.zip, Evolved Universal Terrestrial Radio Access (E-UTRA); Packet Data Convergence Protocol (PDCP) specification, <Ver 9.0.0 (2010-01)>

[26].TS 36.331 http://www.3gpp.org/ftp/Specs/archive/36_series/36.331/36331-9a0.zip, Evolved Universal Terrestrial Radio Access (E-UTRA); Radio Resource Control (RRC); Protocol specification, <Ver 9.10.0 (2012-03)>

Note: The version number of 3GPP specification document can be read as the latest one in the same release if the document number is updated.

10.5.1 Overview

10.5.1.1 Overall architecture

XGP Global Mode is assumed to be operated in the system that consists of MS, BS and Relay Station (RS) which relays communications between BS and MS.

MS is called as User Equipment (UE) and BS is called as E-UTRAN NodeB (eNB) while RS is called as Relay Node (RN) in the reference document.

Overview of Functional Split, Interfaces, Radio Protocol architecture, Synchronization and IP fragmentation for XGP Global Mode is described in section 4 of [21].

Compared to section 10.3, specification in section 10.4 includes a set of enhancement or optimization features. Such enhancement or optimization features are Evolved MBMS (eMBMS), Dual-layer beamforming, Positioning Public Warning System (PWS), Home eNodeB specification (Femto-cell) Self Organizing Networks (SON).

10.5.1.2 Physical layer – Layer 1

Layer 1 for XGP Global Mode is Physical layer.

Overview of Downlink Transmission Scheme, Uplink Transmission Scheme, Transport Channels and E-UTRAN physical layer model for XGP Global Mode is described in section 5 of [21].

10.5.1.3 MAC, RLC, and PDCP layers - Layer 2

Layer 2 for XGP Global Mode consists of MAC layer, RLC layer, PDCP layer.

The Medium Access Control (MAC) layer in section 10.5 is referred to as the MAC sub-layer1 (MSL1) in the XGP Global Mode protocol structure in section 10.4. And, so does Radio Link Control (RLC) layer as MAC sub-layer2 (MSL2), and Packet Data Convergence Protocol (PDCP) layer as MAC sub-layer3 (MSL3).

Overview of layer 2 for XGP Global Mode is described in section 6 of [21].]

10.5.1.4 RRC layer – Layer 3

Radio Resource Control (RRC) in section 10.5 is referred to as the Radio connection in XGP Global Mode protocol structure in section 10.4.
Overview of RRC layer for XGP Global Mode is described in section 7 of [21] which specifies Services and Functions, RRC protocol states & state transitions, Transport of NAS messages and System Information.

10.5.1.5 E-UTRAN identities

E-UTRAN identities include E-UTRAN related UE identities and Network entity related Identities.

Overview of E-UTRAN identities for XGP Global Mode is described in section 8 of [21].

10.5.1.6 ARQ and HARQ

Overview of HARQ principles and ARQ principles for XGP Global Mode is described in section 9 of [21].

10.5.1.7 Mobility

Mobility for XGP Global Mode includes Intra E-UTRAN, Inter RAT, Mobility between E-UTRAN

and Non-3GPP radio technologies, Area Restrictions, Mobility to and from CSG and Hybrid cells, Measurement Model and Hybrid Cells.

Overview of mobility for XGP Global Mode is described in section 10 of [21].

10.5.1.8 Scheduling and Rate Control

Scheduling and Rate Control for XGP Global Mode includes Basic Scheduler Operation, Measurements to Support Scheduler Operation, Rate Control of GBR and UE-AMBR, CQI reporting for Scheduling and Explicit Congestion Notification.

Overview of Scheduling and Rate Control for XGP Global Mode is described in section 11 of [21].

10.5.1.9 DRX in RRC_CONNECTED

DRX in RRC_CONNECTED for XGP Global Mode is in order to enable reasonable UE battery consumption.

Overview of DRX in RRC_CONNECTED for XGP Global Mode is described in section 12 of [21].

10.5.1.10 QoS

QoS for XGP Global Mode includes Bearer service architecture, QoS parameters and QoS support in Hybrid Cells.

Overview of QoS for XGP Global Mode is described in section 13 of [21].

10.5.1.11 Security

Security for XGP Global Mode includes Security termination points, State Transitions and Mobility, AS Key Change in RRC_CONNECTED and Security Interworking.

Overview of Security for XGP Global Mode is described in section 14 of [21].

10.5.1.12 Radio Resource Management aspects

Radio Resource management aspects for XGP Global Mode include RRM functions, RRM architecture and Load balancing control.

Overview of Radio Resource management aspects for XGP Global Mode is described in section 16 of [21].

10.5.1.13 Operation bands

Operation bands of BS and MS for XGP Global Mode are recommended as defined in section 5 of [15] and [14] respectively. Besides, the XGP Global Mode must support other operating bands defined by the operation country/region.

10.5.1.14 UE capabilities

Overview of UE capabilities for XGP Global Mode is described in section 18 of [21].

10.5.1.15 Support for self-configuration and self-optimization

Support for self-configuration and self-optimization for XGP Global Mode includes UE Support for self-configuration and self-optimization, Self-configuration, Self-optimization.

Details of Support for self-configuration and self-optimization for XGP Global Mode are described in section 22 of [21].

10.5.2 Physical layer

10.5.2.1 General description

10.5.2.1.1 Relation to other layers

The physical layer interfaces the Medium Access Control (MAC) layer and the Radio Resource Control (RRC) Layer.

General protocol architecture around physical layer and service provided to higher layers for XGP Global Mode are described in section 4.1 of [16].

10.5.2.1.2 General description of Layer 1

General description of Layer 1 includes Multiple Access, Physical channels and modulation, Channel coding and interleaving, Physical layer procedures and physical layer measurements.

General description of layer 1 for XGP Global mode is described in section 4.2 of [16].

10.5.2.2 Frame Structure

Downlink and uplink transmissions are organized into radio frames with 10ms duration for XGP

Global Mode. Each radio Frame of length 10ms consists of two half-frames of length 5ms each. Each half-frame consists of five subframes of length 1ms.

XGP Global Mode uses type 2 Frame Structure defined in section 4.2 of [17]. Among all the UL-DL configurations shown in Table 4.2-2 of [17], XGP Global Mode may be configured with UL-DL configuration 0, 1, 2 or 6. The Special subframe configuration of XGP Global Mode may be configuration 5 or 7 shown in Table 4.2-1 of [17].

10.5.2.3 Uplink Physical Channels and Modulation

10.5.2.3.1 Overview

An uplink physical channel corresponds to a set of resource elements carrying information originating from higher layers. Physical Uplink Shared Channel (PUSCH), Physical Uplink Control Channel (PUCCH) and Physical Random Access Channel (PRACH) are defined for XGP Global Mode.

An uplink physical signal is used by the physical layer but does not carry information originating from higher layers. Reference signals are defined for XGP Global Mode.

Detailed overview of uplink physical channels and Physical signals are described in section 5.1 of [17].

10.5.2.3.2 Slot structure and physical resources

The transmitted signal in each slot is described by a resource grid of $N_{\mathrm{RB}}^{\mathrm{UL}} N_{\mathrm{sc}}^{\mathrm{RB}}$ subcarriers and $N_{\mathrm{symb}}^{\mathrm{UL}}$ SC-FDMA symbols. Each element in the resource grid is called a resource element. A physical resource block is defined as $N_{\mathrm{symb}}^{\mathrm{UL}}$ consecutive SC-FDMA symbols in the time domain and $N_{\mathrm{sc}}^{\mathrm{RB}}$ consecutive subcarriers in the frequency domain

Details of Resource grid, Resource element and Resource block for XGP Global Mode are described in section 5.2 of [17].

10.5.2.3.3 Physical uplink shared channel

The baseband signal representing the physical uplink shared channel for XGP Global Mode is

defined in terms of the following steps: Scrambling, Modulation, Transform precoding and Mapping to physical resources.

Details of Scrambling, Modulation, Transform precoding and Mapping to physical resources for XGP Global Mode are described in section 5.3 of [17].

10.5.2.3.4 Physical uplink control channel

The physical uplink control channel, PUCCH, carries uplink control information. PUCCH for XGP Global Mode is not transmitted in the UpPTS field.

The physical uplink control channel supports multiple formats as shown in Table 5.4-1 of [17].

Details of PUCCH formats 1, 1a and 1b, PUCCH formats 2, 2a and 2b and Mapping to physical resources for XGP Global Mode are described in section 5.4 of [17].

10.5.2.3.5 Reference signals

Demodulation reference signal and Sounding reference signal are supported in XGP Global Mode.

Details of Generation of the reference signal sequence, Demodulation reference signal and Sounding reference signal are described in section 5.5 of [17].

10.5.2.3.6 SC-FDMA baseband signal generation

SC-FDMA baseband signal generation of all uplink physical signals and physical channels except the physical random access channel are described in section 5.6 of [17] for XGP Global Mode.

10.5.2.3.7 Physical random access channel

Time and frequency structure of physical random access channel, Preamble sequence generation and Baseband signal generation for XGP Global Mode are described in section 5.7 of [17].

10.5.2.3.8 Modulation and upconversion

Modulation and upconversion to the carrier frequency of the complex-valued SC-FDMA baseband signal for each antenna port for XGP Global Mode is shown in section 5.8 of [17].

10.5.2.4 Downlink Physical Channels and Modulation

10.5.2.4.1 Overview

A downlink physical channel corresponds to a set of resource elements carrying information originating from higher layers. Physical Downlink Shared Channel (PDSCH), Physical Broadcast Channel (PBCH), Physical Multicast Channel (PMCH), Physical Control Format Indicator Channel (PCFICH), Physical Downlink Control Channel (PDCCH) and Physical Hybrid ARQ Indicator Channel (PHICH) are defined for XGP Global Mode.

A downlink physical signal corresponds to a set of resource elements used by the physical layer but does not carry information originating from higher layers. Reference signals and Synchronization signal are defined for XGP Global Mode.

Detailed overview of downlink physical channels and physical signals are described in section 6.1 of [17].

10.5.2.4.2 Slot structure and physical resource elements

The transmitted signal in each slot is described by a resource grid of $N_{\mathrm{RB}}^{\mathrm{DL}} N_{\mathrm{sc}}^{\mathrm{RB}}$ subcarriers and $N_{\mathrm{symb}}^{\mathrm{DL}}$ OFDM symbols. Each element in the resource grid is called a resource element. Resource blocks are used to describe the mapping of certain physical channels to resource elements. Physical and virtual resource blocks are defined. Resource-element groups are used for defining the mapping of control channels to resource elements.

Details of Resource grid, Resource elements, Resource blocks and Resource-element groups for XGP Global Mode are described in section 6.2 of [17].

10.5.2.4.3 General structure for downlink physical channels

General processing steps of a downlink physical channel for XGP Global Mode include Scrambling, Modulation, Layer mapping, Precoding and Mapping to resource elements.

Details of Scrambling, Modulation, Layer mapping, Precoding and Mapping to resource elements of a downlink physical channel for XGP Global Mode are described in section 6.3 of [17].

10.5.2.4.4 Physical downlink shared channel

The physical downlink shared channel for XGP Global Mode shall be processed and mapped to resource elements as described in Section 6.3 of [17] with the exceptions stated in section 6.4 of [17].

10.5.2.4.5 Physical broadcast channel

Details of Scrambling, Modulation, Layer mapping and Precoding, Mapping to resource elements of a physical broadcast channel for XGP Global Mode are described in section 6.6 of [17].

10.5.2.4.6 Physical Multicast Channel

The physical multicast channel shall be processed and mapped to resource elements as described in Section 6.3 of [17] with the following exceptions stated in section 6.5 of [17].

10.5.2.4.7 Physical control format indicator channel

The physical control format indicator channel for XGP Global Mode carries information about the number of OFDM symbols used for transmission of PDCCHs in a subframe.

Details of Scrambling, Modulation, Layer mapping and Precoding, Mapping to resource elements of a physical control format indicator channel for XGP Global Mode are described in section 6.7 of [17].

10.5.2.4.8 Physical downlink control channel

The physical downlink control channel for XGP Global Mode carries scheduling assignments and other control information.

Details of PDCCH formats, PDCCH multiplexing and scrambling, Modulation, Layer mapping and precoding and Mapping to resource elements of a physical downlink control channel for XGP Global Mode are described in section 6.8 of [17].

10.5.2.4.9 Physical hybrid ARQ indicator channel

The PHICH for XGP Global Mode carries the hybrid-ARQ ACK/NACK.

Details of Modulation, Resource group alignment, layer mapping and precoding of PHICH for XGP Global Mode are described in section 6.9 of [17].

10.5.2.4.10 Reference signals

Four types of downlink reference signals (Cell-specific reference signals, MBSFN reference signals, UE-specific reference signals, Positioning reference signals) are defined for XGP Global Mode.

Details of Cell-specific reference signals, MBSFN reference signals, UE-specific reference signals, Positioning reference signals for XGP Global Mode are described in section 6.10 of [17].

10.5.2.4.11 Synchronization signals

Synchronization signals for XGP Global Mode include Primary synchronization signal and Secondary synchronization signal.

Details of sequence generation and Mapping to resource elements of Primary synchronization signal and Secondary synchronization signal for XGP Global Mode are described in section 6.11 of [17].

10.5.2.4.12 OFDM baseband signal generation

OFDM baseband signal generation for XGP Global Mode is described in section 6.12 of [17].

10.5.2.4.13 Modulation and upconversion

Modulation and upconversion to the carrier frequency of the downlink complex-valued OFDM baseband signal for XGP Global Mode are described in section 6.13 of [17].

10.5.2.5 Channel coding, multiplexing and interleaving

10.5.2.5.1 Generic procedures

Generic coding procedures include CRC calculation, Code block segmentation and code block CRC attachment, Channel coding, Rate matching and Code block concatenation for XGP Global Mode.

Details of generic coding procedures for XGP Global Mode are described in section 5.1 of [18].

10.5.2.5.2 Uplink transport channels and control information

10.5.2.5.2.1 Uplink shared channel

Coding procedures of uplink shared channel include Transport block CRC attachment, Code

block segmentation and code block CRC attachment, Channel coding of UL-SCH, Rate matching, Code block concatenation, Channel coding of control information, Data and control multiplexing and Channel interleaver for XGP Global Mode.

Details of coding procedures of uplink shared channel for XGP Global Mode are described in section 5.2.2 of [18].

10.5.2.5.2.2 Uplink control information on PUCCH

Chanel coding procedures of uplink control information on PUCCH for XGP Global Mode include Channel coding for UCI HARQ-ACK, Channel coding for UCI scheduling request, Channel coding for UCI channel quality information and Channel coding for UCI channel quality information and HARQ-ACK.

Details of Chanel coding procedures of uplink control information on PUCCH for XGP Global Mode are described in section 5.2.3 of [18].

10.5.2.5.2.3 Uplink control information on PUSCH without UL-SCH data

Coding steps of Uplink control information on PUSCH without UL-SCH data include Channel coding of control information, Control information mapping and Channel interleaver.

Details of coding step of Uplink control information on PUSCH without UL-SCH data for XGP Global Mode are described in section 5.2.4 of [18].

10.5.2.5.3 Downlink transport channels and control information

10.5.2.5.3.1 Broadcast channel

Coding steps of downlink broadcast channel for XGP Global Mode include Transport block CRC attachment, Channel coding and Rate matching.

Details of coding steps of downlink broadcast channel for XGP Global Mode are described in section 5.3.1 of [18].

10.5.2.5.3.2 Downlink shared channel, Paging channel and Multicast channel

Coding steps of downlink shared channel, Paging channel and Multicast channel for XGP Global Mode include Transport block CRC attachment, Code block segmentation and code block CRC attachment, Channel coding, Rate matching and Code block concatenation.

Details of coding steps of downlink shared channel, Paging channel and Multicast channel for XGP Global Mode are described in section 5.3.2 of [18].

10.5.2.5.3.3 Downlink control information

Coding steps of DCI formats (Format 0, 1, 1A, 1B, 1C, 1D, 2, 2A, 2B, 3, 3A) for XGP Global Mode include CRC attachment, Channel coding and Rate matching.

Detailed of coding steps of DCI formats for XGP Global Mode are described in section 5.3.3 of [18].

10.5.2.5.3.4 Control format indicator

Channel Coding of control format indicator for XGP Global Mode is described in section 5.3.4 of [18].

10.5.2.5.3.5 HARQ indicator (HI)

Channel Coding of HARQ indicator for XGP Global Mode is described in section 5.3.5 of [18].

10.5.2.6 Physical layer procedures

10.5.2.6.1 Synchronization procedures

Synchronization procedures for XGP Global Mode include Cell search and Timing synchronization (Radio link monitoring and Transmission timing adjustments).

Details of Synchronization procedures for XGP Global Mode are described in section 4 of [19].

10.5.2.6.2 Power control

10.5.2.6.2.1 Uplink power control

Detailed power control of physical uplink shared channel, physical uplink control channel and Sounding Reference Symbol for XGP Global Mode are described in section 5.1 of [19].

10.5.2.6.2.2 Downlink power allocation

Downlink power allocation for XGP Global Mode is described in section 5.2 of [19].

10.5.2.6.3 Random access procedure

Random access procedure includes physical non-synchronized random access procedure and Random Access Response Grant.

Details of Random access procedure for XGP Global Mode is described in section 6 of [19].

10.5.2.6.4 Physical downlink shared channel related procedures

Physical downlink shared channel related procedures include UE procedure for receiving the physical downlink shared channel, UE procedure for reporting channel quality indication (CQI), precoding matrix indicator (PMI) and rank indication (RI) and UE procedure for reporting ACK/NACK.

10.5.2.6.4.1 UE procedure for receiving the physical downlink shared channel

UE procedures for receiving different transmission scheme of the PDSCH include Single-antenna port scheme, Transmit diversity scheme, Large delay CDD scheme, Closed-loop spatial multiplexing scheme, Multi-user MIMO scheme, Resource allocation and Modulation order and transport block size determination.

UE procedures for receiving different transmission scheme for XGP Global Mode are described in section 7.1 of [19].

10.5.2.6.4.2 UE procedure for reporting channel quality indication (CQI), precoding matrix indicator (PMI) and rank indication (RI)

UE procedures for reporting CQI/PMI/RI include aperiodic CQI/PMI/RI Reporting using PUSCH and periodic CQI/PMI/RI Reporting using PUCCH.

Details of UE procedures for reporting CQI/PMI/RI for XGP Global Mode are described in section 7.2 of [19].

10.5.2.6.4.3 UE procedure for reporting ACK/NACK

ACK/NACK bundling and ACK/NACK multiplexing are supported by higher layer configuration for XGP Global Mode.

Details of UE procedure for reporting ACK/NACK for XGP Global Mode are described in section 7.3 of [19].

10.5.2.6.5 Physical uplink shared channel related procedures

Physical uplink shared channel related procedures for XGP Global Mode include Resource Allocation for PDCCH DCI Format 0, UE sounding procedure, UE ACK/NACK procedure, UE PUSCH Hopping procedure, Modulation order, redundancy version and transport block size determination and UE Transmit Antenna Selection.

Details of Physical uplink shared channel related procedures for XGP Global Mode are described in section 8 of [19].

10.5.2.6.6 Physical downlink control channel procedures

Physical downlink control channel procedures for XGP Global Mode include UE procedure for determining physical downlink control channel assignment and PDCCH validation for semi-persistent scheduling.

Details of physical downlink control channel procedures for XGP Global Mode are described in section 9 of [19].

10.5.2.6.7 Physical uplink control channel procedures

Physical uplink control channel procedures for XGP Global Mode include UE procedure for determining physical uplink control channel assignment and uplink ACK/NACK timing.

Details of physical uplink control channel procedures for XGP Global Mode are described in section 10 of [19].

10.5.2.7 Measurements

10.5.2.7.1 UE measurement capabilities

UE measurement capabilities for XGP Global Mode are defined in section 5.1 of [20].

10.5.2.7.2 E-UTRAN measurement abilities

E-UTRAN measurement abilities for XGP Global Mode are defined in section 5.2 of [20].

10.5.3 MAC layer – MSL1

10.5.3.1 General

10.5.3.1.1 MAC architecture

MAC architecture for XGP Global Mode is described in section 4.2 of [23].

10.5.3.1.2 Services

MAC layer services provided to upper layers and expected from physical layer for XGP Global Mode are described in section 4.3 of [23].

10.5.3.1.3 Functions

Functions supported by MAC layer for XGP Global Mode are described in section 4.4 of [23].

10.5.3.1.4 Channel structure

10.5.3.1.4.1 Transport Channels

The transport channels used by MAC layer for XGP Global Mode are described in section 4.5.1 of [23].

10.5.3.1.4.2 Logical Channels

The logical channels used by MAC layer for XGP Global Mode are described in section 4.5.2 of [23].

10.5.3.1.4.3 Mapping of Transport Channels to Logical Channels

Mapping of Transport Channels to logical channels for XGP Global Mode is described in section 4.5.3 of [23].

10.5.3.2 MAC procedures

10.5.3.2.1 Random Access procedure

Random Access procedure for XGP Global Mode includes Random Access Procedure initialization, Random Access Resource selection, Random Access Preamble transmission,

Random Access Response reception, Contention Resolution and Completion of the Random Access procedure.

Details of Random Access procedure for XGP Global Mode are described in section 5.1 of [23].

10.5.3.2.2 Maintenance of Uplink Time Alignment

Maintenance of Uplink Time Alignment for XGP Global Mode is described in section 5.2 of [23].

10.5.3.2.3 DL-SCH data transfer

DL-SCH data transfer procedure for XGP Global Mode includes DL Assignment reception, HARQ operation, Disassembly and demultiplexing.

Details of DL-SCH data transfer for XGP Global Mode are described in section 5.3 of [23].

10.5.3.2.4 UL-SCH data transfer

UL-SCH data transfer procedure for XGP Global Mode includes UL Grant reception, HARQ operation, Multiplexing and assembly, Scheduling Request, Buffer Status Reporting and Power Headroom Reporting.

Details of UL-SCH data transfer for XGP Global Mode are described in section 5.4 of [23].

10.5.3.2.5 PCH reception

PCH reception procedure for XGP Global Mode is described in section 5.5 of [23].

10.5.3.2.6 BCH reception

BCH reception procedure for XGP Global Mode is described in section 5.6 of [23].

10.5.3.2.7 Discontinuous Reception (DRX)

Discontinuous Reception procedure for XGP Global Mode is described in section 5.7 of [23].

10.5.3.2.8 MAC reconfiguration

MAC reconfiguration procedure for XGP Global Mode is described in section 5.8 of [23].

10.5.3.2.9 MAC Reset

MAC Reset procedure for XGP Global Mode is described in section 5.9 of [23].

10.5.3.2.10 Semi-Persistent Scheduling

Semi-Persistent Scheduling procedure for XGP Global Mode is described in section 5.10 of [23].

10.5.3.2.11 Handling of unknown, unforeseen and erroneous protocol data

Handling of unknown, unforeseen and erroneous MAC layer protocol data for XGP Global Mode is described in section 5.11 of [23].

10.5.3.3 Protocol Data Units, formats and parameters

10.5.3.3.1 Protocol Data Units

A MAC PDU is a bit string that is byte aligned in length. MAC PDU and MAC control elements for XGP Global Mode are described in section 6.1 of [23].

10.5.3.3.2 Formats and parameters

MAC header for DL-SCH and UL-SCH, MAC header for Random Access Response and MAC payload for Random Access Response are described in section 6.2 of [23].

10.5.3.4 Variables and constants

MAC layer variables and constants for XGP Global Mode include RNTI values, Backoff Parameter values, PRACH Mask Index values, Subframe_Offset values, TTI_BUNDLE_SIZE value, DELTA_PREAMBLE values and HARQ RTT Timer.

Details of MAC layer variables and constants for XGP Global Mode are described in section 7 of [23].

10.5.4 Radio Link Control (RLC) layer – MSL2

10.5.4.1 General

10.5.4.1.1 RLC architecture

Functions of the RLC layer are performed by RLC entities. An RLC entity can be configured to perform data transfer in one of the following three modes: Transparent Mode (TM), Unacknowledged Mode (UM) or Acknowledged Mode (AM).

Details of RLC architecture for XGP Global Mode are described in section 4.2 of [24].

10.5.4.1.2 Services

RLC layer services provided to upper layers and expected from lower layers are described in section 4.3 of [24].

10.5.4.1.3 Functions

Functions supported by RLC layer for XGP Global Mode are described in section 4.4 of [24].

10.5.4.1.4 Data available for transmission

Details of data available for transmission in the RLC layer for XGP Global Mode are described in section 4.5 of [24].

10.5.4.2 Procedures

10.5.4.2.1 Data transfer procedures

RLC layer Data transfer procedures for XGP Global Mode include TM data transfer, UM data transfer and AM data transfer.

Details of RLC layer data transfer procedures for XGP Global Mode are described in section 5.1 of [24].

10.5.4.2.2 ARQ procedures

ARQ procedures for XGP Global Mode include Retransmission, Polling and Status reporting.

Details of ARQ procedures for XGP Global Mode are described in section 5.2 of [24].

10.5.4.2.3 SDU discard procedures

SDU discard procedures for XGP Global Mode are described in section 5.3 of [24].

10.5.4.2.4 Re-establishment procedure

RLC layer Re-establishment procedure for XGP Global Mode is described in section 5.4 of [24].

10.5.4.2.5 Handling of unknown, unforeseen and erroneous protocol data

Handling of unknown, unforeseen and erroneous RLC layer protocol data for XGP Global Mode is

described in section 5.5 of [24].

10.5.4.3 Protocol data units, formats and parameters

10.5.4.3.1 Protocol data units

RLC PDUs can be categorized into RLC data PDUs and RLC control PDUs.

Details of RLC data PDU and RLC control PDU for XGP Global Mode are described in section 6.1 of [24].

10.5.4.3.2 Formats and parameters

The formats and parameters of RLC PDUs for XGP Global Mode are described in section 6.2 of [24].

10.5.4.4 Variables, constants and timers

RLC layer variables, constants, timers and configurable parameters for XGP Global Mode are described in section 7 of [24].

10.5.5 Packet Data Convergence Protocol (PDCP) layer – MSL3

10.5.5.1 General

10.5.5.1.1 PDCP architecture

PDCP structure and PDCP entities for XGP Global Mode are described in section 4.2 of [25].

10.5.5.1.2 Services

PDCP layer services provided to upper layers and expected from physical layer for XGP Global Mode are described in section 4.3 of [25].

10.5.5.1.3 Functions

PDCP layer supported functions for XGP Global Mode are described in section 4.4 of [25].

10.5.5.1.4 Data available for transmission

Details of data available for transmission in the PDCP layer for XGP Global Mode are described

in section 4.5 of [25].

10.5.5.2 PDCP procedures

10.5.5.2.1 PDCP Data Transfer Procedures

UL PDCP Data Transfer Procedures and DL PDCP Data Transfer Procedures are described in section 5.1 of [25]

10.5.5.2.2 Re-establishment procedure

PDCP layer Re-establishment procedure for XGP Global Mode is described in section 5.2 of [25].

10.5.5.2.3 PDCP Status Report

PDCP Status Report procedure for XGP Global Mode are described in section 5.3 of [25].

10.5.5.2.4 PDCP discard

PDCP discard procedure for XGP Global Mode is described in section 5.4 of [25].

10.5.5.2.5 Header Compression and Decompression

PDCP layer Header Compression and Decompression procedures for XGP Global Mode are described in section 5.5 of [25].

10.5.5.2.6 Ciphering and Deciphering

PDCP layer Ciphering and Deciphering procedures for XGP Global Mode are described in section 5.6 of [25].

10.5.5.2.7 Integrity Protection and Verification

PDCP layer Integrity Protection and Verification procedures for XGP Global Mode are described in section 5.7 of [25].

10.5.5.2.8 Handling of unknown, unforeseen and erroneous protocol data

Handling of unknown, unforeseen and erroneous PDCP layer protocol data for XGP Global Mode is described in section 5.8 of [25].

10.5.5.3 Protocol data units, formats and parameters

10.5.5.3.1 Protocol data units

PDCP PDUs can be categorized into PDCP data PDUs and PDCP control PDUs.

Details of PDCP data PDU and PDCP control PDU for XGP Global Mode are described in section 6.1 of [25].

10.5.5.3.2 Formats

Different PDCP PDUs are supported for XGP Global Mode: Control plane PDCP Data PDU, User plane PDCP Data PDU with long PDCP SN , User plane PDCP Data PDU with short PDCP SN, PDCP Control PDU for interspersed ROHC feedback packet and PDCP Control PDU for PDCP status report.

Detailed formats of PDCP PDUs for XGP Global Mode are described in section 6.2 of [25].

10.5.5.3.3 Parameters

PDCP layer parameters for XGP Global Mode are described in section 6.3 of [25].

10.5.5.4 Variables, constants and timers

PDCP layer variables, constants and timers for XGP Global Mode are described in section 7 of [25].

10.5.6 Radio Resource Control (RRC) layer

10.5.6.1 General

10.5.6.1.1 Architecture

RRC layer architecture for XGP Global Mode is described in section 4.2 of [26].

10.5.6.1.2 Services

RRC services provided to upper layers and expected from lower layers for XGP Global Mode are described in section 4.3 of [26].

10.5.6.1.3 Functions

RRC layer supported functions for XGP Global Mode are described in section 4.4 of [26].

10.5.6.2 Procedures

10.5.6.2.1 General

General RRC requirements for XGP Global Mode are described in section 5.1 of [26].

10.5.6.2.2 System information

10.5.6.2.2.1 Introduction

System information is divided into the MasterInformationBlock (MIB) and a number of SystemInformationBlocks (SIBs).

Scheduling of System information, System information validity and notification of changes, Indication of ETWS notification and Indication of CMAS notification for XGP Global Mode are described in section 5.2.1 of [26].

10.5.6.2.2.2 System information acquisition

System information acquisition for XGP Global Mode is described in section 5.2.2 of [26].

10.5.6.2.2.3 Acquisition of an SI message

Acquisition of an SI message for XGP Global Mode is described in section 5.2.3 of [26].

10.5.6.2.3 Connection control

10.5.6.2.3.1 Introduction

RRC connection control procedures include RRC connection control, Security and Connected mode mobility.

Overview of connection control procedure is described in section 5.3.1 of [26].

10.5.6.2.3.2 Paging

Paging initiation procedure and Reception procedure of the Paging message by the UE for XGP

Global Mode are described in [22] and section 5.3.2 of [26].

10.5.6.2.3.3 RRC connection establishment

RRC connection establishment procedures for XGP Global Mode include Initiation, Actions related to transmission of RRC Connection Request message, Reception of the RRC Connection establishment related messages, Cell re-selection, Timer expiry, Abortion of RRC connection establishment and Handling of SSAC related parameters.

RRC connection establishment procedure for XGP Global Mode is described in section 5.3.3 of [26].

10.5.6.2.3.4 Initial security activation

Initial security activation procedure for XGP Global Mode is described in section 5.3.4 of [26].

10.5.6.2.3.5 RRC connection reconfiguration

RRC connection reconfiguration procedures include Initiation procedure, Reception of RRC Connection Reconfiguration related message, Reconfiguration failure procedure, Timer expiry procedure, etc.

RRC connection reconfiguration procedures for XGP Global Mode are described in section 5.3.5 of [26].

10.5.6.2.3.6 Counter check

Counter check procedures include Initiation procedure and Reception of the Counter Check message procedure.

Counter check procedures for XGP Global Mode are described in section 5.3.6 of [26].

10.5.6.2.3.7 RRC connection re-establishment

RRC connection re-establishment procedures include Initiation procedure, reception of the RRC Connection Re-establishment related messages, Timer expiry procedure and etc.

RRC connection re-establishment procedures for XGP Global Mode are described in section 5.3.7 of [26].

10.5.6.2.3.8 RRC connection release

RRC connection release procedures include Initiation procedure, Reception of the RRC Connection Release message and Timer expiry procedure.

RRC connection release procedures for XGP Global Mode are described in section 5.3.8 of [26].

10.5.6.2.3.9 RRC connection release requested by upper layers

RRC connection release requested by upper layers for XGP Global Mode is described in section 5.3.9 of [26].

10.5.6.2.3.10 Radio resource configuration

Radio resource configuration procedures include SRB addition/ modification/ release, MAC main reconfiguration, Semi-persistent scheduling reconfiguration, Physical channel reconfiguration and Radio Link Failure Timers and Constants reconfiguration.

Radio resource configuration procedures for XGP Global Mode are described in section 5.3.10 of [26].

10.5.6.2.3.11 Radio link failure related actions

Radio link failure related actions include Detection of physical layer problems in RRC_CONNECTED, Recovery of physical layer problems and Detection of radio link failure.

Radio link failure related actions for XGP Global Mode are described in section 5.3.11 of [26].

10.5.6.2.3.12 UE actions upon leaving RRC_CONNECTED

UE actions upon leaving RRC_CONNECTED for XGP Global Mode is described in section 5.3.12 of [26].

10.5.6.2.3.13 UE actions upon PUCCH/ SRS release request

UE actions upon PUCCH/ SRS release request for XGP Global Mode is described in section 5.3.13 of [26].

10.5.6.2.3.14 Proximity indication

Initiation and Actions related to transmission of Proximity indication message for XGP Global

Mode are described in section 5.3.14 of [26].

10.5.6.2.4 Inter-RAT mobility

Inter-RAT mobility procedures include Handover to E-UTRA procedure, Mobility from E-UTRA procedure and Inter-RAT cell change order to E-UTRAN.

Inter-RAT mobility procedures for XGP Global Mode are described in section 5.4 of [26].

10.5.6.2.5 Measurements

Measurements for XGP Global Mode include Measurement configuration, performing measurements, Measurement report triggering, Measurement reporting and Measurement related actions.

Measurements for XGP Global Mode are described in section 5.5 of [26].

10.5.6.2.6 Other procedures

DL and UL information transfer, UE capability transfer and UE information request procedures are described in section 5.6 of [26]. Generic RRC layer error handling for XGP Global Mode is described in section 5.7 of [26].

10.5.6.3 Protocol data units, formats and parameters

10.5.6.3.1 RRC messages

General RRC message structure and RRC Message definitions for XGP Global Mode are described in section 6.2 of [26].

10.5.6.3.2 RRC information elements

RRC information elements include System information blocks, Radio resource control information elements, Security control information elements, Mobility control information elements, Measurement information elements and other information elements.

RRC information elements for XGP Global Mode are described in section 6.3 of [26].

10.5.6.3.3 RRC multiplicity and type constraint values

RRC multiplicity and type constraint values for XGP Global Mode is described in section 6.4 of [26].

10.5.6.4 Variables and constants

RRC layer UE variables, Counters, Timers and Constants for XGP Global Mode are described in section 7 of [26].

10.5.6.5 Protocol data unit abstract syntax

Structure of encoded RRC messages, Basic production, extension and Padding for XGP Global Mode are described in section 8 of [26].

10.5.6.6 Specified and default radio configurations

10.5.6.6.1 Specified configurations

Logical channel configurations and specified SRB configurations for XGP Global Mode are described in section 9.1 of [26].

10.5.6.6.2 Default radio configurations

Default SRB configurations, Default MAC main configuration, Default semi-persistent scheduling configuration, Default physical channel configuration and Default values timers and constants are described in section 9.2 of [26].

10.5.6.7 Radio information related interactions between network nodes

Radio information related interactions between network nodes include Inter-node RRC messages, Inter-node RRC information element definitions, Inter-node RRC multiplicity and type constraint values and Mandatory information in AS-Config.

Radio information related interactions between network nodes for XGP Global Mode are described in section 10 of [26].

10.5.6.8 UE capability related constraints and performance requirements

UE capability related constraints and Processing delay requirements for RRC procedures are described in section 11 of [26].

10.6 Specification - referring to “Release 10 of 3GPP”

References:

Release 10 of 3GPP technical specifications that XGP Global Mode refers to are listed below:

[27]. TS 36.101 http://www.3gpp.org/ftp/Specs/archive/36_series/36.101/36101-a90.zip, Evolved Universal Terrestrial Radio Access (E-UTRA); User Equipment (UE) radio transmission and reception, < V10.9.0 (2012-12)>

[28].TS 36.104 http://www.3gpp.org/ftp/Specs/archive/36_series/36.104/36104-a90.zip, Evolved Universal Terrestrial Radio Access (E-UTRA); Base Station (BS) radio transmission and reception, < V10.9.0 (2012-12)>

[29]. TS 36.201 http://www.3gpp.org/ftp/Specs/archive/36_series/36.201/36201-a100.zip, Evolved Universal Terrestrial Radio Access (E-UTRA); LTE physical layer; General description, < V10.0.0 (2012-12)>

[30]. TS 36.211 http://www.3gpp.org/ftp/Specs/archive/36_series/36.211/36211-a60.zip, Evolved Universal Terrestrial Radio Access (E-UTRA); Physical channels and modulation, < V10.6.0 (2012-12)>

[31]. TS 36.212 http://www.3gpp.org/ftp/Specs/archive/36_series/36.212/36212-a70.zip, Evolved Universal Terrestrial Radio Access (E-UTRA); Multiplexing and channel coding, < V10.7.0 (2012-12)>

[32]. TS 36.213 http://www.3gpp.org/ftp/Specs/archive/36_series/36.213/36213-a80.zip, Evolved Universal Terrestrial Radio Access (E-UTRA); Physical layer procedures, < V10.8.0 (2012-12)>

[33]. TS 36.214 http://www.3gpp.org/ftp/Specs/archive/36_series/36.214/36214-a10.zip, Evolved Universal Terrestrial Radio Access (E-UTRA); Physical layer; Measurements, < V10.0.0 (2012-12)>

[34]. TS 36.300 http://www.3gpp.org/ftp/Specs/archive/36_series/36.300/36300-a90.zip, Evolved Universal Terrestrial Radio Access (E-UTRA) and Evolved Universal Terrestrial Radio Access Network (E-UTRAN); Overall description; Stage 2, <Ver a.9.0 (2012-12)>

[35] TS 36.304 http://www.3gpp.org/ftp/Specs/archive/36_series/36.304/36304-a60.zip, Evolved Universal Terrestrial Radio Access (E-UTRA); User Equipment (UE) procedures in idle mode, <Ver a.6.0 (2012-06)>

[36]. TS 36.321 http://www.3gpp.org/ftp/Specs/archive/36_series/36.321/36321-a70.zip, Evolved Universal Terrestrial Radio Access (E-UTRA); Medium Access Control (MAC) protocol specification, <Ver a.7.0 (2012-12)>

[37]. TS 36.322 http://www.3gpp.org/ftp/Specs/archive/36_series/36.322/36322-a00.zip, Evolved Universal Terrestrial Radio Access (E-UTRA); Radio Link Control (RLC) protocol specification, <Ver a.0.0 (2010-12)>

[38]. TS 36.323 http://www.3gpp.org/ftp/Specs/archive/36_series/36.323/36323-a20.zip, Evolved Universal Terrestrial Radio Access (E-UTRA); Packet Data Convergence Protocol (PDCP) specification, <Ver a.2.0 (2012-12)>

[39].TS 36.331 http://www.3gpp.org/ftp/Specs/archive/36_series/36.331/36331-a80.zip, Evolved Universal Terrestrial Radio Access (E-UTRA); Radio Resource Control (RRC); Protocol specification, <Ver a.8.0 (2012-12)>

Note: The version number of 3GPP specification document can be read as the latest one in the same release if the document number is updated.

10.6.1 Overview

10.6.1.1 Overall architecture

XGP Global Mode is assumed to be operated in the system that consists of MS, BS and Relay Station (RS) which relays communications between BS and MS.

MS is called as User Equipment (UE) and BS is called as E-UTRAN NodeB (eNB) while RS is called as Relay Node (RN) in the reference document.

Overview of Functional Split, Interfaces, Radio Protocol architecture, Synchronization and IP fragmentation for XGP Global Mode is described in section 4 of [34].

Release 10 of 3GPP extends the features of Release 8 and 9 in order to exceed or at least meet the IMT-Advanced requirements. New features include Carrier Aggregation (CA), enhanced MIMO technologies, enhanced UL transmission and enhanced inter-cell interference coordination techniques for heterogeneous networks (relays, picos and femtos).

- Carrier Aggregation (CA)

In Carrier Aggregation (CA), two or more Component Carriers (CCs) are aggregated in order to support wider transmission bandwidths up to 100MHz. CA feature will allow a more flexible use of diverse spectrum allocations available in an operator network. Existing band allocations to an

individual operator often consists of spectrum fractions in various frequency bands. Therefore offering the possibility to aggregate multiple non-continuous bands is also important as achieving highest data rates.

CA is supported for both contiguous and non-contiguous CCs with each CC limited to a maximum of 110 Resource Blocks in the frequency domain using the Rel-8/9 numerology, as illustrated in Figure 10.6.1.1-1.

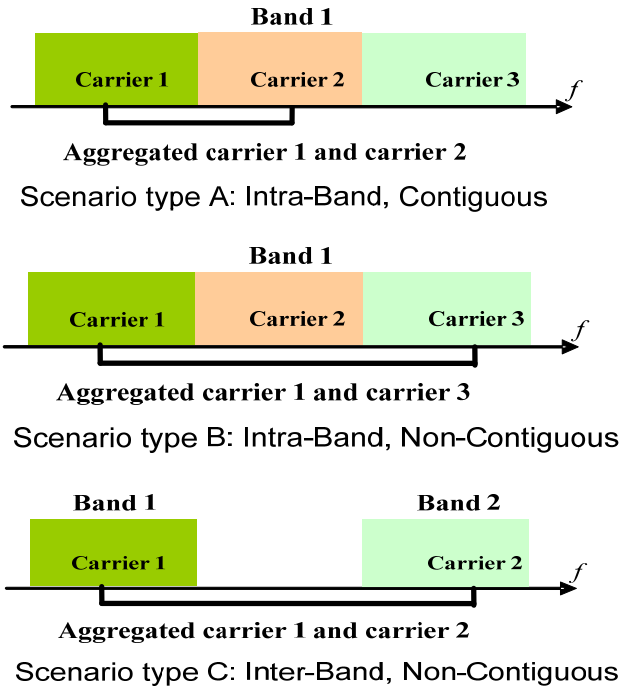

Figure 10.6.1.1-1 Contiguous and Non-Contiguous Carrier Aggregation

- Enhanced Inter-cell Interference Coordination and Hetrogeneous Network (eICIC/HetNet)

For Release 10 networks, enhanced interference coordination methods are needed when the so called Heterogeneous Networks (HetNets) are rolled out. As shown in Figure 10.6.1.1-2, these are networks which are built up by a macro cell to ensure coverage, and by pico cells, femto cells and relay stations to illuminate shaded regions or to enhance the data rate in hot spots.

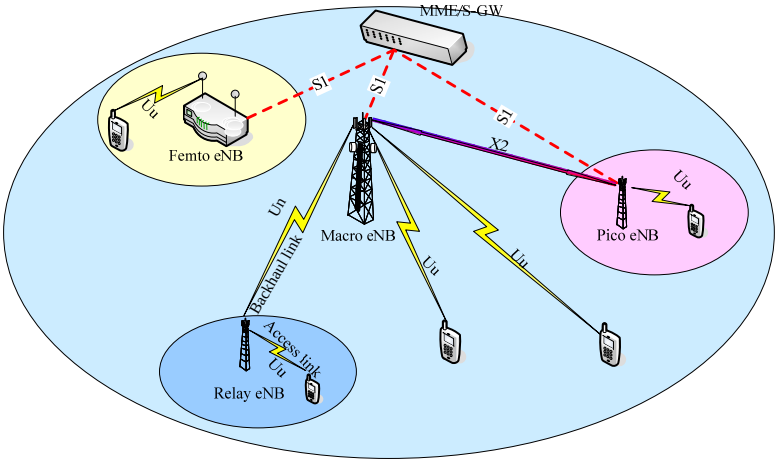

Figure 10.6.1.1-2 Deployment of Heterogeneous Network

All cells are using the same frequency and more severe interference scenarios could exist compared to single layer deployments. In order to cope with these new challenges, the concept of almost blank subframes (ABS) was introduced for the Time-domain ICIC. The frame image is shown in Figure 10.6.1.1.-3.

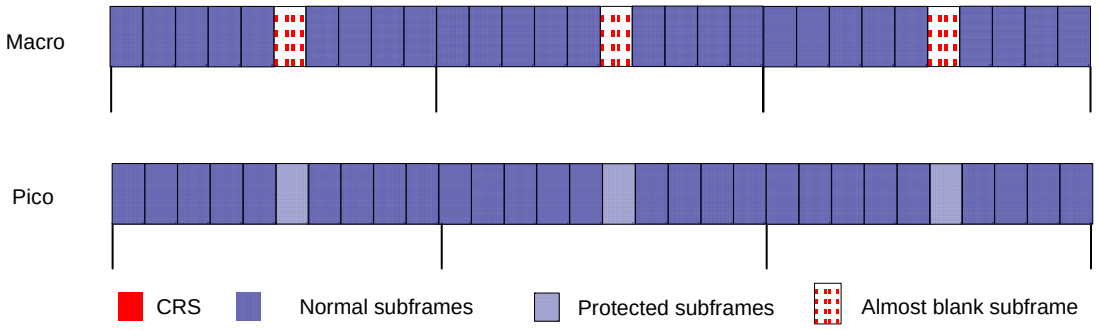

Figure 10.6.1.1-3 Time-domain ICIC

- Enhanced MIMO technologies (MIMO Enhancement)

Enhanced MIMO technologies can support eight downlink layers and four uplink layers each at the maximum, which can improve spectrum efficiency, cell edge performance and average data rates. Besides, the Single User (SU)-MIMO has been introduced in uplink side as well. Some requirements of Uplink-MIMO are described in section 6 and 7 of [27].

- Enhanced UL transmission (Non-Contiguous SC-FDMA)

Multi-cluster assignment of DFTS-OFDM is supported in Realease 10 while only contiguous SC-FDMA is supported in Release 8. In Release 10, the uplink transmission scheme is extended by allowing non-contiguous SC-FDMA with two clusters, i.e. the uplink transmission is not

anymore restricted to the use of consecutive subcarriers, but non-contiguous two clusters may be allocated.

10.6.1.2 Physical layer – Layer 1

Layer 1 for XGP Global Mode is Physical layer.

Overview of Downlink Transmission Scheme, Uplink Transmission Scheme, Transport Channels and E-UTRAN physical layer model for XGP Global Mode is described in section 5 of [34]. In details, CA is described in section 5.5 of [34], enhanced DL MIMO technology is described in section 5.1.5 of [34], enhanced UL MIMO technology is described in section 5.2.6 of [34], enhanced UL transmission is described in section 5.2.1 of [34], and enhanced inter-cell interference coordination is described in section 16.1.5 of [34].

10.6.1.3 MAC, RLC, and PDCP layers - Layer 2

Layer 2 for XGP Global Mode consists of MAC layer, RLC layer, PDCP layer.
The Medium Access Control (MAC) layer in section 10.6 is referred to as the MAC sub-layer1 (MSL1) in the XGP Global Mode protocol structure in section 10.4. And, so does Radio Link Control (RLC) layer as MAC sub-layer2 (MSL2), and Packet Data Convergence Protocol (PDCP) layer as MAC sub-layer3 (MSL3).
Overview of layer 2 for XGP Global Mode is described in section 6 of [34].
In case of CA, the multi-carrier nature of the physical layer is only exposed to the MAC layer for which one HARQ entity is required per serving cell. Overview of Layer 2 Structure for UL/DL with CA configured for XGP Global Mode is described in section 6.4 of [34].

10.6.1.4 RRC layer – Layer 3

Radio Resource Control (RRC) in section 10.6 is referred to as the Radio connection in XGP Global Mode protocol structure in section 10.4.
Overview of RRC layer for XGP Global Mode is described in section 7 of [34] which specifies Services and Functions, RRC protocol states & state transitions, Transport of NAS messages and System Information.
When CA is configured, the UE only has one RRC connection with the network. At RRC connection establishment/re-establishment/handover, one serving cell provides the NAS mobility information (e.g. TAI), and at RRC connection re-establishment/handover, one serving cell provides the security input. This cell is referred to as the Primary Cell (PCell). Depending on UE capabilities, Secondary Cells (SCells) can be configured to form together with the PCell a set of

serving cells. Overview of main services and functions of the RRC sublayer with CA configured for XGP Global Mode is described in section 7.5 of [34].

10.6.1.5 E-UTRAN identities

E-UTRAN identities include E-UTRAN related UE identities and Network entity related Identities. Overview of E-UTRAN identities for XGP Global Mode is described in section 8 of [34].

10.6.1.6 ARQ and HARQ

Overview of HARQ principles and ARQ principles for XGP Global Mode is described in section 9 of [34].

10.6.1.7 Mobility

Mobility for XGP Global Mode includes Intra E-UTRAN, Inter RAT, Mobility between E-UTRAN and Non-3GPP radio technologies, Area Restrictions, Mobility to and from CSG and Hybrid cells, Measurement Model and Hybrid Cells.

Overview of mobility for XGP Global Mode is described in section 10 of [34].

When CA is configured, the "current cell" above refers to any serving cell of the configured set of serving cells. Overview of mobility with CA configured for XGP Global Mode is described in section 10.1.3 of [34].

10.6.1.8 Scheduling and Rate Control

Scheduling and Rate Control for XGP Global Mode includes Basic Scheduler Operation, Measurements to Support Scheduler Operation, Rate Control of GBR and UE-AMBR, CQI reporting for Scheduling and Explicit Congestion Notification.

Overview of Scheduling and Rate Control for XGP Global Mode is described in section 11 of [34].

When CA is configured, a UE may be scheduled over multiple serving cells simultaneously but at most one random access procedure shall be ongoing at any time. Cross-carrier scheduling with the Carrier Indicator Field (CIF) allows the PDCCH of a serving cell to schedule resources on another serving cell but with some restrictions. Overview of Scheduling and Rate Control with CA configured for XGP Global Mode is described in section 11.1 of [34].

To enable reasonable UE battery consumption when CA is configured, an activation/deactivation

mechanism of SCells is supported (i.e. activation/deactivation does not apply to PCell). Overview of activation/deactivation mechanism with CA configured for XGP Global Mode is described in section 11.2 of [34].

10.6.1.9 DRX in RRC_CONNECTED

DRX in RRC_CONNECTED for XGP Global Mode is in order to enable reasonable UE battery consumption.

Overview of DRX in RRC_CONNECTED for XGP Global Mode is described in section 12 of [34]. In CA, whenever a UE is configured with only one serving cell (i.e. PCell) Rel-8/9 DRX applies. In other cases, the same DRX operation applies to all configured and activated serving cells (i.e. identical active time for PDCCH monitoring). Overview of DRX in RRC_CONNECTED with CA configured for XGP Global Mode is described in section 12 of [34].

10.6.1.10 QoS

QoS for XGP Global Mode includes Bearer service architecture, QoS parameters and QoS support in Hybrid Cells.

Overview of QoS for XGP Global Mode is described in section 13 of [34].

10.6.1.11 Security

Security for XGP Global Mode includes Security termination points, State Transitions and Mobility, AS Key Change in RRC_CONNECTED and Security Interworking.

Overview of Security for XGP Global Mode is described in section 14 of [34].

10.6.1.12 Radio Resource Management aspects

Radio Resource management aspects for XGP Global Mode include RRM functions, RRM architecture and Load balancing control.

Overview of Radio Resource management aspects for XGP Global Mode is described in section 16 of [34].

In case of time domain ICIC, subframe utilization across different cells are coordinated in time through backhaul signalling or OAM configuration of so called Almost Blank Subframe patterns. The Almost Blank Subframes (ABSs) in an aggressor cell are used to protect resources in

subframes in the victim cell receiving strong inter-cell interference. Almost blank subframes are subframes with reduced transmit power (including no transmission) on some physical channels and/or reduced activity. Overview of Radio Resource management for time domain ICIC for XGP Global Mode is described in section 16.1.5 of [34].

10.6.1.13 Operation bands

Operation bands of BS and MS for XGP Global Mode are recommended as defined in section 5 of [27] and [28] respectively. Besides, the XGP Global Mode must support other operating bands defined by the operation country/region.

10.6.1.14 UE capabilities

Overview of UE capabilities for XGP Global Mode is described in section 18 of [34].

10.6.1.15 Support for self-configuration and self-optimisation

Support for self-configuration and self-optimisation for XGP Global Mode includes UE Support for self-configuration and self-optimisation, Self-configuration, Self-optimisation.

Details of Support for self-configuration and self-optimisation for XGP Global Mode are described in section 22 of [34].

10.6.1.16 Deployment Scenarios for CA

Table J.1-1 of [34] shows some of the potential deployment scenarios for CA. Overview of the potential CA deployment scenarios for XGP Global Mode is described in annex J.1 of [34].

10.6.2 Physical layer

10.6.2.1 General description

10.6.2.1.1 Relation to other layers

The physical layer interfaces the Medium Access Control (MAC) layer and the Radio Resource Control (RRC) Layer.

General protocol architecture around physical layer and service provided to higher layers for XGP Global Mode are described in section 4.1 of [29].

10.6.2.1.2 General description of Layer 1

General description of Layer 1 includes Multiple Access, Physical channels and modulation, Channel coding and interleaving, Physical layer procedures and physical layer measurements.

General description of layer 1 for XGP Global mode is described in section 4.2 of [29].

10.6.2.2 Frame Structure

Downlink and uplink transmissions are organized into radio frames with 10ms duration for XGP Global Mode. Each radio Frame of length 10ms consists of two half-frames of length 5ms each. Each half-frame consists of five subframes of length 1ms.

XGP Global Mode uses type 2 Frame Structure defined in section 4.2 of [30]. Among all the UL-DL configurations shown in Table 4.2-2 of [30], XGP Global Mode may be configured with UL-DL configuration 0, 1, 2 or 6. The Special subframe configuration of XGP Global Mode may be configuration 5 or 7 shown in Table 4.2-1 of [30].

10.6.2.3 Uplink Physical Channels and Modulation

10.6.2.3.1 Overview

An uplink physical channel corresponds to a set of resource elements carrying information originating from higher layers. Physical Uplink Shared Channel (PUSCH), Physical Uplink Control Channel (PUCCH) and Physical Random Access Channel (PRACH) are defined for XGP Global Mode.

An uplink physical signal is used by the physical layer but does not carry information originating from higher layers. Demodulation reference signal and Sounding reference signal are defined for XGP Global Mode.

Detailed overview of uplink physical channels and Physical signals are described in section 5.1 of [30].

10.6.2.3.2 Slot structure and physical resources

The transmitted signal in each slot is described by a resource grid of $N_{\mathrm{RB}}^{\mathrm{UL}} N_{\mathrm{sc}}^{\mathrm{RB}}$ subcarriers and $N_{\mathrm{symb}}^{\mathrm{UL}}$ SC-FDMA symbols. Each element in the resource grid is called a resource element. A

physical resource block is defined as $N_{\text{symb}}^{\text{UL}}$ consecutive SC-FDMA symbols in the time domain and $N_{\text{sc}}^{\text{RB}}$ consecutive subcarriers in the frequency domain

Details of Resource grid, Resource element and Resource block for XGP Global Mode are described in section 5.2 of [30].

10.6.2.3.3 Physical uplink shared channel

The baseband signal representing the physical uplink shared channel for XGP Global Mode is defined in terms of the following steps:

- Scrambling
- modulation of scrambled bits to generate complex-valued symbols
- Layer mapping

The complex-valued modulation symbols for each of the codewords to be transmitted are mapped onto one or two layers. Layer mapping for transmission on a single antenna port is the same as the previous releases. Layer mapping for spatial multiplexing is newly introduced to support enhanced UL MIMO (i.e. higher order UL MIMO).

- transform precoding to generate complex-valued symbols
- precoding of the complex-valued symbols

Precoding for spatial multiplexing is only used in combination with layer mapping for spatial multiplexing, which is newly introduced to support enhanced UL MIMO.

- mapping of precoded complex-valued symbols to resource elements
- generation of complex-valued time-domain SC-FDMA signal for each antenna port

The details of above steps are described in section 5.3 of [30].

10.6.2.3.4 Physical uplink control channel

The physical uplink control channel, PUCCH, carries uplink control information. PUCCH for XGP Global Mode is not transmitted in the UpPTS field.

The physical uplink control channel supports multiple formats, including PUCCH formats 1, 1a and 1b, PUCCH formats 2, 2a and 2b, and PUCCH format 3. PUCCH format 3 is newly

introduced in this release to support CA.

PUCCH formats 1, 1a and 1b are described in section 5.4.1 of [30]. PUCCH formats 2, 2a and 2b are described in section 5.4.2 of [30]. PUCCH format 3 is described in section 5.4.2A of [30]. PUCCH mapping to physical resources for XGP Global Mode is described in section 5.4.3 of [30].

10.6.2.3.5 Reference signals

Two types of UL reference signals are supported in XGP Global Mode.

- Demodulation reference signal (DMRS), associated with transmission of PUSCH or PUCCH;
- Sounding reference signal (SRS), not associated with transmission of PUSCH or PUCCH.

Details of Generation of the reference signal sequence, Demodulation reference signal and Sounding reference signal are described in section 5.5 of [30].

10.6.2.3.6 SC-FDMA baseband signal generation

SC-FDMA baseband signal generation of all uplink physical signals and physical channels except the physical random access channel are described in section 5.6 of [30] for XGP Global Mode.

10.6.2.3.7 Physical random access channel

Time and frequency structure of physical random access channel, preamble sequence generation and baseband signal generation for XGP Global Mode are described in section 5.7 of [30].

10.6.2.3.8 Modulation and upconversion

Modulation and upconversion to the carrier frequency of the complex-valued SC-FDMA baseband signal for each antenna port for XGP Global Mode is shown in section 5.8 of [30].

10.6.2.4 Downlink Physical Channels and Modulation

10.6.2.4.1 Overview

A downlink physical channel corresponds to a set of resource elements carrying information originating from higher layers. Physical Downlink Shared Channel (PDSCH), Physical Broadcast Channel (PBCH), Physical Multicast Channel (PMCH), Physical Control Format Indicator Channel (PCFICH), Physical Downlink Control Channel (PDCCH) and Physical Hybrid ARQ Indicator Channel (PHICH) are defined for XGP Global Mode.

A downlink physical signal corresponds to a set of resource elements used by the physical layer

but does not carry information originating from higher layers. Reference signals and Synchronization signal are defined for XGP Global Mode.

In this Global mode, a subset of the downlink subframes in a radio frame on a carrier supporting PDSCH transmission can be configured as MBSFN subframes by higher layers. This feature is for overhead reduction when enhanced DL MIMO technology is used. The details are described in section 6.1 of [30].

10.6.2.4.2 Slot structure and physical resource elements

The transmitted signal in each slot is described by a resource grid of $N_{\mathrm{RB}}^{\mathrm{DL}} N_{\mathrm{sc}}^{\mathrm{RB}}$ subcarriers and $N_{\mathrm{symb}}^{\mathrm{DL}}$ OFDM symbols. Each element in the resource grid is called a resource element. Resource blocks are used to describe the mapping of certain physical channels to resource elements. Physical and virtual resource blocks are defined. Resource-element groups are used for defining the mapping of control channels to resource elements.

Details of Resource grid, Resource elements, Resource blocks and Resource-element groups for XGP Global Mode are described in section 6.2 of [30].

10.6.2.4.3 General structure for downlink physical channels

The baseband signal representing a downlink physical channel is defined in terms of the following steps:

- scrambling of coded bits in each of the codewords to be transmitted on a physical channel;
- modulation of scrambled bits to generate complex-valued modulation symbols;
- mapping of the complex-valued modulation symbols onto one or several transmission layers;

5, 6, 7 and 8 layers are added for enhanced DL MIMO in this release of XGP Global Mode.

- precoding of the complex-valued modulation symbols on each layer for transmission on the antenna ports;

In this Global Mode, precoding for spatial multiplexing using antenna ports with UE-specific reference signals is only used in combination with layer mapping for spatial multiplexing. Spatial multiplexing using antenna ports with UE-specific reference signals supports up to eight antenna ports. Codebooks for 1~8 layer CSI reporting are newly introduced in this release of XGP Global Mode.

- mapping of complex-valued modulation symbols for each antenna port to resource elements;
- generation of complex-valued time-domain OFDM signal for each antenna port;

The details of above steps for XGP Global Mode are described in section 6.3 of [30].

10.6.2.4.4 Physical downlink shared channel

The physical downlink shared channel for XGP Global Mode shall be processed and mapped to resource elements as described in Section 6.3 of [30] with the exceptions stated in section 6.4 of [30].

10.6.2.4.5 Physical broadcast channel

Details of Scrambling, Modulation, Layer mapping and Precoding, Mapping to resource elements of a physical broadcast channel for XGP Global Mode are described in section 6.6 of [30].

10.6.2.4.6 Physical Multicast Channel

The physical multicast channel shall be processed and mapped to resource elements as described in Section 6.3 of [30] with the following exceptions stated in section 6.5 of [30].

10.6.2.4.7 Physical control format indicator channel

The physical control format indicator channel for XGP Global Mode carries information about the number of OFDM symbols used for transmission of PDCCHs in a subframe.

Details of Scrambling, Modulation, Layer mapping and Precoding, Mapping to resource elements of a physical control format indicator channel for XGP Global Mode are described in section 6.7 of [30].

10.6.2.4.8 Physical downlink control channel

The physical downlink control channel for XGP Global Mode carries scheduling assignments and other control information.

Details of PDCCH formats, PDCCH multiplexing and scrambling, Modulation, Layer mapping and precoding and Mapping to resource elements of a physical downlink control channel for XGP Global Mode are described in section 6.8 of [30].

10.6.2.4.9 Physical hybrid ARQ indicator channel

The PHICH for XGP Global Mode carries the hybrid-ARQ ACK/NACK.

Details of Modulation, Resource group alignment, layer mapping and precoding of PHICH for

XGP Global Mode are described in section 6.9 of [30].

10.6.2.4.10 Reference signals

Five types of downlink reference signals are defined for XGP Global Mode.

- Cell-specific reference signals (CRS)
- MBSFN reference signals
- UE-specific reference signals (DM-RS)
- Positioning reference signals (PRS)
- CSI reference signals (CSI-RS)

To support enhanced DL MIMO, compared with release 8/9, downlink reference signal structure has been enhanced by DM RS targeting PDSCH demodulation and CSI-RS targeting channel state information (CSI) estimation (for CQI/PMI/RI reporting when needed). DM RS for PDSCH demodulation is UE-specific, i.e. the PDSCH and the demodulation reference signals intended for a specific UE are subject to the same precoding operation. In contrast CSI-RS are cell specific, sparse in the frequency and time domain and punctured into the data region of normal subframes. CSI reference signals are transmitted on one, two, four or eight antenna ports.

Details of all above reference signals for XGP Global Mode are described in section 6.10 of [30].

10.6.2.4.11 Synchronization signals

Synchronization signals for XGP Global Mode include Primary synchronization signal and Secondary synchronization signal.

Details of sequence generation and Mapping to resource elements of Primary synchronization signal and Secondary synchronization signal for XGP Global Mode are described in section 6.11 of [30].

10.6.2.4.12 OFDM baseband signal generation

OFDM baseband signal generation for XGP Global Mode is described in section 6.12 of [30].

10.6.2.4.13 Modulation and upconversion

Modulation and upconversion to the carrier frequency of the downlink complex-valued OFDM baseband signal for XGP Global Mode are described in section 6.13 of [30].

10.6.2.5 Channel coding, multiplexing and interleaving

Channel coding scheme is a combination of error detection, error correcting, rate matching, interleaving and transport channel or control information mapping onto/splitting from physical channels.

10.6.2.5.1 Generic procedures

Generic coding procedures include CRC calculation, Code block segmentation and code block CRC attachment, Channel coding, Rate matching and Code block concatenation for XGP Global Mode.

Details of generic coding procedures for XGP Global Mode are described in section 5.1 of [31].

10.6.2.5.2 Uplink transport channels and control information

10.6.2.5.2.1 Uplink shared channel

Data arrives to the coding unit in the form of a maximum of two transport blocks every transmission time interval (TTI) per UL cell. The following coding steps can be identified for each transport block of an UL cell:

- Add CRC to the transport block
- Code block segmentation and code block CRC attachment
- Channel coding of data and control information
- Rate matching
- Code block concatenation
- Multiplexing of data and control information
- Channel interleaver

Details of coding steps of uplink shared channel for XGP Global Mode are described in section 5.2.2 of [31].

10.6.2.5.2.2 Uplink control information on PUCCH

Chanel coding procedures of uplink control information on PUCCH for XGP Global Mode include Channel coding for UCI HARQ-ACK, Channel coding for UCI scheduling request, Channel coding

for UCI channel quality information and Channel coding for UCI channel quality information and HARQ-ACK.

To support CA, channel coding for UCI HARQ-ACK carried on PUCCH format 3 is newly added in this release of XGP Global Mode.

Details of Chanel coding procedures of uplink control information on PUCCH for XGP Global Mode are described in section 5.2.3 of [31].

10.6.2.5.2.3 Uplink control information on PUSCH without UL-SCH data

When control data are sent via PUSCH without UL-SCH data, the following coding steps can be identified:

- Channel coding of control information
- Control information mapping
- Channel interleaver

Details of coding steps are described in section 5.2.4 of [31].

10.6.2.5.3 Downlink transport channels and control information

10.6.2.5.3.1 Broadcast channel

Data arrives to the coding unit in the form of a maximum of one transport block every transmission time interval (TTI) of 40ms. The following coding steps can be identified:

- Add CRC to transport block
- Channel coding
- Rate matching.

Details of coding steps of downlink broadcast channel for XGP Global Mode are described in section 5.3.1 of [31].

10.6.2.5.3.2 Downlink shared channel, Paging channel and Multicast channel

Data arrives to the coding unit in the form of a maximum of two transport blocks every transmission time interval (TTI) per DL cell. The following coding steps can be identified for each transport block of a DL cell:

- Add CRC to transport block
- Code block segmentation and code block CRC attachment
- Channel coding
- Rate matching
- Code block concatenation.

Details of coding steps of downlink shared channel, Paging channel and Multicast channel for XGP Global Mode are described in section 5.3.2 of [31].

10.6.2.5.3.3 Downlink control information

A DCI transports downlink or uplink scheduling information, requests for aperiodic CQI reports, notifications of MCCH change or uplink power control commands for one cell and one RNTI. Coding steps of DCI include Information element multiplexing, CRC attachment, Channel coding and Rate matching. Detailed of coding steps of DCI for XGP Global Mode are described in section 5.3.3 of [31].

To support different transmission modes or purposes, different DCI formats are defined, including DCI format 0, 1, 1A, 1B, 1C, 1D, 2, 2A, 2B, 2C, 3, 3A, 4. Format 2C and 4 are newly introduced in this release of XGP Global Mode to support enhanced DL and UL MIMO.

10.6.2.5.3.4 Control format indicator

Channel Coding of control format indicator for XGP Global Mode is described in section 5.3.4 of [31].

10.6.2.5.3.5 HARQ indicator (HI)

Channel Coding of HARQ indicator for XGP Global Mode is described in section 5.3.5 of [31].

10.6.2.6 Physical layer procedures

10.6.2.6.1 Synchronisation procedures

Synchronisation procedures for XGP Global Mode include Cell search, Timing synchronization (Radio link monitoring and Transmission timing adjustments), and Timing for Secondary Cell Activation / Deactivation. Timing for Secondary Cell Activation / Deactivation is defined for CA scenario.

Details of Synchronisation procedures for XGP Global Mode are described in section 4 of [32].

10.6.2.6.2 Power control

10.6.2.6.2.1 Uplink power control

Detailed power control of physical uplink shared channel, physical uplink control channel and Sounding Reference Symbol for XGP Global Mode are described in section 5.1 of [32].

10.6.2.6.2.2 Downlink power allocation

Downlink power allocation for XGP Global Mode is described in section 5.2 of [32].

10.6.2.6.3 Random access procedure

Random access procedure includes physical non-synchronized random access procedure and Random Access Response Grant.

Details of Random access procedure for XGP Global Mode is described in section 6 of [32].

10.6.2.6.4 Physical downlink shared channel related procedures

Physical downlink shared channel related procedures include UE procedure for receiving the physical downlink shared channel, UE procedure for reporting CSI and UE procedure for reporting HARQ-ACK/NACK.

10.6.2.6.4.1 UE procedure for receiving the physical downlink shared channel

There are 7 DL transmission schemes defined for XGP Global mode: single-antenna port scheme, Transmit diversity scheme, Large delay CDD scheme, Closed-loop spatial multiplexing scheme, Multi-user MIMO scheme, Dual layer transmission scheme and Up to 8 layer transmission scheme. The details are described in section 7.1.1, 7.1.2, 7.1.3, 7.1.4, 7.1.5, 7.1.5A and 7.1.5B of [32]. Up to 8 layer transmission scheme is introduced in this release of XGP Global Mode.

Three resource allocation (RA) types including two non-contiguous RA types and one contiguous RA type are described in section 7.1.6.1-7.1.6.3 of [32].

To support cross-carrier scheduling in CA scenario, PDSCH starting position can be configured by higher-layer signaling, which is described in section 7.1.6.4 of [32].

Modulation order and transport block size determination is described in section 7.1.6.5 of [32].

To support the UE configured with CA, storing soft channel bits are described in section 7.1.6.6 of

[32].

10.6.2.6.4.2 UE procedure for reporting Channel State Information (CSI)

UE procedures for reporting CQI/PMI/RI include aperiodic CQI/PMI/RI Reporting using PUSCH and periodic CQI/PMI/RI Reporting using PUCCH.

Details of UE procedures for reporting CQI/PMI/RI for XGP Global Mode are described in section 7.2 of [32].

Two CSI sets are defined for supporting eICIC, which is described in section 7.2.3 of [32].

10.6.2.6.4.3 UE procedure for reporting ACK/NACK

ACK/NACK bundling and ACK/NACK multiplexing are supported by higher layer configuration for XGP Global Mode. To support CA, new procedures for ACK/NACK multiplexing are introduced.

Details of UE procedure for reporting ACK/NACK for XGP Global Mode are described in section 7.3 of [32].

10.6.2.6.5 Physical uplink shared channel related procedures

Physical uplink shared channel related procedures for XGP Global Mode include Resource Allocation, UE sounding procedure, UE ACK/NACK procedure, UE PUSCH Hopping procedure, UE Reference Symbol procedure, Modulation order, redundancy version and transport block size determination and UE Transmit Antenna Selection.

There are two types of UL resource allocation, including contiguous RA and non-contiguous RA. Non-contiguous RA indicates to a scheduled UE two sets of resource blocks with each set including one or more consecutive resource block groups. Non-contiguous RA is newly introduced in this release of XGP Global Mode.

A UE shall transmit Sounding Reference Symbol (SRS) on per serving cell SRS resources based on two trigger types: Periodic trigger and Aperiodic trigger. Aperiodic trigger is newly introduced in this release of XGP Global Mode for enhanced UL MIMO.

Details of Physical uplink shared channel related procedures for XGP Global Mode are described in section 8 of [32].

10.6.2.6.6 Physical downlink control channel procedures

Physical downlink control channel procedures for XGP Global Mode include UE procedure for

determining PDCCH assignment, PHICH assignment, control format indicator (CFI) assignment and PDCCH validation for semi-persistent scheduling.
To support cross-carrier scheduling in CA scenario, new procedures for PDCCH assignment are introduced in this release of XGP Global Mode.

Details of physical downlink control channel procedures for XGP Global Mode are described in section 9 of [32].

10.6.2.6.7 Physical uplink control channel procedures

Physical uplink control channel procedures for XGP Global Mode include UE procedure for determining physical uplink control channel assignment and uplink ACK/NACK timing. New procedures for determining physical uplink control channel assignment are introduced in this release of XGP Global Mode to support CA

Details of physical uplink control channel procedures for XGP Global Mode are described in section 10 of [32].

10.6.2.7 Measurements

10.6.2.7.1 UE measurement capabilities

UE measurement capabilities for XGP Global Mode are defined in section 5.1 of [33].

10.6.2.7.2 E-UTRAN measurement abilities

E-UTRAN measurement abilities for XGP Global Mode are defined in section 5.2 of [33].

10.6.3 MAC layer – MSL1

10.6.3.1 General

10.6.3.1.1 MAC architecture

MAC architecture for XGP Global Mode is described in section 4.2 of [36].
In case of CA, if the UE is configured with one or more SCells, there are multiple DL-SCH and there may be multiple UL-SCH per UE; one DL-SCH and UL-SCH on the PCell, one DL-SCH and zero or one UL-SCH for each SCell. Detail of MAC architecture for XGP Global Mode is described in section 4.2.1 of [36].

10.6.3.1.2 Services

MAC layer services provided to upper layers and expected from physical layer for XGP Global Mode are described in section 4.3 of [36].

10.6.3.1.3 Functions

Functions supported by MAC layer for XGP Global Mode are described in section 4.4 of [36].

10.6.3.1.4 Channel structure

10.6.3.1.4.1 Transport Channels

The transport channels used by MAC layer for XGP Global Mode are described in section 4.5.1 of [36].

10.6.3.1.4.2 Logical Channels

The logical channels used by MAC layer for XGP Global Mode are described in section 4.5.2 of [36].

10.6.3.1.4.3 Mapping of Transport Channels to Logical Channels

Mapping of Transport Channels to logical channels for XGP Global Mode is described in section 4.5.3 of [36].

10.6.3.2 MAC procedures

10.6.3.2.1 Random Access procedure

Random Access procedure for XGP Global Mode includes Random Access Procedure initialization, Random Access Resource selection, Random Access Preamble transmission, Random Access Response reception, Contention Resolution and Completion of the Random Access procedure.

Details of Random Access procedure for XGP Global Mode are described in section 5.1 of [36].

10.6.3.2.2 Maintenance of Uplink Time Alignment

Maintenance of Uplink Time Alignment for XGP Global Mode is described in section 5.2 of [36].

10.6.3.2.3 DL-SCH data transfer

DL-SCH data transfer procedure for XGP Global Mode includes DL Assignment reception, HARQ operation, Disassembly and demultiplexing.

Details of DL-SCH data transfer for XGP Global Mode are described in section 5.3 of [36].

10.6.3.2.4 UL-SCH data transfer

UL-SCH data transfer procedure for XGP Global Mode includes UL Grant reception, HARQ operation, Multiplexing and assembly, Scheduling Request, Buffer Status Reporting and Power Headroom Reporting.

Details of UL-SCH data transfer for XGP Global Mode are described in section 5.4 of [36].
Details of Power Headroom Reporting of a UE that supports CA for XGP Global Mode are described in section 5.4.6 [36].

10.6.3.2.5 PCH reception

PCH reception procedure for XGP Global Mode is described in section 5.5 of [36].

10.6.3.2.6 BCH reception

BCH reception procedure for XGP Global Mode is described in section 5.6 of [36].

10.6.3.2.7 Discontinuous Reception (DRX)

Discontinuous Reception procedure for XGP Global Mode is described in section 5.7 of [36].

10.6.3.2.8 MAC reconfiguration

MAC reconfiguration procedure for XGP Global Mode is described in section 5.8 of [36].
In case of CA, details of MAC reconfiguration upon SCell addition/removal for XGP Global Mode are described in section 5.8 [36].

10.6.3.2.9 MAC Reset

MAC Reset procedure for XGP Global Mode is described in section 5.9 of [36].

10.6.3.2.10 Semi-Persistent Scheduling

Semi-Persistent Scheduling procedure for XGP Global Mode is described in section 5.10 of [36].
In case of CA, Semi-Persistent Scheduling is supported on the PCell only.

10.6.3.2.11 Activation/Deactivation of SCells

In case of CA, the network may activate and deactivate the configured SCells. The PCell is always activated. Details of Activation/Deactivation mechanism for XGP Global Mode are described in section 5.13 [36].

10.6.3.2.12 Handling of unknown, unforeseen and erroneous protocol data

Handling of unknown, unforeseen and erroneous MAC layer protocol data for XGP Global Mode is described in section 5.11 of [36].

10.6.3.3 Protocol Data Units, formats and parameters

10.6.3.3.1 Protocol Data Units

A MAC PDU is a bit string that is byte aligned in length. MAC PDU and MAC control elements for XGP Global Mode are described in section 6.1 of [36].

The Extended Power Headroom MAC control element for a UE that supports CA for XGP Global Mode are described in section 6.1.3.6a [36].

The Activation/Deactivation MAC control element for a UE that supports CA for XGP Global Mode are described in section 6.1.3.8 [36].

10.6.3.3.2 Formats and parameters

MAC header for DL-SCH and UL-SCH, MAC header for Random Access Response and MAC payload for Random Access Response are described in section 6.2 of [36].

10.6.3.4 Variables and constants

MAC layer variables and constants for XGP Global Mode include RNTI values, Backoff Parameter values, PRACH Mask Index values, Subframe_Offset values, TTI_BUNDLE_SIZE value, DELTA_PREAMBLE values and HARQ RTT Timer.

Details of MAC layer variables and constants for XGP Global Mode are described in section 7 of [36].

10.6.4 Radio Link Control (RLC) layer – MSL2

10.6.4.1 General

10.6.4.1.1 RLC architecture

Functions of the RLC layer are performed by RLC entities. An RLC entity can be configured to perform data transfer in one of the following three modes: Transparent Mode (TM), Unacknowledged Mode (UM) or Acknowledged Mode (AM).
Details of RLC architecture for XGP Global Mode are described in section 4.2 of [37].

10.6.4.1.2 Services

RLC layer services provided to upper layers and expected from lower layers are described in section 4.3 of [37].

10.6.4.1.3 Functions

Functions supported by RLC layer for XGP Global Mode are described in section 4.4 of [37].

10.6.4.1.4 Data available for transmission

Details of data available for transmission in the RLC layer for XGP Global Mode are described in section 4.5 of [37].

10.6.4.2 Procedures

10.6.4.2.1 Data transfer procedures

RLC layer Data transfer procedures for XGP Global Mode include TM data transfer, UM data transfer and AM data transfer.

Details of RLC layer data transfer procedures for XGP Global Mode are described in section 5.1 of [37].

10.6.4.2.2 ARQ procedures

ARQ procedures for XGP Global Mode include Retransmission, Polling and Status reporting.
Details of ARQ procedures for XGP Global Mode are described in section 5.2 of [37].

10.6.4.2.3 SDU discard procedures

SDU discard procedures for XGP Global Mode are described in section 5.3 of [37].

10.6.4.2.4 Re-establishment procedure

RLC layer Re-establishment procedure for XGP Global Mode is described in section 5.4 of [37].

10.6.4.2.5 Handling of unknown, unforeseen and erroneous protocol data

Handling of unknown, unforeseen and erroneous RLC layer protocol data for XGP Global Mode is described in section 5.5 of [37].

10.6.4.3 Protocol data units, formats and parameters

10.6.4.3.1 Protocol data units

RLC PDUs can be categorized into RLC data PDUs and RLC control PDUs.
Details of RLC data PDU and RLC control PDU for XGP Global Mode are described in section 6.1 of [37].

10.6.4.3.2 Formats and parameters

The formats and parameters of RLC PDUs for XGP Global Mode are described in section 6.2 of [37].

10.6.4.4 Variables, constants and timers

RLC layer variables, constants, timers and configurable parameters for XGP Global Mode are described in section 7 of [37].

10.6.5 Packet Data Convergence Protocol (PDCP) layer – MSL3

10.6.5.1 General

10.6.5.1.1 PDCP architecture

PDCP structure and PDCP entities for XGP Global Mode are described in section 4.2 of [38].

10.6.5.1.2 Services

PDCP layer services provided to upper layers and expected from physical layer for XGP Global

Mode are described in section 4.3 of [38].

10.6.5.1.3 Functions

PDCP layer supported functions for XGP Global Mode are described in section 4.4 of [38].

10.6.5.1.4 Data available for transmission

Details of data available for transmission in the PDCP layer for XGP Global Mode are described in section 4.5 of [38].

10.6.5.2 PDCP procedures

10.6.5.2.1 PDCP Data Transfer Procedures

UL PDCP Data Transfer Procedures and DL PDCP Data Transfer Procedures are described in section 5.1 of [38]

10.6.5.2.2 Re-establishment procedure

PDCP layer Re-establishment procedure for XGP Global Mode is described in section 5.2 of [38].

10.6.5.2.3 PDCP Status Report

PDCP Status Report procedure for XGP Global Mode are described in section 5.3 of [38].

10.6.5.2.4 PDCP discard

PDCP discard procedure for XGP Global Mode is described in section 5.4 of [38].

10.6.5.2.5 Header Compression and Decompression

PDCP layer Header Compression and Decompression procedures for XGP Global Mode are described in section 5.5 of [38].

10.6.5.2.6 Ciphering and Deciphering

PDCP layer Ciphering and Deciphering procedures for XGP Global Mode are described in section 5.6 of [38].

10.6.5.2.7 Integrity Protection and Verification

PDCP layer Integrity Protection and Verification procedures for XGP Global Mode are described in section 5.7 of [38].

10.6.5.2.8 Handling of unknown, unforeseen and erroneous protocol data

Handling of unknown, unforeseen and erroneous PDCP layer protocol data for XGP Global Mode is described in section 5.8 of [38].

10.6.5.3 Protocol data units, formats and parameters

10.6.5.3.1 Protocol data units

PDCP PDUs can be categorized into PDCP data PDUs and PDCP control PDUs.

Details of PDCP data PDU and PDCP control PDU for XGP Global Mode are described in section 6.1 of [38].

10.6.5.3.2 Formats

Different PDCP PDUs are supported for XGP Global Mode: Control plane PDCP Data PDU, User plane PDCP Data PDU with long PDCP SN , User plane PDCP Data PDU with short PDCP SN, PDCP Control PDU for interspersed ROHC feedback packet and PDCP Control PDU for PDCP status report.

Detailed formats of PDCP PDUs for XGP Global Mode are described in section 6.2 of [38].

10.6.5.3.3 Parameters

PDCP layer parameters for XGP Global Mode are described in section 6.3 of [38].

10.6.5.4 Variables, constants and timers

PDCP layer variables, constants and timers for XGP Global Mode are described in section 7 of [38].

10.6.6 Radio Resource Control (RRC) layer

10.6.6.1 General

10.6.6.1.1 Architecture

RRC layer architecture for XGP Global Mode is described in section 4.2 of [39].

10.6.6.1.2 Services

RRC services provided to upper layers and expected from lower layers for XGP Global Mode are described in section 4.3 of [39].

10.6.6.1.3 Functions

RRC layer supported functions for XGP Global Mode are described in section 4.4 of [39].

10.6.6.2 Procedures

10.6.6.2.1 General

General RRC requirements for XGP Global Mode are described in section 5.1 of [39].

10.6.6.2.2 System information

10.6.6.2.2.1 Introduction

System information is divided into the MasterInformationBlock (MIB) and a number of SystemInformationBlocks (SIBs).

Scheduling of System information, System information validity and notification of changes, Indication of ETWS notification and Indication of CMAS notification for XGP Global Mode are described in section 5.2.1 of [39].

10.6.6.2.2.2 System information acquisition

System information acquisition for XGP Global Mode is described in section 5.2.2 of [39].

10.6.6.2.2.3 Acquisition of an SI message

Acquisition of an SI message for XGP Global Mode is described in section 5.2.3 of [39].

10.6.6.2.3 Connection control

10.6.6.2.3.1 Introduction

RRC connection control procedures include RRC connection control, Security and Connected mode mobility.

Overview of connection control procedure is described in section 5.3.1 of [39].

10.6.6.2.3.2 Paging

Paging initiation procedure and Reception procedure of the Paging message by the UE for XGP Global Mode are described in [35] and section 5.3.2 of [39].

10.6.6.2.3.3 RRC connection establishment

RRC connection establishment procedures for XGP Global Mode include Initiation, Actions related to transmission of RRC Connection Request message, Reception of the RRC Connection establishment related messages, Cell re-selection, Timer expiry, Abortion of RRC connection establishment and Handling of SSAC related parameters.

RRC connection establishment procedure for XGP Global Mode is described in section 5.3.3 of [39].

10.6.6.2.3.4 Initial security activation

Initial security activation procedure for XGP Global Mode is described in section 5.3.4 of [39].

10.6.6.2.3.5 RRC connection reconfiguration

RRC connection reconfiguration procedures include Initiation procedure, Reception of RRC Connection Reconfiguration related message, Reconfiguration failure procedure, Timer expiry procedure, etc.

RRC connection reconfiguration procedures for XGP Global Mode are described in section 5.3.5 of [39].

A UE that supports CA, may be configured with one or more SCells in addition to the PCell that was initially configured during connection establishment. Details of RRC connection reconfiguration procedures of a UE that supports CA for XGP Global Mode are described in section 5.3.1 [39].

10.6.6.2.3.6 Counter check

Counter check procedures include Initiation procedure and Reception of the Counter Check message procedure.

Counter check procedures for XGP Global Mode are described in section 5.3.6 of [39].

10.6.6.2.3.7 RRC connection re-establishment

RRC connection re-establishment procedures include Initiation procedure, reception of the RRC Connection Re-establishment related messages, Timer expiry procedure and etc.

RRC connection re-establishment procedures for XGP Global Mode are described in section 5.3.7 of [39].

10.6.6.2.3.8 RRC connection release

RRC connection release procedures include Initiation procedure, Reception of the RRC Connection Release message and Timer expiry procedure.

RRC connection release procedures for XGP Global Mode are described in section 5.3.8 of [39].

10.6.6.2.3.9 RRC connection release requested by upper layers

RRC connection release requested by upper layers for XGP Global Mode is described in section 5.3.9 of [39].

10.6.6.2.3.10 Radio resource configuration

Radio resource configuration procedures include SRB addition/ modification/ release, MAC main reconfiguration, Semi-persistent scheduling reconfiguration, Physical channel reconfiguration and Radio Link Failure Timers and Constants reconfiguration.
Radio resource configuration procedures for XGP Global Mode are described in section 5.3.10 of [39].
Cell management for a UE that supports CA including e.g. addition/ modification/ release of SCell(s), details of Cell management procedures for XGP Global Mode are described in section 5.3.10.3a, 5.3.10.3b [39].

For the UE configurations for Time-domain ICIC to measure "protected" resources of the serving cell, RRM/RLM measurement resource restriction is signalled to the UE. Details of time domain measurement resource restriction for serving cell for XGP Global Mode are described in section 5.3.10.8 [39].

10.6.6.2.3.11 Radio link failure related actions

Radio link failure related actions include Detection of physical layer problems in RRC_CONNECTED, Recovery of physical layer problems and Detection of radio link failure.
Radio link failure related actions for XGP Global Mode are described in section 5.3.11 of [39].

The measurements are based on the time domain measurement resource restriction, if configured.

10.6.6.2.3.12 UE actions upon leaving RRC_CONNECTED

UE actions upon leaving RRC_CONNECTED for XGP Global Mode is described in section 5.3.12 of [39].

10.6.6.2.3.13 UE actions upon PUCCH/ SRS release request

UE actions upon PUCCH/ SRS release request for XGP Global Mode is described in section 5.3.13 of [39].

10.6.6.2.3.14 Proximity indication

Initiation and Actions related to transmission of Proximity indication message for XGP Global Mode are described in section 5.3.14 of [39].

10.6.6.2.4 Inter-RAT mobility

Inter-RAT mobility procedures include Handover to E-UTRA procedure, Mobility from E-UTRA procedure and Inter-RAT cell change order to E-UTRAN.
Inter-RAT mobility procedures for XGP Global Mode are described in section 5.4 of [39].

10.6.6.2.5 Measurements

Measurements for XGP Global Mode include Measurement configuration, performing measurements, Measurement report triggering, Measurement reporting and Measurement related actions.
Measurements for XGP Global Mode are described in section 5.5 of [39].
When CA is configured, the "current cell" above refers to any serving cell of the configured set of serving cells. And Event A5 and Event A6 had been introduced for CA configured UE. Detail of mobility with CA configured for XGP Global Mode is described in section 5.5 of [39].

For the UE to measure "protected" resources to measure "protected" resources of serving cell and/or neighbour cells, RRM measurement resource restriction is signalled to the UE. Details of time domain measurement resource restriction for RRM measurement for XGP Global Mode are described in section 5.5 [39].

10.6.6.2.6 Other procedures

DL and UL information transfer, UE capability transfer and UE information request procedures are described in section 5.6 of [39]. Generic RRC layer error handling for XGP Global Mode is described in section 5.7 of [39].

10.6.6.3 Protocol data units, formats and parameters

10.6.6.3.1 RRC messages

General RRC message structure and RRC Message definitions for XGP Global Mode are described in section 6.2 of [39].

10.6.6.3.2 RRC information elements

RRC information elements include System information blocks, Radio resource control information elements, Security control information elements, Mobility control information elements, Measurement information elements and other information elements.
RRC information elements for XGP Global Mode are described in section 6.3 of [39].

10.6.6.3.3 RRC multiplicity and type constraint values

RRC multiplicity and type constraint values for XGP Global Mode is described in section 6.4 of [39].

10.6.6.4 Variables and constants

RRC layer UE variables, Counters, Timers and Constants for XGP Global Mode are described in section 7 of [39].

10.6.6.5 Protocol data unit abstract syntax

Structure of encoded RRC messages, Basic production, extension and Padding for XGP Global Mode are described in section 8 of [39].

10.6.6.6 Specified and default radio configurations

10.6.6.6.1 Specified configurations

Logical channel configurations and specified SRB configurations for XGP Global Mode are described in section 9.1 of [39].

10.6.6.6.2 Default radio configurations

Default SRB configurations, Default MAC main configuration, Default semi-persistent scheduling configuration, Default physical channel configuration and Default values timers and constants are described in section 9.2 of [39].

10.6.6.7 Radio information related interactions between network nodes

Radio information related interactions between network nodes include Inter-node RRC messages, Inter-node RRC information element definitions, Inter-node RRC multiplicity and type constraint values and Mandatory information in AS-Config.

Radio information related interactions between network nodes for XGP Global Mode are described in section 10 of [39].

10.6.6.8 UE capability related constraints and performance requirements

UE capability related constraints and Processing delay requirements for RRC procedures are described in section 11 of [39].

10.7 Specification - referring to “Release 11 of 3GPP”

References:

Release 11 of 3GPP technical specifications that XGP Global Mode refers to are listed below:

[40]. TS 36.101 http://www.3gpp.org/ftp/Specs/archive/36_series/36.101/36101-b60.zip, Evolved Universal Terrestrial Radio Access (E-UTRA); User Equipment (UE) radio transmission and reception, < V11.6.0 (2013-09)>

[41].TS 36.104 http://www.3gpp.org/ftp/Specs/archive/36_series/36.104/36104-b60.zip, Evolved Universal Terrestrial Radio Access (E-UTRA); Base Station (BS) radio transmission and reception, < V11.6.0 (2013-09)>

[42]. TS 36.201 http://www.3gpp.org/ftp/Specs/archive/36_series/36.201/36201-b10.zip,

Evolved Universal Terrestrial Radio Access (E-UTRA); LTE physical layer; General description, < V11.1.0 (2012-12)>

[43]. TS 36.211 http://www.3gpp.org/ftp/Specs/archive/36_series/36.211/36211-b40.zip, Evolved Universal Terrestrial Radio Access (E-UTRA); Physical channels and modulation, < V11.4.0 (2013-09)>

[44]. TS 36.212 http://www.3gpp.org/ftp/Specs/archive/36_series/36.212/36212-b30.zip, Evolved Universal Terrestrial Radio Access (E-UTRA); Multiplexing and channel coding, < V11.3.0 (2013-06)>

[45]. TS 36.213 http://www.3gpp.org/ftp/Specs/archive/36_series/36.213/36213-b40.zip, Evolved Universal Terrestrial Radio Access (E-UTRA); Physical layer procedures, < V11.4.0 (2013-09)>

[46]. TS 36.214 http://www.3gpp.org/ftp/Specs/archive/36_series/36.214/36214-b10.zip, Evolved Universal Terrestrial Radio Access (E-UTRA); Physical layer; Measurements, < V11.1.0 (2012-12)>

[47]. TS 36.300 http://www.3gpp.org/ftp/Specs/archive/36_series/36.300/36300-b70.zip, Evolved Universal Terrestrial Radio Access (E-UTRA) and Evolved Universal Terrestrial Radio Access Network (E-UTRAN); Overall description; Stage 2, <Ver 11.7.0 (2013-09)>

[48] TS 36.304 http://www.3gpp.org/ftp/Specs/archive/36_series/36.304/36304-b50.zip, Evolved Universal Terrestrial Radio Access (E-UTRA); User Equipment (UE) procedures in idle mode, <Ver 11.5.0 (2013-09)>

[49]. TS 36.321 http://www.3gpp.org/ftp/Specs/archive/36_series/36.321/36321-b30.zip, Evolved Universal Terrestrial Radio Access (E-UTRA); Medium Access Control (MAC) protocol specification, <Ver 11.3.0 (2013-107)>

[50]. TS 36.322 http://www.3gpp.org/ftp/Specs/archive/36_series/36.322/36322-b00.zip, Evolved Universal Terrestrial Radio Access (E-UTRA); Radio Link Control (RLC) protocol specification, <Ver 11.0.0 (2012-09)>

[51]. TS 36.323 http://www.3gpp.org/ftp/Specs/archive/36_series/36.323/36323-b20.zip, Evolved Universal Terrestrial Radio Access (E-UTRA); Packet Data Convergence Protocol (PDCP) specification, <Ver 11.2.0 (2013-03)>

[52].TS 36.331 http://www.3gpp.org/ftp/Specs/archive/36_series/36.331/36331-b50.zip, Evolved Universal Terrestrial Radio Access (E-UTRA); Radio Resource Control (RRC); Protocol specification, <Ver 11.5.0 (2013-09)>

Note: The version number of 3GPP specification document can be read as the latest one in the same release if the document number is updated.

10.7.1 Overview

10.7.1.1 Overall architecture

XGP Global Mode is assumed to be operated in the system that consists of MS, BS and Relay Station (RS) which relays communications between BS and MS.

MS is called as User Equipment (UE) and BS is called as E-UTRAN NodeB (eNB) while RS is called as Relay Node (RN) in the reference document.

Overview of Functional Split, Interfaces, Radio Protocol architecture, Synchronization and IP fragmentation for XGP Global Mode is described in section 4 of [47].

Release 11 of 3GPP extends the features of Release 8, 9 and 10 as a supplementation and improvement of IMT-Advanced. New features in 3GPP Release 11 include Coordinated Multi-Point (CoMP) transmission and reception, Enhanced downlink control channel, Carrier Aggregation Enhancement, Further Enhanced Non CA-based ICIC, Network-Based Positioning Support, Service continuity improvements for MBMS, eDDA, MDT enhancements, Energy Saving function for Inter-RAT scenario, HeNB Mobility enhancement, MMSE-Interference Rejection Combining (MMSE-IRC), and SON enhancement on inter-RAT MRO.

- Coordinated Multi-Point (CoMP) transmission and reception

Coordinated Multi-Point (CoMP) transmission and reception is supported in Release 11 as a tool to improve the coverage of high data rates, the cell-edge throughput, and also to increase system throughput.

Intra-site and inter-site downlink CoMP, and UL CoMP are supported for homogenous and heterogeneous configurations.

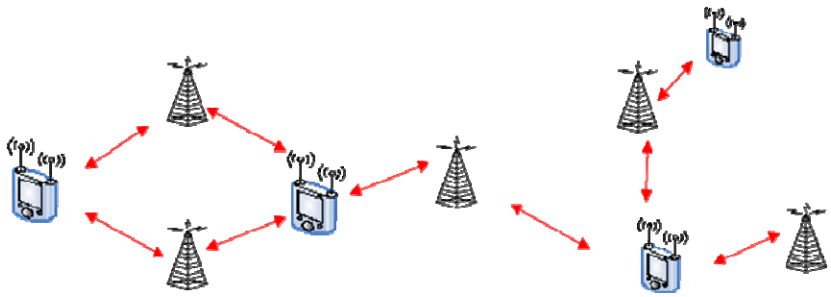

Figure 10.7.1.1-1 CoMP

- Enhanced downlink control channel (EPDCCH)

EPDCCH is introduced in Release 11 to support increased control channel capacity, to achieve improved spatial reuse of control channel resource, to support beamforming and/or diversity. It is also desirable for the enhanced physical downlink control channel to be able to be scheduled frequency-selectively, and to be able to mitigate inter-cell interference.

EPDCCH carries UE-specific signalling. EPDCCHs are formed by aggregation of enhanced control channel elements, each enhanced control channel element consisting of a set of resource elements. Different code rates for EPDCCHs are realized by aggregating different numbers of enhanced control channel elements. An EPDCCH can use either localized or distributed transmission, differing in the mapping of enhanced control channel elements to the resource elements in the PRBs.

- Carrier Aggregation Enhancement

Carrier Aggregation Enhancement in Release 11 includes the support of the use of multiple timing advances in case of LTE uplink carrier aggregation and inter-band carrier aggregation for TDD DL and UL including different uplink-downlink configurations on different bands.

- Further Enhanced Non CA-based ICIC(FeICIC)

FeICIC in Release 11 includes eNB signalling to enable significantly improved detection of system information block 1(SIB-1), and RRC signaling indicating the presence of dominant interferers from CRS. In addition, FeICIC capable UEs could have PBCH interference cancellation capability or an implementation with equivalent or better demodulation performance than PBCH IC.

- Network-Based Positioning Support

UTDOA (Uplink Time Difference of Arrival) in LTE based only on Sounding Reference Signals (SRSs) are supported in Release 11. The interface and signalling support between UTDOA measurement units and between UTDOA measurement units and the E-SMLC (Enhanced-Serving Mobile Location Centre), procedures for UTDOA measurement triggering, measurement configuration, assistance data transfer, and measurement report transfer are specified.

- Service continuity improvements for MBMS

Continuity of the service(s) provided by MBSFN in deployment scenarios involving one or more frequencies is supported in Release 11. The UE can be enabled to receive the desired MBMS service(s) in RRC Idle mode and the network can be enabled to provide continuity of the desired

MBMS service(s) reception in RRC Connected mode.

- Enhancement for Diverse Data Applications (eDDA)

Enhancement for Diverse Data Applications (eDDA) in Release 11 is a feature to enhance the ability of LTE to handle diverse traffic profiles. The identified improvements will allow for better trade-offs to be achieved when balancing the needs of network efficiency, UE battery life, signalling overheads, and user experience/system performance.

- Minimization of Driving Test(MDT) enhancements

MDT enhancements include increasing the availability of detailed location information when MDT measurement is taken/collected. Extending already defined options for MDT positioning and Multi-PLMN RLF report are supported in Release 11 to improve MDT.

- Energy Saving function for Inter-RAT scenario

The energy saving function for inter-RAT scenario is supported in Release11. The eNB indicates the re-activation action to a UTRAN node by means of the eNB Direct Information Transfer procedure over S1.

- HeNB(Home eNB) Mobility enhancement

Enhanced mobility between macro–hybrid HeNB, open HeNB–hybrid HeNB, and hybrid HeNB–hybrid HeNB (inter-CSG) are supported in Release 11. X2-based HO involving HeNBs is allowed.

- MMSE-Interference Rejection Combining (MMSE-IRC)

Demodulation capability for inter-cell interference suppression receiver based on MMSE-IRC is supported in Release 11. System performance gain could be envisioned by UE receiver enhancements. Particularly, mitigating inter-cell interference at the UE receiver would be desired to improve cell edge user throughput.

- SON enhancement on inter-RAT Mobility Robustness Optimization (MRO)

Mobility Robustness Optimization (MRO) is supported to detect connection failures that occured due to Too Early or Too Late inter-RAT handovers in Release 11.

10.7.1.2 Physical layer – Layer 1

Layer 1 for XGP Global Mode is Physical layer.

Overview of Downlink Transmission Scheme, Uplink Transmission Scheme, Transport Channels and E-UTRAN physical layer model for XGP Global Mode is described in section 5 of [47]. In details, CoMP transmission and reception is described in section 5.1.9 and 5.2.8 of [47], Enhanced downlink control channel is described in section 5.1.3 of [47], Carrier Aggregation Enhancement is described in section 5.5 of [47].

10.7.1.3 MAC, RLC, and PDCP layers - Layer 2

Layer 2 for XGP Global Mode consists of MAC layer, RLC layer, PDCP layer. The Medium Access Control (MAC) layer in section 10.7 is referred to as the MAC sub-layer1 (MSL1) in the XGP Global Mode protocol structure in section 10.4. And, so does Radio Link Control (RLC) layer as MAC sub-layer2 (MSL2), and Packet Data Convergence Protocol (PDCP) layer as MAC sub-layer3 (MSL3).

Overview of layer 2 for XGP Global Mode is described in section 6 of [47].

10.7.1.4 RRC layer – Layer 3

Radio Resource Control (RRC) in section 10.7 is referred to as the Radio connection in XGP Global Mode protocol structure in section 10.4.

Overview of RRC layer for XGP Global Mode is described in section 7 of [47] which specifies Services and Functions, RRC protocol states & state transitions, Transport of NAS messages and System Information.

10.7.1.5 E-UTRAN identities

E-UTRAN identities include E-UTRAN related UE identities and Network entity related Identities. Overview of E-UTRAN identities for XGP Global Mode is described in section 8 of [47].

10.7.1.6 ARQ and HARQ

Overview of HARQ principles and ARQ principles for XGP Global Mode is described in section 9 of [47].

10.7.1.7 Mobility

Mobility for XGP Global Mode includes Intra E-UTRAN, Inter RAT, Mobility between E-UTRAN and Non-3GPP radio technologies, Area Restrictions, Mobility to and from CSG and Hybrid cells,

Measurement Model and Hybrid Cells.

Overview of mobility for XGP Global Mode is described in section 10 of [47].

10.7.1.8 Scheduling and Rate Control

Scheduling and Rate Control for XGP Global Mode includes Basic Scheduler Operation, Measurements to Support Scheduler Operation, Rate Control of GBR and UE-AMBR, CQI reporting for Scheduling and Explicit Congestion Notification.

Overview of Scheduling and Rate Control for XGP Global Mode is described in section 11 of [47].

10.7.1.9 DRX in RRC_CONNECTED

DRX in RRC_CONNECTED for XGP Global Mode is in order to enable reasonable UE battery consumption.

Overview of DRX in RRC_CONNECTED for XGP Global Mode is described in section 12 of [47].

10.7.1.10 QoS

QoS for XGP Global Mode includes Bearer service architecture, QoS parameters and QoS support in Hybrid Cells.

Overview of QoS for XGP Global Mode is described in section 13 of [47].

10.7.1.11 Security

Security for XGP Global Mode includes Security termination points, State Transitions and Mobility, AS Key Change in RRC_CONNECTED and Security Interworking.

Overview of Security for XGP Global Mode is described in section 14 of [47].

10.7.1.12 Service continuity for MBMS

Mobility procedures for MBMS reception allow the UE to start or continue receiving MBMS service(s) via MBSFN when changing cell(s).

Overview of Service continuity for MBMS is described in section 15.4 of [47].

10.7.1.13 Radio Resource Management aspects

Radio Resource management aspects for XGP Global Mode include RRM functions, RRM architecture and Load balancing control.

Overview of Radio Resource management aspects for XGP Global Mode is described in section 16 of [47]. In details, Further Enhanced Non CA-based ICIC is described in section 16.1.5 of [47].

10.7.1.14 Operation bands

Operation bands of BS and MS for XGP Global Mode are recommended as defined in section 5 of [40] and [41] respectively. Besides, the XGP Global Mode must support other operating bands defined by the operation country/region.

10.7.1.15 UE capabilities

Overview of UE capabilities for XGP Global Mode is described in section 18 of [47].

In order to support MMSE-Interference Rejection Combining (MMSE-IRC), detailed UE performance requirements are described in section 8 of [40].

10.7.1.16 Support for self-configuration and self-optimisation

Support for self-configuration and self-optimisation for XGP Global Mode includes UE Support for self-configuration and self-optimisation, Self-configuration, Self-optimisation.

Details of Support for self-configuration and self-optimisation for XGP Global Mode are described in section 22 of [47]. SON enhancement on inter-RAT MRO is described in 22.4.2.2a of [47]. Energy Saving function for Inter-RAT scenario is described in section 22.4.4 of [47].

10.7.1.17 Deployment Scenarios for CA

Table J.1-1 of [47] shows some of the potential deployment scenarios for CA. Overview of the potential CA deployment scenarios for XGP Global Mode is described in annex J.1 of [47].

10.7.2 Physical layer

10.7.2.1 General description

10.7.2.1.1 Relation to other layers

The physical layer interfaces the Medium Access Control (MAC) layer and the Radio Resource Control (RRC) Layer.

General protocol architecture around physical layer and service provided to higher layers for XGP Global Mode are described in section 4.1 of [42].

10.7.2.1.2 General description of Layer 1

General description of Layer 1 includes Multiple Access, Physical channels and modulation, Channel coding and interleaving, Physical layer procedures and physical layer measurements.

General description of layer 1 for XGP Global mode is described in section 4.2 of [42]. In details, General description of CoMP transmission and reception is described in section 4.2.1 of [42].

10.7.2.2 Frame Structure

Downlink and uplink transmissions are organized into radio frames with 10ms duration for XGP Global Mode. Each radio Frame of length 10ms consists of two half-frames of length 5ms each. Each half-frame consists of five subframes of length 1ms.

XGP Global Mode uses type 2 Frame Structure defined in section 4.2 of [43]. Among all the UL-DL configurations shown in Table 4.2-2 of [43], XGP Global Mode may be configured with UL-DL configuration 0, 1, 2 or 6. The Special subframe configuration of XGP Global Mode may be configuration 5 or 7 shown in Table 4.2-1 of [43].

10.7.2.3 Uplink Physical Channels and Modulation

10.7.2.3.1 Overview

An uplink physical channel corresponds to a set of resource elements carrying information originating from higher layers. Physical Uplink Shared Channel (PUSCH), Physical Uplink Control Channel (PUCCH) and Physical Random Access Channel (PRACH) are defined for XGP Global Mode.

An uplink physical signal is used by the physical layer but does not carry information originating from higher layers. Demodulation reference signal and Sounding reference signal are defined for XGP Global Mode.

Detailed overview of uplink physical channels and Physical signals are described in section 5.1 of [43].

10.7.2.3.2 Slot structure and physical resources

The transmitted signal in each slot is described by a resource grid of $N_{\mathrm{RB}}^{\mathrm{UL}} N_{\mathrm{sc}}^{\mathrm{RB}}$ subcarriers and $N_{\mathrm{symb}}^{\mathrm{UL}}$ SC-FDMA symbols. Each element in the resource grid is called a resource element. A physical resource block is defined as $N_{\mathrm{symb}}^{\mathrm{UL}}$ consecutive SC-FDMA symbols in the time domain and $N_{\mathrm{sc}}^{\mathrm{RB}}$ consecutive subcarriers in the frequency domain

Details of Resource grid, Resource element and Resource block for XGP Global Mode are described in section 5.2 of [43].

10.7.2.3.3 Physical uplink shared channel

The baseband signal representing the physical uplink shared channel for XGP Global Mode is defined in terms of the following steps:

- Scrambling
- modulation of scrambled bits to generate complex-valued symbols
- Layer mapping
- transform precoding to generate complex-valued symbols
- precoding of the complex-valued symbols
- mapping of precoded complex-valued symbols to resource elements
- generation of complex-valued time-domain SC-FDMA signal for each antenna port

The details of above steps are described in section 5.3 of [43].

10.7.2.3.4 Physical uplink control channel

The physical uplink control channel, PUCCH, carries uplink control information. PUCCH for XGP Global Mode is not transmitted in the UpPTS field.

The physical uplink control channel supports multiple formats as shown in Table 5.4-1 of [43].

Details of PUCCH formats 1, 1a, 1b, PUCCH formats 2, 2a, 2b and PUCCH format 3, and Mapping to physical resources for XGP Global Mode are described in section 5.4 of [43].

10.7.2.3.5 Reference signals

Two types of UL reference signals are supported in XGP Global Mode.

- Demodulation reference signal (DMRS), associated with transmission of PUSCH or PUCCH;
- Sounding reference signal (SRS), not associated with transmission of PUSCH or PUCCH.

Details of Generation of the reference signal sequence, Demodulation reference signal and Sounding reference signal are described in section 5.5 of [43].

10.7.2.3.6 SC-FDMA baseband signal generation

SC-FDMA baseband signal generation of all uplink physical signals and physical channels except the physical random access channel are described in section 5.6 of [43] for XGP Global Mode.

10.7.2.3.7 Physical random access channel

Time and frequency structure of physical random access channel, preamble sequence generation and baseband signal generation for XGP Global Mode are described in section 5.7 of [43].

10.7.2.3.8 Modulation and upconversion

Modulation and upconversion to the carrier frequency of the complex-valued SC-FDMA baseband signal for each antenna port for XGP Global Mode is shown in section 5.8 of [43].

10.7.2.4 Downlink Physical Channels and Modulation

10.7.2.4.1 Overview

A downlink physical channel corresponds to a set of resource elements carrying information originating from higher layers. Physical Downlink Shared Channel (PDSCH), Physical Broadcast Channel (PBCH), Physical Multicast Channel (PMCH), Physical Control Format Indicator Channel

(PCFICH), Physical Downlink Control Channel (PDCCH), Physical Hybrid ARQ Indicator Channel (PHICH), and Enhanced Physical Downlink Control Channel (EPDCCH) are defined for XGP Global Mode.

A downlink physical signal corresponds to a set of resource elements used by the physical layer but does not carry information originating from higher layers. Reference signals and Synchronization signal are defined for XGP Global Mode.

The details are described in section 6.1 of [43].

10.7.2.4.2 Slot structure and physical resource elements

The transmitted signal in each slot is described by a resource grid of $N_{\mathrm{RB}}^{\mathrm{DL}} N_{\mathrm{sc}}^{\mathrm{RB}}$ subcarriers and $N_{\mathrm{symb}}^{\mathrm{DL}}$ OFDM symbols. Each element in the resource grid is called a resource element. Resource blocks are used to describe the mapping of certain physical channels to resource elements. Physical and virtual resource blocks are defined. Resource-element groups (REG) are used for defining the mapping of control channels to resource elements.

Enhanced Resource-Element Groups (EREGs) are used for defining the mapping of enhanced control channels to resource elements. There are 16 EREGs, numbered from 0 to 15, per physical resource block pair.

Details of Resource grid, Resource elements, Resource blocks, Resource-element groups and Enhanced Resource-Element Groups (EREGs) for XGP Global Mode are described in section 6.2 of [43].

10.7.2.4.3 General structure for downlink physical channels

The baseband signal representing a downlink physical channel is defined in terms of the following steps:

- scrambling of coded bits in each of the codewords to be transmitted on a physical channel;
- modulation of scrambled bits to generate complex-valued modulation symbols;
- mapping of the complex-valued modulation symbols onto one or several transmission layers;
- precoding of the complex-valued modulation symbols on each layer for transmission on the antenna ports;

- mapping of complex-valued modulation symbols for each antenna port to resource elements;
- generation of complex-valued time-domain OFDM signal for each antenna port;

The details of above steps for XGP Global Mode are described in section 6.3 of [43].

10.7.2.4.4 Physical downlink shared channel

The physical downlink shared channel for XGP Global Mode shall be processed and mapped to resource elements as described in Section 6.3 of [43] with the exceptions stated in section 6.4 of [43].

10.7.2.4.5 Physical broadcast channel

Details of Scrambling, Modulation, Layer mapping and Precoding, Mapping to resource elements of a physical broadcast channel for XGP Global Mode are described in section 6.6 of [43].

10.7.2.4.6 Physical Multicast Channel

The physical multicast channel shall be processed and mapped to resource elements as described in Section 6.3 of [43] with the following exceptions stated in section 6.5 of [43].

10.7.2.4.7 Physical control format indicator channel

The physical control format indicator channel for XGP Global Mode carries information about the number of OFDM symbols used for transmission of PDCCHs in a subframe.

Details of Scrambling, Modulation, Layer mapping and Precoding, Mapping to resource elements of a physical control format indicator channel for XGP Global Mode are described in section 6.7 of [43].

10.7.2.4.8 Physical downlink control channel

The physical downlink control channel for XGP Global Mode carries scheduling assignments and other control information.

Details of PDCCH formats, PDCCH multiplexing and scrambling, Modulation, Layer mapping and precoding and Mapping to resource elements of a physical downlink control channel for XGP Global Mode are described in section 6.8 of [43].

10.7.2.4.9 Enhanced physical downlink control channel

The enhanced physical downlink control channel (EPDCCH) carries scheduling assignments. An

enhanced physical downlink control channel is transmitted using an aggregation of one or several consecutive enhanced control channel elements (ECCEs) where each ECCE consists of multiple enhanced resource element groups (EREGs). An EPDCCH can use either localized or distributed transmission, differing in the mapping of ECCEs to EREGs and PRB pairs.

Details of EPDCCH formats, EPDCCH multiplexing and scrambling, Modulation, Layer mapping and precoding and Mapping to resource elements of an enhanced physical downlink control channel for XGP Global Mode are described in section 6.8A of [43].

10.7.2.4.10 Physical hybrid ARQ indicator channel

The PHICH for XGP Global Mode carries the hybrid-ARQ ACK/NACK.

Details of Modulation, Resource group alignment, layer mapping and precoding of PHICH for XGP Global Mode are described in section 6.9 of [43].

10.7.2.4.11 Reference signals

Six types of downlink reference signals are defined for XGP Global Mode.

- Cell-specific Reference Signal (CRS)
- MBSFN reference signal
- UE-specific Reference Signal (DM-RS) associated with PDSCH
- DeModulation Reference Signal (DM-RS) associated with EPDCCH
- Positioning Reference Signal (PRS)
- CSI Reference Signal (CSI-RS)

To support EPDCCH, UE-specific reference signals associated with EPDCCH are introduced for XGP Globe Mode. Details of all above reference signals for XGP Global Mode are described in section 6.10 of [43].

10.7.2.4.12 Synchronization signals

Synchronization signals for XGP Global Mode include Primary synchronization signal and Secondary synchronization signal.

Details of sequence generation and Mapping to resource elements of Primary synchronization signal and Secondary synchronization signal for XGP Global Mode are described in section 6.11 of [43].

10.7.2.4.13 OFDM baseband signal generation

OFDM baseband signal generation for XGP Global Mode is described in section 6.12 of [43].

10.7.2.4.14 Modulation and upconversion

Modulation and upconversion to the carrier frequency of the downlink complex-valued OFDM baseband signal for XGP Global Mode are described in section 6.13 of [43].

10.7.2.5 Channel coding, multiplexing and interleaving

Channel coding scheme is a combination of error detection, error correcting, rate matching, interleaving and transport channel or control information mapping onto/splitting from physical channels.

10.7.2.5.1 Generic procedures

Generic coding procedures include CRC calculation, Code block segmentation and code block CRC attachment, Channel coding, Rate matching and Code block concatenation for XGP Global Mode.

Details of generic coding procedures for XGP Global Mode are described in section 5.1 of [44].

10.7.2.5.2 Uplink transport channels and control information

10.7.2.5.2.1 Uplink shared channel

Data arrives to the coding unit in the form of a maximum of two transport blocks every transmission time interval (TTI) per UL cell. The following coding steps can be identified for each transport block of an UL cell:

- Add CRC to the transport block
- Code block segmentation and code block CRC attachment
- Channel coding of data and control information
- Rate matching
- Code block concatenation
- Multiplexing of data and control information

- Channel interleaver

Details of coding steps of uplink shared channel for XGP Global Mode are described in section 5.2.2 of [44].

10.7.2.5.2.2 Uplink control information on PUCCH

Chanel coding procedures of uplink control information on PUCCH for XGP Global Mode include Channel coding for UCI HARQ-ACK, Channel coding for UCI scheduling request, Channel coding for UCI channel quality information and Channel coding for UCI channel quality information and HARQ-ACK.

Details of Chanel coding procedures of uplink control information on PUCCH for XGP Global Mode are described in section 5.2.3 of [44].

10.7.2.5.2.3 Uplink control information on PUSCH without UL-SCH data

When control data are sent via PUSCH without UL-SCH data, the following coding steps can be identified:

- Channel coding of control information
- Control information mapping
- Channel interleaver

Details of coding steps are described in section 5.2.4 of [44].

10.7.2.5.3 Downlink transport channels and control information

10.7.2.5.3.1 Broadcast channel

Data arrives to the coding unit in the form of a maximum of one transport block every transmission time interval (TTI) of 40ms. The following coding steps can be identified:

- Add CRC to transport block
- Channel coding
- Rate matching.

Details of coding steps of downlink broadcast channel for XGP Global Mode are described in section 5.3.1 of [44].

10.7.2.5.3.2 Downlink shared channel, Paging channel and Multicast channel

Data arrives to the coding unit in the form of a maximum of two transport blocks every transmission time interval (TTI) per DL cell. The following coding steps can be identified for each transport block of a DL cell:

- Add CRC to transport block
- Code block segmentation and code block CRC attachment
- Channel coding
- Rate matching
- Code block concatenation.

Details of coding steps of downlink shared channel, Paging channel and Multicast channel for XGP Global Mode are described in section 5.3.2 of [44].

10.7.2.5.3.3 Downlink control information

A DCI transports downlink or uplink scheduling information, requests for aperiodic CQI reports, notifications of MCCH change or uplink power control commands for one cell and one RNTI. To support different transmission modes or purposes, different DCI formats are defined, including DCI format 0, 1, 1A, 1B, 1C, 1D, 2, 2A, 2B, 2C, 2D, 3, 3A, 4. Format 2D is newly introduced in this release of XGP Global Mode to support CoMP.

Coding steps of DCI include Information element multiplexing, CRC attachment, Channel coding and Rate matching. Detailed of coding steps of DCI for XGP Global Mode are described in section 5.3.3 of [44].

10.7.2.5.3.4 Control format indicator

Channel Coding of control format indicator for XGP Global Mode is described in section 5.3.4 of [44].

10.7.2.5.3.5 HARQ indicator (HI)

Channel Coding of HARQ indicator for XGP Global Mode is described in section 5.3.5 of [44].

10.7.2.6 Physical layer procedures

10.7.2.6.1 Synchronisation procedures

Synchronisation procedures for XGP Global Mode include Cell search, Timing synchronization (Radio link monitoring and Transmission timing adjustments), and Timing for Secondary Cell Activation / Deactivation. Timing for Secondary Cell Activation / Deactivation is defined for CA scenario.

Details of Synchronisation procedures for XGP Global Mode are described in section 4 of [45].

10.7.2.6.2 Power control

10.7.2.6.2.1 Uplink power control

Detailed power control of physical uplink shared channel, physical uplink control channel and Sounding Reference Symbol for XGP Global Mode are described in section 5.1 of [45].

10.7.2.6.2.2 Downlink power allocation

Downlink power allocation for XGP Global Mode is described in section 5.2 of [45].

10.7.2.6.3 Random access procedure

Random access procedure includes physical non-synchronized random access procedure and Random Access Response Grant.

Details of Random access procedure for XGP Global Mode is described in section 6 of [45].

10.7.2.6.4 Physical downlink shared channel related procedures

Physical downlink shared channel related procedures include UE procedure for receiving the physical downlink shared channel, UE procedure for reporting CSI and UE procedure for reporting HARQ-ACK/NACK.

10.7.2.6.4.1 UE procedure for receiving the physical downlink shared channel

DL transmission schemes defined for XGP Global mode include single-antenna port scheme, Transmit diversity scheme, Large delay CDD scheme, Closed-loop spatial multiplexing scheme, Multi-user MIMO scheme, Dual layer transmission scheme and Up to 8 layer transmission scheme. To support DL CoMP, TM10 is introduced.

The details of DL transmission schemes, resource allocation, modulation order and transport block size determination, storing soft channel bits, PDSCH resource mapping parameters, and antenna ports quasi co-location for PDSCH are described in section 7.1 of [45].

10.7.2.6.4.2 UE procedure for reporting Channel State Information (CSI)

Channel State Information includes Channel Quality Indicator (CQI), Precoding Matrix Indicator (PMI), precoding type indicator (PTI), and/or rank indication (RI).

UE procedures for reporting Channel State Information (CSI) include aperiodic CSI Reporting using PUSCH and periodic CSI Reporting using PUCCH. A UE in transmission mode 10 can be configured by higher layers for multiple periodic CSI reports corresponding to one or more CSI processes per serving cell on PUCCH.

For a serving cell and UE configured in transmission mode 10, the UE can be configured with one or more Channel State Information-Interference Measurement (CSI-IM) resource configuration(s) or can be configured with one or more zero-power CSI-RS resource configuration(s). For a serving cell and UE configured in transmission mode 1-9, the UE can be configured with one zero-power CSI-RS resource configuration. The UE can be configured with one CSI-RS resource configuration for a serving cell and UE configured in transmission mode 9.

Details of Channel State Information (CSI) definitions, definitions of CSI-IM resource and zero-power CSI-RS resource, and UE procedure for reporting CSI are described in section 7.2 of [45].

10.7.2.6.4.3 UE procedure for reporting ACK/NACK

ACK/NACK bundling and ACK/NACK multiplexing are supported by higher layer configuration for XGP Global Mode.

Details of UE procedure for reporting ACK/NACK for XGP Global Mode are described in section 7.3 of [45].

10.7.2.6.5 Physical uplink shared channel related procedures

Physical uplink shared channel related procedures for XGP Global Mode include Resource Allocation, UE sounding procedure, UE ACK/NACK procedure, UE PUSCH Hopping procedure, UE Reference Symbol procedure, Modulation order, redundancy version and transport block size determination and UE Transmit Antenna Selection.

There are two types of UL resource allocation, including contiguous RA and non-contiguous RA. Non-contiguous RA indicates to a scheduled UE two sets of resource blocks with each set including one or more consecutive resource block groups.

A UE shall transmit Sounding Reference Symbol (SRS) on per serving cell SRS resources based on two trigger types: Periodic trigger and Aperiodic trigger.

Details of Physical uplink shared channel related procedures for XGP Global Mode are described in section 8 of [45].

10.7.2.6.6 Physical downlink control channel procedures

Physical downlink control channel procedures for XGP Global Mode include UE procedures for PDCCH assignment, PHICH assignment, control format indicator (CFI) assignment, and EPDCCH assignment, PDCCH/EPDCCH validation procedure for semi-persistent scheduling, and PDCCH/EPDCCH control information procedure.

The UE shall monitor a set of EPDCCH candidates on one or more activated serving cells as configured by higher layer signalling for control information, where monitoring implies attempting to decode each of the EPDCCHs in the set according to the monitored DCI formats.

Details of physical downlink control channel procedures for XGP Global Mode are described in section 9 of [45].

10.7.2.6.7 Physical uplink control channel procedures

Physical uplink control channel procedures for XGP Global Mode include UE procedure for determining physical uplink control channel assignment and uplink ACK/NACK timing.

For TDD if a UE is configured with more than one serving cell and if at least two serving cells have different UL/DL configurations, new uplink HARQ-ACK timing is introduced for XGP Global Mode to support CA enhancement.

Details of physical uplink control channel procedures for XGP Global Mode are described in section 10 of [45].

10.7.2.7 Measurements

10.7.2.7.1 UE measurement capabilities

UE measurement capabilities for XGP Global Mode are defined in section 5.1 of [46].

10.7.2.7.2 E-UTRAN measurement abilities

E-UTRAN measurement abilities for XGP Global Mode are defined in section 5.2 of [46].

10.7.3 MAC layer – MSL1

10.7.3.1 General

10.7.3.1.1 MAC architecture

MAC architecture for XGP Global Mode is described in section 4.2 of [49].

10.7.3.1.2 Services

MAC layer services provided to upper layers and expected from physical layer for XGP Global Mode are described in section 4.3 of [49].

10.7.3.1.3 Functions

Functions supported by MAC layer for XGP Global Mode are described in section 4.4 of [49].

10.7.3.1.4 Channel structure

10.7.3.1.4.1 Transport Channels

The transport channels used by MAC layer for XGP Global Mode are described in section 4.5.1 of [49].

10.7.3.1.4.2 Logical Channels

The logical channels used by MAC layer for XGP Global Mode are described in section 4.5.2 of [49].

10.7.3.1.4.3 Mapping of Transport Channels to Logical Channels

Mapping of Transport Channels to logical channels for XGP Global Mode is described in section 4.5.3 of [49].

10.7.3.2 MAC procedures

10.7.3.2.1 Random Access procedure

Random Access procedure for XGP Global Mode includes Random Access Procedure initialization, Random Access Resource selection, Random Access Preamble transmission, Random Access Response reception, Contention Resolution and Completion of the Random Access procedure.

Random Access is allowed for an SCell. Random Access procedure on an SCell shall only be initiated by a PDCCH order.

Details of Random Access procedure for XGP Global Mode are described in section 5.1 of [49].

10.7.3.2.2 Maintenance of Uplink Time Alignment

The UE has a configurable timer timeAlignmentTimer per Timing Advance Group to support CA enhancement.

Maintenance of Uplink Time Alignment for XGP Global Mode is described in section 5.2 of [49].

10.7.3.2.3 DL-SCH data transfer

DL-SCH data transfer procedure for XGP Global Mode includes DL Assignment reception, HARQ operation, Disassembly and demultiplexing.

Details of DL-SCH data transfer for XGP Global Mode are described in section 5.3 of [49].

10.7.3.2.4 UL-SCH data transfer

UL-SCH data transfer procedure for XGP Global Mode includes UL Grant reception, HARQ operation, Multiplexing and assembly, Scheduling Request, Buffer Status Reporting and Power Headroom Reporting.

Details of UL-SCH data transfer for XGP Global Mode are described in section 5.4 of [49].

10.7.3.2.5 PCH reception

PCH reception procedure for XGP Global Mode is described in section 5.5 of [49].

10.7.3.2.6 BCH reception

BCH reception procedure for XGP Global Mode is described in section 5.6 of [49].

10.7.3.2.7 Discontinuous Reception (DRX)

Discontinuous Reception procedure for XGP Global Mode is described in section 5.7 of [49].

10.7.3.2.8 MAC reconfiguration

MAC reconfiguration procedure for XGP Global Mode is described in section 5.8 of [49].

10.7.3.2.9 MAC Reset

MAC Reset procedure for XGP Global Mode is described in section 5.9 of [49].

10.7.3.2.10 Semi-Persistent Scheduling

Semi-Persistent Scheduling procedure for XGP Global Mode is described in section 5.10 of [49].

10.7.3.2.11 Activation/Deactivation of SCells

In case of CA, the network may activate and deactivate the configured SCells. The PCell is always activated. Details of Activation/Deactivation mechanism for XGP Global Mode are described in section 5.13 of [49].

10.7.3.2.12 Handling of unknown, unforeseen and erroneous protocol data

Handling of unknown, unforeseen and erroneous MAC layer protocol data for XGP Global Mode is described in section 5.11 of [49].

10.7.3.3 Protocol Data Units, formats and parameters

10.7.3.3.1 Protocol Data Units

A MAC PDU is a bit string that is byte aligned in length. MAC PDU and MAC control elements for XGP Global Mode are described in section 6.1 of [49].

10.7.3.3.2 Formats and parameters

MAC header for DL-SCH and UL-SCH, MAC header for Random Access Response and MAC payload for Random Access Response are described in section 6.2 of [49].

10.7.3.4 Variables and constants

MAC layer variables and constants for XGP Global Mode include RNTI values, Backoff Parameter values, PRACH Mask Index values, Subframe_Offset values, TTI_BUNDLE_SIZE

value, DELTA_PREAMBLE values and HARQ RTT Timer.

Details of MAC layer variables and constants for XGP Global Mode are described in section 7 of [49].

10.7.4 Radio Link Control (RLC) layer – MSL2

10.7.4.1 General

10.7.4.1.1 RLC architecture

Functions of the RLC layer are performed by RLC entities. An RLC entity can be configured to perform data transfer in one of the following three modes: Transparent Mode (TM), Unacknowledged Mode (UM) or Acknowledged Mode (AM).

Details of RLC architecture for XGP Global Mode are described in section 4.2 of [50].

10.7.4.1.2 Services

RLC layer services provided to upper layers and expected from lower layers are described in section 4.3 of [50].

10.7.4.1.3 Functions

Functions supported by RLC layer for XGP Global Mode are described in section 4.4 of [50].

10.7.4.1.4 Data available for transmission

Details of data available for transmission in the RLC layer for XGP Global Mode are described in section 4.5 of [50].

10.7.4.2 Procedures

10.7.4.2.1 Data transfer procedures

RLC layer Data transfer procedures for XGP Global Mode include TM data transfer, UM data transfer and AM data transfer.

Details of RLC layer data transfer procedures for XGP Global Mode are described in section 5.1 of [50].

10.7.4.2.2 ARQ procedures

ARQ procedures for XGP Global Mode include Retransmission, Polling and Status reporting.

Details of ARQ procedures for XGP Global Mode are described in section 5.2 of [50].

10.7.4.2.3 SDU discard procedures

SDU discard procedures for XGP Global Mode are described in section 5.3 of [50].

10.7.4.2.4 Re-establishment procedure

RLC layer Re-establishment procedure for XGP Global Mode is described in section 5.4 of [50].

10.7.4.2.5 Handling of unknown, unforeseen and erroneous protocol data

Handling of unknown, unforeseen and erroneous RLC layer protocol data for XGP Global Mode is described in section 5.5 of [50].

10.7.4.3 Protocol data units, formats and parameters

10.7.4.3.1 Protocol data units

RLC PDUs can be categorized into RLC data PDUs and RLC control PDUs.

Details of RLC data PDU and RLC control PDU for XGP Global Mode are described in section 6.1 of [50].

10.7.4.3.2 Formats and parameters

The formats and parameters of RLC PDUs for XGP Global Mode are described in section 6.2 of [50].

10.7.4.4 Variables, constants and timers

RLC layer variables, constants, timers and configurable parameters for XGP Global Mode are described in section 7 of [50].

10.7.5 Packet Data Convergence Protocol (PDCP) layer – MSL3

10.7.5.1 General

10.7.5.1.1 PDCP architecture

PDCP structure and PDCP entities for XGP Global Mode are described in section 4.2 of [51].

10.7.5.1.2 Services

PDCP layer services provided to upper layers and expected from physical layer for XGP Global Mode are described in section 4.3 of [51].

10.7.5.1.3 Functions

PDCP layer supported functions for XGP Global Mode are described in section 4.4 of [51].

10.7.5.1.4 Data available for transmission

Details of data available for transmission in the PDCP layer for XGP Global Mode are described in section 4.5 of [51].

10.7.5.2 PDCP procedures

10.7.5.2.1 PDCP Data Transfer Procedures

UL PDCP Data Transfer Procedures and DL PDCP Data Transfer Procedures are described in section 5.1 of [51]

10.7.5.2.2 Re-establishment procedure

PDCP layer Re-establishment procedure for XGP Global Mode is described in section 5.2 of [51].

10.7.5.2.3 PDCP Status Report

PDCP Status Report procedure for XGP Global Mode are described in section 5.3 of [51].

10.7.5.2.4 PDCP discard

PDCP discard procedure for XGP Global Mode is described in section 5.4 of [51].

10.7.5.2.5 Header Compression and Decompression

PDCP layer Header Compression and Decompression procedures for XGP Global Mode are described in section 5.5 of [51].

10.7.5.2.6 Ciphering and Deciphering

PDCP layer Ciphering and Deciphering procedures for XGP Global Mode are described in section 5.6 of [51].

10.7.5.2.7 Integrity Protection and Verification

PDCP layer Integrity Protection and Verification procedures for XGP Global Mode are described in section 5.7 of [51].

10.7.5.2.8 Handling of unknown, unforeseen and erroneous protocol data

Handling of unknown, unforeseen and erroneous PDCP layer protocol data for XGP Global Mode is described in section 5.8 of [51].

10.7.5.3 Protocol data units, formats and parameters

10.7.5.3.1 Protocol data units

PDCP PDUs can be categorized into PDCP data PDUs and PDCP control PDUs.

Details of PDCP data PDU and PDCP control PDU for XGP Global Mode are described in section 6.1 of [51].

10.7.5.3.2 Formats

Different PDCP PDUs are supported for XGP Global Mode: Control plane PDCP Data PDU, User plane PDCP Data PDU with long PDCP SN , User plane PDCP Data PDU with short PDCP SN, PDCP Control PDU for interspersed ROHC feedback packet and PDCP Control PDU for PDCP status report.

In order to support CA enhancement., a PDCP data PDU format using 15 bit PDCP SN and a PDCP status report using 15 bit FMS field are introduced for DRBs mapped on AM RLC.

Detailed formats of PDCP PDUs for XGP Global Mode are described in section 6.2 of [51].

10.7.5.3.3 Parameters

PDCP layer parameters for XGP Global Mode are described in section 6.3 of [51].

10.7.5.4 Variables, constants and timers

PDCP layer variables, constants and timers for XGP Global Mode are described in section 7 of [51].

10.7.6 Radio Resource Control (RRC) layer

10.7.6.1 General

10.7.6.1.1 Architecture

RRC layer architecture for XGP Global Mode is described in section 4.2 of [52].

10.7.6.1.2 Services

RRC services provided to upper layers and expected from lower layers for XGP Global Mode are described in section 4.3 of [52].

10.7.6.1.3 Functions

RRC layer supported functions for XGP Global Mode are described in section 4.4 of [52].

10.7.6.2 Procedures

10.7.6.2.1 General

General RRC requirements for XGP Global Mode are described in section 5.1 of [52].

10.7.6.2.2 System information

10.7.6.2.2.1 Introduction

System information is divided into the MasterInformationBlock (MIB) and a number of SystemInformationBlocks (SIBs).

Scheduling of System information, System information validity and notification of changes, Indication of ETWS notification and Indication of CMAS notification for XGP Global Mode are described in section 5.2.1 of [52].

10.7.6.2.2.2 System information acquisition

System information acquisition for XGP Global Mode is described in section 5.2.2 of [52].

10.7.6.2.2.3 Acquisition of an SI message

Acquisition of an SI message for XGP Global Mode is described in section 5.2.3 of [52].

10.7.6.2.3 Connection control

10.7.6.2.3.1 Introduction

RRC connection control procedures include RRC connection control, Security and Connected mode mobility.

Overview of connection control procedure is described in section 5.3.1 of [52].

10.7.6.2.3.2 Paging

Paging initiation procedure and Reception procedure of the Paging message by the UE for XGP Global Mode are described in [48] and section 5.3.2 of [52].

10.7.6.2.3.3 RRC connection establishment

RRC connection establishment procedures for XGP Global Mode include Initiation, Actions related to transmission of RRC Connection Request message, Reception of the RRC Connection establishment related messages, Cell re-selection, Timer expiry, Abortion of RRC connection establishment and Handling of SSAC related parameters.

RRC connection establishment procedure for XGP Global Mode is described in section 5.3.3 of [52].

10.7.6.2.3.4 Initial security activation

Initial security activation procedure for XGP Global Mode is described in section 5.3.4 of [52].

10.7.6.2.3.5 RRC connection reconfiguration

RRC connection reconfiguration procedures include Initiation procedure, Reception of RRC Connection Reconfiguration related message, Reconfiguration failure procedure, Timer expiry procedure, etc.

RRC connection reconfiguration procedures for XGP Global Mode are described in section 5.3.5 of [52].

10.7.6.2.3.6 Counter check

Counter check procedures include Initiation procedure and Reception of the Counter Check message procedure.

Counter check procedures for XGP Global Mode are described in section 5.3.6 of [52].

10.7.6.2.3.7 RRC connection re-establishment

RRC connection re-establishment procedures include Initiation procedure, reception of the RRC Connection Re-establishment related messages, Timer expiry procedure and etc.

RRC connection re-establishment procedures for XGP Global Mode are described in section 5.3.7 of [52].

10.7.6.2.3.8 RRC connection release

RRC connection release procedures include Initiation procedure, Reception of the RRC Connection Release message and Timer expiry procedure.

RRC connection release procedures for XGP Global Mode are described in section 5.3.8 of [52].

10.7.6.2.3.9 RRC connection release requested by upper layers

RRC connection release requested by upper layers for XGP Global Mode is described in section 5.3.9 of [52].

10.7.6.2.3.10 Radio resource configuration

Radio resource configuration procedures include SRB addition/ modification/ release, MAC main reconfiguration, Semi-persistent scheduling reconfiguration, Physical channel reconfiguration and Radio Link Failure Timers and Constants reconfiguration.

Radio resource configuration procedures for XGP Global Mode are described in section 5.3.10 of [52].

10.7.6.2.3.11 Radio link failure related actions

Radio link failure related actions include Detection of physical layer problems in RRC_CONNECTED, Recovery of physical layer problems and Detection of radio link failure.

Radio link failure related actions for XGP Global Mode are described in section 5.3.11 of [52].

10.7.6.2.3.12 UE actions upon leaving RRC_CONNECTED

UE actions upon leaving RRC_CONNECTED for XGP Global Mode is described in section 5.3.12 of [52].

10.7.6.2.3.13 UE actions upon PUCCH/ SRS release request

UE actions upon PUCCH/ SRS release request for XGP Global Mode is described in section 5.3.13 of [52].

10.7.6.2.3.14 Proximity indication

Initiation and Actions related to transmission of Proximity indication message for XGP Global Mode are described in section 5.3.14 of [52].

10.7.6.2.4 Inter-RAT mobility

Inter-RAT mobility procedures include Handover to E-UTRA procedure, Mobility from E-UTRA procedure and Inter-RAT cell change order to E-UTRAN.

Inter-RAT mobility procedures for XGP Global Mode are described in section 5.4 of [52].

10.7.6.2.5 Measurements

Measurements for XGP Global Mode include Measurement configuration, performing measurements, Measurement report triggering, Measurement reporting, Measurement related actions, and Inter-frequency RSTD measurement indication.

Measurements for XGP Global Mode are described in section 5.5 of [52].

10.7.6.2.6 Other procedures

DL and UL information transfer, UE capability transfer and UE information request procedures are described in section 5.6 of [52]. Generic RRC layer error handling for XGP Global Mode is described in section 5.7 of [52].

10.7.6.2.7 MBMS

MBMS procedures for XGP Global Mode include MCCH information acquisition, MBMS PTM radio bearer configuration, MBMS Counting Procedure, and MBMS interest indication.

Details of MBMS procedures are described in section 5.8 of [52].

10.7.6.3 Protocol data units, formats and parameters

10.7.6.3.1 RRC messages

General RRC message structure and RRC Message definitions for XGP Global Mode are described in section 6.2 of [52].

10.7.6.3.2 RRC information elements

RRC information elements include System information blocks, Radio resource control information elements, Security control information elements, Mobility control information elements, Measurement information elements and other information elements.

In order to support Release 11 features, some new elements are introduced/added in XGP Global Mode. For example, a new SIB (SIB15) and a new IE CarrierFreqListMBMS are introduced to support MBMS enhancement. PLMN-IdentityList3 is introduced to support MDT enhancements. Also new elements are added into Radio Resource Control information to support features of EPDCCH and CA enhancement.

Details of RRC information elements for XGP Global Mode are described in section 6.3 of [52].

10.7.6.3.3 RRC multiplicity and type constraint values

RRC multiplicity and type constraint values for XGP Global Mode are described in section 6.4 of [52].

10.7.6.4 Variables and constants

RRC layer UE variables, Counters, Timers and Constants for XGP Global Mode are described in section 7 of [52].

10.7.6.5 Protocol data unit abstract syntax

Structure of encoded RRC messages, Basic production, extension and Padding for XGP Global Mode are described in section 8 of [52].

10.7.6.6 Specified and default radio configurations

10.7.6.6.1 Specified configurations

Logical channel configurations and specified SRB configurations for XGP Global Mode are described in section 9.1 of [52].

10.7.6.6.2 Default radio configurations

Default SRB configurations, Default MAC main configuration, Default semi-persistent scheduling configuration, Default physical channel configuration and Default values timers and constants are described in section 9.2 of [52].

10.7.6.7 Radio information related interactions between network nodes

Radio information related interactions between network nodes include Inter-node RRC messages, Inter-node RRC information element definitions, Inter-node RRC multiplicity and type constraint values and Mandatory information in AS-Config.

Radio information related interactions between network nodes for XGP Global Mode are described in section 10 of [52].

10.7.6.8 UE capability related constraints and performance requirements

UE capability related constraints and Processing delay requirements for RRC procedures are described in section 11 of [52].

Annex X: Regional Condition

X.1 Scope

The XGP standard should accommodate some requirements in accordance with regional or local regulations. The conditions for regional case are described here in this annex.

X.2 The Radio Band

The XGP operation band is mainly allocated from 1 GHz to 3 GHz for global deployment, in which the typical BWA and legacy PHS bands are included. Regional condition is described in this section.

X.2.1 Taiwan Condition

In Taiwan, the legacy PHS can be migrated to XGP over its existing 1.9 GHz TDD band.

X.3 The Effective Isotropic Radiated Power (EIRP)

In some regions, XGP system is configured as a Low-tier system. For such low-tier system, the transmitter power of the BS should be restricted within certain amount in accordance to regional regulations.

X.3.1 Taiwan Condition

The EIRP of BS for 1.9 GHz TDD band should be restricted as less than or equal to 32 Watt.

Appendix A: Full Subcarrier Mode

A.1 Overview

Full subcarrier mode defines the way to allocate DC carrier and guard carrier for the purpose of improving data throughput. Note that full subcarrier mode is used only in DL.

A.2 Definition of Full Subcarrier Mode

Figure A.1 shows full subcarrier mode in several ECBWs as examples. As shown in the figure, all subcarriers in ECBW except central subcarrier shall be used as data subcarriers.

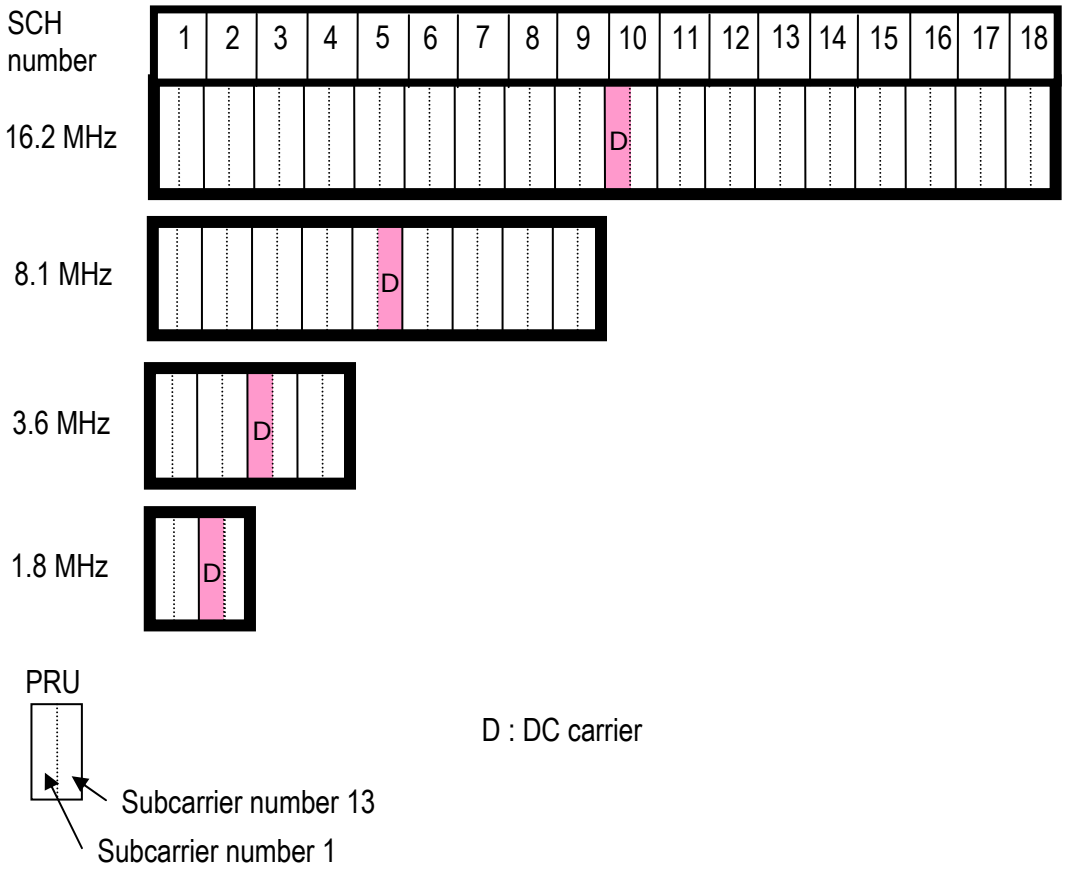

Figure A.1 Full Subcarrier Mode

Appendix B: Modulation

B.1 BPSK

(1) The serial signal input is converted to (Ak) symbols by the serial/parallel converter and then changed to corresponding signals (Ik, Qk) by the encoder. Conversion from serial signal input to (Ak) (binary/binary conversion) is performed as noted below, and conversion from (Ak) to (Ik, Qk) is performed according to the table below.

Binary Data Time Series ■ ■ ■ an-1 an an+1 ■ ■ ■

↓

Symbol Time Series (an)

↓

Ak

Ak	Ik	Qk
1	1	0
0	-1	0

(2) The signal space diagram is shown in figure below.

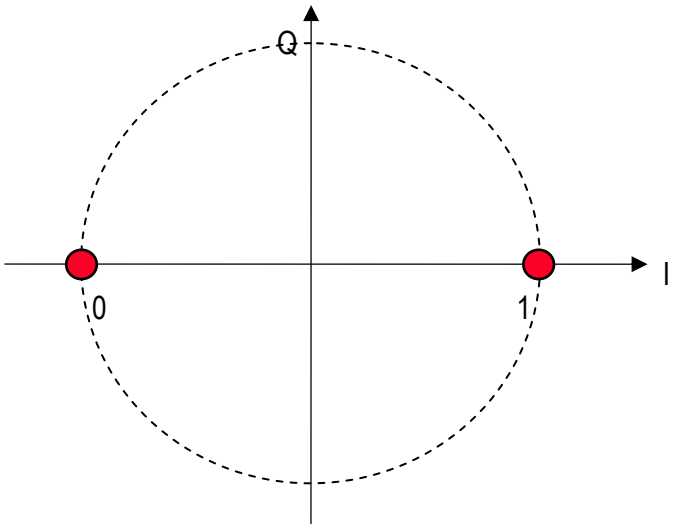

Figure B.1 BPSK

B.2 π/2 - BPSK

(1) The serial signal input is converted to (A2k) or (A2k+1) symbols by the serial/parallel converter and then changed to corresponding signals (I2k, Q2k) or (I2k+1, Q2k+1) by the encoder. Conversion from serial signal input to (A2k) or (A2k+1) (binary/binary conversion) is performed as noted below, and conversion from (A2k) to (I2k, Q2k) or from (A2k+1) to (I2k+1, Q2k+1) is performed according to the table below.

Binary Data Time Series	■ ■ ■	a2n-1	a2n	a2n+1	■ ■ ■
↓			↓	↓	
Symbol Time Series			(a2n)	(a2n+1)	
			↓	↓	
			A2k	A2k+1	

A2k	I2k	Q2k
1	1	0
0	-1	0

A2k+1	I2k+1	Q2k+1
1	0	-1
0	0	1

(2) The signal space diagram is shown in figure below.

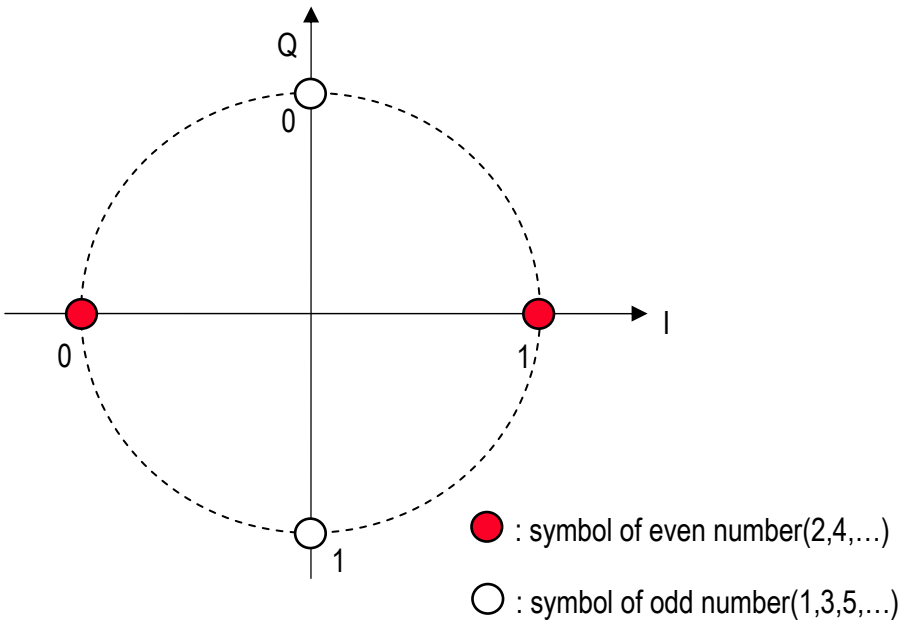

Figure B.2 π/2 -BPSK

B.3 QPSK

(1) The serial signal input is converted to (Ak, Bk) symbols by the serial/parallel converter and then changed to corresponding signals (Ik, Qk) by the encoder. Conversion from serial signal input to (Ak, Bk) (binary/quaternary conversion) is performed as noted below, and conversion from (Ak, Bk) to (Ik, Qk) is performed according to the table below.

Binary Data Time Series ■ ■ ■ an-1 an an+1 ■ ■ ■

↓ ↓ ↓

Symbol Time Series (an, an+1)

↓ ↓

Ak Bk

Ak	Bk	Ik	Qk
1	1	1/√2	1/√2
1	0	1/√2	-1/√2
0	1	-1/√2	1/√2
0	0	-1/√2	-1/√2

(2) The signal space diagram is shown in the figure below.

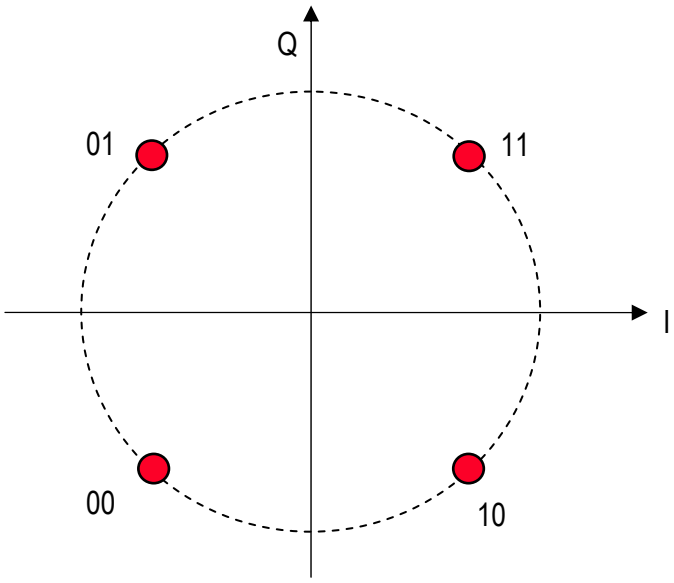

Figure B.3 QPSK

B.4 π/4 - QPSK

(1) The serial signal input is converted to (A2k, B2k) or (A2k+1, B2k+1) symbols by the serial/parallel converter and then changed to corresponding signals (I2k, Q2k) or (I2k+1, Q2k+1) by the encoder. Conversion from serial signal input to (A2k, B2k) or (A2k+1, B2k+1) (binary/quaternary conversion) is performed as noted below, and conversion from (A2k,B2k) to (I2k, Q2k) or conversion from (A2k+1, B2k+1) to (I2k+1, Q2k+1) is performed according to the table below.

Binary Data Time Series	■ ■ ■	a4n-1	a4n	a4n+1	a4n+2	a4n+3	■ ■ ■
↓			↓	↓	↓	↓	
Symbol Time Series			(a4n, a4n+1)		(a4n+2, a4n+3)		
			↓	↓	↓	↓	
			A2k	B2k	A2k+1	B2K+1	

A2k	B2k	Ik	Qk
1	1	1/√2	1/√2
1	0	1/√2	-1/√2
0	1	-1/√2	1/√2
0	0	-1/√2	-1/√2

A2k+1	B2k＋1	Ik	Qk
1	1	1	0
1	0	0	-1
0	1	0	1
0	0	-1	0

(2) The signal space diagram is shown in the figure below.

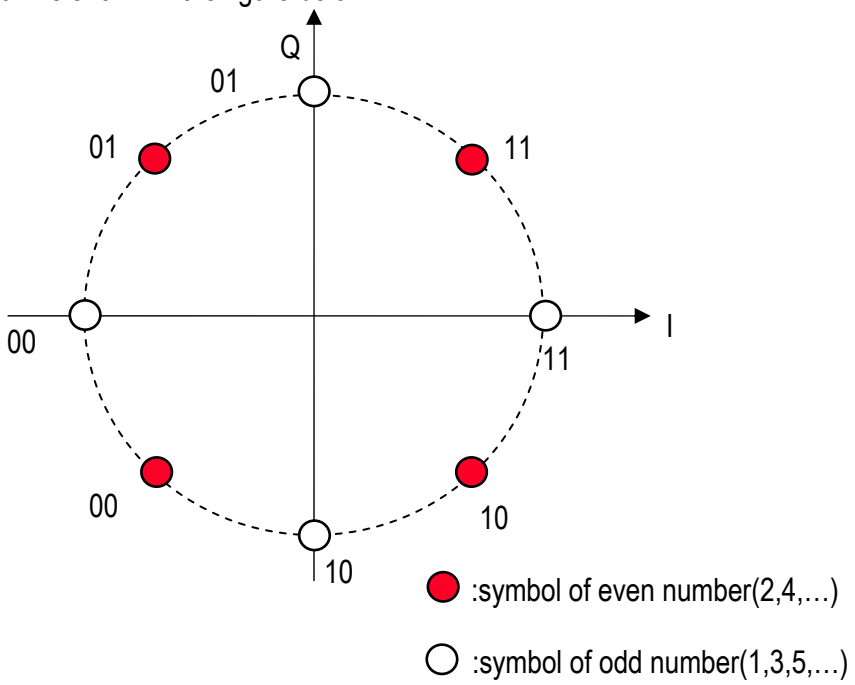

Figure B.4 π/4 - QPSK

B.5 8PSK

(1) The serial signal input is converted to (Ak, Bk, Ck) symbols by the serial/parallel converter and then changed to corresponding signals (Ik, Qk) by the encoder. Conversion from serial signal input to (Ak, Bk, Ck) (binary/quaternary conversion) is performed as noted below, and conversion from (Ak, Bk, Ck) to (Ik, Qk) is performed according to the table below.

Binary Data Time Series ■ ■ ■ an-1 an an+1 an+2 ■ ■ ■

↓ ↓ ↓ ↓

Symbol Time Series (an, an+1, an+2)

↓ ↓ ↓

Ak Bk Ck

Ak	Bk	Ck	Ik	Qk
1	1	1	1	0
1	1	0	1/√2	1/√2
1	0	1	1/√2	-1/√2
1	0	0	0	-1
0	1	1	-1/√2	1/√2
0	1	0	0	1
0	0	1	-1	0
0	0	0	-1/√2	-1/√2

(2) The signal space diagram is shown in the figure below.

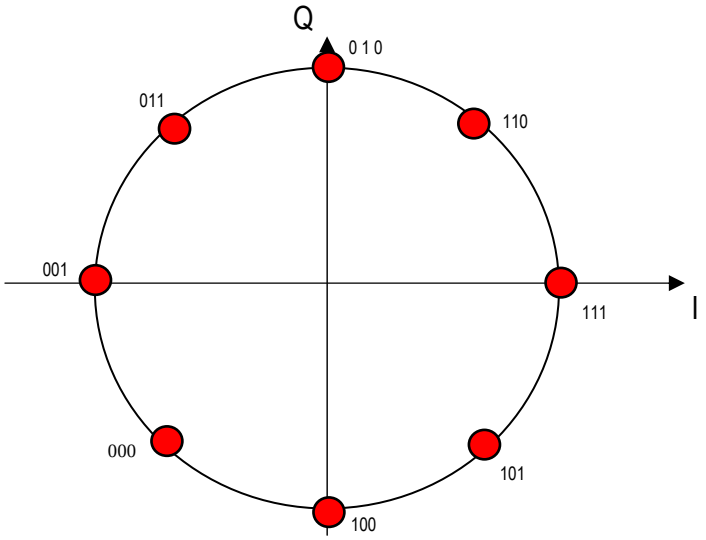

Figure B.5 8PSK

B.6 16QAM

(1) The serial signal input is converted to (Ak, Bk, Ck, Dk) symbols by the serial/parallel converter and then changed to corresponding signals (Ik, Qk) by the encoder. Conversion from serial signal input to (Ak, Bk, Ck, Dk) (binary/16ary conversion) is performed as noted below, and conversion from (Ak, Bk, Ck, Dk) to (Ik, Qk) is performed according to the table below.

Binary Data Time Series ■ ■ ■ an-1 an an+1 an+2 an+3 ■ ■ ■

↓ ↓ ↓ ↓ ↓

Symbol Time Series (an, an+1, an+2, an+3)

↓ ↓ ↓ ↓

Ak Bk Ck Dk

Ak	Bk	Ck	Dk	Ik	Qk
1	1	1	1	3/√10	3/√10
1	1	1	0	3/√10	1/√10
1	0	1	0	3/√10	-1/√10
1	0	1	1	3/√10	-3/√10
1	1	0	1	1/√10	3/√10
1	1	0	0	1/√10	1/√10
1	0	0	0	1/√10	-1/√10
1	0	0	1	1/√10	-3/√10
0	1	0	1	-1/√10	3/√10
0	1	0	0	-1/√10	1/√10
0	0	0	0	-1/√10	-1/√10
0	0	0	1	-1/√10	-3/√10
0	1	1	1	-3/√10	3/√10
0	1	1	0	-3/√10	1/√10
0	0	1	0	-3/√10	-1/√10
0	0	1	1	-3/√10	-3/√10

(2) The signal space diagram is shown in figure below.

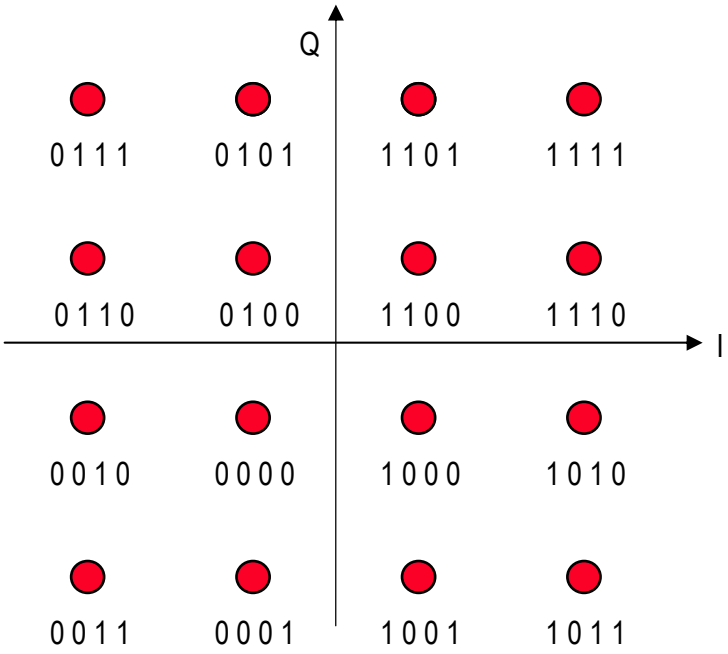

Figure B.6 16QAM

B.7 64QAM

(1) The serial signal input is converted to (Ak, Bk, Ck, Dk, Ek, Fk) symbols by the serial/parallel converter and then changed to corresponding signals (Ik, Qk) by the encoder. Conversion from serial signal input to (Ak, Bk, Ck, Dk, Ek, Fk) (binary/64ary conversion) is performed as noted below, and conversion from (Ak, Bk, Ck, Dk, Ek, Fk) to (Ik, Qk) is performed according to the table below.

Binary Data Time Series ■ ■ ■ an an+1 an+2 an+3 an+4 an+5 ■ ■ ■

↓ ↓ ↓ ↓ ↓ ↓ ↓

Symbol Time Series (an, an+1, an+2, an+3, an+4, an+5)

↓ ↓ ↓ ↓ ↓ ↓

Ak Bk Ck Dk Ek Fk

Ak	Bk	Ck	Dk	Ek	Fk	Ik	Qk
1	1	1	1	1	1	7/√42	7/√42
1	1	1	1	1	0	7/√42	5/√42
1	1	1	0	1	0	7/√42	3/√42
1	1	1	0	1	1	7/√42	1/√42
1	0	1	0	1	1	7/√42	-1/√42
1	0	1	0	1	0	7/√42	-3/√42
1	0	1	1	1	0	7/√42	-5/√42
1	0	1	1	1	1	7/√42	-7/√42
1	1	1	1	0	1	5/√42	7/√42
1	1	1	1	0	0	5/√42	5/√42
1	1	1	0	0	0	5/√42	3/√42
1	1	1	0	0	1	5/√42	1/√42
1	0	1	0	0	1	5/√42	-1/√42
1	0	1	0	0	0	5/√42	-3/√42
1	0	1	1	0	0	5/√42	-5/√42
1	0	1	1	0	1	5/√42	-7/√42
1	1	0	1	0	1	3/√42	7/√42
1	1	0	1	0	0	3/√42	5/√42
1	1	0	0	0	0	3/√42	3/√42
1	1	0	0	0	1	3/√42	1/√42

1	0	0	0	0	1	3/√42	-1/√42
1	0	0	0	0	0	3/√42	-3/√42
1	0	0	1	0	0	3/√42	-5/√42
1	0	0	1	0	1	3/√42	-7/√42
1	1	0	1	1	1	1/√42	7/√42
1	1	0	1	1	0	1/√42	5/√42
1	1	0	0	1	0	1/√42	3/√42
1	1	0	0	1	1	1/√42	1/√42
1	0	0	0	1	1	1/√42	-1/√42
1	0	0	0	1	0	1/√42	-3/√42
1	0	0	1	1	0	1/√42	-5/√42
1	0	0	1	1	1	1/√42	-7/√42
0	1	0	1	1	1	-1/√42	7/√42
0	1	0	1	1	0	-1/√42	5/√42
0	1	0	0	1	0	-1/√42	3/√42
0	1	0	0	1	1	-1/√42	1/√42
0	0	0	0	1	1	-1/√42	-1/√42
0	0	0	0	1	0	-1/√42	-3/√42
0	0	0	1	1	0	-1/√42	-5/√42
0	0	0	1	1	1	-1/√42	-7/√42
0	1	0	1	0	1	-3/√42	7/√42
0	1	0	1	0	0	-3/√42	5/√42
0	1	0	0	0	0	-3/√42	3/√42
0	1	0	0	0	1	-3/√42	1/√42
0	0	0	0	0	1	-3/√42	-1/√42
0	0	0	0	0	0	-3/√42	-3/√42
0	0	0	1	0	0	-3/√42	-5/√42
0	0	0	1	0	1	-3/√42	-7/√42
0	1	1	1	0	1	-5/√42	7/√42
0	1	1	1	0	0	-5/√42	5/√42
0	1	1	0	0	0	-5/√42	3/√42
0	1	1	0	0	1	-5/√42	1/√42
0	0	1	0	0	1	-5/√42	-1/√42
0	0	1	0	0	0	-5/√42	-3/√42
0	0	1	1	0	0	-5/√42	-5/√42
0	0	1	1	0	1	-5/√42	-7/√42

0	1	1	1	1	1	-7/√42	7/√42
0	1	1	1	1	0	-7/√42	5/√42
0	1	1	0	1	0	-7/√42	3/√42
0	1	1	0	1	1	-7/√42	1/√42
0	0	1	0	1	1	-7/√42	-1/√42
0	0	1	0	1	0	-7/√42	-3/√42
0	0	1	1	1	0	-7/√42	-5/√42
0	0	1	1	1	1	-7/√42	-7/√42

(2) The signal space diagram is shown in the figure below.

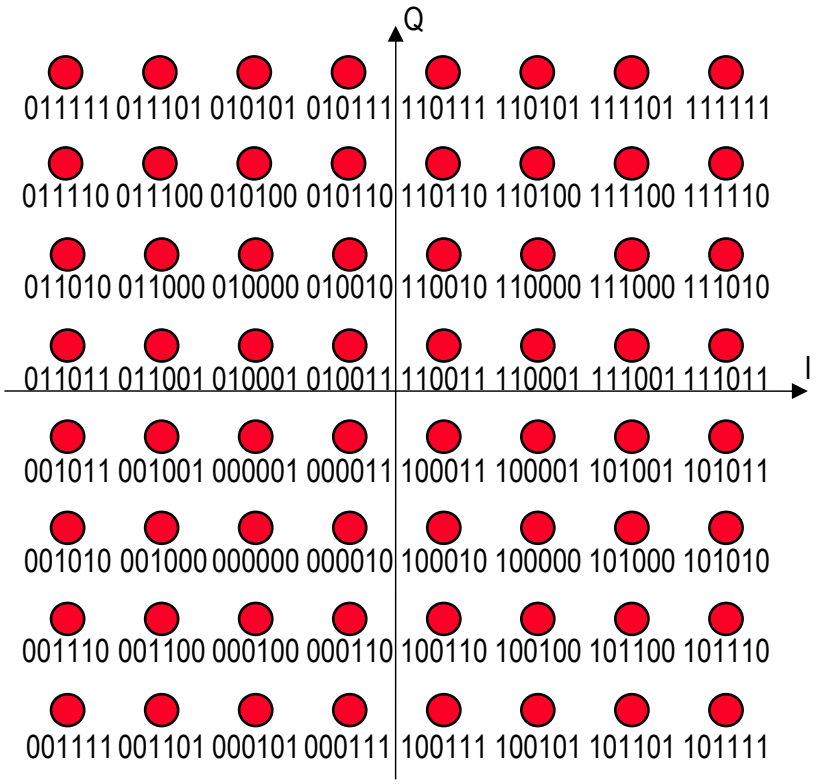

Figure B.7 64QAM

B.8 256QAM

(1) The serial signal input is converted to (Ak, Bk, Ck, Dk, Ek, Fk, Gk, Hk) symbols by the serial/parallel converter and then changed to corresponding signals (Ik, Qk) by the encoder. Conversion from serial signal input to (Ak, Bk, Ck, Dk, Ek, Fk, Gk, Hk) (binary/256ary conversion) is performed as noted below, and conversion from (Ak, Bk, Ck, Dk, Ek, Fk, Gk, Hk) to (Ik, Qk) is performed according to the table below.

Binary Data Time Series	■ ■ ■	an	an+1	an+2	■ ■ ■	an+6	an+7	■ ■ ■
↓		↓	↓	↓	↓	↓	↓	
Symbol Time Series		(an, an+1, an+2, …, an+6, an+7)						
		↓	↓	↓	↓	↓	↓	
		Ak	Bk	Ck	…	Gk	Hk	

Ak	Bk	Ck	Dk	Ek	Fk	Gk	Hk	Ik	Qk	Ak	Bk	Ck	Dk	Ek	Fk	Gk	Hk	Ik	Qk
0	0	0	0	0	0	0	0	-5/√170	-5/√170	0	0	1	0	0	0	0	0	-11/√170	-5/√170
0	0	0	0	0	0	0	1	-5/√170	-7/√170	0	0	1	0	0	0	0	1	-11/√170	-7/√170
0	0	0	0	0	0	1	0	-7/√170	-5/√170	0	0	1	0	0	0	1	0	-9/√170	-5/√170
0	0	0	0	0	0	1	1	-7/√170	-7/√170	0	0	1	0	0	0	1	1	-9/√170	-7/√170
0	0	0	0	0	1	0	0	-5/√170	-3/√170	0	0	1	0	0	1	0	0	-11/√170	-3/√170
0	0	0	0	0	1	0	1	-5/√170	-1/√170	0	0	1	0	0	1	0	1	-11/√170	-1/√170
0	0	0	0	0	1	1	0	-7/√170	-3/√170	0	0	1	0	0	1	1	0	-9/√170	-3/√170
0	0	0	0	0	1	1	1	-7/√170	-1/√170	0	0	1	0	0	1	1	1	-9/√170	-1/√170
0	0	0	0	1	0	0	0	-3/√170	-5/√170	0	0	1	0	1	0	0	0	-13/√170	-5/√170
0	0	0	0	1	0	0	1	-3/√170	-7/√170	0	0	1	0	1	0	0	1	-13/√170	-7/√170
0	0	0	0	1	0	1	0	-1/√170	-5/√170	0	0	1	0	1	0	1	0	-15/√170	-5/√170
0	0	0	0	1	0	1	1	-1/√170	-7/√170	0	0	1	0	1	0	1	1	-15/√170	-7/√170
0	0	0	0	1	1	0	0	-3/√170	-3/√170	0	0	1	0	1	1	0	0	-13/√170	-3/√170
0	0	0	0	1	1	0	1	-3/√170	-1/√170	0	0	1	0	1	1	0	1	-13/√170	-1/√170
0	0	0	0	1	1	1	0	-1/√170	-3/√170	0	0	1	0	1	1	1	0	-15/√170	-3/√170
0	0	0	0	1	1	1	1	-1/√170	-1/√170	0	0	1	0	1	1	1	1	-15/√170	-1/√170
0	0	0	1	0	0	0	0	-5/√170	-11/√170	0	0	1	1	0	0	0	0	-11/√170	-11/√170
0	0	0	1	0	0	0	1	-5/√170	-9/√170	0	0	1	1	0	0	0	1	-11/√170	-9/√170
0	0	0	1	0	0	1	0	-7/√170	-11/√170	0	0	1	1	0	0	1	0	-9/√170	-11/√170
0	0	0	1	0	0	1	1	-7/√170	-9/√170	0	0	1	1	0	0	1	1	-9/√170	-9/√170
0	0	0	1	0	1	0	0	-5/√170	-13/√170	0	0	1	1	0	1	0	0	-11/√170	-13/√170
0	0	0	1	0	1	0	1	-5/√170	-15/√170	0	0	1	1	0	1	0	1	-11/√170	-15/√170
0	0	0	1	0	1	1	0	-7/√170	-13/√170	0	0	1	1	0	1	1	0	-9/√170	-13/√170
0	0	0	1	0	1	1	1	-7/√170	-15/√170	0	0	1	1	0	1	1	1	-9/√170	-15/√170
0	0	0	1	1	0	0	0	-3/√170	-11/√170	0	0	1	1	1	0	0	0	-13/√170	-11/√170
0	0	0	1	1	0	0	1	-3/√170	-9/√170	0	0	1	1	1	0	0	1	-13/√170	-9/√170
0	0	0	1	1	0	1	0	-1/√170	-11/√170	0	0	1	1	1	0	1	0	-15/√170	-11/√170
0	0	0	1	1	0	1	1	-1/√170	-9/√170	0	0	1	1	1	0	1	1	-15/√170	-9/√170
0	0	0	1	1	1	0	0	-3/√170	-13/√170	0	0	1	1	1	1	0	0	-13/√170	-13/√170
0	0	0	1	1	1	0	1	-3/√170	-15/√170	0	0	1	1	1	1	0	1	-13/√170	-15/√170
0	0	0	1	1	1	1	0	-1/√170	-13/√170	0	0	1	1	1	1	1	0	-15/√170	-13/√170
0	0	0	1	1	1	1	1	-1/√170	-15/√170	0	0	1	1	1	1	1	1	-15/√170	-15/√170

Ak	Bk	Ck	Dk	Ek	Fk	Gk	Hk	Ik	Qk	Ak	Bk	Ck	Dk	Ek	Fk	Gk	Hk	Ik	Qk
0	1	0	0	0	0	0	0	-5/√170	5/√170	0	1	1	0	0	0	0	0	-11/√170	5/√170
0	1	0	0	0	0	0	1	-5/√170	7/√170	0	1	1	0	0	0	0	1	-11/√170	7/√170
0	1	0	0	0	0	1	0	-7/√170	5/√170	0	1	1	0	0	0	1	0	-9/√170	5/√170
0	1	0	0	0	0	1	1	-7/√170	7/√170	0	1	1	0	0	0	1	1	-9/√170	7/√170
0	1	0	0	0	1	0	0	-5/√170	3/√170	0	1	1	0	0	1	0	0	-11/√170	3/√170
0	1	0	0	0	1	0	1	-5/√170	1/√170	0	1	1	0	0	1	0	1	-11/√170	1/√170
0	1	0	0	0	1	1	0	-7/√170	3/√170	0	1	1	0	0	1	1	0	-9/√170	3/√170
0	1	0	0	0	1	1	1	-7/√170	1/√170	0	1	1	0	0	1	1	1	-9/√170	1/√170
0	1	0	0	1	0	0	0	-3/√170	5/√170	0	1	1	0	1	0	0	0	-13/√170	5/√170
0	1	0	0	1	0	0	1	-3/√170	7/√170	0	1	1	0	1	0	0	1	-13/√170	7/√170
0	1	0	0	1	0	1	0	-1/√170	5/√170	0	1	1	0	1	0	1	0	-15/√170	5/√170
0	1	0	0	1	0	1	1	-1/√170	7/√170	0	1	1	0	1	0	1	1	-15/√170	7/√170
0	1	0	0	1	1	0	0	-3/√170	3/√170	0	1	1	0	1	1	0	0	-13/√170	3/√170
0	1	0	0	1	1	0	1	-3/√170	1/√170	0	1	1	0	1	1	0	1	-13/√170	1/√170
0	1	0	0	1	1	1	0	-1/√170	3/√170	0	1	1	0	1	1	1	0	-15/√170	3/√170
0	1	0	0	1	1	1	1	-1/√170	1/√170	0	1	1	0	1	1	1	1	-15/√170	1/√170
0	1	0	1	0	0	0	0	-5/√170	11/√170	0	1	1	1	0	0	0	0	-11/√170	11/√170
0	1	0	1	0	0	0	1	-5/√170	9/√170	0	1	1	1	0	0	0	1	-11/√170	9/√170
0	1	0	1	0	0	1	0	-7/√170	11/√170	0	1	1	1	0	0	1	0	-9/√170	11/√170
0	1	0	1	0	0	1	1	-7/√170	9/√170	0	1	1	1	0	0	1	1	-9/√170	9/√170
0	1	0	1	0	1	0	0	-5/√170	13/√170	0	1	1	1	0	1	0	0	-11/√170	13/√170
0	1	0	1	0	1	0	1	-5/√170	15/√170	0	1	1	1	0	1	0	1	-11/√170	15/√170
0	1	0	1	0	1	1	0	-7/√170	13/√170	0	1	1	1	0	1	1	0	-9/√170	13/√170
0	1	0	1	0	1	1	1	-7/√170	15/√170	0	1	1	1	0	1	1	1	-9/√170	15/√170
0	1	0	1	1	0	0	0	-3/√170	11/√170	0	1	1	1	1	0	0	0	-13/√170	11/√170
0	1	0	1	1	0	0	1	-3/√170	9/√170	0	1	1	1	1	0	0	1	-13/√170	9/√170
0	1	0	1	1	0	1	0	-1/√170	11/√170	0	1	1	1	1	0	1	0	-15/√170	11/√170
0	1	0	1	1	0	1	1	-1/√170	9/√170	0	1	1	1	1	0	1	1	-15/√170	9/√170
0	1	0	1	1	1	0	0	-3/√170	13/√170	0	1	1	1	1	1	0	0	-13/√170	13/√170
0	1	0	1	1	1	0	1	-3/√170	15/√170	0	1	1	1	1	1	0	1	-13/√170	15/√170
0	1	0	1	1	1	1	0	-1/√170	13/√170	0	1	1	1	1	1	1	0	-15/√170	13/√170
0	1	0	1	1	1	1	1	-1/√170	15/√170	0	1	1	1	1	1	1	1	-15/√170	15/√170

Ak	Bk	Ck	Dk	Ek	Fk	Gk	Hk	Ik	Qk	Ak	Bk	Ck	Dk	Ek	Fk	Gk	Hk	Ik	Qk
1	0	0	0	0	0	0	0	5/√170	-5/√170	1	0	1	0	0	0	0	0	11/√170	-5/√170
1	0	0	0	0	0	0	1	5/√170	-7/√170	1	0	1	0	0	0	0	1	11/√170	-7/√170
1	0	0	0	0	0	1	0	7/√170	-5/√170	1	0	1	0	0	0	1	0	9/√170	-5/√170
1	0	0	0	0	0	1	1	7/√170	-7/√170	1	0	1	0	0	0	1	1	9/√170	-7/√170
1	0	0	0	0	1	0	0	5/√170	-3/√170	1	0	1	0	0	1	0	0	11/√170	-3/√170
1	0	0	0	0	1	0	1	5/√170	-1/√170	1	0	1	0	0	1	0	1	11/√170	-1/√170
1	0	0	0	0	1	1	0	7/√170	-3/√170	1	0	1	0	0	1	1	0	9/√170	-3/√170
1	0	0	0	0	1	1	1	7/√170	-1/√170	1	0	1	0	0	1	1	1	9/√170	-1/√170
1	0	0	0	1	0	0	0	3/√170	-5/√170	1	0	1	0	1	0	0	0	13/√170	-5/√170
1	0	0	0	1	0	0	1	3/√170	-7/√170	1	0	1	0	1	0	0	1	13/√170	-7/√170
1	0	0	0	1	0	1	0	1/√170	-5/√170	1	0	1	0	1	0	1	0	15/√170	-5/√170
1	0	0	0	1	0	1	1	1/√170	-7/√170	1	0	1	0	1	0	1	1	15/√170	-7/√170
1	0	0	0	1	1	0	0	3/√170	-3/√170	1	0	1	0	1	1	0	0	13/√170	-3/√170
1	0	0	0	1	1	0	1	3/√170	-1/√170	1	0	1	0	1	1	0	1	13/√170	-1/√170
1	0	0	0	1	1	1	0	1/√170	-3/√170	1	0	1	0	1	1	1	0	15/√170	-3/√170
1	0	0	0	1	1	1	1	1/√170	-1/√170	1	0	1	0	1	1	1	1	15/√170	-1/√170
1	0	0	1	0	0	0	0	5/√170	-11/√170	1	0	1	1	0	0	0	0	11/√170	-11/√170
1	0	0	1	0	0	0	1	5/√170	-9/√170	1	0	1	1	0	0	0	1	11/√170	-9/√170
1	0	0	1	0	0	1	0	7/√170	-11/√170	1	0	1	1	0	0	1	0	9/√170	-11/√170
1	0	0	1	0	0	1	1	7/√170	-9/√170	1	0	1	1	0	0	1	1	9/√170	-9/√170
1	0	0	1	0	1	0	0	5/√170	-13/√170	1	0	1	1	0	1	0	0	11/√170	-13/√170
1	0	0	1	0	1	0	1	5/√170	-15/√170	1	0	1	1	0	1	0	1	11/√170	-15/√170
1	0	0	1	0	1	1	0	7/√170	-13/√170	1	0	1	1	0	1	1	0	9/√170	-13/√170
1	0	0	1	0	1	1	1	7/√170	-15/√170	1	0	1	1	0	1	1	1	9/√170	-15/√170
1	0	0	1	1	0	0	0	3/√170	-11/√170	1	0	1	1	1	0	0	0	13/√170	-11/√170
1	0	0	1	1	0	0	1	3/√170	-9/√170	1	0	1	1	1	0	0	1	13/√170	-9/√170
1	0	0	1	1	0	1	0	1/√170	-11/√170	1	0	1	1	1	0	1	0	15/√170	-11/√170
1	0	0	1	1	0	1	1	1/√170	-9/√170	1	0	1	1	1	0	1	1	15/√170	-9/√170
1	0	0	1	1	1	0	0	3/√170	-13/√170	1	0	1	1	1	1	0	0	13/√170	-13/√170
1	0	0	1	1	1	0	1	3/√170	-15/√170	1	0	1	1	1	1	0	1	13/√170	-15/√170
1	0	0	1	1	1	1	0	1/√170	-13/√170	1	0	1	1	1	1	1	0	15/√170	-13/√170
1	0	0	1	1	1	1	1	1/√170	-15/√170	1	0	1	1	1	1	1	1	15/√170	-15/√170

Ak	Bk	Ck	Dk	Ek	Fk	Gk	Hk	Ik	Qk	Ak	Bk	Ck	Dk	Ek	Fk	Gk	Hk	Ik	Qk
1	1	0	0	0	0	0	0	5/√170	5/√170	1	1	1	0	0	0	0	0	11/√170	5/√170
1	1	0	0	0	0	0	1	5/√170	7/√170	1	1	1	0	0	0	0	1	11/√170	7/√170
1	1	0	0	0	0	1	0	7/√170	5/√170	1	1	1	0	0	0	1	0	9/√170	5/√170
1	1	0	0	0	0	1	1	7/√170	7/√170	1	1	1	0	0	0	1	1	9/√170	7/√170
1	1	0	0	0	1	0	0	5/√170	3/√170	1	1	1	0	0	1	0	0	11/√170	3/√170
1	1	0	0	0	1	0	1	5/√170	1/√170	1	1	1	0	0	1	0	1	11/√170	1/√170
1	1	0	0	0	1	1	0	7/√170	3/√170	1	1	1	0	0	1	1	0	9/√170	3/√170
1	1	0	0	0	1	1	1	7/√170	1/√170	1	1	1	0	0	1	1	1	9/√170	1/√170
1	1	0	0	1	0	0	0	3/√170	5/√170	1	1	1	0	1	0	0	0	13/√170	5/√170
1	1	0	0	1	0	0	1	3/√170	7/√170	1	1	1	0	1	0	0	1	13/√170	7/√170
1	1	0	0	1	0	1	0	1/√170	5/√170	1	1	1	0	1	0	1	0	15/√170	5/√170
1	1	0	0	1	0	1	1	1/√170	7/√170	1	1	1	0	1	0	1	1	15/√170	7/√170
1	1	0	0	1	1	0	0	3/√170	3/√170	1	1	1	0	1	1	0	0	13/√170	3/√170
1	1	0	0	1	1	0	1	3/√170	1/√170	1	1	1	0	1	1	0	1	13/√170	1/√170
1	1	0	0	1	1	1	0	1/√170	3/√170	1	1	1	0	1	1	1	0	15/√170	3/√170
1	1	0	0	1	1	1	1	1/√170	1/√170	1	1	1	0	1	1	1	1	15/√170	1/√170
1	1	0	1	0	0	0	0	5/√170	11/√170	1	1	1	1	0	0	0	0	11/√170	11/√170
1	1	0	1	0	0	0	1	5/√170	9/√170	1	1	1	1	0	0	0	1	11/√170	9/√170
1	1	0	1	0	0	1	0	7/√170	11/√170	1	1	1	1	0	0	1	0	9/√170	11/√170
1	1	0	1	0	0	1	1	7/√170	9/√170	1	1	1	1	0	0	1	1	9/√170	9/√170
1	1	0	1	0	1	0	0	5/√170	13/√170	1	1	1	1	0	1	0	0	11/√170	13/√170
1	1	0	1	0	1	0	1	5/√170	15/√170	1	1	1	1	0	1	0	1	11/√170	15/√170
1	1	0	1	0	1	1	0	7/√170	13/√170	1	1	1	1	0	1	1	0	9/√170	13/√170
1	1	0	1	0	1	1	1	7/√170	15/√170	1	1	1	1	0	1	1	1	9/√170	15/√170
1	1	0	1	1	0	0	0	3/√170	11/√170	1	1	1	1	1	0	0	0	13/√170	11/√170
1	1	0	1	1	0	0	1	3/√170	9/√170	1	1	1	1	1	0	0	1	13/√170	9/√170
1	1	0	1	1	0	1	0	1/√170	11/√170	1	1	1	1	1	0	1	0	15/√170	11/√170
1	1	0	1	1	0	1	1	1/√170	9/√170	1	1	1	1	1	0	1	1	15/√170	9/√170
1	1	0	1	1	1	0	0	3/√170	13/√170	1	1	1	1	1	1	0	0	13/√170	13/√170
1	1	0	1	1	1	0	1	3/√170	15/√170	1	1	1	1	1	1	0	1	13/√170	15/√170
1	1	0	1	1	1	1	0	1/√170	13/√170	1	1	1	1	1	1	1	0	15/√170	13/√170
1	1	0	1	1	1	1	1	1/√170	15/√170	1	1	1	1	1	1	1	1	15/√170	15/√170

(2) The signal space diagram is shown in figure below.

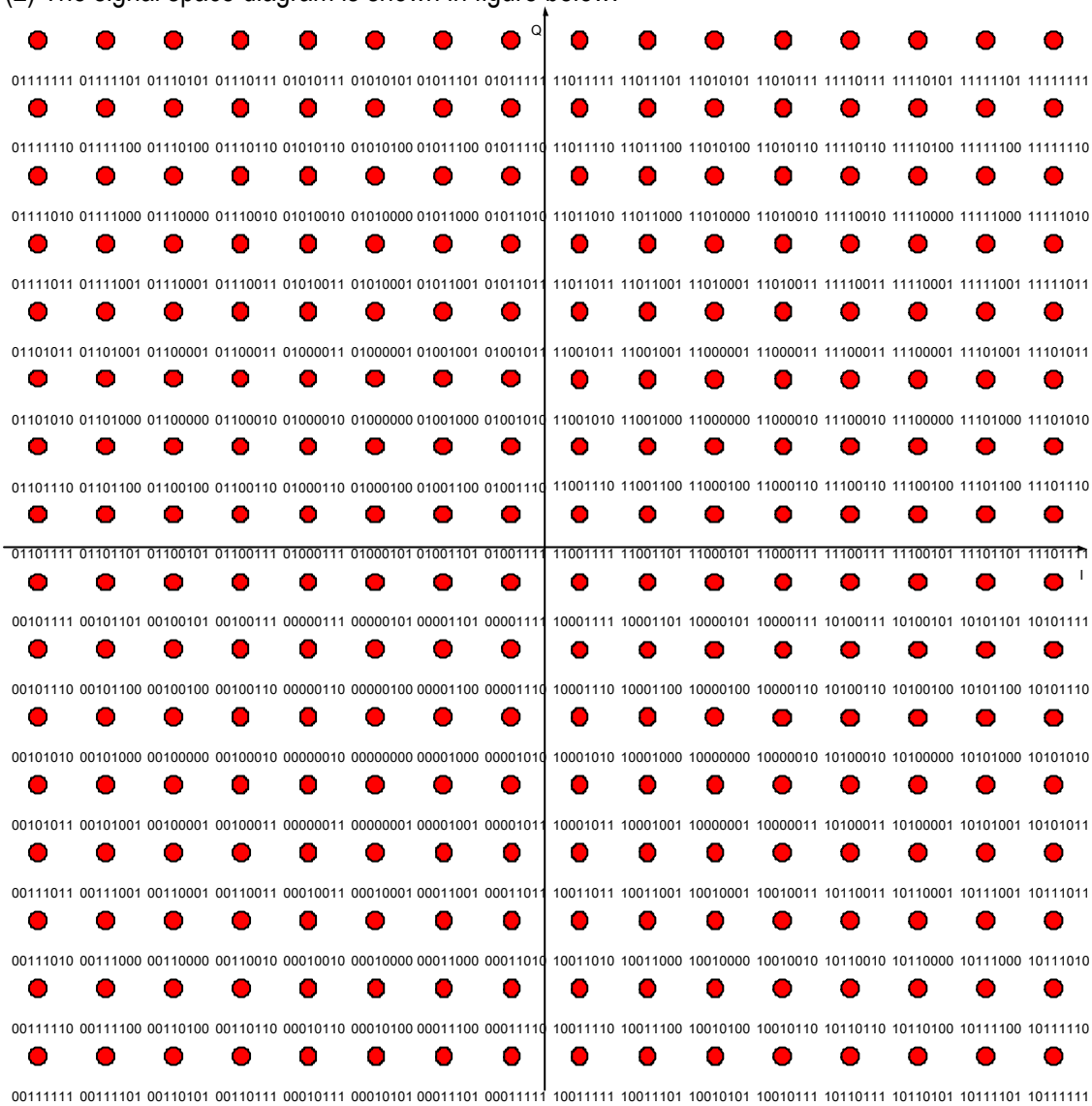

Figure B.8 256QAM

B.9 16PSK

The signal space diagram for 16PSK is shown in Figure B.9. 16PSK is only used for training sequences for SC.

Ak	Ik	Qk
a	1	0
b	0.923879533	0.382683432
c	0.707106781	0.707106781
d	0.382683432	0.923879533
e	0	1
f	-0.382683432	0.923879533
g	-0.707106781	0.707106781
h	-0.923879533	0.382683432
i	-1	0
j	-0.923879533	-0.382683432
k	-0.707106781	-0.707106781
l	-0.382683432	-0.923879533
m	0	-1
n	0.382683432	-0.923879533
o	0.707106781	-0.707106781
p	0.923879533	-0.382683432

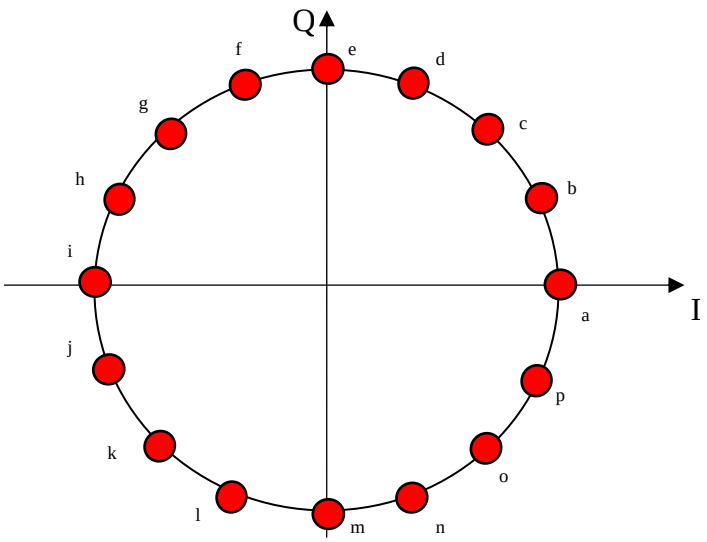

Figure B.9 16PSK

B.10 Optional Modulation Method

B.10.1 BPSK

(1) The serial signal input is converted to (Ak) symbols by the serial/parallel converter and then changed to corresponding signals (Ik, Qk) by the encoder. Conversion from serial signal input to (Ak) (binary/binary conversion) is performed as noted below, and conversion from (Ak) to (Ik, Qk) is performed according to the table below.

Binary Data Time Series ■ ■ ■ an-1 an an+1 ■ ■ ■

↓

Symbol Time Series (an)

↓

Ak

Ak	Ik	Qk
1	$-1/\sqrt{2}$	$-1/\sqrt{2}$
0	$1/\sqrt{2}$	$1/\sqrt{2}$

(2) The signal space diagram is shown in figure below.

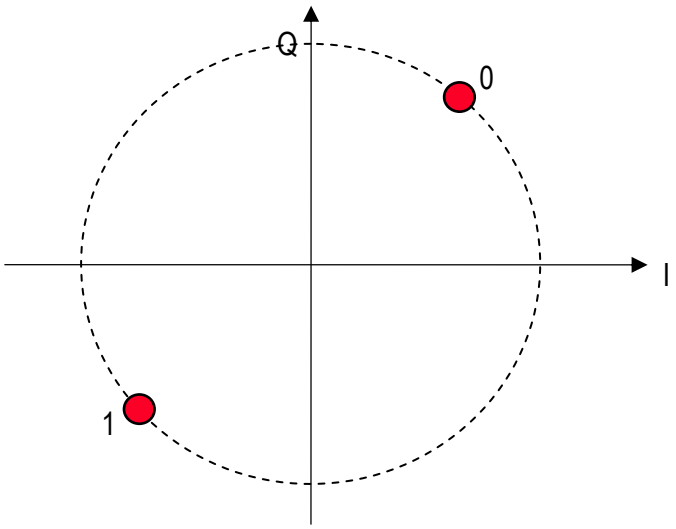

Figure B.10.1 BPSK

B.10.2 QPSK

(1) The serial signal input is converted to (Ak, Bk) symbols by the serial/parallel converter and then changed to corresponding signals (Ik, Qk) by the encoder. Conversion from serial signal input to (Ak, Bk) (binary/quaternary conversion) is performed as noted below, and conversion from (Ak, Bk) to (Ik, Qk) is performed according to the table below.

Binary Data Time Series ■ ■ ■ an-1 an an+1 ■ ■ ■

↓ ↓ ↓

Symbol Time Series (an, an+1)

↓ ↓

Ak Bk

Ak	Bk	Ik	Qk
0	0	1/√2	1/√2
0	1	1/√2	-1/√2
1	0	-1/√2	1/√2
1	1	-1/√2	-1/√2

(2) The signal space diagram is shown in the figure below.

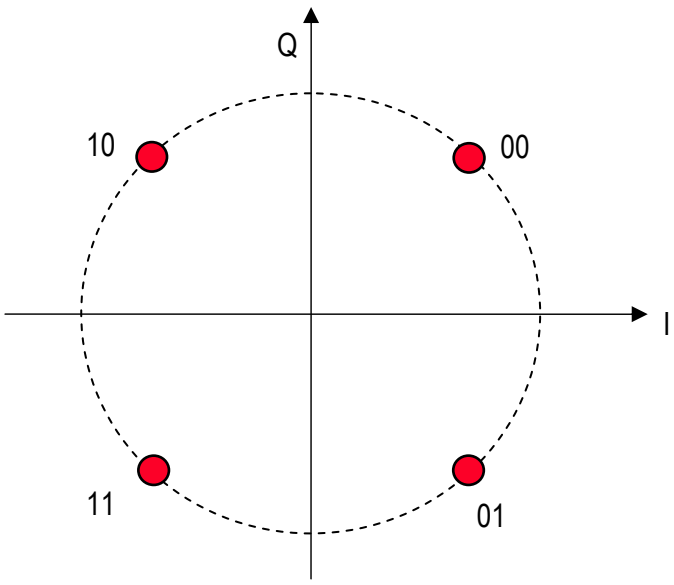

Figure B.10.2 QPSK

B.10.3 16QAM

(1) The serial signal input is converted to (Ak, Bk, Ck, Dk) symbols by the serial/parallel converter and then changed to corresponding signals (Ik, Qk) by the encoder. Conversion from serial signal input to (Ak, Bk, Ck, Dk) (binary/16ary conversion) is performed as noted below, and conversion from (Ak, Bk, Ck, Dk) to (Ik, Qk) is performed according to the table below.

Binary Data Time Series	■ ■ ■	an-1	an	an+1	an+2	an+3	■ ■ ■
↓			↓	↓	↓	↓	
Symbol Time Series				(an,	an+1, an+2,	an+3)	
			↓	↓	↓	↓	
			Ak	Bk	Ck	Dk	

Ak	Bk	Ck	Dk	Ik	Qk
0	0	0	0	$1/\sqrt{10}$	$1/\sqrt{10}$
0	0	0	1	$1/\sqrt{10}$	$3/\sqrt{10}$
0	0	1	0	$3/\sqrt{10}$	$1/\sqrt{10}$
0	0	1	1	$3/\sqrt{10}$	$3/\sqrt{10}$
0	1	0	0	$1/\sqrt{10}$	$-1/\sqrt{10}$
0	1	0	1	$1/\sqrt{10}$	$-3/\sqrt{10}$
0	1	1	0	$3/\sqrt{10}$	$-1/\sqrt{10}$
0	1	1	1	$3/\sqrt{10}$	$-3/\sqrt{10}$
1	0	0	0	$-1/\sqrt{10}$	$1/\sqrt{10}$
1	0	0	1	$-1/\sqrt{10}$	$3/\sqrt{10}$
1	0	1	0	$-3/\sqrt{10}$	$1/\sqrt{10}$
1	0	1	1	$-3/\sqrt{10}$	$3/\sqrt{10}$
1	1	0	0	$-1/\sqrt{10}$	$-1/\sqrt{10}$
1	1	0	1	$-1/\sqrt{10}$	$-3/\sqrt{10}$
1	1	1	0	$-3/\sqrt{10}$	$-1/\sqrt{10}$
1	1	1	1	$-3/\sqrt{10}$	$-3/\sqrt{10}$

(2) The signal space diagram is shown in figure below.

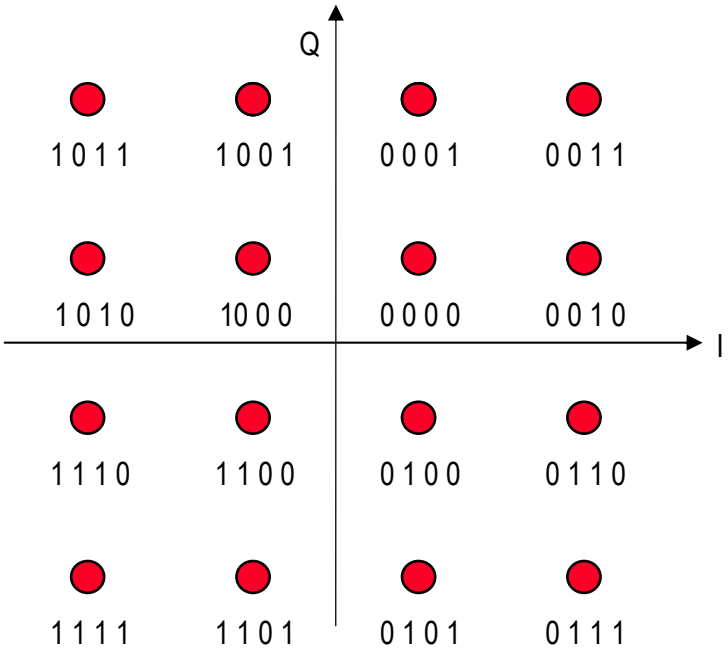

Figure B.10.3 16QAM

B.10.4 64QAM

(1) The serial signal input is converted to (Ak, Bk, Ck, Dk, Ek, Fk) symbols by the serial/parallel converter and then changed to corresponding signals (Ik, Qk) by the encoder. Conversion from serial signal input to (Ak, Bk, Ck, Dk, Ek, Fk) (binary/64ary conversion) is performed as noted below, and conversion from (Ak, Bk, Ck, Dk, Ek, Fk) to (Ik, Qk) is performed according to the table below.

Binary Data Time Series ■ ■ ■ an an+1 an+2 an+3 an+4 an+5 ■ ■ ■

↓ ↓ ↓ ↓ ↓ ↓ ↓

Symbol Time Series (an, an+1, an+2, an+3, an+4, an+5)

↓ ↓ ↓ ↓ ↓ ↓

Ak Bk Ck Dk Ek Fk

Ak	Bk	Ck	Dk	Ek	Fk	Ik	Qk
0	0	0	0	0	0	3/√42	3/√42
0	0	0	0	0	1	3/√42	1/√42
0	0	0	0	1	0	1/√42	3/√42
0	0	0	0	1	1	1/√42	1/√42
0	0	0	1	0	0	3/√42	5/√42
0	0	0	1	0	1	3/√42	7/√42
0	0	0	1	1	0	1/√42	5/√42
0	0	0	1	1	1	1/√42	7/√42
0	0	1	0	0	0	5/√42	3/√42
0	0	1	0	0	1	5/√42	1/√42
0	0	1	0	1	0	7/√42	3/√42
0	0	1	0	1	1	7/√42	1/√42
0	0	1	1	0	0	5/√42	5/√42
0	0	1	1	0	1	5/√42	7/√42
0	0	1	1	1	0	7/√42	5/√42
0	0	1	1	1	1	7/√42	7/√42
0	1	0	0	0	0	3/√42	-3/√42
0	1	0	0	0	1	3/√42	-1/√42
0	1	0	0	1	0	1/√42	-3/√42

0	1	0	0	1	1	1/√42	-1/√42
0	1	0	1	0	0	3/√42	-5/√42
0	1	0	1	0	1	3/√42	-7/√42
0	1	0	1	1	0	1/√42	-5/√42
0	1	0	1	1	1	1/√42	-7/√42
0	1	1	0	0	0	5/√42	-3/√42
0	1	1	0	0	1	5/√42	-1/√42
0	1	1	0	1	0	7/√42	-3/√42
0	1	1	0	1	1	7/√42	-1/√42
0	1	1	1	0	0	5/√42	-5/√42
0	1	1	1	0	1	5/√42	-7/√42
0	1	1	1	1	0	7/√42	-5/√42
0	1	1	1	1	1	7/√42	-7/√42
1	0	0	0	0	0	-3/√42	3/√42
1	0	0	0	0	1	-3/√42	1/√42
1	0	0	0	1	0	-1/√42	3/√42
1	0	0	0	1	1	-1/√42	1/√42
1	0	0	1	0	0	-3/√42	5/√42
1	0	0	1	0	1	-3/√42	7/√42
1	0	0	1	1	0	-1/√42	5/√42
1	0	0	1	1	1	-1/√42	7/√42
1	0	1	0	0	0	-5/√42	3/√42
1	0	1	0	0	1	-5/√42	1/√42
1	0	1	0	1	0	-7/√42	3/√42
1	0	1	0	1	1	-7/√42	1/√42
1	0	1	1	0	0	-5/√42	5/√42
1	0	1	1	0	1	-5/√42	7/√42
1	0	1	1	1	0	-7/√42	5/√42
1	0	1	1	1	1	-7/√42	7/√42
1	1	0	0	0	0	-3/√42	-3/√42
1	1	0	0	0	1	-3/√42	-1/√42
1	1	0	0	1	0	-1/√42	-3/√42
1	1	0	0	1	1	-1/√42	-1/√42
1	1	0	1	0	0	-3/√42	-5/√42
1	1	0	1	0	1	-3/√42	-7/√42
1	1	0	1	1	0	-1/√42	-5/√42

1	1	0	1	1	1	-1/√42	-7/√42
1	1	1	0	0	0	-5/√42	-3/√42
1	1	1	0	0	1	-5/√42	-1/√42
1	1	1	0	1	0	-7/√42	-3/√42
1	1	1	0	1	1	-7/√42	-1/√42
1	1	1	1	0	0	-5/√42	-5/√42
1	1	1	1	0	1	-5/√42	-7/√42
1	1	1	1	1	0	-7/√42	-5/√42
1	1	1	1	1	1	-7/√42	-7/√42

(2) The signal space diagram is shown in the figure below.

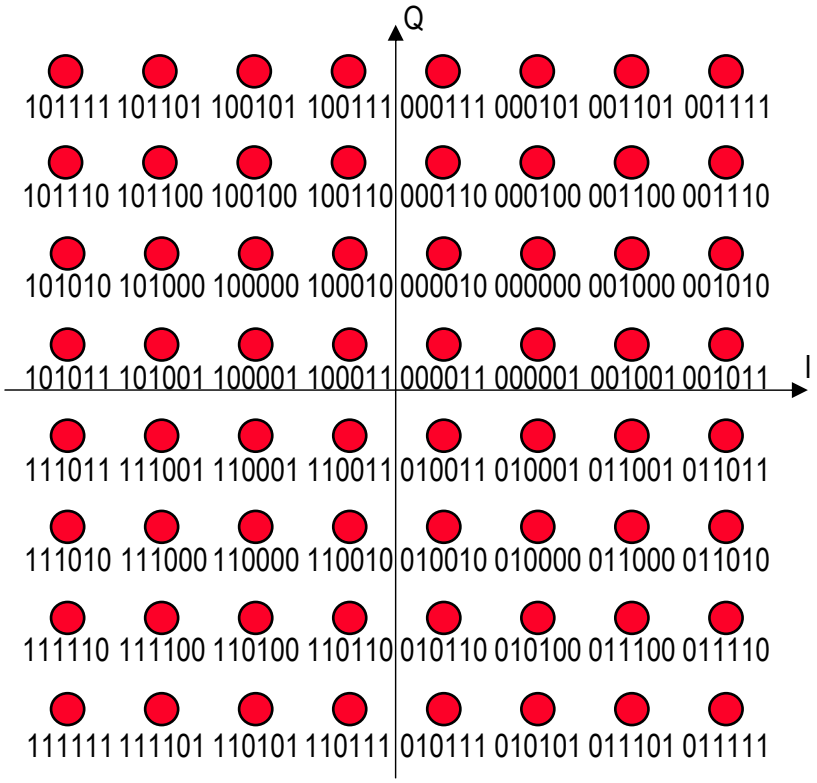

Figure B.10.4 64QAM

Appendix C: Training Sequence

C.1 OFDM Training Sequence

The training sequence for OFDM is shown in Table C.1, Table C.2 and Table C.3. These tables are referred to in Section 3.4.2.

Table C.1 Training Pattern (1 – 4)

Subcarrier Number	Core-Sequence							
	Core-Seq 1		Core-Seq 2		Core-Seq 3		Core-Seq 4	
	I	Q	I	Q	I	Q	I	Q
1	0	0	0	0	0	0	0	0
2	-1	1	-1	1	1	-1	1	1
3	1	1	-1	1	1	-1	1	-1
4	1	1	-1	1	-1	-1	1	-1
5	-1	1	-1	-1	1	-1	-1	-1
6	-1	-1	-1	1	1	-1	-1	1
7	1	1	1	1	1	1	-1	-1
8	-1	1	1	-1	-1	1	-1	1
9	1	1	-1	1	1	1	-1	-1
10	-1	-1	1	-1	1	-1	-1	-1
11	1	-1	-1	1	-1	1	-1	1
12	1	-1	-1	-1	1	-1	1	-1
13	0	0	0	0	0	0	0	0
14	-1	-1	-1	1	1	1	-1	1
15	1	1	1	1	-1	1	1	-1
16	1	-1	1	1	-1	1	-1	1
17	-1	-1	-1	1	1	1	-1	1
18	1	1	-1	-1	1	-1	-1	1
19	1	1	1	1	-1	1	-1	1
20	-1	-1	-1	1	1	-1	1	1
21	1	-1	1	1	1	-1	-1	-1
22	-1	1	-1	-1	-1	-1	1	-1
23	1	1	1	-1	1	-1	-1	1
24	-1	1	1	-1	1	1	-1	1

Note: In case of QPSK, 1 → 1/√2 , -1 → -1/√2

Table C.2 Training Pattern (5 - 8)

Subcarrier Number	Core-Sequence							
	Core-Seq 5		Core-Seq 6		Core-Seq 7		Core-Seq 8	
	I	Q	I	Q	I	Q	I	Q
1	0	0	0	0	0	0	0	0
2	1	1	-1	-1	1	1	1	-1
3	-1	1	-1	-1	1	1	-1	1
4	-1	1	1	-1	-1	-1	-1	-1
5	1	1	-1	1	1	-1	-1	-1
6	1	-1	-1	-1	1	-1	1	-1
7	-1	1	1	1	-1	-1	1	-1
8	1	-1	1	-1	1	1	1	-1
9	1	-1	-1	1	1	1	-1	-1
10	-1	-1	1	-1	1	1	-1	1
11	1	-1	1	-1	-1	-1	1	1
12	1	1	-1	-1	-1	1	-1	-1
13	0	0	0	0	0	0	0	0
14	1	1	1	1	1	-1	-1	1
15	1	-1	1	-1	1	-1	-1	1
16	1	1	1	-1	-1	-1	-1	1
17	1	-1	-1	-1	1	-1	-1	-1
18	-1	-1	-1	1	1	-1	-1	1
19	1	1	-1	-1	1	1	1	1
20	1	1	-1	1	-1	1	1	-1
21	1	-1	-1	-1	1	1	-1	1
22	1	1	-1	-1	1	-1	1	-1
23	-1	-1	-1	1	-1	1	-1	1
24	1	-1	1	-1	1	-1	-1	-1

Note: In case of QPSK, 1 → 1/√2 , -1 → -1/√2

Table C.3 Training Pattern (9 – 12)

Subcarrier Number	Core-Sequence							
	Core-Seq 9		Core-Seq 10		Core-Seq 11		Core-Seq 12	
	I	Q	I	Q	I	Q	I	Q
1	0	0	0	0	0	0	0	0
2	-1	-1	-1	-1	-1	-1	-1	1
3	1	-1	1	-1	1	1	1	-1
4	1	1	-1	-1	1	-1	-1	1
5	1	-1	1	-1	-1	-1	-1	1
6	-1	1	-1	1	1	1	-1	1
7	1	1	-1	1	1	1	-1	1
8	-1	1	1	1	-1	-1	1	1
9	-1	-1	1	1	1	-1	-1	-1
10	1	-1	-1	1	-1	1	1	-1
11	-1	-1	-1	1	1	1	-1	1
12	-1	1	1	-1	-1	1	-1	1
13	0	0	0	0	0	0	0	0
14	1	1	1	-1	-1	-1	1	1
15	1	-1	-1	1	1	-1	1	-1
16	-1	1	-1	-1	-1	-1	-1	1
17	-1	1	-1	-1	1	-1	-1	-1
18	1	1	1	-1	-1	1	1	1
19	-1	-1	1	-1	-1	1	-1	1
20	1	1	1	-1	1	1	-1	1
21	1	1	-1	-1	1	1	1	-1
22	-1	-1	-1	1	-1	1	1	-1
23	1	-1	1	1	-1	1	1	-1
24	-1	-1	-1	-1	1	-1	1	1

Note: In case of QPSK, 1 → 1/√2 , -1 → -1/√2

Offset value for OFDM training sequence is shown in Table C.4. This table is referred to in Section 3.4.2.

Table C.4 Offset Value for OFDM Training Sequence

System Bandwidth [MHz]	2.5	5	10	20
FFT Size	64	128	256	512
Offset Value 1(X sample)	0	0	0	0
Offset Value 2(X sample)	32	64	128	256
Offset Value 3(X sample)		32	64	128
Offset Value 4(X sample)		96	192	384
Offset Value 5(X sample)			32	64
Offset Value 6(X sample)			96	192
Offset Value 7(X sample)			160	320
Offset Value 8(X sample)			224	448
Offset Value 9(X sample)			16	32
Offset Value 10(X sample)			48	96
Offset Value 11(X sample)				160
Offset Value 12(X sample)				224
Offset Value 13(X sample)				288
Offset Value 14(X sample)				352
Offset Value 15(X sample)				416
Offset Value 16(X sample)				480
Offset Value 17(X sample)				16
Offset Value 18(X sample)				48
Offset Value 19(X sample)				80
Offset Value 20(X sample)				112

Training signals of the offset value are calculated by following equation.

$$\theta = 2\pi \times (\text{SubcarrierNumber}[1 \text{ to } 24] - 13) \times \text{Offsetvalue}/\text{FFTsize}$$
$$(I,Q) = (\text{ICore-Seq}, \text{QCore-Seq}) * (\cos\theta, \sin\theta) \qquad \text{(C.1)}$$

For example, Table C.5 shows the calculated results when core-sequence number is 1 and FFT size is 512 and offset sample is 128.

Table C.5 The Calculated Example When Core-sequence Number is 1, FFT Size Is 512 and Offset Sample is 128

Subcarrier Number	Core-Sequence Core-Seq 1		Using Guard Carrier		Offset Sample 128	
	I	Q	I	Q	I	Q
1	0	0	1	-1	1	-1
2	-1	1	-1	1	-1	-1
3	1	1	1	1	-1	-1
4	1	1	1	1	1	-1
5	-1	1	-1	1	-1	1
6	-1	-1	-1	-1	1	-1
7	1	1	1	1	-1	-1
8	-1	1	-1	1	1	1
9	1	1	1	1	1	1
10	-1	-1	-1	-1	1	-1
11	1	-1	1	-1	-1	1
12	1	-1	1	-1	-1	-1
13	0	0	0	0	0	0
14	-1	-1	-1	-1	1	-1
15	1	1	1	1	-1	-1
16	1	-1	1	-1	-1	-1
17	-1	-1	-1	-1	-1	-1
18	1	1	1	1	-1	1
19	1	1	1	1	-1	-1
20	-1	-1	-1	-1	-1	1
21	1	-1	1	-1	1	-1
22	-1	1	-1	1	-1	-1
23	1	1	1	1	-1	-1
24	-1	1	-1	1	1	1

Note: In this case, “1” => “1/√2” , “-1” => “-1/√2”

As shown in Table C.5, if guard carrier with subcarrier number 1 is used, it will be copied to subcarrier number 12 of core-sequence. Then, this calculation is carried out per PRU.

C.2 SC Training Sequence

Training sequences of the length when N is 16 for the pilot block S9 of CSCH are shown in Table C.6. This is also referred to in Section 3.6.2. Training sequences of the length when N is 16 are shown in Table C.7. Parameters to generate training sequences for N as 32, 64, 128 and 256 are shown in Table C.8 to Table C.11, respectively. Using these parameters, training sequence of length N, [t(1),t(2),…,t(n),..,t(N)], is defined as follows:

$$t(n) = \exp(j\pi r((n-1)^2-k^2)/N)*b(k+1) \quad \text{,where } k = (n-1) \text{ MOD } m \qquad \text{(C.2)}$$

Training sequences for SC are referred to in Section 3.6.2.

Table C.6 Training Sequence for Pilot with Signal of CSCH (N=16)

Symbol Number	Core-Sequence Number							
	1	2	3	4	5	6	7	8
1	A0	A0	A0	A0	A0	A0	A0	A0
2	A1	A1	A1	A1	A0	A0	A0	A0
3	A0	A0	A2	A4	A1	A1	A5	A5
4	A3	A7	A5	A3	A3	A7	A3	A7
5	A4	A4	A0	A4	A6	A6	A6	A6
6	A1	A1	A5	A1	A2	A2	A2	A2
7	A4	A4	A2	A0	A7	A7	A3	A3
8	A3	A7	A1	A3	A5	A1	A5	A1
9	A0	A0	A0	A0	A4	A4	A4	A4
10	A1	A1	A1	A1	A4	A4	A4	A4
11	A0	A0	A2	A4	A5	A5	A1	A1
12	A3	A7	A5	A3	A7	A3	A7	A3
13	A4	A4	A0	A4	A2	A2	A2	A2
14	A1	A1	A5	A1	A6	A6	A6	A6
15	A4	A4	A2	A0	A3	A3	A7	A7
16	A3	A7	A1	A3	A1	A5	A1	A5

Note: Ai is on the 8PSK constellation. Ai = exp(jπ*i/4)

Table C.7 Training Sequence (N=16)

Symbol Number	Core-Sequence Number							
	1	2	3	4	5	6	7	8
1	A0	A0	A0	A0	A0	A0	A0	A0
2	A1	A1	A1	A1	A1	A1	A1	A1
3	A0	A0	A0	A0	A0	A0	A0	A0
4	A1	A1	A1	A1	A1	A1	A5	A5
5	A0	A0	A0	A0	A0	A0	A0	A0
6	A3	A3	A5	A5	A7	A7	A3	A3
7	A4	A6	A2	A6	A2	A4	A4	A6
8	A7	A5	A7	A3	A5	A3	A3	A1
9	A0	A0	A0	A0	A0	A0	A0	A0
10	A5	A5	A1	A1	A5	A5	A5	A5
11	A0	A4	A4	A4	A4	A0	A0	A4
12	A5	A1	A5	A5	A1	A5	A1	A5
13	A0	A0	A0	A0	A0	A0	A0	A0
14	A7	A7	A5	A5	A3	A3	A7	A7
15	A4	A2	A6	A2	A6	A4	A4	A2
16	A3	A5	A3	A7	A5	A7	A7	A1

Note: Ai is on the 8PSK constellation. Ai = exp(jπ*i/4)

Table C.8 Training Sequence (N=32)

Parameters	Core-Sequence Number							
	1	2	3	4	5	6	7	8
m	4	4	4	4	4	4	4	4
r	1	1	3	3	5	5	7	7
b(1)	A0	A0	A0	A0	A0	A0	A0	A0
b(2)	A0	A0	A0	A0	A0	A0	A0	A0
b(3)	A0	A0	A0	A0	A0	A0	A0	A0
b(4)	A0	A4	A0	A4	A0	A4	A0	A4

Note: Ai is on the 8PSK constellation. Ai = exp(jπ*i/4)

Table C.9 Training Sequence (N=64)

Parameters	Core-Sequence Number							
	1	2	3	4	5	6	7	8
m	8	8	8	8	8	8	8	8
r	1	1	3	3	5	5	7	7
b(1)	A0	A0	A0	A0	A0	A0	A0	A0
b(2)	A0	A0	A0	A0	A0	A0	A0	A0
b(3)	A0	A0	A0	A0	A0	A0	A0	A0
b(4)	A0	A2	A0	A2	A0	A2	A0	A2
b(5)	A0	A4	A0	A4	A0	A4	A0	A4
b(6)	A0	A0	A0	A0	A0	A0	A0	A0
b(7)	A0	A4	A0	A4	A4	A0	A4	A0
b(8)	A0	A2	A0	A2	A0	A2	A0	A2

Note: Ai is on the 8PSK constellation. Ai = exp(jπ*i/4)

Table C.10 Training Sequence (N=128)

Parameters	Core-Sequence Number							
	1	2	3	4	5	6	7	8
m	8	8	8	8	8	8	8	8
r	1	3	5	7	9	11	13	15
b(1)	A0	A0	A0	A0	A0	A0	A0	A0
b(2)	A0	A0	A0	A0	A0	A0	A0	A0
b(3)	A0	A0	A0	A0	A0	A0	A0	A0
b(4)	A0	A0	A0	A0	A0	A0	A0	A0
b(5)	A0	A0	A0	A0	A0	A0	A0	A0
b(6)	A0	A0	A0	A0	A0	A0	A0	A0
b(7)	A0	A0	A0	A0	A8	A8	A8	A8
b(8)	A0	A0	A0	A0	A0	A0	A0	A0

Note: Ai is on the 16PSK constellation. Ai = exp(jπ*i/8)

Table C.11 Training Sequence (N=256)

Parameters	Core-Sequence Number							
	1	2	3	4	5	6	7	8
m	16	16	16	16	16	16	16	16
r	1	3	5	7	9	11	13	15
b(1)	A0	A0	A0	A0	A0	A0	A0	A0
b(2)	A0	A0	A0	A0	A0	A0	A0	A0
b(3)	A0	A0	A0	A0	A0	A0	A0	A0
b(4)	A0	A0	A0	A0	A0	A0	A0	A0
b(5)	A0	A0	A0	A0	A0	A0	A0	A0
b(6)	A0	A0	A0	A0	A0	A0	A0	A0
b(7)	A0	A0	A0	A0	A0	A0	A0	A0
b(8)	A0	A0	A0	A0	A0	A0	A0	A0
b(9)	A0	A0	A0	A0	A0	A0	A0	A0
b(10)	A0	A0	A0	A0	A4	A4	A4	A4
b(11)	A0	A0	A0	A0	A8	A8	A8	A8
b(12)	A0	A0	A0	A0	A0	A0	A0	A0
b(13)	A0	A0	A0	A0	A12	A12	A12	A12
b(14)	A0	A0	A0	A0	A4	A4	A4	A4
b(15)	A0	A0	A0	A0	A8	A8	A8	A8
b(16)	A0	A0	A0	A0	A8	A8	A8	A8

Note: Ai is on the 16PSK constellation. Ai = exp(jπ*i/8)

Offset value for SC training sequence is shown in Table C.12. This table is referred to in Section 3.6.2.

Table C.12 Offset Value for SC Training Sequence

Sequence Size: N [symbol]	16	16	32	64	128	256
	(Table C.6)	(Table C.7)				
Offset Value 1 [symbol]	0	0	0	0	0	0
Offset Value 2 [symbol]	4	8	16	32	64	128
Offset Value 3 [symbol]	2	4	8	16	32	64
Offset Value 4 [symbol]	6	12	24	48	96	192
Offset Value 5 [symbol]				8	16	32
Offset Value 6 [symbol]				40	80	160
Offset Value 7 [symbol]				24	48	96
Offset Value 8 [symbol]				56	112	224

Appendix D: TCCH Sequence

D.1 OFDM TCCH Sequence

TCCH sequence for OFDM is shown in Table D.1. This table is referred to in Sections 3.5.5 and 3.5.6.

Table D.1 TCCH Sequence for OFDM

Subcarrier Number	TCCH Sequence Number for OFDM					
	1	2	3	4	5	6
1	0	0	0	0	0	0
2	A7	A1	A5	A7	A7	A3
3	A5	A1	A3	A5	A7	A5
4	A1	A3	A5	A7	A5	A1
5	A3	A1	A5	A1	A3	A3
6	A1	A3	A7	A7	A7	A5
7	A3	A5	A7	A5	A3	A7
8	A5	A1	A5	A1	A3	A5
9	A1	A7	A3	A3	A5	A3
10	A5	A1	A5	A7	A3	A7
11	A5	A5	A5	A5	A3	A1
12	A7	A7	A7	A3	A1	A7
13	0	0	0	0	0	0
14	A7	A5	A7	A7	A3	A7
15	A1	A3	A7	A3	A1	A3
16	A5	A7	A1	A1	A3	A5
17	A7	A5	A5	A7	A7	A1
18	A7	A7	A1	A7	A1	A3
19	A1	A1	A1	A7	A5	A3
20	A1	A1	A7	A1	A5	A5
21	A1	A1	A7	A3	A5	A3
22	A3	A3	A3	A3	A5	A3
23	A1	A1	A5	A5	A7	A3
24	A3	A1	A7	A7	A3	A1

Note: Ai is on the QPSK constellation. Ai = exp(jπ*i/4)

D.2 SC TCCH sequence

TCCH sequence for SC is shown in Table D.2. This table is referred to in Section 3.6.6.

Table D.2 TCCH Sequence for SC

Symbol Number	Core-Sequence Number					
	1	2	3	4	5	6
1	A0	A0	A0	A0	A0	A0
2	A1	A1	A1	A1	A1	A1
3	A0	A0	A0	A0	A0	A0
4	A1	A1	A1	A1	A1	A1
5	A0	A0	A0	A0	A0	A0
6	A3	A3	A5	A5	A7	A7
7	A4	A6	A2	A6	A2	A4
8	A7	A5	A7	A3	A5	A3
9	A0	A0	A0	A0	A0	A0
10	A5	A5	A1	A1	A5	A5
11	A0	A4	A4	A4	A4	A0
12	A5	A1	A5	A5	A1	A5
13	A0	A0	A0	A0	A0	A0
14	A7	A7	A5	A5	A3	A3
15	A4	A2	A6	A2	A6	A4
16	A3	A5	A3	A7	A5	A7

Note: Ai is on the 8PSK constellation. Ai = exp(jπ*i/4)

Appendix E: Network Interface Requirements

E.1 Overview

In this appendix, the network functions, which are required in XGP, are described. The network model for XGP is shown in Figure E.1. Despite that its network interface for packet layer should be kept flexible, the XGP network itself should be regarded as Next Generation Network (NGN).

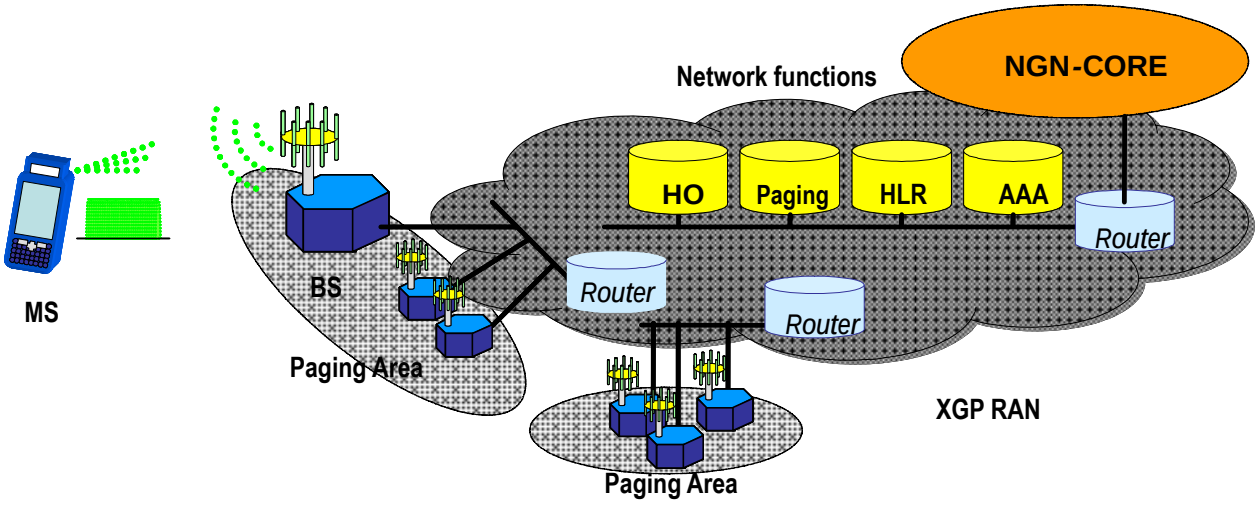

Figure E.1 Network Model for XGP

E.2 Network Functions

The following functions are defined by the XGP radio access network: 1) paging-function, 2) Home location register (HLR)-function, 3) Handover (HO)-function, 4) Authentication, authorization and accounting (AAA)-function. Each function is descried as followings.

E.2.1 Paging Function

XGP keeps the paging function as Original PHS has. Paging area consists of several BS and MS, which will either enter the area or switch BS in the area, and register its location to location register. When the MS is paged, all BSs in this paging area can be applied in transmitting the paging message.

E.2.1.1 Paging Area

Paging area is an area consisting of several BSs. The BS belonging to one paging area must share the same features about channel structure, system information, etc. Every BS is included in a certain paging group. Network controls the BS and its paging area number.

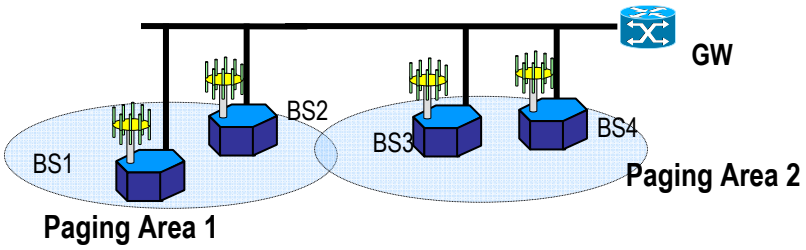

Figure E.2 Structure of Paging Area

E.2.1.2 The Recognition of Paging Area

The MS can distinguish a paging area from BSID which is transmitted by BS. Paging area number is indicated by n_P bits in BSID shown in Figure E.3.

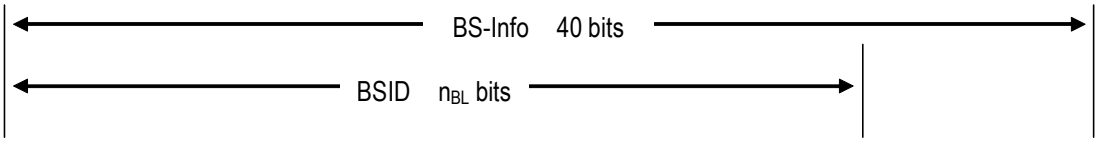

System Type	Operator ID	System Additional ID		BS Additional ID
1 bit	3 bits	Paging Area Number n_p bits	Sequence Number $n_{BL} - n_p - 4$ bits	40 - n_{BL} bits

Figure E.3 Broadcasting of System Information by Common Channel

BS notifies the superframe structure of the XGP system, the transceiver timing of LCCH, etc. of the whole paging area to MS.

E.2.1.3 Paging Group

MS determines its own paging group and receives PCH of the paging group. The information on MS, including MSID, etc, are notified by PCH. Intermittent control for MS as shown in Figure E.4 is possible. In this example, the paging group of this MS is assigned to 2, and MS only receives the PCH 2 for paging.

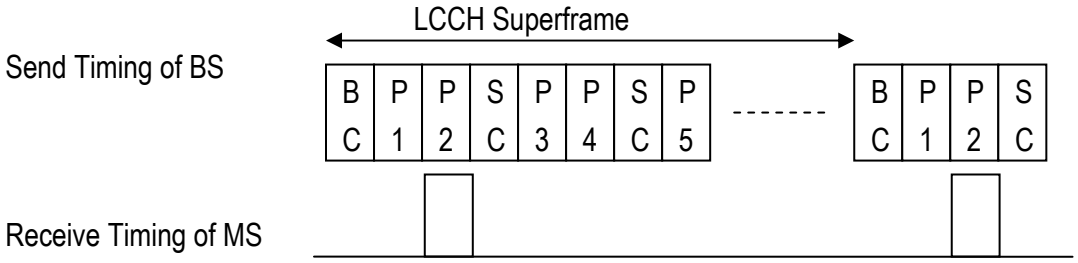

P X: PCH X, BC: BCCH, SC: SCCH,

Figure E.4 An Intermittent Receipt of PCH (When It Belongs to PCH 2)

E.2.1.4 Incoming Call

If the MS in a paging area has incoming-call from a network, BS will report an incoming message to MS using PCH. On the other hand, MS receives an incoming message from the PCH of the paging group to which the MS belongs. Then radio link is established to BS and the acknowledgement to the incoming message is returned.

E.2.2 Home Location Register (HLR) Function

Home location register (HLR), has the function to control the location information for each MS. When the power of MS is on, or when the MS is moved into another paging area, the location registration will be activated to report the paging area, where MS is now standby. HLR controls all MS location. When an MS is paged, HLR will control the paging message to the paging area, where this MS has made the last location registration.

E.2.3 Handover Functions

Handover function in XGP realizes the switch of MS link connection from one BS to another BS. When an MS is carried from the original BS to the destination BS, temporary link with the MS is established to both BSs. Meanwhile, a new network link to the destination BS is established. By transferring the information such as IP session and user authentication information to the destination BS network, the old link for original BS in network will be disconnected.

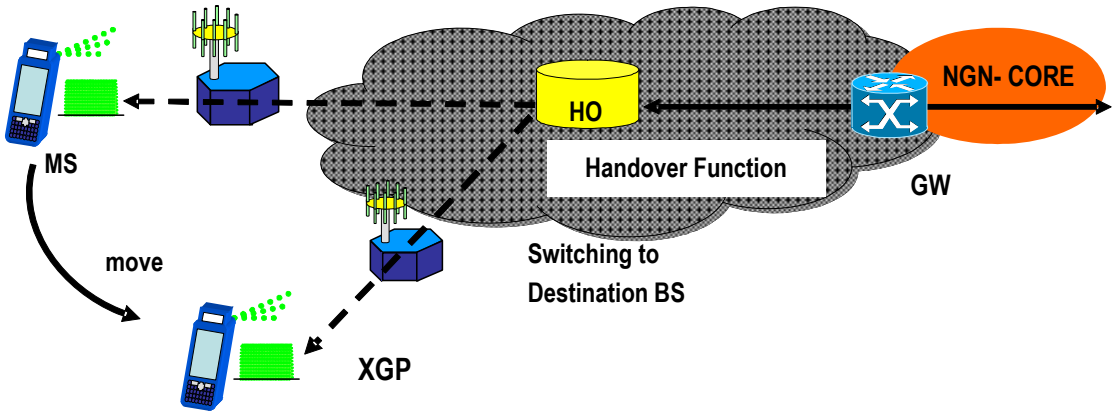

Figure E.5 Handover Function of XGP network

E.2.4 Authentication Authorization Accounting (AAA) Function

Network has the authentication authorization and accounting function for MS or equipment terminals, which access the network. This authentication function is classified to equipments, users and services, according to the system service criteria.

E.2.4.1 Authentication Procedure

The authentication procedures depend on system and operation. One of the examples is descried in this section.
Figure E.6 shows the authentication procedure. BS relays communication with MS and authentication server in order to perform authentication for the device. BS receives an authentication random number from authentication server and notifies the number to MS. MS then received the authentication demand message, performs authentication operation using the authentication random number, and notifies the result to BS. The authentication result received from MS is compared with the authentication value received from authentication server, and is used to judge the propriety of authentication. These rules depend on the authentication operation.

BS moves to next process, when authentication of MS is successful. BS releases the connection when authentication of MS is failed.

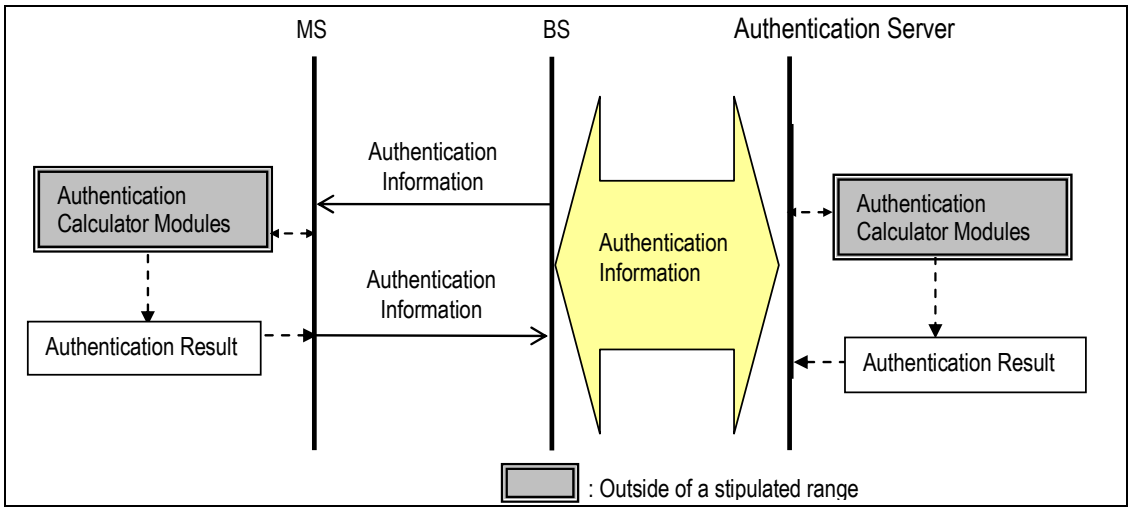

Figure E.6 Authentication Procedure

E.2.4.2 Authentication Timing

When MS performs location registration, incoming call, outgoing call and handover authentication is started by transmitting authentication demanded message from BS to network.
The authentication information transmitted by BS is exchanged between network and MS.

Appendix F: Improvement for CCH linkbudget

F.1 Overview

In this appendix, the improvement for a linkbudget of CCH, Dual CCH and CCH Continuation Transmission, is described with examples because their usage are depended on system. Either or both of these function can be used in same system.
Both of BS and MS can improve a linkbudget by receiving both CCH under this environment.

F.2 Dual CCH

Figure F.1 shows example for Dual CCH in case of allocated on each ends. their differences, the left side is CCH allocation in same slot, the other is CCH allocation in another slots. SCH number n is depended on System Bandwidth. Each CCH parameter should be same. This CCH allocation as SCH and slot is depended on system configuration.

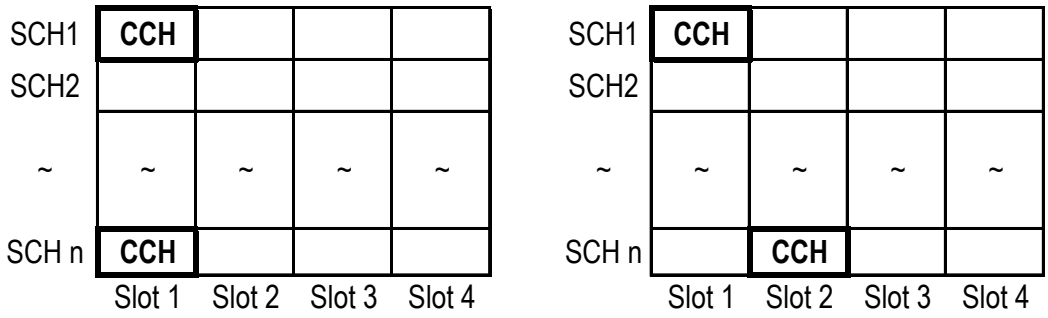

Figure F.1 Example allocations of Dual CCH

F.3 CCH Continuation Transmission

Figure F.2 shows example allocations of CCH Continuation Transmission. Two CCHs for Continuation Transmission are set in the figure. A linkbudget improves by increasing the number of their CCHs. This number is depended on system configuration.
Note that system should consider a compatibility between version 1 and 2 because the protocol version 1 does not support this function. Therefore, CCH allocation of version 1 and 2 should separate. This function applies only CCH allocation for protocol version 2. And their CCH should be also continuous allocation.

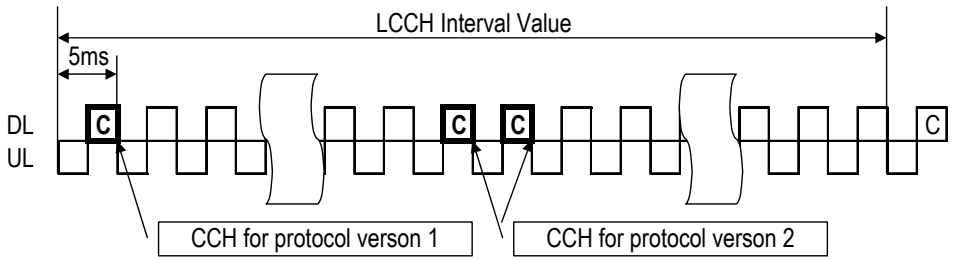

Figure F.2 Example allocations of CCH Continuation Transmission

Reference Document List

1-1: XGP Forum Document B-GN0.00-01-TS ”Public personal Handy–phone System : General Description”

Change History

Version	Date	History
Ver. 1.0	December 12th, 2007	Approved by the 68th ARIB Standard Assembly
Ver. 1.1	June 6th, 2008	Approved by the 70th ARIB Standard Assembly
Ver. 1.2	March 18th, 2009	Approved by the 73rd ARIB Standard Assembly
Ver. 1.3	December 16th, 2009	Approved by the 75th ARIB Standard Assembly
Ver. 2.0	July 7th, 2011	Approved by the 80th ARIB Standard Assembly
Ver. 2.1	February 14th, 2012	Approved by the 83rd ARIB Standard Assembly
Ver. 2.2	December 18th,2012	Approved by the 86th ARIB Standard Assembly
Ver. 3.0	July 3rd, 2013	Approved by the 88th ARIB Standard Assembly
Ver. 3.1	March 18th, 2014	Approved by the 91st ARIB Standard Assembly
Ver. 3.2	July 31st, 2014	Approved by the 92nd ARIB Standard Assembly
Ver. 3.3	March 18th, 2015	Approved by the 95th ARIB Standard Assembly

Change History List of Standards Ver.1.1

No.	Item No.	Title	Page	Change Summary
1	Attachment 2	List of Essential Industrial Property Rights	AT2-2,3	Addition of IPR list

Change History List of Standards Ver.1.2

No.	Item No.	Title	Page	Change Summary
1	Attachment 2	List of Essential Industrial Property Rights	AT2-4～6	Addition of IPR list
2	Reference	List of Essential Industrial Property Rights	AT2-7,8	Addition of IPR list

Change History List of Standards Ver.1.3

No.	Item No.	Title	Page	Change Summary
1	Attachment 2	List of Essential Industrial Property Rights	AT2-7	Addition of IPR list
2	Attachment 3	Next Generation PHS specifications	—	Full replacement. Correspond to the update of XGP Forum Technical Standard Ver.01 Rev 04.

Change History List of Standards Ver.2.0

No.	Item No.	Title	Page	Change Summary
1	Chapter 1	Chapter 1 General Descriptions	2	Revised. Correspond to the change of standard organization name and the update of XGP Forum Technical Standard Ver.02 Rev 02.
2	Chapter 2	Technical Requirements for Radio Facilities	3～19	Revised. Correspond to the revise of original Japanese regulation.
3	Chapter 3	Physical and MAC Layer Specifications	20	Revised. Correspond to the change of standard organization name and the update of XGP Forum Technical Standard

				Ver.02 Rev 02.
4	Chapter 4	Japanese specific matters	21	Revised. Correspond to the update of XGP
5	Chapter 5	Measurement Method	22	Revised. Correspond to the update of this standard version.
6	Attachment 2	List of Essential Industrial Property Rights	AT2-8	Addition of IPR list
7	Attachment 3	Next Generation PHS specifications	—	Full replacement. Correspond to the update of XGP Forum Technical Standard Ver.02 Rev 02.

Change History List of Standards Ver.2.1

No.	Item No.	Title	Page	Change Summary
1	Contents	Contents	ii	Revised. Correspond to the change of the name of the XGP Forum Specifications from "Next Generation PHS" to "XGP".
2	Chapter 1	General Descriptions	1, 2	
3	Chapter 2	Technical Requirements for Radio Facilities	3, 10	
4	Chapter 3	Physical and MAC Layer Specifications	20, 21	
5	Chapter 4	Japanese specific matters	22	Revised. Correspond to the update of XGP Forum Technical Standard Ver.02 Rev 03.
6	Attachment 2	List of Essential Industrial Property Rights	AT2-9～93	Addition of IPR list
7	Reference	List of Essential Industrial Property Rights	AT2-97～103	Addition of IPR list
8	Attachment 3	XGP specifications	—	Full replacement. Correspond to the update of XGP Forum Technical Standard Ver.02 Rev 03.

Change History List of Standards Ver.2.2

No.	Item No.	Title	Page	Change Summary
1	Contents	Front cover and Introduction	—	Revised. Correspond to the change of the name

				of this standard from “Next Generation PHS” to “XGP”.
2	Chapter 3	Physical and MAC Layer Specifications	20	Revised. Correspond to the update of XGP Forum Technical Standard Ver.02 Rev 04.
3	Attachment 2	List of Essential Industrial Property Rights	AT2-94～96	Addition of IPR list
4	Reference	List of Essential Industrial Property Rights	AT2-107	Addition of IPR list
5	Attachment 3	XGP specifications	－	Full replacement. Correspond to the update of XGP Forum Technical Standard Ver.02 Rev 04.

Change History List of Standards Ver.3.0

No.	Item No.	Title	Page	Change Summary
1	Chapter 2	Technical Requirements for Radio Facilities	3~19	Revised. Correspond to the revise of original Japanese regulation.
2	Attachment 2	List of Essential Industrial Property Rights	AT2-97～106	Addition of IPR list
3	Reference	List of Essential Industrial Property Rights	AT2-117～118	Addition of IPR list
4	Attachment 3	XGP specifications	－	Full replacement. Correspond to the update of XGP Forum Technical Standard Ver.03

Change History List of Standards Ver.3.1

No.	Item No.	Title	Page	Change Summary
1	Attachment 2	List of Essential Industrial Property Rights	AT2-107	Addition of IPR list
2	Reference	List of Essential Industrial Property Rights	AT2-120	Addition of IPR list

Change History List of Standards Ver.3.2

No.	Item No.	Title	Page	Change Summary
1	Chapter 2	Technical Requirements for Radio Facilities	3~23	Revised. Correspond to the revise of original Japanese regulation.
2	Attachment 2	List of Essential Industrial Property Rights	AT2-115	Addition of IPR list
3	Attachment 3	XGP specifications	—	Full replacement. Correspond to the update of XGP Forum Technical Standard Ver.03 Rev01

Change History List of Standards Ver.3.3

No.	Item No.	Title	Page	Change Summary
1	Attachment 2	List of Essential Industrial Property Rights	AT2-116	Addition of IPR list
2	Reference	List of Essential Industrial Property Rights	AT2-138	Addition of IPR list

OFDMA/TDMA TDD
Broadband Wireless Access System(XGP)

ARIB STANDARD

ARIB STD-T95 Version 3.3

Version 1.0	December	12th	2007
Version 1.1	June	6th	2008
Version 1.2	March	18th	2009
Version 1.3	December	16th	2009
Version 2.0	July	7th	2011
Version 2.1	February	14th	2012
Version 2.2	December	18th	2012
Version 3.0	July	3rd	2013
Version 3.1	March	18th	2014
Version 3.2	July	31st	2014
Version 3.3	March	17th	2015

Published by
Association of Radio Industries and Businesses

11F, Nittochi Building,
1-4-1 Kasumigaseki, Chiyoda-ku, Tokyo 100-0013, Japan
TEL 03-5510-8590
FAX 03-3592-1103

Printed in Japan
All rights reserved